PHOTOGRAPHY

THEORY AND PRACTICE

CLERC

EDITED BY

GEORGE BROWN, FIC., F.R.P.S.

PHOTOGRAPHY

CLERC

PITMAN

W. Stoddart

PHOTOGRAPHY

THEORY AND PRACTICE

PUBLISHED BY PITMAN

STUDIO PORTRAIT LIGHTING

By H. LAMBERT, F.R.P.S.

A valuable work by a well-known portrait photographer. The illustrations are an extremely helpful feature of the work, and the variety of articles taken under various forms of lighting are of real assistance to the reader. In each case the author explains how the result has been obtained.

In crown 4to, 92 pp., fully illustrated in photogravure and half-tone. **15s.** net. Second Edition.

COLOUR PHOTOGRAPHY

By ROBERT M. FANSTONE, A.R.P.S.
Being a new edition of the book written by the late
CAPT. OWEN WHEELER, F.R.P.S.

An up-to-date manual, describing colour photography in simple language, and providing a practical guide to colour processes for the amateur photographer with some experience of ordinary monochrome work, and for the young professional.

In demy 8vo, cloth gilt, 171 pp., with 12 plates showing the whole process of colour in detail. **12s. 6d.** net. Second Edition.

PHOTOGRAPHIC CHEMICALS AND CHEMISTRY

By J. SOUTHWORTH and T. L. J. BENTLEY, D.I.C., A.R.C.Sc.,
B.Sc. (Hons. Lond.)

The authors give a simple description of the principles of chemistry, and explain what takes place in the development, fixing, and after-treatment of photographic plates, films, and papers. A list is included giving a brief description of all the chemicals likely to be met with.

In crown 8vo, cloth gilt, 124 pp. **3s. 6d.** net.

TELEPHOTOGRAPHY

With Special Reference to the Choice and Use of the Telephoto Lenses in Connection with Photographic and Cinematograph Cameras Employing 8 mm., 9½ mm., 16 mm., and 35 mm. Film.

By CYRIL F. LAN-DAVIS, F.R.P.S.
Fourth Edition by H. A. CARTER, F.R.P.S.

A textbook for both professional and amateur photographers who wish to understand the many ways in which the telephoto lens will enable them to extend the range and scope of their photographic work.

In crown 8vo, 117 pp., illustrated. **3s. 6d.** net.

RETOUCHING AND FINISHING FOR PHOTOGRAPHERS

By J. SPENCER ADAMSON

This book is written for professional photographers and keen amateurs who wish to know the latest methods and processes which are available for the retouching of photographic negatives and prints.

In demy 8vo, 137 pp., with 8 full-page plates and 16 other illustrations. **4s.** net. Third Edition.

CAMERA LENSES

By A. W. LOCKETT, *Hons. Silver Medallist, City and Guilds*

Intended for all serious amateurs, and also for professional photographers. After a simple treatment of the principles involved, practically every type of camera lens now available is described. A study of this book will enable the photographer to select the most suitable lens or lenses for any class of work.

In crown 8vo, 108 pp., with 100 illustrations. **2s. 6d.** net.

(A) Taken on Ilford Panchromatic Plate

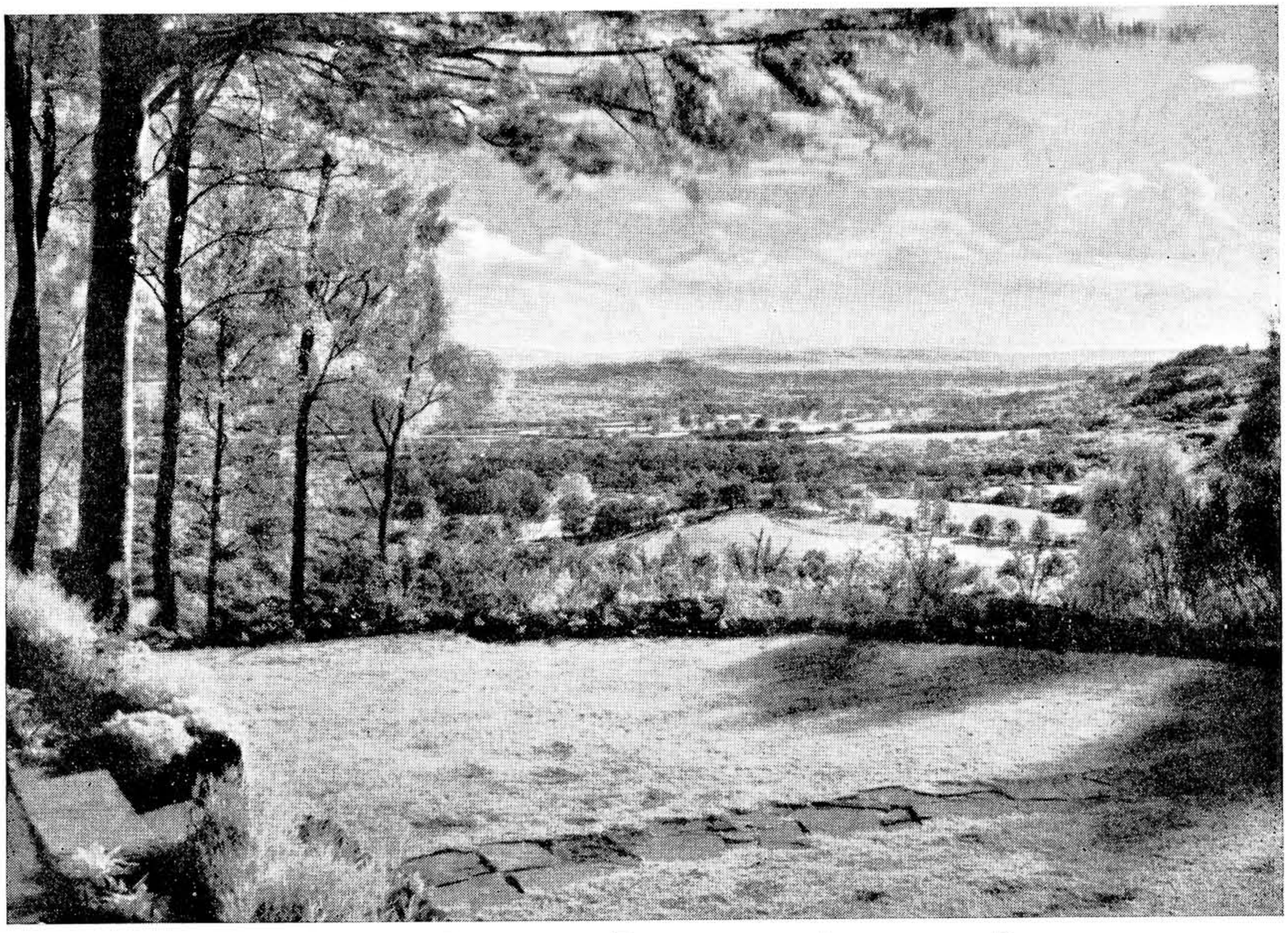

(B) Taken on Infra-red Plate, with Infra-red Filter

VIEW FROM MARLEY, SUSSEX

Originals by courtesy of Ilford Ltd.

PHOTOGRAPHY

THEORY AND PRACTICE

BEING AN ENGLISH EDITION
OF
"LA TECHNIQUE PHOTOGRAPHIQUE"

BY

L. P. CLERC, Hon. F.R.P.S.

EDITED BY
THE LATE
GEORGE E. BROWN, F.I.C., Hon.F.R.P.S.
OFFICIER D'ACADÉMIE
EDITOR OF
THE "BRITISH JOURNAL OF PHOTOGRAPHY"

SECOND EDITION

SIR ISAAC PITMAN & SONS, LTD.
PARKER ST., KINGSWAY, W.C 2
BATH, MELBOURNE, TORONTO, NEW YORK

HENRY GREENWOOD & CO., LTD.
24 WELLINGTON STREET
LONDON, ENGLAND

1937

First Edition, 1930
Second Edition, 1937

SIR ISAAC PITMAN & SONS, LTD.
PITMAN HOUSE, PARKER STREET, KINGSWAY, LONDON W.C.2
THE PITMAN PRESS, BATH
PITMAN HOUSE, LITTLE COLLINS STREET, MELBOURNE

ASSOCIATED COMPANIES
PITMAN PUBLISHING CORPORATION
2 WEST 45TH STREET, NEW YORK
205 WEST MONROE STREET, CHICAGO
SIR ISAAC PITMAN & SONS (CANADA), LTD.
(INCORPORATING THE COMMERCIAL TEXT BOOK COMPANY)
PITMAN HOUSE, 381–383 CHURCH STREET, TORONTO

MADE IN GREAT BRITAIN AT THE PITMAN PRESS, BATH
C7—(T.5630)

PREFACE

TO THE SECOND EDITION

OPPORTUNITY has been taken in preparing the second English edition of this book to bring it into line with the second French edition (1934) of *La Technique Photographique*, and to incorporate such further revision as has been necessitated by the considerable advances in photographic technique, which have been made since the appearance of that volume. At the same time certain ambiguities in translation which became apparent in the first English edition have been adjusted, and matter which had become out of date was either cut out altogether, or very considerably compressed.

PREFACE

To inveigh against theory, even in the most elementary arts, proves only the ignorance of the inveigher. It is not the profoundness of the theory, but its imperfections, that should be blamed for the ill effects that so often follow its working out in practice. . . . Many data regarding the needs to be satisfied, the means of satisfying them, the time and expenditure involved, that are perforce ignored within the field of mere theory, come into the problem of working out a practical application. By bringing these factors into play with the skill that marks practical genius, it is possible both to extend the narrow limits within which prejudices against theorizing tend to confine the arts, and to guard against the mistakes to which an unskilful use of a particular theory may give rise.

—CONDORCET (*Tableau des Progrès de l'Esprit humain*, 1793)

THIS book does not represent an attempt to compile an encyclopaedia, a work of a kind which is always loaded with descriptions of obsolete methods and appliances and the details of numerous applications of interest only to a few technical people. The author's aim has been to bring into one volume as complete a treatise as possible on modern working methods and apparatus in conjunction with the minimum of theoretical considerations which he considers necessary for their proper understanding.

The beginner is recommended to study at first the parts of practical instruction which he requires, and to postpone a reading of the whole work until he has acquired some practical experience. In the interval he can make use of the book in the manner of a dictionary, by aid of the full alphabetical index at the end.

Objection may be taken to the absence of bibliographical references. But such references would have been exceedingly numerous and would have added considerably to the already large number of pages without much advantage to most readers. Therefore the references have been confined to a mention of the names of the authors (and dates) of various discoveries, improvements, and experiments, a plan which at any rate will serve to narrow down the scope of any bibliographical search which some readers may wish to carry out.

The author's professional duties for thirty years past have rendered it necessary for him to read nearly everything which has been published on photography in the technical journals of the chief countries of the world, and to experiment or supervise experiments in regard to a large number of the data thus collected. In

a certain measure therefore this work may be considered the work of all; and the author would excuse himself to experimenters and writers whose ideas and recommendations have been mentioned, possibly without acknowledgment.

Since the publication in 1926 of the original French edition, the author has made a considerable number of additions and corrections which are embodied in the present English translation.

The author desires to express to the translators and editor of this volume his sincere thanks for the evident care with which their work has been done. Their critical comments have enabled the author to correct several errors in the original edition.

L. P. C.

CONTENTS

PAGE

PREFACE V

PART 1

INTRODUCTION: VISION AND PHOTOGRAPHY

CHAPTER I

LIGHT AND COLOUR 1

White light—Light-waves—Wavelength—Luminosity of different spectral colours—The ultra-violet and the infra-red—Natural and pigmentary colours—Absorption by coloured media—Sources of artificial light

CHAPTER II

QUANTITY OF LIGHT 7

Intensity and brightness—Illumination

CHAPTER III

LIMITS OF LUMINOSITY IN PHOTOGRAPHIC SUBJECTS 8

Sensitivity of the eye—Perception of details of luminosity

CHAPTER IV

PHOTOGRAPHIC IMAGES: THE IDEAL SCIENTIFIC IMAGE: THE AESTHETIC IMAGE . 10

Negative and positive—Range of extreme luminosities in a positive—The ideal scientific reproduction—The aesthetic image

CHAPTER V

PERSPECTIVE: MONOCULAR AND BINOCULAR VISION 12

Geometrical perspective—Deformations due to displacement of the viewpoint—Normal distance of vision and angle of visual field—Anomalies of an exact perspective—Influence of choice of viewpoint—Binocular vision—Perspective on a non-vertical plane—Panoramic perspective—Depth of field

PART 2

THE OPTICAL IMAGE BEFORE PHOTOGRAPHIC RECORDING

CHAPTER VI

THE CAMERA OBSCURA AND PINHOLE PHOTOGRAPHY 20

Pinhole photography—Making a pinhole

CHAPTER VII

GENERAL PROPERTIES OF OPTICAL SYSTEMS: ABERRATIONS 23

Lenses—Images formed by convergent lenses—Real images—Virtual images—Optical centre—Nodal points—Chromatic and spherical aberration—Astigmatism—Tangential and radial images—Coma—Curvature of field—Distortion—Distribution of light in the field—Field illuminated—Field covered—Effect of internal reflection—Stereoscopic effects

CHAPTER VIII

PAGE

FOCAL LENGTH OF LENSES: SCALE OF IMAGE: CONJUGATE POINTS . . . 38

Relations between the size of object and image—Experimental determination of the focal length of a lens—Automatic adjustment of object and image

CHAPTER IX

DIAPHRAGMS AND RELATIVE APERTURE: EFFECT ON PERSPECTIVE AND INTENSITY 46

Different types of diaphragms—Pupils of an optical system—Photographic perspective—Depth of field—Hyperfocal distance—Influence of the corrections of the lens on the depth of field and hyperfocal distance—Fixed-focus cameras—Focussing scales—Different systems of numbering diaphragms—Measurement of the effective aperture of a diaphragm

CHAPTER X

CHOICE OF LENS: TESTING: CARE OF LENSES 61

Lens names—Single lenses—Petzval portrait lens—Rectilinear lenses—Wide-angle rectilinears—Anachromatic symmetrical lens—Antiplanats—The first anastigmats—Convertible and unconvertible anastigmats—The Hypergon wide-angle lens—Variable-power telephotos—Fixed-focus telephotos—Anachromatic telephotos—Sets of lenses—Different types of lens mounts—Choice of a focal length—Practical testing of lenses—Preservation and care of lenses

CHAPTER XI

LENS ACCESSORIES: SUPPLEMENTARY LENSES, LIGHT-FILTERS, PRISMS AND MIRRORS, LENS HOODS, SKY SHADES 77

Supplementary lenses—Tele-attachments—Light-filters—Prisms and mirrors—Polarizers—Lens hoods—Skyshades—Soft focus attachments

CHAPTER XII

SHUTTERS 87

Different positions for the shutter—Efficiency of a shutter—Desirable characteristics of a shutter—Roller-blind shutters—Flap shutters—Diaphragm shutters—Focal plane shutters—Practical rules for the use of focal plane shutters—Shutter testing—Shutter releases

CHAPTER XIII

STAND CAMERAS: COMMERCIAL, PROFESSIONAL, AND SEMI-PROFESSIONAL . . 106

Names and functions of the parts of a camera—Cameras for commercial copying—Studio portrait cameras—Portable stand cameras—Tripod stands—Hand-stand cameras—Cameras for " while-you-wait " photography—Testing of cameras

CHAPTER XIV

HAND CAMERAS 115

Miniature cameras—Rigid cameras—Folding cameras—Focussing of hand cameras—Ground-glass finders—The brilliant erecting finder—Direct-vision brilliant finders—Telemetric finders—Levels and plumbs—Safety devices—Reflex cameras—Sensitive material—Single metal slides—Changing boxes for plates—Roll-film cameras—Film packs—Tripods and pocket-supports for hand cameras—Tests of a hand camera

PART 3
PRODUCTION OF NEGATIVES

CHAPTER XV

THE NEGATIVE: GENERAL REMARKS ON PHOTOGRAPHIC NEGATIVE PROCESSES . 130

The wet collodion process—The gelatino-bromide process

CHAPTER XVI

PAGE

PREPARATION AND PROPERTIES OF NEGATIVES: GELATINO-BROMIDE EMULSIONS . 132

Preparation of emulsions—The sensitive emulsion—The latent image—Different actions on the photographic emulsion—The law of density—Measures of sensitivity—Reversal and solarization—The accuracy of photographic images

CHAPTER XVII

CHROMATIC SENSITIVITY, ORTHOCHROMATISM AND INFRA-RED PHOTOGRAPHY . . 144

Action of different spectral radiations on gelatino-bromide emulsions—Yellow filters—The factors of a colour filter—Experimental determination of the factors—Self-screened orthochromatic emulsions—Orthochromatism in practice—Photography of colour objects—Photography with infra-red rays—Colour-sensitizing

CHAPTER XVIII

PLATES, FILMS, AND NEGATIVE PAPERS 157

Supports of sensitive coatings—Flexible supports—Halation—Prevention of halation—Photographic plates—Photographic film—Relative merits of plates and films

CHAPTER XIX

NON-ACTINIC LIGHTING: DARK-ROOM LAMPS AND SAFELIGHTS. . . . 166

Choice of dark-room illumination—Light-sources—Testing of safelights—Preparation of safelights

CHAPTER XX

EQUIPMENT OF THE DARK-ROOM 172

The amateur's dark-room—Public dark-rooms—Construction of the ideal professional dark-room—Passages—Ventilation—Heating—Sinks—White light in the dark-room

CHAPTER XXI

DARK-ROOM ACCESSORIES 177

Tanks and dishes—Material for tanks, hangers, and dishes—Glass-ware—Cleaning of utensils

CHAPTER XXII

CHEMICALS: PREPARATION OF SOLUTIONS 182

Choice of chemicals—Unstable substances—Storage of chemicals—Labelling of jars and bottles—Preparation of photographic baths—Filtration—Stock solutions—Solutions, concentration, solubility, saturation—Water used in the preparation of baths—Commercial preparations

CHAPTER XXIII

HANDLING OF SENSITIVE MATERIALS: LOADING AND UNLOADING OF DARK SLIDES: REPACKING 188

Storage of sensitive materials—Dusting the sensitive surface—Identification of negatives—Unloading the dark slides

CHAPTER XXIV

LIGHTING OF THE SUBJECT: DAYLIGHT: ARTIFICIAL LIGHT 192

Daylight—Arc lamps—Incandescent lamps—Mercury-vapour lamps—Illumination of flat originals—Illumination by magnesium—Flash lamps—Flash powders

CHAPTER XXV

FOCUSSING OF THE IMAGE AND THE POSITION OF THE SUBJECT ON THE PLATE . 205

Focussing—Soft focus—Soft-focus negatives—Correction of focus with anachromatic lenses—Superimposed plates—Soft-focus printing—Choice of viewpoint

CHAPTER XXVI

PAGE

EXPOSURE 211

Time of exposure—Results of errors in exposure—Factors affecting time of exposure—Influence of relative displacements of the subject and of the camera—Instantaneous and time exposures —Actinometers—Photo-electric exposure-meters—Photometers—Exposure tables

CHAPTER XXVII

DESENSITIZING OF PHOTOGRAPHIC EMULSIONS 222

Use of coloured developers—Loss in sensitivity of emulsions impregnated with developer—Desensitizers—Practical methods of desensitizing

CHAPTER XXVIII

THE DEVELOPMENT OF THE NEGATIVE 226

Chemical development—Theory of development—Effect of dissolved bromide in the developing solution—Chemical fog—Effect of dilution of the developer—Effect of the temperature of the developing solution—The arithmetical coefficient of a developing solution—Mineral salts as developers—Ferrous oxalate developer—The developing function—Normal constituents of a developer—Mixture and oxidation products of developers—Rôle of sulphite—Rôle of the alkalis—Effect of soluble iodides—Use of various neutral salts—Organic developers—Polyphenol developers—Amidophenol developers—Amidol—Addition products of developers—Paraphenylenediamine—Sulphites, bisulphites, and metabisulphites—Alkalis and their substitutes—Practical equivalence of the usual alkalis—Alkali bromides—Wetting plates and films before development—Immersion in the developing bath—Local development—Factors influencing the duration of development—Judging the end of development—Critical examination of finished negatives—Exhaustion and maintenance of the developer—Developer stains on hands and clothes—Formulae for developers—Rapid or slow development—Fine-grain developers—Rational automatic development—Development by visual inspection of the image —Development in several successive baths—Tentative development—Development in tropical climates—Combined developing and fixing—Method for the comparative testing of two developers—Physical development before fixing—Physical development after fixing

CHAPTER XXIX

FIXATION 270

The purpose of fixation—Solvents of the silver halides—Hyposulphite of soda—The chemistry of fixation—The mechanism of fixation—Additions to fixing baths—The chemistry of fixation in presence of alum—Fixing capacity of hyposulphite for silver halides—Speed of fixation—Fixation in two successive baths—Choice of the best concentration of fixer—Tests for exhausted fixer—Preparation of fixing baths—Fixation in practice—Recovery of silver from exhausted fixing solutions

CHAPTER XXX

WASHING 283

The function of washing—The mechanism of washing in several changes and in running water—Apparatus for washing—Control of washing—Washing in practice—Hypo eliminators

CHAPTER XXXI

DRYING 289

The purpose of drying—The physics of drying—Apparatus for drying—The operation of drying —Distortion of the image during drying—Rapid drying with a volatile liquid—Instantaneous drying by dehydration of the gelatine

CHAPTER XXXII

THE CHIEF FAILURES IN NEGATIVE-MAKING 294

Faults appearing during development and after fixing—Dichroic fog—Defects occurring during washing—Defects appearing during or after drying—Defects occurring in a negative after drying

CHAPTER XXXIII

PAGE

REVERSAL PROCESS: METHODS FOR OBTAINING DIRECT POSITIVES . . . 301

General considerations—Reversal by a second, determined exposure—Reversal by total blackening of the residual silver bromide—Reversal by means of residual silver bromide of which the excess is dissolved to a determined degree—Other methods

CHAPTER XXXIV

METHODS OF AFTER-TREATMENT: INTENSIFICATION, REDUCTION, WORKING-UP, RETOUCHING 306

Choice of method of intensification—Mercury intensification in two successive baths—Chromium intensification—Intensification with copper and silver—Choice of a reducer—Surface reducers—Farmer's reducer—Permanganate reducer—Proportional reducers—Ammonium persulphate super-proportional reducer—Indirect reduction of heavier densities—Local intensification and reduction with a brush—Local tinting of the gelatine—Local abrasion of the negative—Work on the back of a negative—Reduction of contrasts by soft positive—Blocking-out—Spotting—The purpose of retouching—Retouching appliances—Technique of retouching—Added backgrounds

CHAPTER XXXV

VARNISHING, STRIPPING, NUMBERING, CLASSIFICATION, AND STORAGE OF NEGATIVES 323

Preparation of varnishes—Application of the varnish—De-varnishing of negatives—Oiling of paper negatives—Stripping glass negatives—Stripping film negatives—Transfer of the film to a new support—Removal of films from waste glass and celluloid negatives—Classification of negatives—Storage of negatives

PART 4
PRINTING PROCESSES

CHAPTER XXXVI

PRINTING PAPERS AND PRINTING METHODS 330

The principal printing processes—Supports for the photographic image—Photographic papers—Positive plates—Positive films—Colour of image and of base—The gradation of a sensitive paper—Printing frames and machines—Actinometers and light-integrators—Effect of illumination on gradation—Effect of colour of the printing light on contrast—Calibration of negatives—Modes of printing—Printing with masks—Printing with a tinted border—Vignetting—Local control during printing—Reducing contrast and definition—Combination prints—Adding a sky to a landscape—General hints

CHAPTER XXXVII

SILVER PRINT-OUT PAPERS 346

Deterioration of print-out papers—Salted paper—Albumenized papers—Sensitizing silk—Print-out silver emulsions—Use of collodion and gelatine P.O.P.—The printing room—Gold toning in alkaline baths—Sulphocyanide toning—Thio-urea toning—Platinum toning—Combined toning and fixing—Reactions in combined toning and fixing baths—Preparation and use of combined toning and fixing solutions—Development of part-exposed prints—Types of self-toning papers—Working methods

CHAPTER XXXVIII

PAGE

PAPERS, PLATES, AND FILMS FOR POSITIVE PRINTS BY DEVELOPMENT . . 358

Different kinds of emulsion and their characteristic qualities—Abrasion—Manipulation of printing papers before exposure to light—Exposure—Soaking before development—Development—Developers for positives—Stopping development with an acid bath—Non-actinic light—Developers for bromide papers—Development of transparencies—Making of duplicates—Gaslight papers—Developers for gaslight papers—Method of development—Transparencies—Warm tones by development—Exposure—Warm tones on black-tone plates—Chloro-bromide papers for warm tones—Fixing developed images—Intensification—Reduction—Sulphide toning—Bleaching for sulphide toning—Direct sulphiding with hypo-alum—Single-solution sulphiding with polysulphides—Gold toning—Toning with selenium—Toning by the formation of coloured ferrocyanides—Uranium copper and iron toning—Dye-toning—Mordanting the images—Dyeing of mordanted transparencies—Tinting

CHAPTER XXXIX

WASHING, DRYING, AND GLAZING OF PAPER PRINTS 391

Methods of washing papers—Apparatus for washing prints—Drying of paper prints—Rapid drying of prints—Deformation of the image during washing and drying—Glazing and enamelling of prints—Facing the prints with cellophane

CHAPTER XL

THE PRINCIPAL FAILURES IN MAKING PRINTS OF POSITIVES ON SILVER PAPERS . 397

Failures common to various printing processes—Failures with print-out papers—Failures with development papers—Failures in sulphide toning

CHAPTER XLI

PRINTING PROCESSES BASED ON THE SENSITIVITY OF IRON SALTS . . . 402

The ferro-prussiate process—Industrial papers for copying tracings—True-to-scale process—Printing on ferro-prussiate paper from ordinary negatives—Cyanotype paper—Ferro-gallic papers—Silver-iron printing papers—Sepia photo-copying papers—Kallitype and imitation platinum papers—Platinum-iron printing papers—Use of black-tone platinum papers—Sensitizing papers for platinum printing—Recovery of platinum residues

CHAPTER XLII

PIGMENT PROCESSES 413

The carbon process—Action of light on bichromated gelatine—Chromates and bichromates—Physiological action of bichromates—Transfer of the film—Preparation of carbon tissue—Sensitizing and exposing carbon tissue—Drying the sensitized tissue—Preparation of the negatives—Exposure to light—Development of tissue by single transfer—Development—Transparencies and positives—Intensification and toning of images on an impervious support—Development of tissue by double transfer—Preparation of the temporary support—Development—Preparation of the final support—Final transfer—Retouching and coloring—Carbon printing without transfer—The Artigue and Fresson processes—Papers exposed through the back—The gum-bichromate process and its variations—Coating the pigmented gum—Exposure and development—Multiple printing—Commercial gum-bichromate papers—Bichromated papers—Prints by dyeing films of bichromated gelatine—Imbibition without development—Dyeing of gelatine reliefs—Dusting-on processes—Direct reproductions by the powder process—Resinopigmentype—Colour process—Prints in greasy inks on bichromated gelatine—Materials and apparatus—Sensitizing and exposure to light—Washing, swelling, and drying—Inking the print—Special instructions for obtaining prints by transfer—Papers for transfer printing——Transfer without press—Ozotype—Dye prints by photo-mordants—Dye prints with diazo compounds—Other processes

CHAPTER XLIII

PIGMENT PRINTS FROM SILVER PRINTS 445

The Carbro or Ozobrome process—Theory of the Carbro process—The Bromoil process—The bromide print—Bleaching the image—Swelling of the image—Inking

CHAPTER XLIV

FINISHING AND WORKING-UP PRINTS: TRIMMING, MOUNTING, RETOUCHING, AND COLOURING . . . . . PAGE 450

How much to trim—Choice of mounts—Placing the picture on the mount—Various methods of fixing the print on the mount—Mountants—Full mounting—Burnishing—Dry-mounting—Waxing and varnishing prints—Embossing prints—Outline photographs on wood—Combination photographs—Spotting—Retouching of prints—Use of the air-brush—Retouching of commercial photographs for photo-mechanical reproduction—Coloured photographs—Colouring with dyes—Water-colouring—Pastel colours—Oil-painting and its variations—Framing photographs

PART 5
SPECIAL TECHNIQUES

CHAPTER XLV

COPYING: RESTORATIONS TO THE VERTICAL: DEFORMATIONS 466

Contact printing—Use of reflected light—Copying with a camera—Factors affecting sharpness—Sensitive materials—Texture of the original print—Lighting for copying—Examination of documents—Cylindrical surface copied in strips—Anamorphoses—Caricature deformations

CHAPTER XLVI

ENLARGEMENTS 474

Condensed and diffused light—The negative—Condensers—Light-source—Vertical enlargers—Focussing the picture—Soft-focus effect—Exposure—Control—Enlarged paper negatives—Large-scale work

CHAPTER XLVII

LANTERN WORK 490

Photographic lantern slides—Diagram and notice slides—Binding lantern slides—Storing and carrying—Projection lanterns—The light-box—Paraffin oil lamps with multiple wicks—Acetylene burners—Oxy-acetylene limelight—Precautions to be taken in the manipulation of oxygen cylinders—Electric light—The condenser—Slide carriers—Projection lenses—Cooling devices—Opaque objects—Lantern screens—Opaque diffusing screens—Translucent screens—Daylight screens—The lantern lecture—Illumination of the hall—Centring the light source—Arrangement of slides

CHAPTER XLVIII

STEREOSCOPY 506

The sensation of relief—Stereoscopic photographs—Stereoscopic transposition—Planoscopic pairs—Geometrical considerations—Parallax—Range of stereoscopic vision—Examination of stereograms—Stereoscopes with convergent eyepieces—Complementary stereoscope—Masking—Transparencies—Projection

CHAPTER XLIX

COLOUR PHOTOGRAPHY 533

Trichromatic selection—Additive synthesis—Three-colour filters—Triple projection—Chromoscopes—Lenticular colour photography—Three-colour transparencies and prints—Kodachrome film—Colour-screen plates and films—Autochrome plates and films—The Dufaycolor process—Colour separation negatives from colour-screen transparencies

CHAPTER L

AN OUTLINE OF CINEMATOGRAPHY 552

Ciné film—Ciné cameras—Drying film—Titling—Printing positives—Projection—Stroboscopic illusions

CHAPTER LI

PAGE

PHOTO-MECHANICAL PROCESSES IN BRIEF 558
Line etching—Half-tone—Collotype—Photo-lithography—Photogravure—Colour prints

CHAPTER LII

GENERAL PRINCIPLES OF RADIOGRAPHY 563
Properties of X-rays—Protection—Radiographic images—Intensifying screens—Exposure—Printing positives

APPENDIX: A CHRONOLOGY OF PHOTOGRAPHY 571

INDEX 575

INSET PLATE

VIEW FROM MARLEY, SUSSEX—(A) TAKEN ON PANCHROMATIC PLATE
(B) TAKEN ON INFRA-RED PLATE . . *Frontispiece*

CONTRACTIONS

A.U. . .	Angström unit (§ 2)	mm. . .	millimetre
B. . .	degree Baumé hydrometer	F. . .	degree Fahrenheit
m. . .	metre	grm. . .	gramme
C. . .	degree Centigrade	gr. . .	grain
c.c. . .	cubic centimetre*	min. . .	minim
cm. . .	centimetre	oz. . .	ounce
drm. . .	dram		

* The term "cubic centimetre" is used in preference to "millilitre" throughout the text. In practice, the difference between the two measures is so small as to be negligible.

PHOTOGRAPHY

THEORY AND PRACTICE

PART I

INTRODUCTION: VISION AND PHOTOGRAPHY

CHAPTER I

LIGHT AND COLOUR

1. White Light. When a beam of daylight, which we call *white* light, in spite of the fact that its quality is continually changing,[1] is decomposed, e.g. by passing it through a glass prism which separates it into the constituent elements of the incident light, the colours of the rainbow may be seen in their normal order. By using suitable apparatus, described in all books on optics, a pure *spectrum* can be obtained consisting of an infinite number of images of a fine slit, each image being formed by one of the *elementary radiations* which go to make up the light by which the slit is illuminated.

Though there are an infinite number of colours in the spectrum, it is usual to divide them into groups, in each of which the eye experiences sensations which differ little from one another. For reasons as arbitrary as those which formerly caused the number of days in the week, or the wonders of the world to be fixed at seven, the number of spectral colours has also been fixed at seven, and a bad alexandrine of the Abbé Delisle—

Violet, Indigo, Blue, Green, Yellow, Orange, and Red

has contributed quite appreciably to keeping alive this unfortunate tradition, from which most exaggerated conclusions have often been drawn.

Examination of the colours of the rainbow or of a slightly dispersed *normal spectrum*[2] shows that the spectrum may be divided into three chief regions of equal extent, the blue-violet, green, and vermilion-red, in each of which the variation of tint is almost imperceptible. Between these large regions there are narrow transition regions where the variation of colour is very rapid, one being a blue-greenish colour between the blue-violet and the green; the other, yellow between the green and the red. For most practical purposes it is sufficient to consider the three main regions into which the spectrum may, roughly speaking, be equally divided. Thus, if the spectrum is to be considered as divided into more than five regions (the three principal and the two transition regions), then one ought to speak of an *infinite* number of colours rather than only seven.

2. Light Waves—Wave-length. As the colours are infinite in number, obviously it is impossible to name them all accurately by words, and it is necessary to use numbers. Spectral radiations are universally specified by their *wave-lengths*.

This numeration of colours, independent of any arbitrary convention, was made possible when the researches of Young and Fresnel proved that light is the propagation of a periodic vibration, which may be compared (provided the comparison is not pushed too far) to the propagation of sound (sound waves), or to the propagation of waves created on the surface of smooth water by the falling of a stone, or even to the course of a person walking in a straight line with a uniform velocity and a regular step. Without attempting here any justification of this wave theory, one may mention, however, amongst the numerous facts which may be quoted in support of it, the coloration of thin films (soap bubbles) and the direct process of colour photography due to G. Lippmann (interference method).

In all cases of the propagation of a periodic phenomenon there are three quantities involved: the *velocity* of propagation, the *time of one period* (or its reciprocal, the *frequency*), and the " step "

[1] Daylight nearly always shows some colour which is in excess of its average composition, and which varies with atmospheric conditions, time of day, and, to some extent also, with geographical latitude and with altitude. Light diffused by a lightly clouded sky is bluish; while direct sunshine is yellowish, changing to red at sunset.

[2] Spectrum as formed by passing the light through a grating, i.e. a system of parallel equidistant lines generally about 600 per millimetre (15,240 per inch), instead of through a prism.

or *wave-length*, which are connected by the relations—

$$\text{Wave-length} = \text{velocity} \times \text{time of one period}$$
$$= \frac{\text{velocity}}{\text{frequency}}.$$

The velocity of light in air is approximately 187,000 miles per second, and is the same for all radiations.

While the *pitch* of a note is always characterized by its frequency, radiations are always denoted by their wave-length (sometimes represented by the Greek letter λ, *lambda*), which is the distance from crest to crest of two successive waves, measured generally in ten-millionths of a millimetre, that is, in Angström units (A.U.).

Expressed thus, the wave-lengths of visible radiations extend between 4,000 for the extreme violet and 7,000 for the extreme, easily visible red (with special precautions, trained observers have been able to see as far as 8,000).[1] Fig. 1 represents the distribution of wave-lengths between the different colours in a normal spectrum, the wave-length scale being equally graduated throughout. In the figure are also marked the positions of the black bands of the solar spectrum, called the Fraunhofer lines, denoted by the letters *A* to *H*, and constituting a series of reference marks which are sometimes used to denote the different spectral regions in cases where extreme precision is unnecessary. The frequency (number of waves per second) is constant for each radiation, irrespective of the medium, and is approximately expressed for yellow light by the figure 5, followed by 14 zeros. These numbers are not, as might be thought, simply theoretical speculations, but the expression of practical measurements; the wave-length is frequently used as a measure of length in precision work and even in certain industrial measurements.

3. Luminosity of Different Spectral Colours. For an observer who is not colour-blind (people who are colour-blind cannot perceive certain colours; they generally confuse red and green), the region which appears the most luminous in the normal spectrum of white light is the green. At high luminous intensities the maximum of luminosity is at 5,500 A.U. (yellow-green); at very weak illuminations the red, which normally is more luminous than the blue, begins to fade sooner than the blue, the sensation of colour disappears almost completely, and the maximum of luminosity approaches continually closer to 5,300 A.U. (blue-green). This effect, known as the *Purkinje phenomenon*, is, as we shall see presently, of special interest in regard to the choice of illuminants for the dark-room.

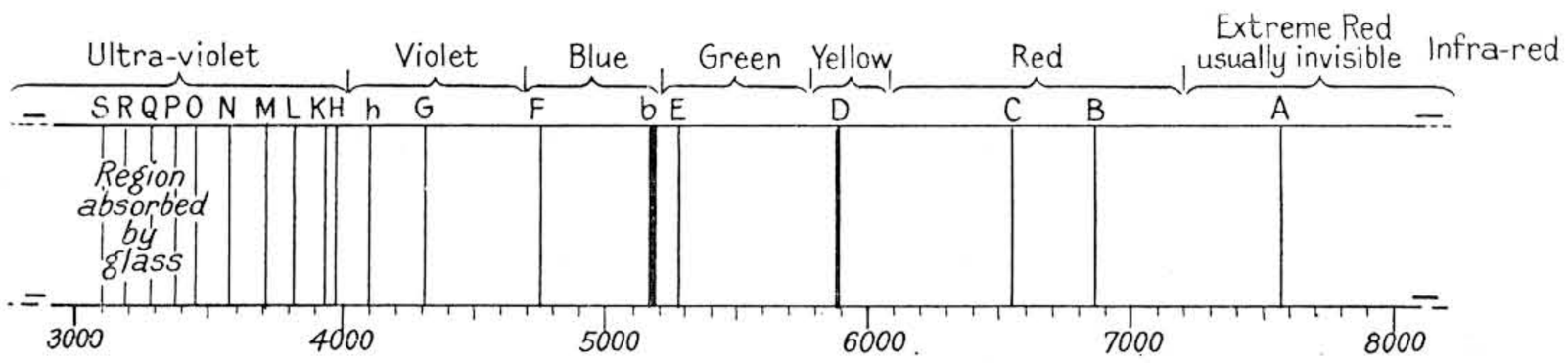

FIG. 1. DISTRIBUTION OF RAYS IN THE SOLAR SPECTRUM

About 95 per cent of the visual effect of the spectrum is confined between the lines *C* and *F*, whilst photographic action on ordinary emulsions is limited only to those radiations of wavelength less than that of the *F* line. This peculiarity has important consequences in the photographic rendering of different colours.

4. The Ultra-violet and the Infra-red. The radiant energy of the sun and various artificial illuminants is not limited to the visible region of the spectrum, but covers a range, which is actually known, of at least 15 octaves.

If, in the region beyond the spectrum violet, pieces of paper impregnated with fluorescein or rhodamine (*fluorescent substances*) are placed, it will be seen that they emit respectively green and red light. This effect they also show in the blue-violet but not to such an easily observable extent. The same phenomenon can be shown with crystals of uranium nitrate, with screens covered with barium platinocyanide (used in radioscopy), calcium tungstate (X-ray intensifying screens), or certain preparations of zinc sulphide. In order to demonstrate the existence of these invisible radiations a spectrum need not necessarily be used. By projecting on to a screen the image of an electric arc and then placing in the path of the beam a piece of special black glass (Wood's glass) which absorbs all the visible light whilst transmitting the ultra-

[1] Note that the interval between the extreme visible radiations is less than a musical octave.

violet, the image of the arc can be made to re-appear by placing at the point where the visible image existed one of the fluorescent screens mentioned above.

The glasses generally employed in the construction of optical instruments transmit the ultra-violet down to about 3,500 A.U. The limit extends further to about 3,200 A.U. in the case of certain special glasses (*Uviol*). Thanks to the absorption of our atmosphere, the solar spectrum ends at about 3,000 A.U., which fact protects us from the very dangerous physiological effects of the shortest wave-length radiations such as are produced by arcs between metal electrodes and transmitted by quartz (rock crystal) down to about 2,000 A.U., which is also approximately the limit of transparency of gelatine and air. By means of suitable apparatus (reflection gratings in vacuum), and by using sensitive surfaces without gelatine, it has been possible to study photographically the ultra-violet down to about 100 A.U., where it joins the X-rays.

Quartz lenses, used in conjunction with filters which transmit only ultra-violet, are employed in certain special applications of photography. A filter suitable for this purpose is a thin film of silver.

In photographs obtained with these radiations alone, glass objects appear completely opaque; certain white flowers and pigments are indistinguishable from pure blacks, and, further, no background and no shadows appear in a landscape photographed in bright sunshine. The photograph looks as if it were taken in a dense fog (R. W. Wood, 1910).

The infra-red, which extends the visible spectrum beyond red, was of no photographic interest for a long time, its effects being chiefly thermal. The only known means for infra-red photography was an indirect method based on the fact that these radiations discharge almost instantaneously *phosphorescent* bodies. By uniformly exciting a phosphorescent screen by ultra-violet, forming on it an infra-red image and then applying it against a sensitive layer, a positive image (§18) is impressed by the residual phosphorescence.

Since the discovery of sensitizers (§223) for infra-red which are sufficiently easy to handle (E. Q. Adams and H. L. Haller, 1919; H. T. Clarke, 1925), it has been possible to place on the market plates and films for infra-red photography up to 10,000 or 13,000 A.U. These sensitive emulsions must be kept and manipulated with special care. The extreme transparency of the atmosphere for infra-red has enabled photographs to be taken, with these rays only, of landscapes up to 331 miles distance from a high viewpoint. If all radiations of wave-length below 7,000 A.U. are eliminated, green foliage is reproduced as white as snow, owing to the intense fluorescence of chlorophyll with a maximum near 7,400 A.U. (C. Déhré and A. Raffy, 1935), and as the blue of the sky is rendered as black and there is no shadow detail the landscape photographs thus taken in sunshine with a clear sky give an impression similar to that of a photograph taken by moonlight.

5. Natural and Pigmentary Colours. By the *colour* of an object is always meant the colour it appears when seen *in white light*, but this colour depends essentially on the nature of the light which illuminates it.

If a paper covered with vermilion is placed successively in various regions of the spectrum, it appears red in the red region, yellow in the transition region, and black in all the others. Its surface, whilst readily reflecting the red and spectral yellow, is not able to reflect the green, blue-green, and blue-violet; it absorbs and, as it were, destroys these radiations. In white light the surface appears red because of the predominance of red in the light which it reflects. The vermilion layer will appear always red when illuminated by a light which contains red; and black in all other cases. The colour is thus not actually in the vermilion, but in the light.

Similarly, a yellow flower appears successively red, yellow, or green in the corresponding spectral regions, and black in all the others.

No natural or manufactured object, no matter by what process its surface is covered, can even approximately be considered as *monochromatic*, that is to say, as reflecting only radiations of very nearly the same wave-lengths. Pure spectral colours do not exist in Nature (unless in the rainbow); all coloured objects, natural or artificial, extinguish more or less completely some of the radiations of the light which shines on them, and it is the net result of the reflection of the other radiations which the eye observes. *Colour is therefore the result of a subtraction process.* White light becomes coloured because certain of the radiations in it are extinguished. It is therefore logical to define the colours of things by the spectral regions which they absorb. A bright yellow like that of the petals of a buttercup is due to the absorption of the blue-violet region and to the free reflection of the two other regions, green and red. If, on the other hand,

an object reflects to the eye only the yellow radiations, these are such a small portion of white light (less than 1 per cent) that the object appears almost black, or at least a very deep olive.

By studying successively different colours, selected for the utmost purity and intensity, it can be shown, at least to a first approximation, that some of them absorb simultaneously two of the chief spectral regions that we have considered, whilst others, absorbing only one of these regions, appear to be much more luminous. The table given below sets out some data on this point.

Colours	Spectral regions extinguished	Spectral regions reflected
Ultramarine blue.	Green + red.	Blue-violet.
Peacock blue.	Red.	Blue-violet + green.
Emerald green.	Red + blue-violet.	Green.
Cadmium yellow.	Blue-violet.	Green + red.
Vermilion.	Blue-violet + green.	Red.
Carmines and purples.	Green.	Red + blue-violet.

This table shows us the existence of a colour not having any spectral equivalent. The purest type of this is the intense rose colour given by dyes such as rhodamine, rose Bengal, or erythrosine.

6. The colours which each reflect two of the chief regions of the spectrum are known as the *primary colours* by painters and printers, because by superposing them two at a time, thus adding together their respective absorptions (mixing of colours by subtraction of light), the intermediate colours can be obtained which only reflect one chief spectral region. For example, by superposing a peacock blue, which absorbs the red, and a yellow, which absorbs the blue-violet, we obtain a green, since this is the only spectral region transmitted simultaneously by the two superposed colours. The mixtures thus obtained are necessarily darker than each of the mixed colours.

By placing close to one another little dots of colour so small that when looked at by the eye from a normal distance they appear blended into a single colour (the technique of the pointillist and of Autochrome), the mixing of colours is brought about by the *addition* of lights. The colour of the mixed light, for the reason that it is made up of the radiations reflected by each of the colours in the mixture, is more luminous than each of the colours separately.

7. The colour of a given substance depends to a very considerable extent on its state of division and on the medium in which it is. Many cases are known in which crushing a substance to a powder decreases its coloration. For example, blue copper sulphate appears white after being powdered. In addition to the light which has penetrated into the substance and which comes out from it coloured, due to the absorption of certain of the radiations in the incident white light,[1] there is always a certain proportion of white light reflected or diffused from the surface without alteration in colour, and which diminishes the actual coloration of the substance. In the case of a polished surface the white light is reflected almost entirely in the direction determined by the laws of reflection from mirrors. It is thus only in this one direction that the colour is diminished by reflection, and sometimes even almost completely lost in the considerable excess of white light reflected; in other directions the coloration appears with maximum intensity.

In the case of a coloured powder or of a matt surface, the white light is scattered without change of colour approximately equally in all directions, so that it becomes impossible to see the true colour of the substance. This effect would be diminished by wetting the surface of the body with water (it is known that photographic proofs printed on matt papers are always more beautiful and vigorous when wet than after drying), but this kind of colour intensification can be made more permanent by replacing the water, a volatile liquid, by a varnish, the effect of which will be all the more marked if the colour is contained in a more refracting medium. This is the reason why oil paintings or colour suspensions in gelatine give much more intense colorations than can be obtained by means of water colours in a medium of a very weak proportion of gum arabic, or by pastels, a medium-free coloured powder, of which the character of lightness disappears when it is treated with a fixative, i.e. covered with a varnish.

8. The colours given in the table in § 5 are *pure saturated colours*. On the other hand, the *absorption band* of a colour, i.e. the spectral region in which there is more or less complete extinction of the rays of the incident white light, may be of any extent, and its absorption

[1] Only such metals as copper, gold, etc., appear to colour the light by reflection, without the light penetrating inside the substance. The coloured light thus reflected has mixed with it, however, a greater proportion of the unchanged white light.

may be complete or only partial. If the absorption band extends throughout the whole spectrum, either a *dark* or *broken hue* will result (corresponding respectively with dilution of the pure saturated colour with black or grey) according as the absorption in certain regions is complete or not. If the absorption band is of limited extent, and if no rays are completely extinguished, a pale hue will result, equivalent to mixing white and the corresponding saturated colour.

Thus, for example, pure saturated orange absorbs the blue-violet completely and an appreciable fraction of the green, whilst transmitting freely all the red. If the absorption is incomplete, with a maximum in the blue-green, the orange will give a flesh colour due to dilution with white.

In like manner, the admixture of black or of grey with orange gives, in the former case, a dark terra-cotta, and in the other, a broken cream colour.

All shades of colour can be accurately defined by means of the curve showing in the normal spectrum the percentage of diffused light for each of the radiations.

9. Nearly all objects, whether natural, dyed, or painted, even when they appear of very pure and intense hue, give actually only deep or broken hues, since no radiation is reflected completely.

The purest yellows, oranges, and reds reflect generally about 70 per cent of the radiations which, theoretically, they ought to reflect (or scatter) completely. This proportion drops to about 20 per cent for the blues and violets and is less than 15 per cent for the greens. In this connection some measurements carried out by A. J. Bull (1911) on different leaves are given in the table below—

Holly	Ivy	Pine	Iris	Birch (young sprouts)	Beech (sprouts)
12%	11%	8%	10%	19%	32%

This explains the difficulties that are always experienced in giving a satisfactory rendering of leaves.

10. Absorption by Coloured Transparent Media. These phenomena are much more definitely shown when the light is *filtered* through a coloured transparent medium, because the change which takes place in the light during its passage through the medium is not, as in the case of coloured surfaces, viewed by the light which they reflect, masked by the white light reflected from the surface.

Let it be remembered, first of all, that, contrary to a widespread belief, the light is not *coloured* by its passage through a coloured medium; it only appears coloured because during its passage through the medium certain of the radiations which constitute white light are absorbed. A *light-filter*[1] always transmits less than it receives; even the radiations which are transmitted most completely by the most perfect filter are slightly weakened, to an extent not less than 5 per cent.

The use of light-filters is the simplest method which can be used to obtain a coloured light of any desired quality. They are constantly used in photographic practice for such purposes as lighting dark-rooms, correcting the colour rendering by photographic plates, etc.

A light-filter, like a pigmentary colour, is defined by its absorption band. It is as easy to obtain light-filters in gelatine identical with one another by using suitable quantities of pure colouring matters, as it is difficult (it would be even more exact to say impossible) to obtain identical coloured glasses of different makes. When it is also stated that, as a rule, the coloured glasses available for photographic uses are taken from among those used for making stained glass windows or for railway signals, it will be seen how difficult it is to obtain results which are even roughly in agreement by using glasses specified only by their colour. The importance of the progress which has been made since the beginning of this century in replacing coloured glasses by scientifically-determined filters can easily be realized.

A given light-filter absorbs a constant fraction of each of the radiations in the light which passes through it, whatever may be the intensity of the radiation. For example, if a certain orange filter absorbs 70 per cent of radiation 5,700 A.U. (yellowish-green) and 55 per cent of light of wave-length 5,900 A.U. (yellow), these proportions will be absorbed whatever may be the composition of the incident light (white light or a light already coloured), whatever may be its intensity, and irrespective of the position of the filter in the beam. Moreover, any object whatever will appear precisely the same to the eye, whether the filter is placed between the

[1] In this volume the expression *light-filter* will be employed, thus conforming with the photographic nomenclature used in most languages. It is much more accurate than terms such as *coloured screen, ray screen.*

source of light and the object, or directly in front of the observer's eyes, so that the object receives light directly from the source.

If two light-filters are superposed, the transmission of the two together is, for each radiation, the product of the two transmissions separately. This holds in whichever order the two filters may be placed. For example, if a certain orange-yellow filter transmits 50 per cent of the radiation 5,600 A.U. (pure green), and if another blue-green filter transmits 10 per cent of this radiation, then the two filters together, whether placed in contact or not, and in whatever order the light passes through them, will transmit $0{\cdot}50 \times 0{\cdot}10 = 0{\cdot}05$, i.e. 5 per cent of the radiation under consideration.

11. Sources of Artificial Light. The light emitted by different common forms of illuminants differs enormously, as regards the relative proportions of the different radiations, from natural white light. The proportion of red radiations is always greater in artificial sources, and the proportion of violet considerably less. The composition of the light emitted by a solid source depends essentially on the temperature of the source. If the temperature of a body be gradually increased it emits first of all infra-red radiation, then red; the other spectral radiations appear in their order as the temperature rises. Thus only very high-temperature sources emit an appreciable proportion of violet, which is, however, always less than that in solar radiation, since by no known means can a temperature be obtained comparable with that of the sun.

A simple illustration of these facts can be seen in the case of an electric lamp when the voltage is varied, either accidentally or by means of a rheostat connected in the circuit. The light becomes more white and more active on the photographic plate as the voltage is raised.

To a degree of precision quite sufficient for practical needs, one can determine the composition of common artificial sources by considering three groups of radiations, blue-violet, green, and red, with limits respectively at 4,950 A.U. and at 5,800 A.U. instead of considering each individual radiation present.

Source of light	Red	Green	Blue
	%	%	%
Daylight	33·3	33·3	33·3
Metal filament electric lamp	61	32	7
Half-watt electric lamp	50	30	20
Incandescent gas mantle	54	38	8
Low voltage arc, ordinary carbons	50	32	18
Low voltage arc, impregnated white-flame carbons	40	35	25

A well-known effect of the particular composition of the radiation from these light-sources is the changed appearance of certain colours when examined in artificial light; blues change to a deep grey; light greens to yellow; violets and pink colours to red. This drawback can be overcome by passing the light through a bluish glass, which, however, reduces considerably the luminous intensity.

Special mention should be made of illuminants which consist of a tube containing a gas, made luminescent by the passage of an electric discharge through it. Two types of such lamps, mercury-vapour lamps and Neon tubes, are in everyday use, giving respectively a greenish-blue and an orange-red light. Neither of these sources gives a continuous spectrum, as do those enumerated above, but simply fine isolated lines. The mercury lamp gives, in addition to the ultra-violet, several lines in the violet, green and yellow, but nothing in the red. The Neon lamp, on the other hand, gives radiations in all the spectrum regions, but with marked predominance of the red.

It is plain that the light of the mercury-vapour lamp cannot be compensated by filtering the radiations present in excess, since it does not contain any red. Endeavours have been made to obtain from it white light by using it in conjunction with under-run incandescent electric lamps, or neon tubes, or by using reflectors coloured with rhodamine, which, by fluorescence, transform into red light a part of the ultra-violet by which they are illuminated (§ 4).

CHAPTER II

QUANTITY OF LIGHT

12. Intensity and Brightness. The luminous power of the source is determined by its *intensity* and indirectly by its *brightness*.

The intensity is measured in *decimal candles*, or, for short, in candles, of perfectly definite intensity, which differs only slightly from that of the candles ordinarily used for lighting purposes. As the intensity varies according to the direction of the light, the mean value is generally taken, unless the direction is exactly specified.

The apparent brightness of a source in a given direction is given by its luminous intensity, measured in candles, divided by the apparent area of the source in that direction.

The idea of brightness is of special interest in the case of light-sources used for projection purposes, for in these cases the efficiency depends almost entirely on the brightness.

For general lighting purposes it is usual to avoid using very bright sources of illumination. For equal intensity a low-brightness source having a large surface gives a more diffused light which produces less sharply-defined shadows.

When we come to the question of the lighting of subjects to be photographed, the considerable differences in the composition of the light given by different sources, and especially the very variable proportion of the radiations which affect ordinary sensitive emulsions, make practically worthless any comparisons which are based only on the values of visual intensity.

13. Illumination. The illumination of a surface is measured in *lux* or *candle-metres*, and is that produced on a screen, normal to the direction of the rays and at one metre from a point source having an intensity of one candle.

Using a given surface, it can be shown that the same illumination is obtained on that surface by placing a point source of one candle at one metre, or a source of four candles at two metres, nine candles at three metres, and so on. This fact is always expressed by the law which states that the illumination is inversely proportional to the *square*[1] of the distance. We shall have occasion to refer to this law[2] in dealing with times of exposure and printing. In practice, this law may, however, be applied with sufficient accuracy for practical purposes in all cases where the dimensions of the source are only a small fraction of the distance from the source to the illuminated surface.[1]

When a large surface is illuminated by a source having small dimensions, the illumination of the surface falls off very rapidly on departing from the point of maximum brightness, at which the rays emitted by the source are incident normally. This decrease is still more rapid if, instead of having a radiation approximately symmetrical in all directions relative to the source, the source radiates mainly in one special direction, as is chiefly the case with an illuminated plane surface made incandescent.

14. Quantity of Light or Exposure.[2] The quantity of light received by a surface of unit area, or the *exposure* received by this surface, is the product of the illumination of the surface and the time of illumination. The unit of exposure is the *lumen-second* or *candle-metre-second*, viz. the quantity of light received in one second by a surface of one square centimetre, exposed to a source of one candle at a distance of one metre. We shall see later that in the majority of photographic processes, equal exposures do not produce equal effects if the two factors of the exposure, the illumination and the time, are not the same.

A diffusing surface (not polished) is in a way a source of light, so that a brightness can be assigned to it. For practical purposes this brightness can be considered as proportional to the illumination.

[1] By the *square of a number* is meant the product of the number multiplied by itself; thus, $64 = 8 \times 8$, or 64 is the square of 8.

[2] The law of inverse squares is only valid for point sources, and cannot be applied to the "directed" beams from a lighthouse, a projector, or an enlarging lantern.

[1] In the case of illumination by a linear source seen under a very wide angle (luminous tubes) the illumination is inversely proportional to the distance. In illumination by a luminous surface (diffuser, ceiling, etc.) close to the surface to be lit and projecting considerably beyond it in all directions, the illumination is independent of distance. A window cannot be compared to a source of light. It constitutes a diaphragm which uncovers a variable extent of the source of diffused light (sky, or wall diffusing the light from the sky) according to the position of the point chosen in the room.

[2] The word "exposure" is unfortunately used in two senses, viz. that here defined, i.e. quantity of light, and that of the period of time during which a sensitive surface is exposed to light, e.g. an "exposure" of so many seconds. It will be impossible in this work to avoid using the word in both senses, but it is hoped that no ambiguity will be involved.

CHAPTER III

LIMITS OF LUMINOSITY IN PHOTOGRAPHIC SUBJECTS

15. Range between Extreme Luminosities in some Common Cases. There is a general tendency to exaggerate very considerably the ratio of the extreme luminosities of the various subjects which are photographed. Measurements which have been carried out, either indirectly by means of photographic plates (Hurter and Driffield, 1890) or by direct (visual) photometric tests of points in a subject (Mees, 1914; Goldberg, 1919), have allowed us to assign numerical values to the luminosities of various parts of photographic subjects, such as a landscape, an interior scene, a portrait, etc.

In a sunlit landscape, without any dense shadows in the foreground, the luminosity of the sky (comparable to that of a white paper receiving an illumination of about 16,000 lux (§ 13)) is not more than about 25 to 30 times that of the deepest shadows. The ratio of the extreme luminosities for certain subjects is indicated roughly in the following table—

Subject	Ratio of extreme luminosities
Landscape, with sun in the field of view	2,000,000 : 1
Interior, with windows showing a sunlit landscape	1,000 : 1
Portrait, artificial light, white clothes	100 : 1
Landscape with white sunlit areas and dense shadows in foreground	60 : 1
Lampblack on white paper	20 : 1
Landscape in diffused light, with dark foreground	15 : 1
Interior, no windows or reflections in field of view	10 : 1
The earth, viewed from above: balloon, aeroplane (vertical view)	4 : 1
Landscape in misty weather	2 : 1

The relatively low values of these ratios are due to two facts: firstly, that absolute blacks do not exist in Nature,[1] and, secondly, that, with the exception of polished objects, even the whitest ones reflect only a part of the light which they receive.

[1] The only way to get an absolute black is through a relatively small hole in a large box, the interior of which is entirely covered with black velvet, or, failing this, a coating of lamp black and dextrin (§ 236).

A mass of magnesia, or a block of chalk, the whitest substances that are known, reflect only about 88 per cent of the light which falls on them,[1] even when the surface has been freshly scraped and made perfectly clean. For white paper this value falls to from 60 to 80 per cent according to the texture of the paper, its orientation, and the degree of purity. It is only 78 per cent for freshly-fallen snow and 50 per cent for a white-washed wall.

The blackest surface known, black silk velvet, reflects 0·4 per cent; matt-blackened wood and matt-black cloth 2 to 3 per cent; whilst black packing paper reflects up to 10 per cent of the light falling on it.

In a landscape the ratio of the extreme luminosities becomes less as the sky gets more covered. In full sunlight and with a very clear sky, the shadows are only illuminated by the diffused light from nearby objects which receive the sun's light directly. When the sky is clouded the whole of it acts roughly as a uniform illuminating surface, and there are no longer any shadows. Between these two extremes, the more intense the diffused light from the sky relative to that coming directly from the sun, the more are the shadows illuminated.

In a landscape, the ratio of the extreme luminosities is less for objects farther away. If the distant parts of a landscape are examined with a telescope (or even with a cardboard tube, so as to isolate part of the field of view), no heavy shadow can be observed; diffused light from the atmosphere due to dust and water-vapour in suspension is superposed on the direct light from the object observed. At the farthest distance which can be seen in the direction of the horizon, no detail can be observed, all objects having the same luminosity as the sky, and becoming indistinguishable in a kind of bluish mist, called the *atmospheric haze*. Painters and draughtsmen make use of this fact (known to them as *aerial perspective*) when they wish to convey the impression of extreme distance.

16. Sensitivity of the Eye. Thanks to the reflex movements of the pupil, which, by expanding continuously in a dark place and

[1] These coefficients of diffusion are sometimes called the *albedo* of the substance under consideration.

contracting almost instantaneously in bright light (varying from about 2 to 8 mm. in diameter), automatically regulates the quantity of light which falls on the retina, and owing to the adaptive power of the retina (§246), the human eye can see objects of which the illuminations lie between some millionths of a lux and several million lux. Such extreme differences of luminosity cannot, however, be perceived simultaneously. In full daylight, the minimum perceptible is about 20,000 times more luminous than that perceptible during the night.

The presence in the field of view of an object which is brighter than those surrounding it, and especially of an actual source of light, results in a kind of dazzling of the eye, which diminishes its sensitivity considerably and produces fatigue. The less the intensity of the surrounding illumination to which the eye is adapted, the less may be the illumination of the object in order to give the sensation of dazzle.

The ease with which the eye adapts itself to very different illuminations usually results in feeble intensities being evaluated much too highly. At a very rough approximation the following table indicates the average relative values of the luminosity under different conditions—

Open air, fine weather	Interiors, day-time	Interiors, normal lighting	Streets, at night
1,000	10	0·1	0·001

17. Perception of Details of Luminosity. In monocular vision (one eye only), we distinguish different objects, or different parts of the same object, only by their differences of colouring, or by the variation of luminosity when we pass from one to another. If one examines a landscape or any other object through a blue, green, or red filter of sufficient strength to destroy practically all differences of colour, then the details are perceived solely because of the variation of luminosity from point to point.

In a good light, which is neither too strong nor too weak, the eye can generally perceive the contrast between two adjacent surfaces when their illuminations differ by from 1 to 2 per cent (Nutting, 1914; Goldberg, 1919).

It should be noted that, as in acoustics, the smallest perceptible interval is determined by a *ratio* and not by a difference. The ease with which luminosity differences can be perceived becomes less as one of the surfaces becomes smaller, or when the surfaces compared have a coarser structure. Thus it is easy to perceive on a smooth wall a luminosity difference of 2 per cent, and yet it is difficult to see a difference of 5 per cent on a rough-cast wall, or on one of bricks. The sensitivity of the eye to luminosity differences becomes very much less both in a lighting strong enough to cause dazzle and in the case of poorly-lighted surfaces. In the shadows in a sunlit landscape, luminosity differences cannot be seen unless they are as much as 20 per cent, or 30 per cent, or even 50 per cent in the case of leaves or other masses of a very pronounced structure.

CHAPTER IV

PHOTOGRAPHIC IMAGES: THE IDEAL SCIENTIFIC IMAGE; THE AESTHETIC IMAGE

18. Negative and Positive. The image obtained by the usual photographic processes is a *negative* (Fig. 2), in which the lights in the subject are reproduced as opacities and the shadows as transparencies. The photographic reproduction of this negative by a further inversion of luminosities gives a normal image, or *positive* (Fig. 3).

It cannot be too strongly impressed on a beginner not to judge the value of a negative by its appearance; the negative is only a means to an end, and should be judged only by the prints which it is capable of giving. A *pretty looking* negative is not always the best.

19. Range of Extreme Luminosities in a Positive. The following table indicates the ratio of the extreme luminosities in images on paper, obtained by different processes and viewed under normal conditions—

Typographical impression	from 10 : 1 to 35 : 1
Black tone photographs, matt surface[1]	from 15 : 1 to 20 : 1
Intaglio print (photogravure)	less than 35 : 1
Carbon prints, black tone	about 40 : 1
Black tone photographs, best quality glossy surface[1]	50 : 1
P.O.P. prints, gold toned and glazed	about 100 : 1

These values should be considered as the maxima, corresponding with materials of the best quality and with perfect technique. They vary with the conditions under which prints are viewed; an image in which the whites are more glossy than the blacks appears more contrasty when it is viewed in the open air by diffused light than in the light from a source which is almost a point. It appears still more contrasty when it is illuminated under good conditions near a window (Nutting, 1914).

20. The Ideal Scientific Reproduction. In a photograph which reproduces a subject with absolute fidelity, there ought to be equality between each of the luminosities of the image and the luminosity of the subject at the corresponding point. Obviously this equality is only possible for a certain value of the illumination of the image, and for all other values reduces to a proportionality.

Even supposing that the photographic processes were able to reproduce the subject faithfully over the limited range of luminosities which can be obtained with different papers,[1] it can be seen that reproduction under exact conditions is impossible with an image viewed by reflection, since the range of extreme luminosities of the subject would be limited to 20 : 1 in the case of matt prints, or 50 : 1 in the case of glossy prints.

Note in passing the superiority, for purely record purposes, of papers with glossy surfaces, which not only allow any details to be read under considerable magnification (which cannot be done with a print the surface of which has a more or less coarse structure), but which also permit of a more correct representation of an extended range of luminosities.

Thus one is often led deliberately to depart from the ideal proportionality between the luminosities of the image and those of the subject, and to "compress" the scale of luminosities of the image in such a way as to bring it between the limits which are available in practice.

21. The Aesthetic Image. It would obviously be correct to reproduce strictly the various tones which occur in a dark cave if the photograph obtained was going to be used to ornament the walls of this cave, or of any other place of the same illumination. Since, however, photographs are usually intended to be looked at in a well-lit room, they ought therefore to render the physiological relations of the different

[1] A glossy surface reflects, according to the laws of specular reflexion, at most 10 per cent of the light falling on it (e.g. porcelain and glazed papers). A surface which has a specular reflexion factor of less than 2 per cent appears perfectly matt.

[1] On the contrary, there is no limit to this interval in the case of images viewed as transparencies (diapositives); there is in this case a much greater liberty. Note that this advantage is to a great extent lost if such an image is examined by the reflection from its projection on to an opaque screen, instead of examining it directly. It may be stated as a general rule that as regards the commonest subjects (photographs taken in good daylight or designed to give the impression of being thus taken), the image on paper should, in order to give natural sensations, differentiate, in the different regions, luminosities of which the ratios should be respectively—

High lights, 5 per cent. Half lights, 10 per cent. Deep shadows, 25 per cent.

luminosities of the object, and not their physical values.

The apparent relative luminosities of any scene or object change to a more or less marked degree when the intensity of the illumination

FIG. 2. THE NEGATIVE IMAGE

in which it is examined is modified, just as if the intensity scale were transposed into a new key (F. F. Renwick, 1918).

A lump of coal illuminated by direct sunshine can send back more light than a lump of chalk in the shade, and yet we see the coal as black and the chalk as white. This physiological interpretation does not occur when we look at a photograph in which we may take the image of a black object for that of a white one, or conversely, according to their relative luminosities (H. Arens, 1932).

In order to give to a painting the impression of dazzling light, the artist often has recourse to the suppression or the weakening of the details in the brightest parts of the subject, whilst he conveys the sensation of obscurity to the observer by suppressing the details in the

FIG. 3. THE POSITIVE IMAGE

shadows. These methods are based on a correct observation of Nature, and just as the artist endeavours to reproduce Nature as he sees it, so in the same way the photographer ought, with the same aim in view, to make use of knowledge derived from a study of the characteristics of the sensitive surfaces which he uses.

Such effects as the foregoing may be supplemented by others, e.g. by tinting very lightly with yellow an image representing a sunshine effect; and with blue one which is to give the effect of night, but such general treatment must be done with extreme discretion.

CHAPTER V

PERSPECTIVE: MONOCULAR AND BINOCULAR VISION

22. Geometrical Perspective. The *perspective* of an object or of a group of objects (from the Latin: to see across) is the trace of all the points of intersection of all the straight lines from a fixed point (the *viewpoint* or *centre of projection*) to all the points of the objects to be represented, with a certain surface called the *surface of projection*. This surface is generally a vertical plane, but is sometimes a cylindrical surface (panoramas), or a segment of a sphere (cupolas), or, more rarely, some other surface.

Practically, according to Leonardo da Vinci, the perspective may be defined as the trace which would be obtained on a transparent surface (glass, or gauze stretched on a frame in the case of a plane perspective), when one eye is kept in a fixed position determined by a sighthole, and the other is closed, in such a way that each of the points or outlines of this trace exactly masks the point or the corresponding outline in the subject to be represented.

The perspective of anything of which all the parts, whether real or imaginary, have known dimensions and occupy known positions can be obtained by relatively simple geometrical constructions. Conversely, if a perspective contains the images of certain known objects, it is possible to deduce from it the dimensions and the relative positions of other unknown objects whose images figure in that perspective.

Such a perspective regarded by one eye only from exactly the position of the viewpoint would appear to us, at least as far as the forms are concerned (without considering colours and luminosities), just like the object represented would appear when viewed from the corresponding point, the same outlines being seen in the same relative positions.

In conformity with this definition, the surface of a projection plane only plays the rôle of an open window through which appears the landscape or the scene which was represented.

23. If we consider an object (Fig. 4) which for clearness has been purposely chosen of simple form, a viewpoint O, and a vertical plane T, then the perpendicular OP dropped to the plane from the viewpoint meets the plane at a point P (called the *principal point*), the distance OP being the *principal distance* of the perspective obtained.

Any group of straight lines parallel to one another and to the plane of projection will be reproduced in the perspective by straight lines parallel to those considered. In particular, all vertical lines in the subject will be represented by vertical lines in the perspective.

Any groups of parallel straight lines which are not parallel to the projection plane will be represented in the perspective by a group of straight lines converging to the same *vanishing point*, which is defined by the intersection of the projection plane with a straight line dropped from the viewpoint parallel to the direction in question in the subject.

The vanishing points of all the horizontal lines are situated on the *principal horizontal* HH', the intersection of the projection plane with the horizontal plane through the viewpoint and also (in this case of a vertical projection plane) through the principal point P.

In particular, all the horizontals contained in the façade of the shed (Fig. 4), or parallel to this façade, are represented by straight lines which converge to the vanishing point F, defined by the intersection of the plane of projection with the straight line OF dropped from the viewpoint parallel to the straight lines being considered in the subject. All other groups of lines parallel to the façade of the shed will have their vanishing points on the vertical line FG.

24. Once the *position* of the viewpoint and the *direction* of the projection plane have been determined, the perspective obtained is to a close degree independent of the principal distance. The perspectives obtained from a single viewpoint but on several parallel planes are geometrically similar; any one can be changed into any other merely by proportional amplification or reduction; for example, by means of a pantograph. The principal distance only affects the *scale* of the images, which all vary proportionally.

25. Deformations due to Displacement of the Viewpoint. When a perspective is looked at from a point other than its viewpoint, the different parts of the image are no longer seen at the same angles as the corresponding parts of the subject. The representation in this case is falsified, and one no longer appears to see the

object but only a more or less distorted form of it.

If we suppose at first that the eye with which the perspective is observed remains at a distance

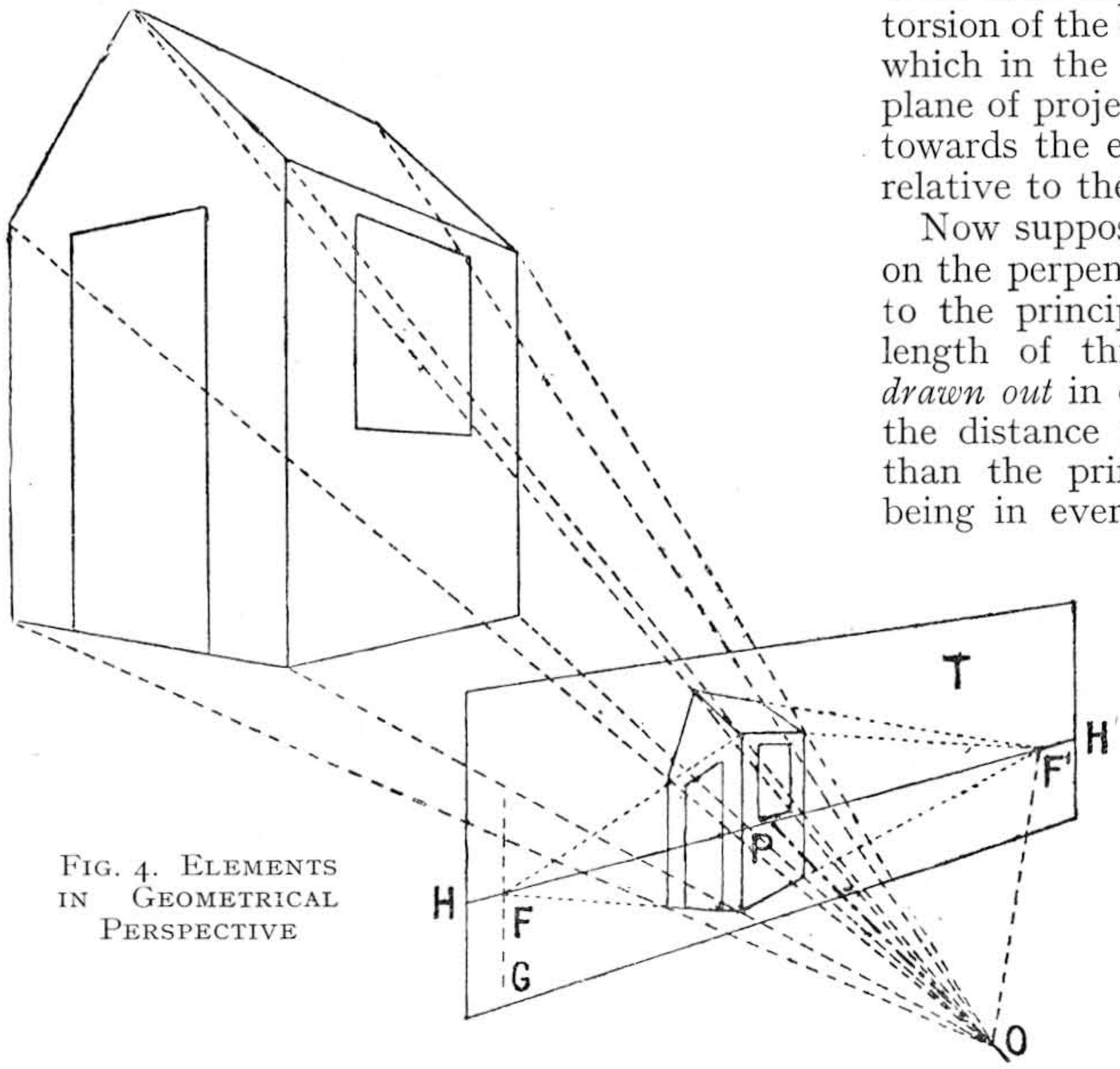

FIG. 4. ELEMENTS IN GEOMETRICAL PERSPECTIVE

from it equal to the principal distance, but without being placed at the viewpoint, the object undergoes a *torsion*. For example, if the eye is in a position higher than the viewpoint, all the horizontals of the subject appear to slope down from the observer to the horizon; their vanishing points become in fact lower than the eye, and the apparent slope of each horizontal will be that of a straight line joining the eye to the corresponding vanishing point.

Next, suppose that the eye, while remaining at a distance from the projection plane equal to the principal distance, is displaced laterally. To make this clear, suppose it is placed opposite the vanishing point F (Fig. 4). This point, being now substituted for the principal point, would be on a perspective examined under correct conditions, the vanishing point of the straight lines of the subject perpendicular to the projection plane. Under the actual conditions of examination one is thus led to consider the façade of the shed as perpendicular to the plane of projection, which is not the case.

Every combination of the two displacements of the eye, the effects of which we have just considered separately, will result in a double torsion of the object. Notably, the straight lines, which in the object were perpendicular to the plane of projection, will appear always pointing towards the eye, whatever may be its position relative to the projection plane.[1]

Now suppose that the eye, whilst being kept on the perpendicular from the projection plane to the principal point, is displaced along the length of this line. The object will appear *drawn out* in depth or *compressed*, according as the distance of observation is greater or less than the principal distance, the deformation being in every case proportional to the ratio of these two distances. Imagine two objects at A and B in the horizontal plane (Fig. 5). In the perspective traced from the viewpoint O on the projection plane T, the images of these two points are at a and b. If, instead of observing this perspective from its viewpoint, the eye is moved to O', at double the distance, obviously the objects cannot be considered as hanging freely in the air, but must be resting on the plane shown. One is, therefore, compelled to assign to these points the positions A' and B', the object thus being drawn out in the ratio of 1 to 2. If

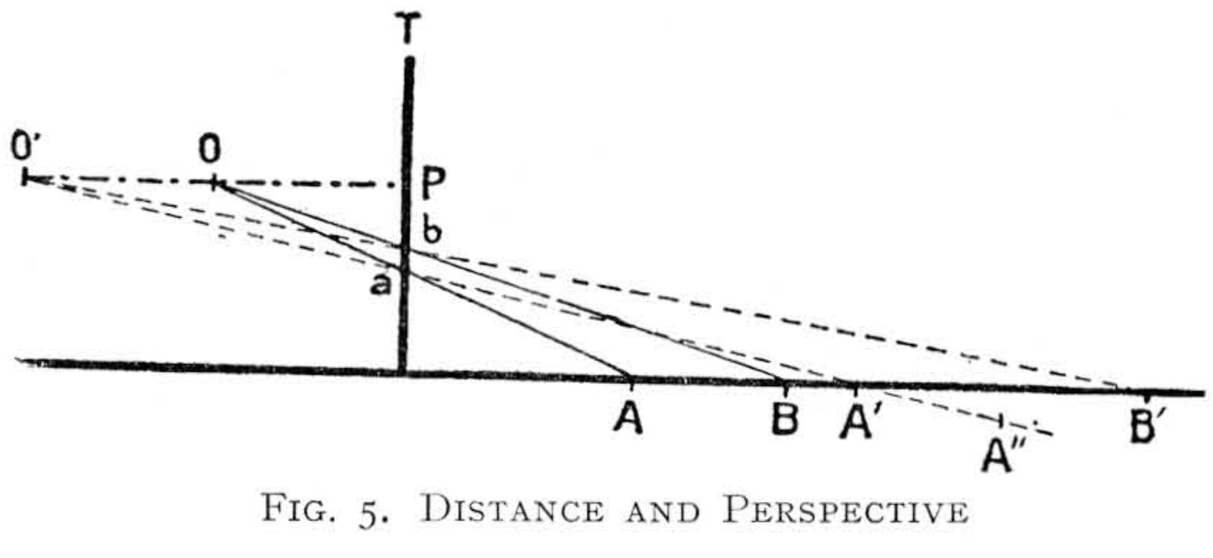

FIG. 5. DISTANCE AND PERSPECTIVE

[1] Consider the case of a projection image containing a weapon which is being aimed straight in front. It is no more astonishing that whatever position an observer occupied relative to this image, the weapon would always appear to be pointing straight at him, wherever he might be, than to find that such an image viewed from the side does not show the profile of the weapon.

the distance AB is more or less fixed (the case of a man lying down to whom cannot reasonably be attributed double the normal stature), the details of the object situated at A', which we intuitively consider as being at A'', will be on an exaggerated scale for the position that we attribute to them in the object. The front planes are expanded relatively to the back planes.

Obviously, these deformations may occur in addition to those due to the displacement of the observer upwards or across.[1]

26. Normal Distance of Vision and Angle of Visual Field. A normal-sighted person generally chooses a distance of 10 or 12 in. as the distance from his eyes at which to examine such objects as printed matter, etc. This distance is usually known as the *normal distance of vision*. The smallest distance of distinct vision at which things can be seen without any abnormal effort is rarely less than 6 or 8 in.; a normal eye can often see distinctly an object only from 4 to 6 in. away, but in such cases fatigue sets in so rapidly that this can only be done for a few seconds.

In order that the eye may perceive simultaneously all the objects represented in a picture, the latter must not be too extended. The eye places itself at distances from the picture ranging between the length of the diagonal of the picture and three times this length, the extreme angle between the rays used varying between 53° and 19°.

27. In order that a perspective may be examined with avoidance of the distortions described in § 25, it must be looked at from its viewpoint. The principal distance should then be at least equal to 10 in. (or, as an extreme, 8 in.), unless the picture is examined by means of a magnifying glass, which allows it to be brought nearer to the eye;[2] moreover, it is essential that the included angle (angle between extreme rays converging to the viewpoint) does not appreciably exceed 50°.

If these conditions are not conformed with, the perspective can only be seen falsely. According to what has already been said, it can easily be realized that the tolerances in the position of the eye during the examination become greater the greater the principal distance. In particular, if the principal distance is at least equal to 10 times the mean separation of the eyes, there will no longer be a very marked difference between the objects as received individually by each of the eyes, and the binocular view of the picture will no longer cause any inconvenience.

28. Anomalies of an Exact Perspective. A perspective, traced directly on glass or resulting from correctly carried out graphical construction, is of necessity exact in the geometrical sense, but it may be either *picturesque* or *defective*, according to the value chosen for the principal distance and the included angle. If the eye can be placed at the viewpoint, it will obviously see an object identical with the object seen from the same viewpoint, but as soon as one moves from the normal position (and this will necessarily be the case if the principal distance is very short, or if the included angle exceeds the angle of the visual field) serious distortions will appear, especially towards the limits of the field. These distortions are due especially to the fact that the image projected on our retina is projected on to a sphere, a very different case from a plane perspective.

From whatever angle we may look at a sphere its outline always appears exactly circular. On the contrary, the plane perspective of a sphere is an ellipse, except in the case where the centre of the sphere is on the perpendicular from the viewpoint to the projection plane. As the visual ray to the centre of the sphere makes an increasing angle with this perpendicular, so the distortion also becomes greater.

Nevertheless, if one stands in front of a colonnade, all the columns appear the same diameter. If there is a difference, the columns farthest away appear somewhat smaller; in the perspective of a colonnade seen from the front, the images of the columns become larger as one moves farther away from the principal point.

Fig. 6 (from an old paper by Moëssard), showing in elevation, in plan, and in perspective a series of identical vertical cylinders, each being surmounted by a sphere, is an excellent example

[1] Frequent examples of such deformations are met with in the use of painted backgrounds of certain design, seen or photographed from a point other than the viewpoint of the original projection.

[2] When an image is observed with a magnifying glass under conditions such that the image is at infinity (this condition is instinctively fulfilled by an observer of normal vision, or by one who keeps on his correcting glasses), the image is seen as it would be if the centre of rotation of the eye coincided with the optical centre of the glass. In order to examine under perfect conditions a perspective with a principal distance less than the distance of distinct vision, a magnifying glass must be chosen of which the focal length is equal to this principal distance. Incidentally, note that the magnification of a magnifying glass is expressed by a quarter of the number expressing its converging power in diopters. Thus a glass of 8 diopters (focal length 125 mm.) has a magnification of 2.

of anamorphosis (i.e. a perspective which is displeasing, although correct), due to the fact that an excessive angle[1] has been included (by means of the angular graduations given, the obliquities corresponding with different deformations may be seen).

In fact, the artist, painter, engraver, or draughtsman always modifies the strict laws of geometrical perspective by means of certain tricks of which the greatest masters have given

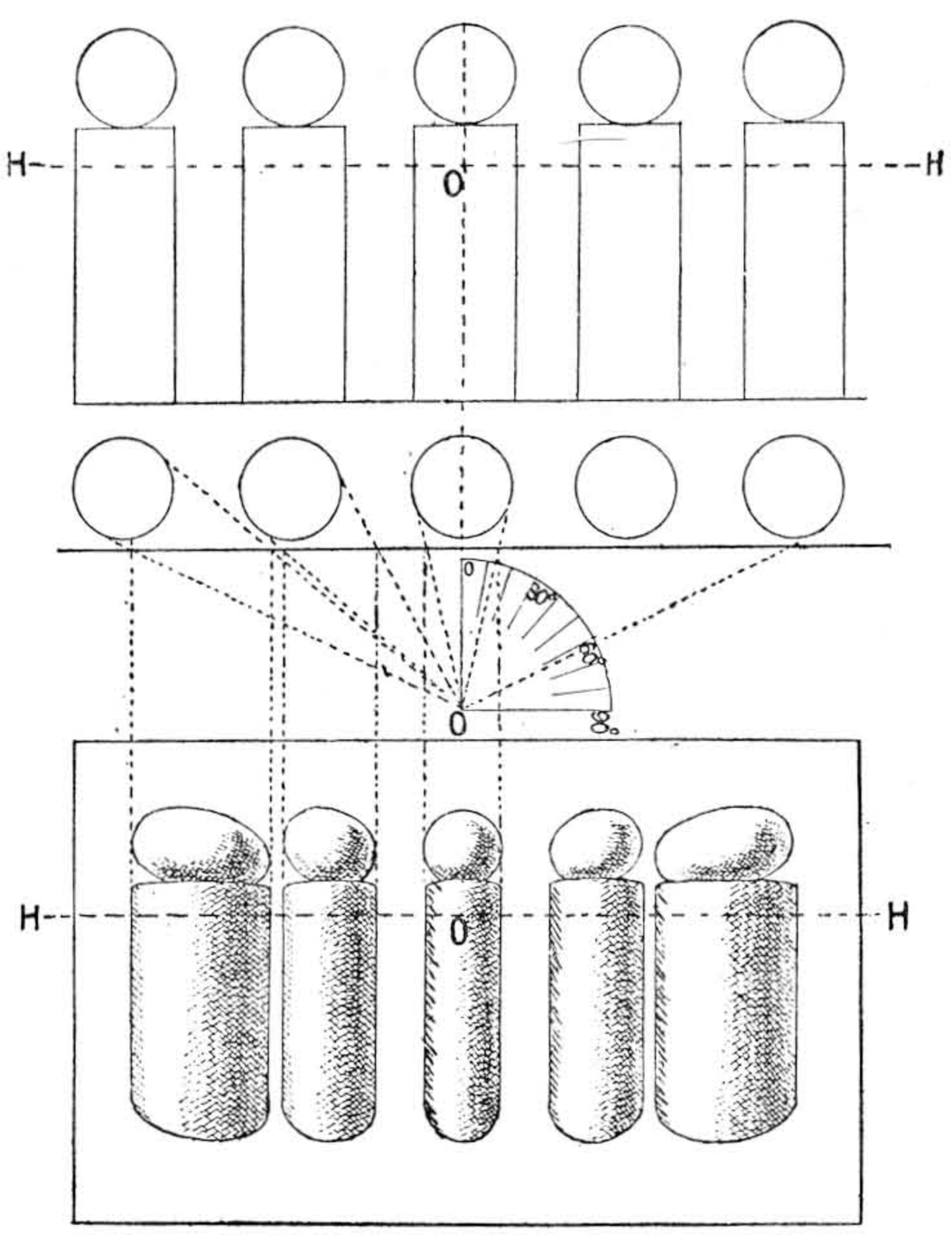

FIG. 6. WIDE-ANGLE PERSPECTIVE

examples. He generally limits the included angle to between 15° and 20° by choosing a principal distance somewhere between twice and three times the greatest dimension of the image. Further, even if he respects the laws of perspective whilst tracing the principal lines, he departs from them for the details, each object being represented almost as if it were seen from the front. It can almost be said that the painter only adopts the plane perspective for the placing of the different elements, the tracing of these

[1] Distortion similar to that of the spheres represented in Fig. 6 is often noticed in the faces of people photographed in the foreground under a relatively large angle (photographs of crowds, banquets, etc.)

resulting from the drawing on the plane of their spherical perspectives.

Notice, however, that the observer who can only see with one eye and who cannot move, though provided for by the theorists of perspective, is not found amongst Nature artists, who always judge their effects with both eyes open, and frequently move about so as to look at their picture from points far removed from the actual viewpoint; by doing this they can correct the anomalies which would show to badly-placed spectators. This explains why pictures in museums can be examined from very different positions, and often even abnormal positions, without appearing displeasing. Unfortunately, this wide tolerance is not found in the examination of a perspective, unless its principal distance is very great and the included angle very small.

29. Influence of Choice of Viewpoint. The choice of viewpoint affects the aspect of the

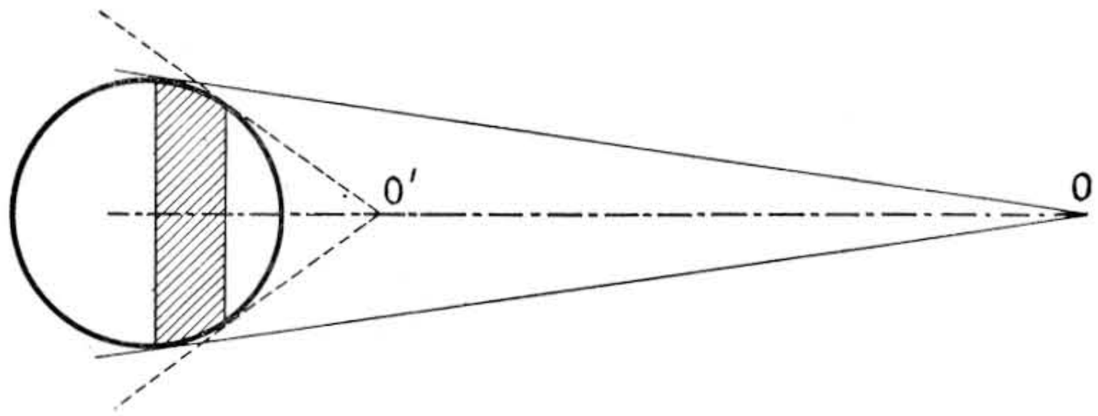

FIG. 7. EFFECT OF VIEWPOINT ON PERSPECTIVE

image of each of the different objects and at the same time the ratio of the respective sizes of the images of objects situated at different distances.

Consider the case of a sphere (Fig. 7), and let us determine the perspectives from the two viewpoints O and O'. It will be realized at once that, seen from very near, the sphere will show only a small fraction of the surface which can be seen from a farther distance away; all the shaded zone will be seen from O and not from O'. It can be seen that if we substitute for the sphere a human face seen from the front, then from the viewpoint O' the ears will be hidden, and the mouth (the opening of which represents about a quarter of the diameter) will occupy a third of the apparent diameter and seem to be enormous.

Now consider the case of two objects of the same dimensions situated at different distances from the viewpoint, in the same direction. If the nearer of the two objects is at a distance from the viewpoint equal to n times the distance between the objects, the respective scales of

their images will be in the ratio $n/(n+1)$. Thus the images will become less different as n gets greater, as is shown in the following table, where the values of $n/(n+1)$ are given for different values of n.

n	1	2	3	4	5	10	20	100
$n/(n+1)$	0·50	0·66	0·75	0·80	0·83	0·90·	0·95	0·99

Thus it can be seen that if the distance of two equal objects is equal to the distance of the nearer of them from the viewpoint, one of

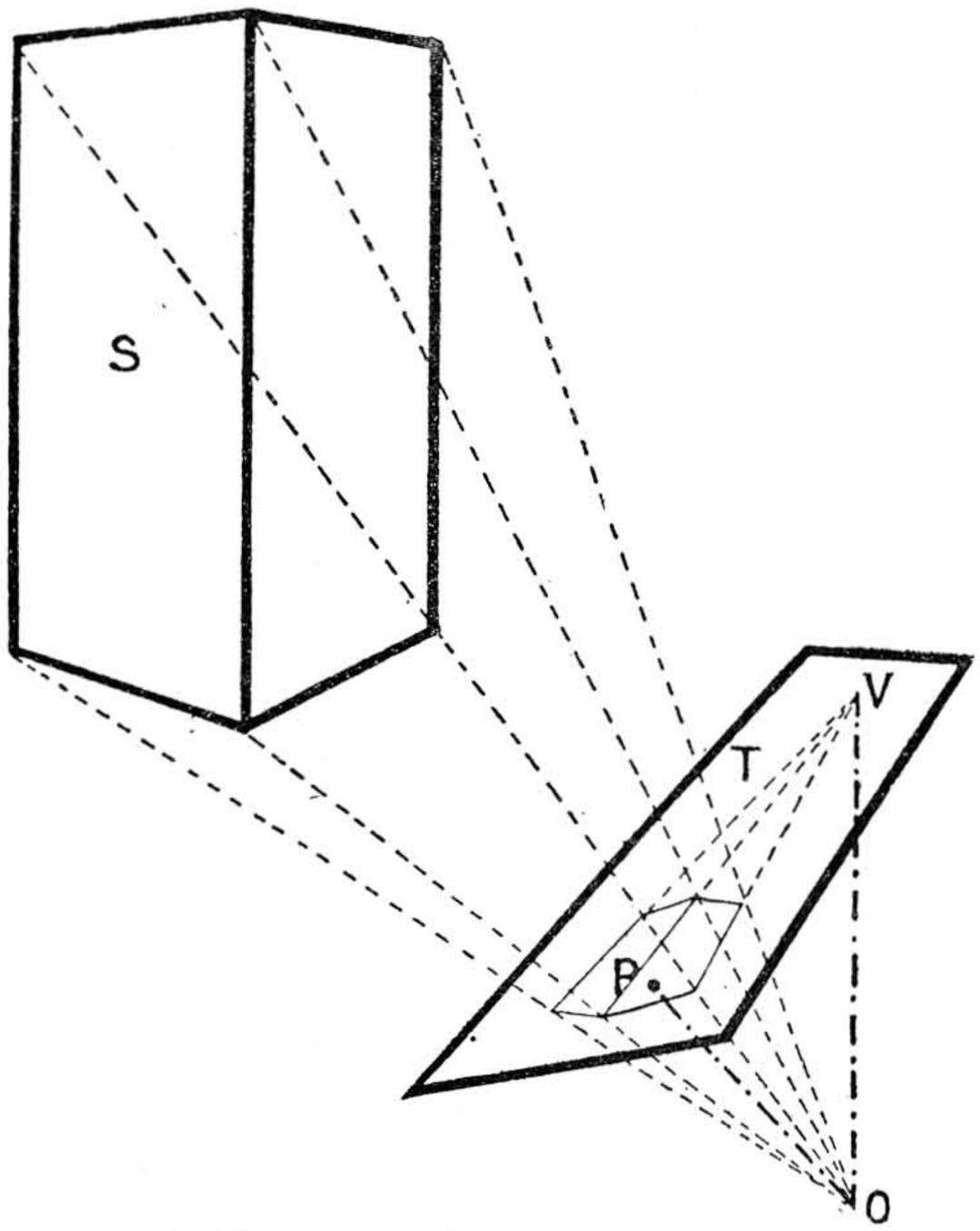

FIG. 8. PERSPECTIVE ON AN INCLINED PLANE

the objects will be represented twice the size of the other. If we multiply by ten the distance to the first of the objects, and compensate for this increase of distance by extending the principal distance until an image of the nearer object is obtained which is the same as previously, the more distant object will not differ from it more than 10 per cent.

Returning now to the case of the front view of a portrait, and bearing in mind that the point of the nose is about $4\frac{3}{4}$ in. or $5\frac{1}{2}$ in. in front of the back outline of the ears, it can be calculated that in a portrait taken at about 4 ft. from the sitter, a rigorous application of the laws of perspective would result in the nose being represented on a scale greater by 10 per cent than the scale of the ears. A painter, when sketching a portrait, is always at least 10 or 15 ft. from his model.

Let us take the case of a house, and consider its perspective at a distance of about 300 yd. At this distance the house is in correct relation with the distant landscape. If now we approach to within 20 yd. of it, whilst keeping the same principal distance, the image of the house will be magnified 15 times, but the distance will be practically the same size as before, and will thus be on a much smaller scale.

Similarly, a painter, when prevented from going back far enough to see properly, would design the background on a magnified scale in order to correct this effect, which, though it would be scarcely noticeable in the examination of a landscape itself, because our brain corrects the sensations which our eyes transmit to it, might be displeasing in the case of a plane image.

30. Binocular Vision. Only a rough idea of the relative distances of objects can be obtained by monocular vision (using one eye only). One knows how difficult it is to place a finger in the neck of a bottle placed by someone else at the height of the observer's eyes, when one eye is shut. The factors to be appreciated are the variation of the apparent dimensions of an object of known size, the changes in the relative position of the objects when the observer moves transversely, the aerial perspective (§ 15), and the variations in the effort necessary to accommodate the eye (*focussing* the eye) according to the distance of the object.

The causes which give rise to the sense of relief in *binocular vision* (using two eyes) are, on one hand, the dissimilarity of the two retinal images, each eye seeing a single near point projected on two different points of the background, and on the other hand, the effort of convergence of the ocular axes towards the fixed point, this effort becoming greater as the point becomes nearer. These two circumstances only play a part for not very distant objects. Aviators and balloonists verify daily that at a few hundred yards above the earth all sensation of relief disappears, even for the highest buildings.

Consider two perspectives of a single subject, each perspective having the same principal distance, on two parts of the same plane, from two viewpoints the separation between which is equal to the mean separation of the

eyes (about 65 mm.). If the centres of rotation of one's eyes be placed at the viewpoints, each eye only seeing the perspective of its own viewpoint, the same sensation of relief will be experienced as in direct observation of the object with the two eyes (the variations of the accommodation no longer come in in this case). This relief may be so striking that an observer who did not already know would scarcely believe that the solid image which he could see was actually the result of two plane images.

This fact forms the basis of *stereoscopy*. Stereoscopic vision implicitly assumes that the observer has two equal and symmetrical eyes.

31. **Perspective on a Non-vertical Plane.** If from the viewpoint O (Fig. 8) the perspective of a solid body S be drawn on the non-vertical plane T, the images of all the vertical lines of the solid will converge to the vanishing point V where V is the intersection of the plane T with the vertical dropped from the viewpoint.

In presenting this plane under the same obliquity to an observer whose eye, placed at O, would be forced to look in the direction of the principal point P, especially in the absence of external marks which would indicate to him the obliquity of the plane on which was the perspective, he might have the illusion of the object represented. But an observer who did not know, examining such a perspective under the same conditions as he would regard a normal one, would be led to conclude that the solid object represented was not a parallelepiped, but a truncated pyramid. He might not unnaturally conclude that the solid figure was represented as in the act of falling.[1]

A vertical plane of projection is the essential condition for the reproduction of vertical lines as verticals in the perspective.

Experience shows that once the perspective has been drawn under these conditions, the projection image can be then shown obliquely without its being displeasing (the case of pictures hung rather high in such a way that their viewpoint is at the height of the observer's eyes when standing), though from the moment when we realized this obliquity we should not consider as admissible the representation of an object on an inclined surface, even if this was viewed under its normal inclination.

32. **Panoramic Perspective.** In cylindrical perspective, known as panorama, the viewpoint is situated on the axis of the cylinder of revolution (vertical cylinder), which constitutes the projection surface. In this system of perspective, verticals are represented by verticals, the horizon line by a meridian circle, and all other straight lines by ellipses. When the projection surface is maintained in its cylindrical form and looked at from the viewpoint, what is seen is identical with the subject, but if the projection surface is now unrolled and becomes a plane, all the straight lines of the subject, with the exception of the verticals and the horizon line, are represented by curves. Thus

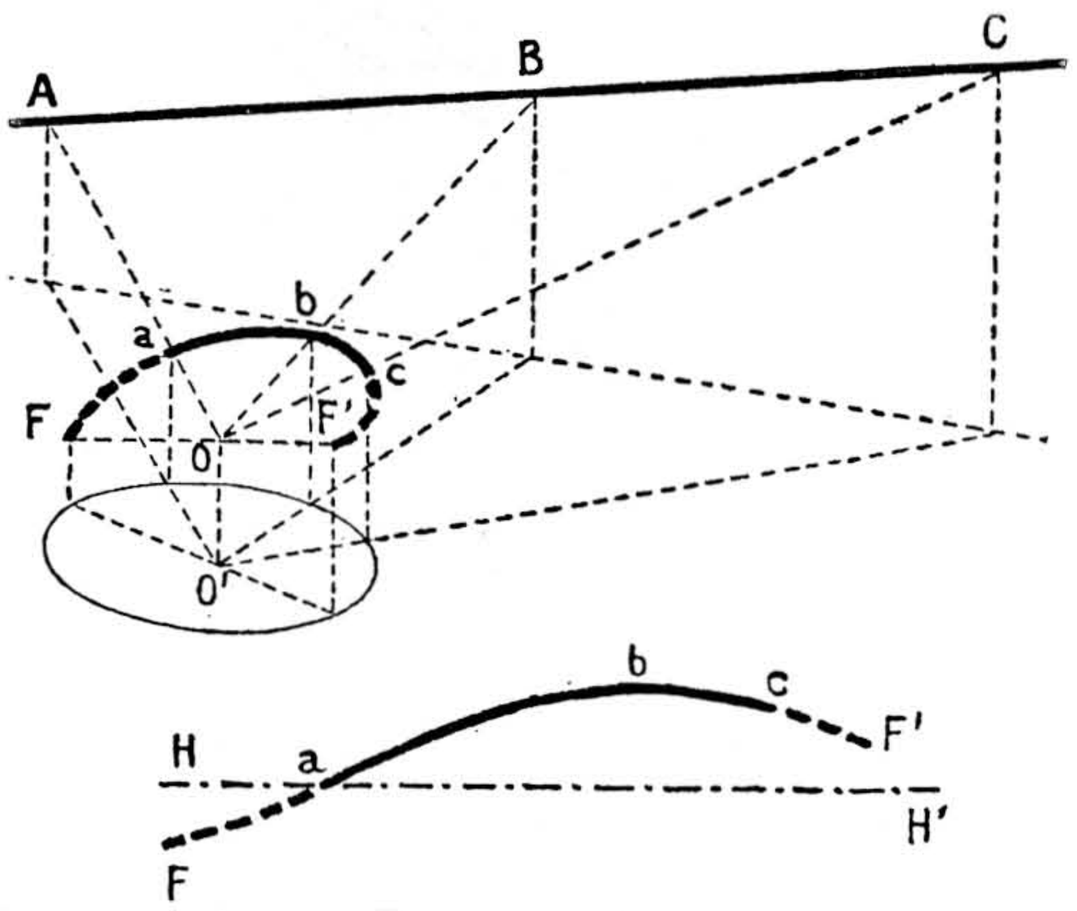

FIG. 9. PANORAMIC PERSPECTIVE

it is, for example, that the straight line ABC (Fig. 9) is represented in the panoramic perspective, after this has been flattened out to a plane, by the curve abc, with vanishing points at F and F', which are common to the perspectives of all other straight lines parallel to that considered.

Such deformations are obviously a drawback in cases where it is desired to represent subjects containing numerous straight lines other than the verticals, such as architectural works or views of towns having straight streets. But the suppression of all deformations due to excessive obliquity of the visual rays relatively to the projection of plane perspectives (§ 28, Fig. 6) gives to panoramic photographs, often limited to a fraction of the complete horizon, a special interest in such cases as the representation of a very extensive landscape, such as high mountainous country, or of a large number of people.

Due to its being unfolded to give a plane surface, such an image no longer permits of

[1] We are not envisaging here the case of views intentionally taken looking downwards or upwards for documentary purposes or in order to achieve some special effect.

one viewpoint only, but of an *infinite number* of them, arranged on a straight line parallel to the horizon line, at a distance from the image equal to the principal distance. Such a projection should be considered as the combination of a great number of projections each formed from a straight vertical band, each to be examined from its particular viewpoint. The observer moving in front of the projection should thus only look at the details of the image which he sees exactly opposite to him.

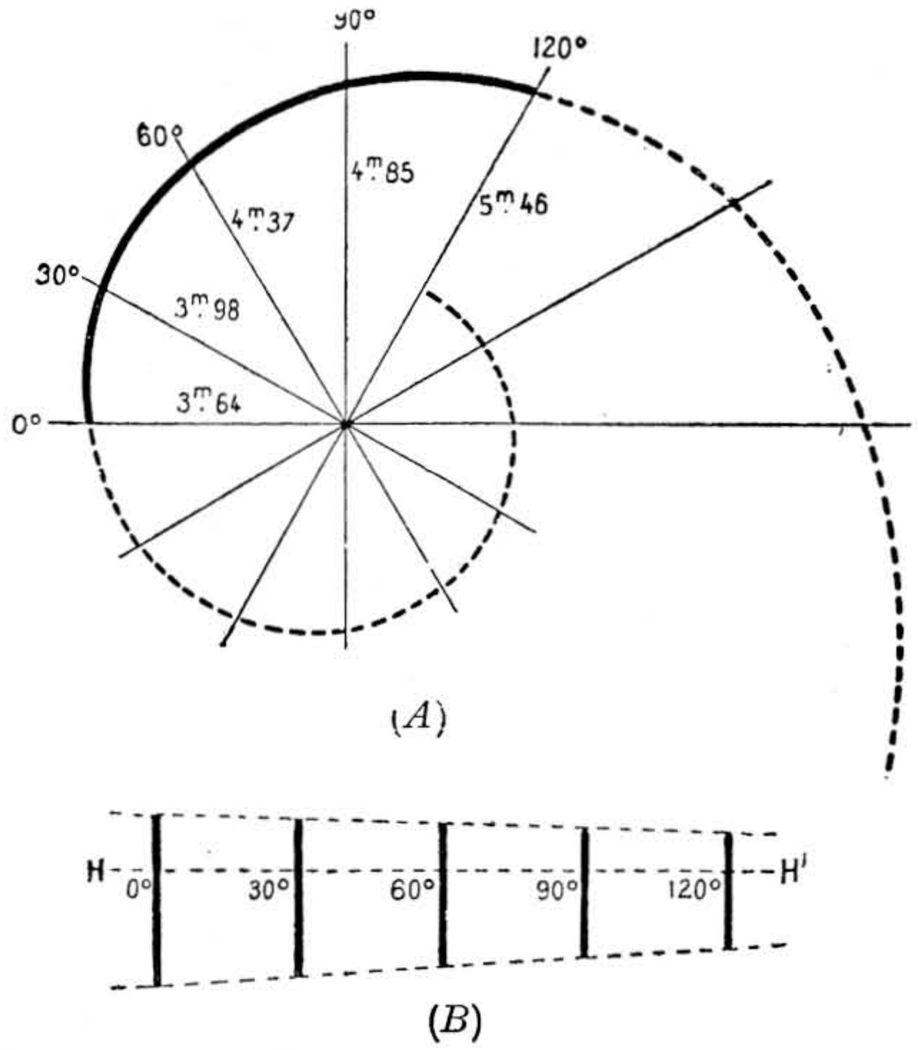

FIG. 10. (*A*) CURVE FOR PLACING FIGURES TO APPEAR AS IN (*B*) ON A PANORAM NEGATIVE

33. In practice, the question has arisen as to how to place a series of people in such a way that, after the panoramic photograph has been flattened out to form a plane surface, the figures appear exactly in line.

To do this the people should be placed along an arc of a hyperbolic spiral (C. J. Stokes, 1919) having its origin at the viewpoint, that is on the axis of the cylinder. To trace the correct curve to give the desired result, the procedure is as follows—

With a principal distance of, say, $10\frac{1}{4}$ in., we may use a projection, which, after being unfolded to form a plane, measures 24 in. long, corresponding to an arc of 132° in a circle of $10\frac{1}{4}$ in. radius. Considering only a part of this, we will include the people within an angle of 120°. We will allow a height of $4\frac{3}{4}$ in. for the image of the nearest person and 3 in. for the ones farthest away, assuming the people to have an average height of 66 in. Equal lengths measured on the horizon-line of the image on the plane correspond with equal angles on the ground. The diminution of the height of the images being continuous, and the ratio of the dimensions of a person to his image being equal to the ratio of their distances from the viewpoint, the distances of people in the different directions, defined by the angle they make with the direction chosen as origin, may be calculated as follows—

Angle	Height of image	Distance from subject to viewpoint
0°	12 cm.	(168 × 26)/12 = 3 m. 64 cm.
30°	11 ,,	(168 × 26)/11 = 3 m. 98 ,,
60°	10 ,,	(168 × 26)/10 = 4 m. 37 ,,
90°	9 ,,	(168 × 26)/9 = 4 m. 85 ,,
120°	8 ,,	(168 × 26)/8 = 5 m. 46 ,,

Fig. 10A represents the curve along which people should be placed in order to obtain the effect shown in Fig. 10B. The extensions of the spiral in parts other than those coming into the case considered have been traced. It will be noticed that in one direction it tends to approach more and more nearly to a circle, and in the other, to approach indefinitely to a straight line.

34. **Sharpness of Vision.** Sharpness of vision, variable with the illumination and the observer, is measured by the distance from centre to centre of black parallel lines of equal width, separated by white spaces of the same width, this distance being expressed as a fraction of

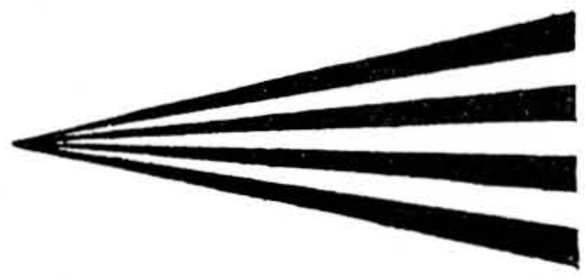

FIG. 11. TEST OBJECT FOR SHARPNESS OF VISION

the greatest distance at which the lines can still be separately seen when viewed closely, i.e. when their images are formed on the most sensitive part of the retina. A good eye can distinguish two lines the distance apart of which measured from centre to centre corresponds to an angle of 1 minute. This would be given by a distance of 1/250 in. at 12 in. A kind of fan-shaped object such as that shown in Fig. 11 is used frequently, with equal sectors alternately

black and white. In this case the smallest distance from the thin end is determined at which the sectors are still distinguishable from one another. Practically, the sharpness of an eye is considered to be about the average when it can separate lines $\frac{1}{250}$ in. apart at a distance of 8 in., corresponding with an angle of $\frac{1}{2000}$ radian.

35. Depth of Field. When the eye is accommodated for regarding an object at a certain distance with maximum sharpness, objects nearer and farther away do not give sharp images on the retina. There exists, however, a certain zone within which all objects appear to the eye with the same sharpness. The depth of this zone is known as the *depth of field*, which becomes greater as the object viewed is farther away.

In fact, in looking at a scene of which the different elements are at very different distances from the observer, the accommodation varies constantly as the eye concentrates on the various points. Thus, in the average sensation which results, the most important points are seen more sharply than those of only secondary interest, which are, as it were, only seen accidentally.

PART 2
THE OPTICAL IMAGE BEFORE PHOTOGRAPHIC RECORDING

CHAPTER VI

THE CAMERA OBSCURA AND PINHOLE PHOTOGRAPHY

36. The Camera Obscura. The camera obscura (Fig. 12) appears to have been known at a very early date.[1] In one of his undated manuscripts, the celebrated painter, engineer, and philosopher, Leonardo da Vinci, who died in 1519, describes this phenomenon in the following way, without giving any indication that it was either a recent or personal discovery: "When the images of illuminated objects enter a very dark room through a very small hole and fall on a piece of white paper at some distance from the hole, one sees on the paper all the objects in their own forms and colours. They will be smaller in size and will appear upside down because of the intersection of the rays. . . . A suitable hole can be made in a very thin plate of iron."

Outside the room each illuminated point, scattering the light in all directions, sends through the aperture a beam of light in the form of a very narrow cone. This cone has its apex at the object point in question, and its base is that of the aperture. Thus it illuminates the scattering or translucent screen on which it is received by a small spot, which is thus the image of the point object.

Within certain limits, the spot formed by the projection of the aperture on the screen will become smaller, and consequently the whole image sharper, as the aperture itself becomes smaller and as the material in which the aperture is made is thinner. The image will also become sharper as the aperture is moved farther away from the screen. In fact, under these conditions, the sizes of the individual spots increase much less quickly than the dimensions of the image.[2]

The camera obscura was much improved in the second part of the sixteenth century by fitting a biconvex lens at the aperture. In the early part of the eighteenth century it was developed into a portable instrument similar to our present-day cameras, and was frequently used by artists as a means of making sketches from Nature.

37. Identity of the Camera Obscura Image with an Exact Perspective. In 1568 D. Barbaro recommended the use of the camera obscura for automatically making perspective drawings.

Suppose that a sheet of glass is put in front of the camera at the same distance from the aperture as the screen on which the image is projected is behind, and parallel to, this screen. The perspective formed on this surface with the aperture as viewpoint will be accurately formed by the intersection with the plane of this glass of all the rays which, after passing through the aperture, go to make up the images of the external objects. The exact identity of this image and of the perspective obtained can be easily shown (Fig. 13). It is due to the fact that the traces of the points of intersection of the lines in a beam of concurrent straight lines, with two parallel planes symmetrically placed relative to the meeting point of the lines, are superposable one on the other.

38. Pinhole Photography. Although not much practised in recent years, pinhole photography can give very useful results in the case of inanimate objects; it even yields images under conditions in which it would be impossible to get comparable results with the objectives now available (Méheux, 1886).

In order to obtain an image of sufficient sharpness it seems to be an advantage to use an aperture of the smallest possible diameter in a very thin plate.[1] A simple experiment, such as forming the image of a luminous filament of an electric lamp, shows that with each distance of the object from the camera there corresponds,

[1] It was apparently mentioned by Ibn al Haitam in 1038 (Eder's *Jahrbuch für Photographie*, 1910, p. 12).

[2] Such images sometimes occur unintentionally on photographic plates as parasite images or "doubles," when there happens to be a small hole in the outside wall of the camera, such as a screw-hole which has not been stopped up.

[1] A thick plate would restrict the field included, and would decrease the contrasts in the picture, owing to light reflections from the cylindrical surface of the aperture.

for a given diameter of the aperture, a distance from the aperture to the receiving screen (e.g. a matt glass) at which the greatest possible sharpness of the image is obtained. Actually, the phenomenon of the diffraction of light modifies, sometimes in one way and sometimes in another, according to the circumstances, the effective diameter of the spot, as ascertained in accordance with the laws of the rectilinear propagation of light.[1]

There is quite an appreciable latitude in the

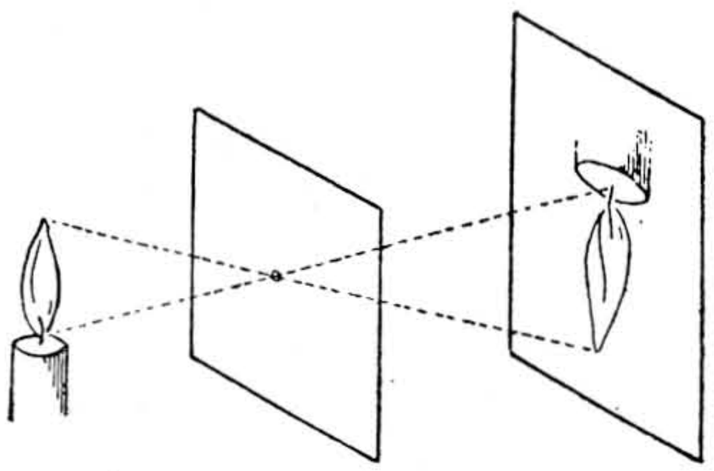

FIG. 12. FORMATION OF THE IMAGE IN THE CAMERA OBSCURA

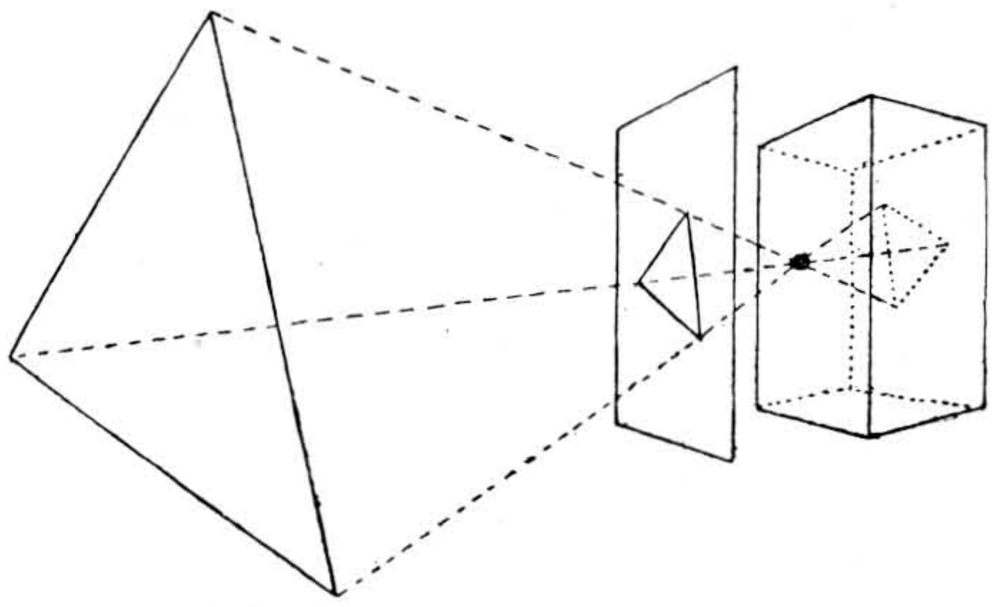

FIG. 13. PERSPECTIVE RENDERING BY THE CAMERA OBSCURA

conditions for the best results, which explains why the rules formulated by different experimenters show a certain amount of inconsistency.

For photographing distant objects, the optimum distance F from the aperture to the screen, or to the photographic plate which may be substituted for the screen, should lie between two limits calculated respectively by multiplying the square of the diameter d of the aperture by 625 (Abney; Dallmeyer), or by 1,250 (Colson; Combes),[1] all distances being expressed in millimetres. For example, with an aperture of 0·4 mm. diameter, the distance F should be between the two limits calculated as follows—

$$625 \times 0{\cdot}4 \times 0{\cdot}4 = 100 \text{ mm.};$$
$$1{,}250 \times 0{\cdot}4 \times 0{\cdot}4 = 200 \text{ mm.}$$

The sharpness of images photographed in this way, when the conditions are properly adjusted, is quite comparable to that of images given by soft-focus lenses, and particularly by anachromatic lenses.

A considerable angle of field can be covered by a pinhole, which can thus be advantageously used for photographing monuments in cases when it is not possible to go a sufficient distance away.[2]

The one disadvantage of this process is the relatively long exposures required. This, however, is of considerably less account now that

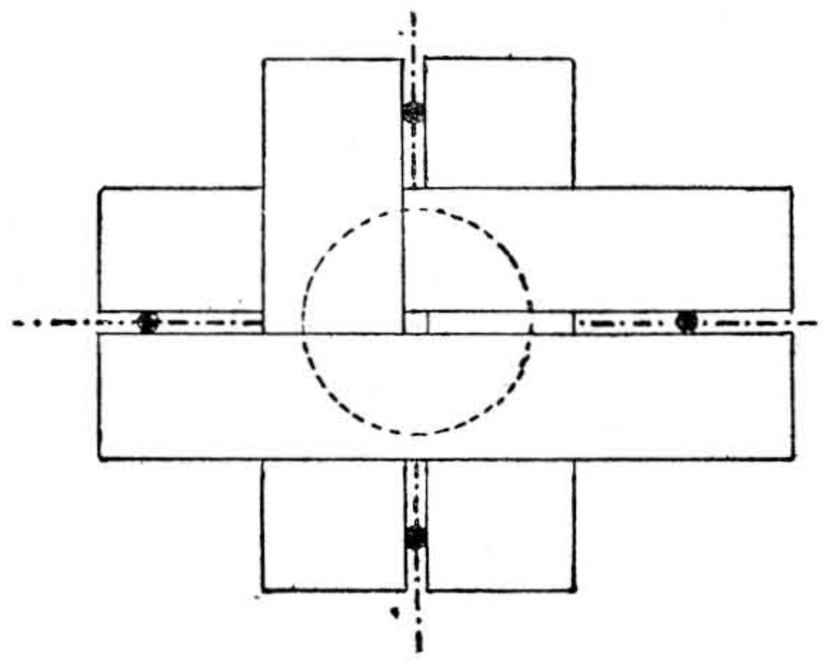

FIG. 14. MAKING THE APERTURE FOR PINHOLE PHOTOGRAPHY

we have at our disposal plates of such extreme sensitivity.[3]

39. Making a Pinhole. It is not very easy to obtain commercially metal plates having calibrated holes with clean edges suitable for

[1] The fact that the progressive decrease of the opening of a pinhole causes the sharpness of the image to pass through a maximum affords an example of the fact that geometrical optics (or, more exactly, collinear geometry), while able to indicate sufficiently the position and size of images, is quite unable to indicate the degree of their sharpness.

[1] This rule, which is partly experimental and partly theoretical, may be expressed thus

$$625\, d^2 < F < 1250\, d^2$$

In the case where it is desired to photograph very near objects the optimum extension is calculated in just the same way as when using an objective of focal length F under the same conditions (§ 60).

[2] A minute camera with four pairs of pinhole lenses, fitted in an oesophagic probe, has been used for photographing the internal walls of the stomach (Heilpern, Back and Veitschberger, 1930).

[3] The time of exposure on very rapid modern plates, for an open landscape photographed in summer in fine weather at mid-day, with an aperture of 0·6 mm. diameter and a principal distance (or extension) of 200 mm. (8 in.), is about 5 seconds.

pinhole photography. It may, therefore, be worth while briefly to describe how such an aperture may be made.

Experience has shown that there is no appreciable difference between the results given by pinholes of circular apertures and those of square apertures. One can, therefore, proceed to construct one as follows (Malvezin; Gabriely).

On a piece of card draw two lines in the form of a cross (Fig. 14). At their point of intersection cut out a circle of about $\frac{1}{2}$ in. diameter. Outside this circle stick four needles into the card (shown by the black circles), the diameter of the needles corresponding to that of the desired aperture, making sure to push them in far enough for their uniform cylindrical parts to be actually in the card. Next, fix with glue four bands of about $\frac{3}{8}$ in. width cut in metal foil (extra thin copper) or in aluminium leaf, as shown in the figure. There will now remain a square aperture with true edges, the length of each side being equal to the diameter of the needles. Remove the needles and protect the whole thing by another card with a piece cut out of the centre, glued on to the first. Blacken the exposed surfaces of the cards.

In order to make a circular aperture in a piece of metal foil resting on a strip of soft wood or on a piece of lead, a needle may be used as a punch. The needle should be stuck through the centre of a cork along the axis of the latter, cut off flush with one end, and the other end of the needle then cut about 1/25 in. from the other surface of the cork. This projecting end must be in the parallel cylindrical part of the needle. Now rub the protruding end on an oilstone until a plane and polished end with sharp edges is obtained. The hole is then made in the metal foil by giving the top of the cork a sharp blow. The edges of the hole thus made should be examined with a strong magnifying glass, and, if necessary, made perfectly smooth by means of the finest emery paper. To render it permanent, the metal foil may now be mounted, as described above, between two cards.

The aperture made in this way may be fixed to the front of a camera or any light-tight box which can be loaded with a plate or film. A card running in grooves makes a sufficiently good shutter, since the necessary exposures are long.[1]

[1] The image given by a pinhole is generally so faint that it cannot be easily examined on a ground glass screen. In order to find out the width of field which the pinhole gives, an aperture of about $\frac{1}{8}$th in. diameter may be temporarily substituted for it, or, failing this, a spectacle lens of focal length equal to the distance previously ascertained as optimum distance between aperture and screen for photographing distant objects.

CHAPTER VII

GENERAL PROPERTIES OF OPTICAL SYSTEMS; ABERRATIONS

40. Lenses. Lenses are masses of glass, bounded, by successive moulding, grinding and polishing operations, by two spherical[1] surfaces, or a spherical and a plane surface. According as the beam of light emerging from a lens held up to the sun has a diminishing or increasing cross-section, the lens is said to be *convergent* or *divergent*; convergent (or *positive*) lenses are thicker at the centre than at the edge (Fig. 15, I to III); on the other hand, the edges of divergent (or *negative*) lenses are thicker than the centre (Fig. 15, IV to VI).

The *optical* (or *principal*) *axis* of a lens is the straight line joining the centres of the two spherical surfaces, or, in the case of lenses having one surface plane, the perpendicular on to that surface from the centre of curvature of the other. In every combination of lenses the optical axes must coincide; this is known as a *centred system*.

41. Images Formed by Convergent Lenses. The elementary teaching of optics assumes an ideal simplicity in the instruments studied which is quite artificial (lenses of zero or negligible thickness; rays at small inclination to the axis passing through the lenses close to the axis, etc.). These mathematical fictions can only with difficulty be applied to the complex system of the photographic lens, often working at a very large aperture over a very extended field; it is all the more necessary to call attention to this point, as the application of the rules thus simplified may lead, by mathematical deductions which are strictly logical but ill-founded, to grossly erroneous conclusions.

When a convergent lens is placed at a suitable distance from a luminous object (or more generally any well-lighted object, stray light being excluded) it forms an inverted image which can be received sharply on a screen placed at a determined distance from the lens, this screen being, for example, a piece of white paper viewed by reflected light, or ground glass viewed by transmitted light.

42. A simple lens (reading-glass of large diameter or condenser lens), when used to project the image of a window on white paper pinned to the opposite wall but placed not exactly opposite to the window, provides us an excellent lesson in optics. The image is rather poor, being spoilt by a number of defects or *aberrations* (the only optical instrument that can give perfect images is the plane mirror). The images of the bars will show rainbow colours (*chromatic* aberration), and even if this aberration is removed by viewing through suitable coloured filters, the image is not sharp (*spherical* aberration due to the spherical form of the lens surfaces). The image can be improved by covering the lens with a piece of paper pierced with a circular hole smaller than the lens (*diaphragm* or *stop*), but is then not so bright. Further, it is seen that the images of the bars are more or less curved (*distortion*), the curvature varying with the position of the diaphragm. The lens requires to be moved towards or away from the paper in order to bring the centre and edges of the image successively into focus (*curvature of the field*). Finally, the image of the vertical bars is not sharp at the same time as that of the horizontal bars, especially at the edge of the image (*astigmatism*).

43. Real Images—Virtual Images. An optical image (such as we have considered in the previous paragraph), capable of being received on a matt screen, is called a *real image*.

When a convergent lens is placed at too short a distance from an object, it is impossible to form a real image of the object at any position of the screen, but on looking through the lens an upright, magnified image of the object is seen. Such an image, visible only through the lens by an observer looking in the direction of the object, is called a *virtual image*. All the observational instruments (telescopes, microscopes, etc.), adjusted for an observer with normal sight, give virtual images.

A divergent *lens* can give only a virtual, upright, diminished image of a real object, at a position closer to the observer than the object.

[1] Lenses have already been made with one or both surfaces non-spherical (toric, ellipsoidal, paraboloidal, etc.); some opticians consider that photographic lenses will not be further improved without recourse to such surfaces.

It may be added that lenses in everyday use (magnifiers, condensers, etc.) are generally not ground but moulded; moulding is sometimes used, with suitable precautions, to minimize the labour of roughing lenses of large size or very deep curves.

This property is utilized in the construction of "brilliant finders."

44. Optical Centre—Nodal Points. In the optical axis of a lens is always a point, called the *optical centre*,[1] such that every ray the path of which (or its prolongation) within the lens passes through this point has its paths outside the lens parallel. The interrupted path of this ray of light forms what is called a *secondary axis*. The centre can be inside the lens (Fig. 16A) or outside (Fig. 16B).[2] In the second case, it is not the effective path of the ray passing through the lens without angular deviation which meets this point; the optical centre is the intersection with the optical axis of the continuation of the internal part of the ray.

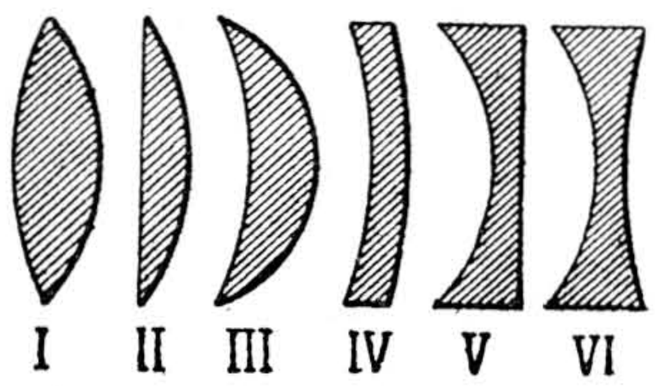

FIG. 15. TYPES OF LENS ELEMENTS

I. Biconvex lens
II. Plano-convex lens
III. Convergent meniscus
} Positive lenses

I. Divergent meniscus
II. Plano-concave lens
III. Biconcave lens
} Negative lenses

The intersections of the optical axis with the external parts of a secondary axis (or their continuation) define two points N and N' (Figs. 16A and 16B). In a perfectly corrected system the positions of these *nodal points*[3] is invariable, whatever the direction of the rays considered. If the optical centre could be realized, it would be found that each of the nodal points is its image formed by one of the surfaces of the lens, but on the assumption that this surface is bounded by an infinitely thick lens on one hand and by air on the other. Each of the nodal points is the image of the other formed by the lens or lens system considered.

In order to distinguish between the nodal points, the one towards which the secondary axes from different points of the object converge is called the *nodal point of incidence*; that from which the secondary axes diverge to the different points of the image is the *nodal point of emergence*.

The intersections PP' of the surfaces with the axis are sometimes called the *poles*.

45. Foci—Focal Length. The image of an infinitely distant point (e.g. a star) towards which the optical axis of a lens is pointed, is the *focus* of that lens. From considerations of symmetry this is necessarily situated on the optical axis. As the lens can be turned with either face to the point-object, it possesses two foci F and F' (Fig. 17). In the case of a convergent lens the foci are the nearest points to the lens at which a real image can be formed of a real object. The word "focus" recalls the use of "burning glasses," the concentration of rays being a maximum in the neighbourhood of the focus so that tinder or other inflammable material can be ignited there when the lens is directed towards the sun.

When the two surfaces of the lens are in free contact with the air, the distance of each of the foci from the corresponding nodal point is the same; this distance ($NF = N'F'$) is called the *focal distance* or *focal length*.[1] For a rough approximation and where a thin lens is considered, the nodal points can be ignored and the focal length reckoned from the optical centre C. In many lenses the optical centre is close to the diaphragm. Telephoto lenses are the chief exception.

The focal length of an optical instrument is one of its essential characteristics.

46. Chromatic Aberration. The refraction of a ray of light passing from one medium to another (from air to glass, or vice versa) at non-normal incidence has not the same value for different colours. Therefore, when a beam of white light (§ 1) traverses a lens, the sharp images formed by light of different colours do not coincide. The rays which are refracted most, ultra-violet and violet, form their images nearer to the lens than those which are refracted

[1] To determine the position of the optical centre it is sufficient to draw two parallel radii in the plane under consideration, one for each surface; the straight line joining the intersection of these radii with their respective surfaces cuts the optical axis at the point C, the optical centre. (Figs. 16A and 16B.) If tangents are drawn at the points of intersection of the two parallel radii with the surface a parallel glass plate is formed, which coincides with the lens itself at the points of contact. Now a parallel plate produces no external deviation, so that the exterior parts of a single ray through the centre are parallel.

[2] Note that the lenses drawn in Figs. 16A and 16B have the same radii of curvature and the same distance between centres.

[3] Where the exterior surfaces of an optical instrument are bounded by the same medium (air in the case of a photographic lens) the nodal points are identical with the *principal* or *Gauss* points. This is not the case with an immersion microscope objective where the outside surface touches a liquid in contact with the preparation.

[1] The focal length is sometimes wrongly called the *focus*. .

less, green and red.[1] (Fig. 18.) There is thus an infinite number of images each corresponding with one of the component radiations. In particular the position of the foci (images of infinitely distant points on the axis) and of the nodal points (images of the optical centre) vary with rays of different colours, as does also the focal length.

The practical consequence of this is that whatever be the position of the viewing screen or the photographic plate on which the image is to be recorded, the sharp image corresponding with the apex of one of the cones is surrounded by bright rings corresponding with sections of all the other cones. If the position of the screen has been determined visually, and if the image is photographed with it in the same position, the phenomenon is increased by the fact that the focus chosen is the best for the yellow-green images, which are the brightest visually, and consequently will not all agree with that for the ultra-violet and violet images, usually the most active on a photographic plate.[2]

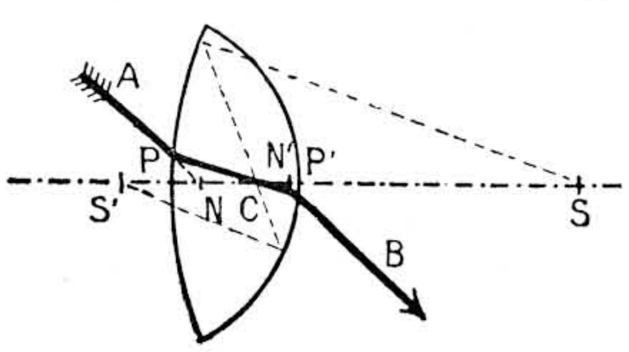

FIG. 16A. OPTICAL CENTRE IN LENS

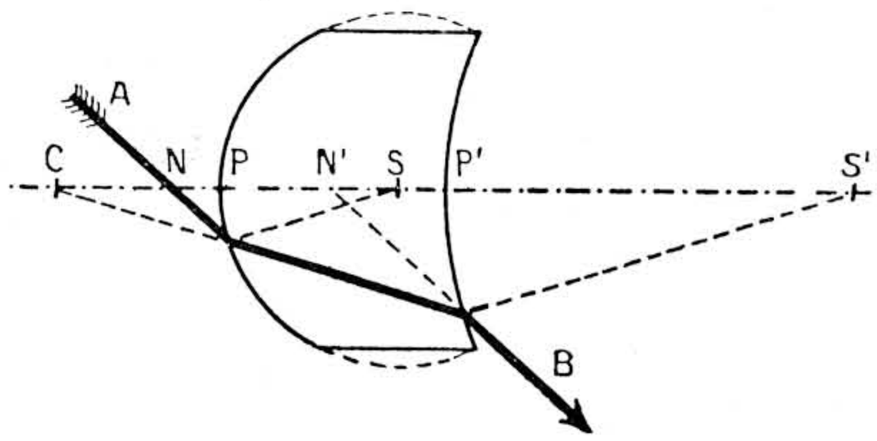

FIG. 16B. OPTICAL CENTRE OUTSIDE LENS

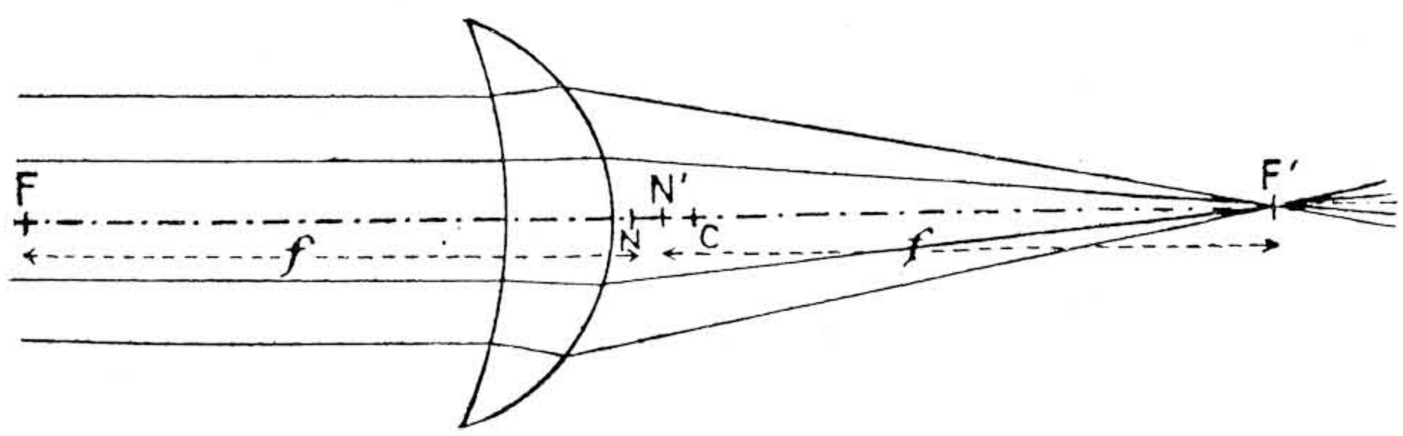

FIG. 17. FOCUS AND FOCAL LENGTH

This inconvenience can be minimized by displacing the photographic plate by the correct amount after visual focussing, or by using, both for focussing and photographing, a coloured filter which transmits only a small portion of the spectrum. Generally it is preferable to correct the chromatic aberration more or less completely by the use of at least two glasses of different characteristics, usually a crown and a flint, the use of different material allowing the images formed by two different colours to be united. Lenses for photography are generally corrected for *D* (yellow) and *G* (blue-violet) rays of the solar spectrum, and are then called *achromatic* (from Greek, meaning colourless). For some work, in particular colour photography,

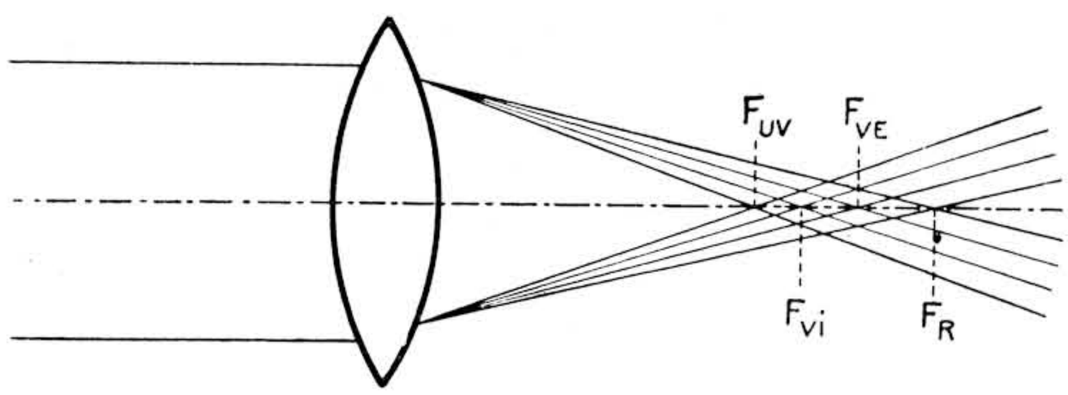

FIG. 18. CHROMATIC ABERRATION

such a correction is insufficient, and coincidence of the nodal points and foci for three different colours is aimed at, generally by the employment of at least three glasses. A lens so corrected is

[1] Calling n the mean refractive index of glass and n' and n'' the values of the index for the two rays considered, the difference of focal length ($f'-f''$), expressed in terms of the mean focal length f, is $f'-f'' = \frac{n'-n''}{n-1} \cdot f$. (longitudinal chromatic aberration).

Considering the spectral lines *G* and *E* (corresponding with the maximum photographic activity on ordinary plates and the maximum physiological activity respectively), this expression represents about 0·14 per cent of the focal length for *crowns* and 0·16 per cent for *flints*, the general designations of two classes of optical glasses.

[2] This defect is usually referred to by saying that such a lens possesses a *chemical focus* as distinct from the visual focus.

called *apochromatic*[1] (or *with reduced secondary spectrum*). Fig. 19 is drawn for a photographic lens of 16 ft. focal length (in order that the aberration can be easily read), and indicates approximately the *displacements* (distances from the mean focal plane PP') of the images formed by different spectral regions.

Achromatic and apochromatic lenses are not usually corrected for infra-red. When photographing with infra-red emulsions it is therefore necessary to rectify the focussing, this correction being made once and for all by methodical trial and error for each lens. As a rule the extension of the camera must be increased, after visual focussing, by 0·3 to 0·4 per cent of its value.

For the study of other aberrations we shall suppose that chromatic aberration is eliminated by means of a colour filter.

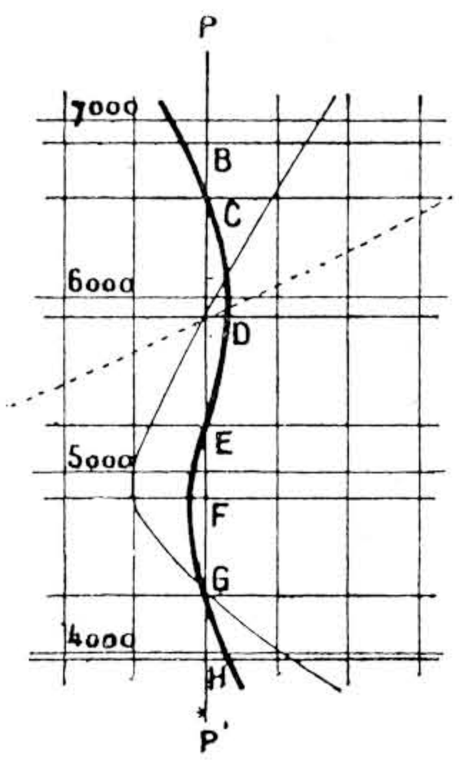

FIG. 19. CHROMATIC ERROR OF VARIOUS LENSES
(16 ft. focal length)
Apochromatic
Achromatic
Non-achromatic

47. Spherical Aberration. Among the aberrations due to the spherical curvature of the lens surface, the name spherical aberration is usually confined to that shown by light-rays at small inclinations to the axis.

If we suppose a lens divided into zones concentric to the optical axis, which can easily be realized in practice by means of diaphragms with annular apertures (Fig. 20) centred on the axis, the focal length of a convergent lens is found to diminish progressively from the central zone to the edge. For any position of the screen or photographic plate between the extreme foci F and F''' (Fig. 21), the image of a luminous point will be a circle, the brightness of which diminishes from the centre to the edge.[2]

[1] In the meaning given to this word by Abbe, an apochromatic objective ought also to be *aplanatic* (§ 47) for two colours.

[2] The points of intersection of successive pairs of rays determine a surface, the form of which resembles the bell of a trumpet, along which there is a concentration of light. This can easily be seen by blowing a smoke cloud into the beam or placing a screen in the beam close to the focus and nearly parallel with the axis. This surface, corresponding with a beam of light having aberration, is generally called the *caustic* of the beam.

This aberration can be diminished by limiting the surface of the lens to a single narrow zone (in practice, the central zone) by using a diaphragm, but it is obvious that the position of the sharpest focus will depend on the aperture of this diaphragm. The spherical aberration can also be diminished by suitable choice of curvatures of the lens.[1]

As a rule, spherical aberration is corrected by making the images produced by two zones of the lens coincide, generally the central zone and the extreme (marginal) zone, or one close to it. This correction, obtained by the employment of a more or less complex system in place of the single lens, is never absolute. In order to show the importance of residual aberrations a curve is drawn in the principal section, of which each point is defined (Fig. 22) by the intersection of the incident ray with a line drawn perpendicular to the axis through the corresponding focus (Fig. 22 indicates the aberration considerably exaggerated. It is usual to magnify the aberrations, which in this case are those of a 4 in. lens, by 20).

FIG. 20. DIAPHRAGM TO SHOW SPHERICAL ABERRATION

An optical system rigorously corrected for this aberration is said to be *aplanatic*[2] (Greek

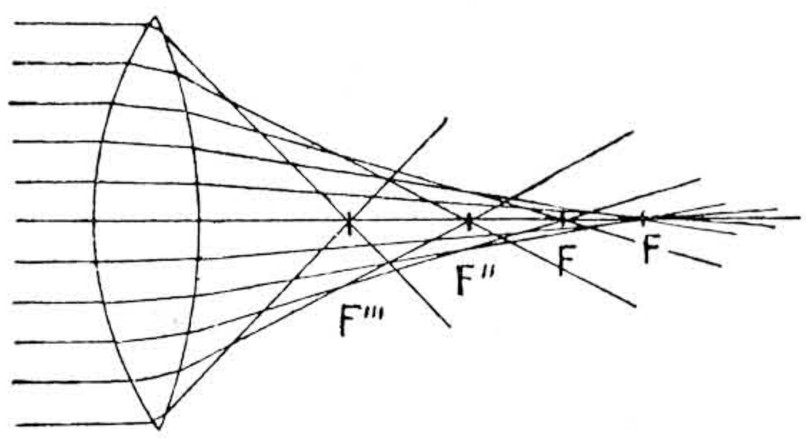

FIG. 21. SPHERICAL ABERRATION

= free from error). As a matter of fact, no photographic lens is rigorously aplanatic. It is

[1] Spherical aberration is at a minimum for a biconvex lens of which the surface on which the light is incident has a radius of curvature $\frac{1}{6}$ that of the surface of emergence (for glass of mean refractive index 1·5). This minimum aberration is only 64 per cent of that of an equiconvex lens of the same focal length. Spherical aberration is at a maximum in the case of a meniscus.

[2] A regrettable confusion due to the syllable *-plan*, has often arisen owing to the erroneous employment of this term to designate a lens free from curvature of field, i.e. giving a plane image of a plane object.

possible to correct spherical aberration only for certain object distances, which are selected as being those at which the lens will most frequently be used, *according to the purpose for which it is designed*. In practice, the correction is sufficient for most requirements at intermediate distances. We shall see, however, that the residuals of this

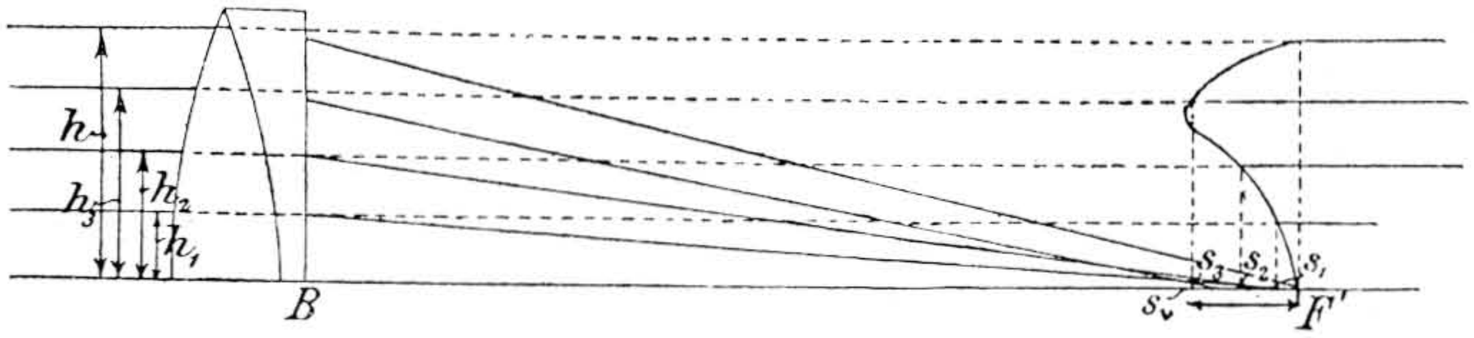

FIG. 22. CHART OF SPHERICAL ERROR

aberration determine the distortion of the image.

48. Astigmatism. Astigmatism (Greek = absence of point) is an aberration which is seen in oblique pencils, and arises from the assymmetry of the refraction in different sections of the beam; the most obvious effect is the concentration of light into two distinct foci.

To explain this effect, at least diagrammatically, consider the section of the lens made by a plane containing the secondary axis $AA'B'B$ of an oblique pencil (Fig. 23A), and also the sequence of sections of the lens and of the pencil by planes perpendicular to the first plane and

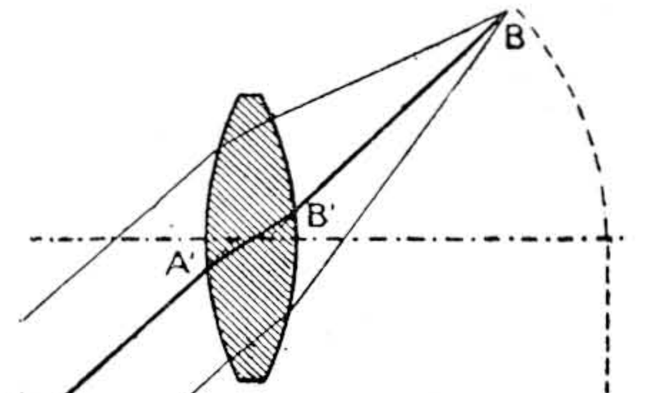

FIG. 23A

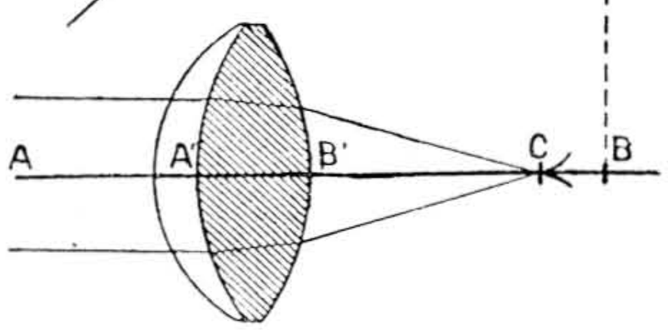

FIG. 23B

ABERRATION OF OBLIQUE (A) AND AXIAL (B) RAYS

containing successive elements of the secondary axis, the different sections being projected on to the middle plane containing the interior portion $A'B'$ of the secondary axis (Fig. 23B). In the first case (*meridian section*), the curvatures of the lens are less pronounced than in the second case (*sagittal section*). The point B, to which the rays of the meridian section converge, is then farther from the lens than the point C, to which the rays in the sagittal section converge.

If a screen (white paper, ground glass, etc.) is held perpendicular to the optical axis and gradually moved away from the lens, the beam emerging from the lens and originating in a single point source will describe on the screen successively the following shapes: a circle (when the screen is in contact with the lens); ellipses becoming flatter and flatter with their long axes in the meridian plane, which degenerate to a short straight line in that plane; ellipses orientated as before but becoming more and more circular; a circle; ellipses getting flatter and flatter, with their long axes in the sagittal plane; a short straight line in the sagittal plane; ellipses again.[1] Fig. 24 represents this succession of " images " of a point source of light, considerably exaggerated.

49. Tangential and Radial Images. The fact that a stigmatic pencil gives a double image, viz. two straight lines (*focal lines*) in different planes when refracted by an astigmatic system, gives the following easily-observed phenomenon. If an object consists of circles, concentric with the axis, and radii thereto, the elements R of each point of a radius will merge into one another and give a sharp image (at least for a certain length), while the elements T will give a blurred image (Fig. 25). Conversely, the elements T will merge into one another and give a sharp image of the circles (or short tangents to them). For this reason the images R and T are often called radial (or sagittal) and tangential images respectively. If the two focal lines are not widely separated from one another, or if the angular aperture of the beam is sufficiently small, a more or less homogeneous image will be produced if the screen is placed at an intermediate position where the pencil gives a circular patch (*circle of least confusion*, C, Fig. 24).

[1] This experiment can be best carried out by using an ordinary chemical flask filled with water as the " lens," as it will be slightly assymetric; or one of the elements of a condenser may be used.

The locus of the radial images of infinitely distant points (e.g. stars) given by a lens is a surface S_r (Fig. 26), which (at least in the central region) is generally concave to the lens; the tangential images lie on another surface S_t, generally less curved than S_r. These two surfaces (*focal surfaces*) have a point of contact at the focus F.

The radial and tangential images of points in any plane perpendicular to the optical axis form analogous surfaces.[1]

In order to represent the astigmatism of a lens, a graphic method is used similar to that already employed for spherical aberration (Fig. 22). The displacements of the two focal surfaces (multiplied by four to facilitate reading of the curves) for a lens of 4 in. focal length are plotted on the horizontal scale, while the angle made by the secondary axis with the principal axis is plotted vertically on the scale of 0·1 in. to the degree. Figs. 27A and 27B, from von Rohr, show respectively the astigmatism curves for a lens partly corrected for astigmatism (Orthostigmat type II) and for one well-corrected (Planar).

[1] In the case of simple lenses, the forms which reduce spherical aberration to a minimum are those which give a maximum of astigmatism, and vice versa.

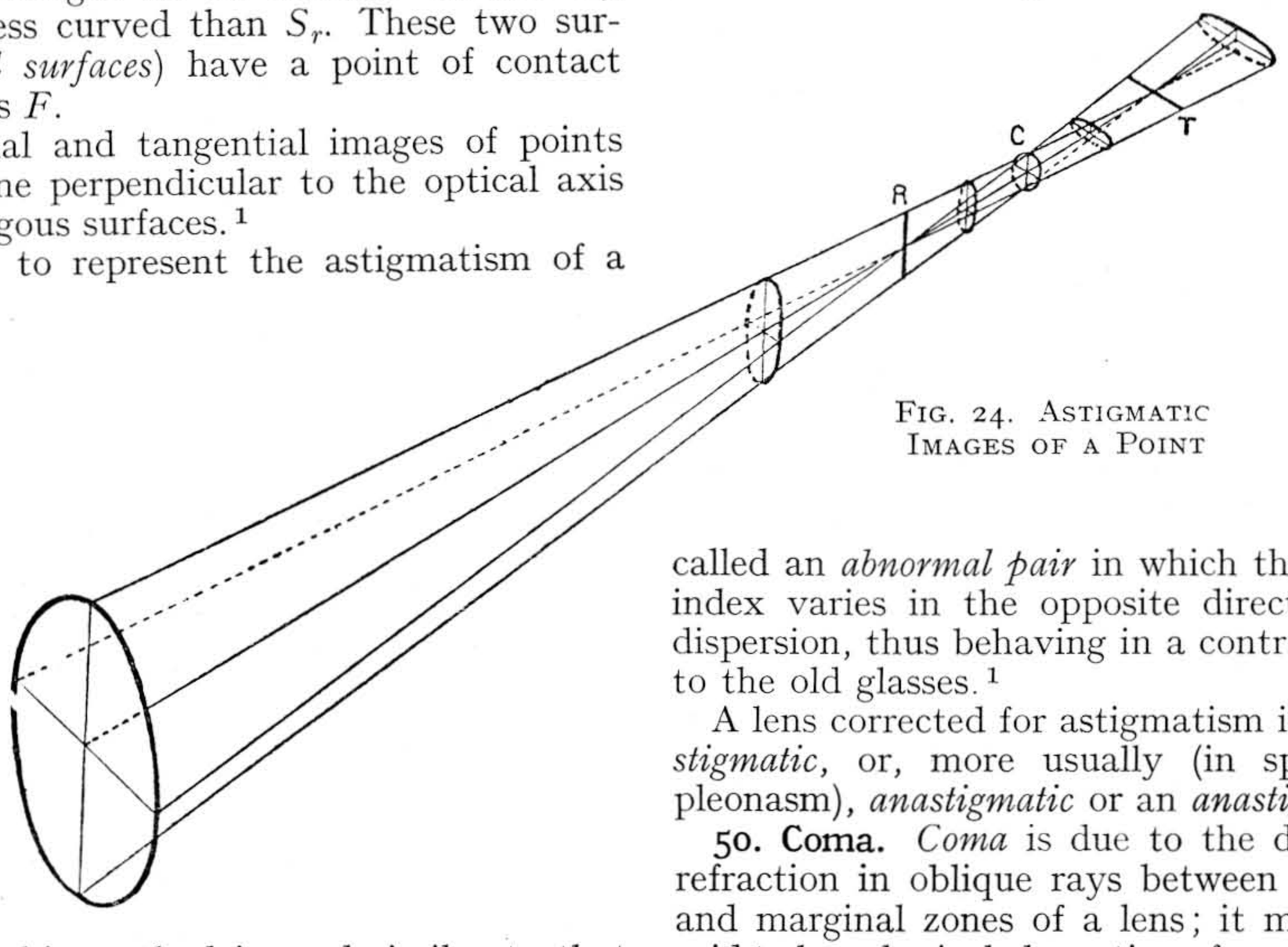

FIG. 24. ASTIGMATIC IMAGES OF A POINT

FIG. 25. ASTIGMATISM OF CONCENTRIC CIRCLES

Correction of astigmatism is only possible by the employment of at least three separated lenses, or, if the lenses are to be cemented in groups, at least four lenses of different material. Two at least of the glasses must form what is called an *abnormal pair* in which the refractive index varies in the opposite direction to the dispersion, thus behaving in a contrary manner to the old glasses.[1]

A lens corrected for astigmatism is said to be *stigmatic*, or, more usually (in spite of the pleonasm), *anastigmatic* or an *anastigmat*.

50. Coma. *Coma* is due to the difference of refraction in oblique rays between the central and marginal zones of a lens; it may thus be said to be spherical aberration of pencils traversing the lens obliquely. On account of dissymmetry between the path of the rays in the meridian and sagittal sections (already referred to in the explanation of astigmatism), an unsymmetrical patch is formed instead of a point

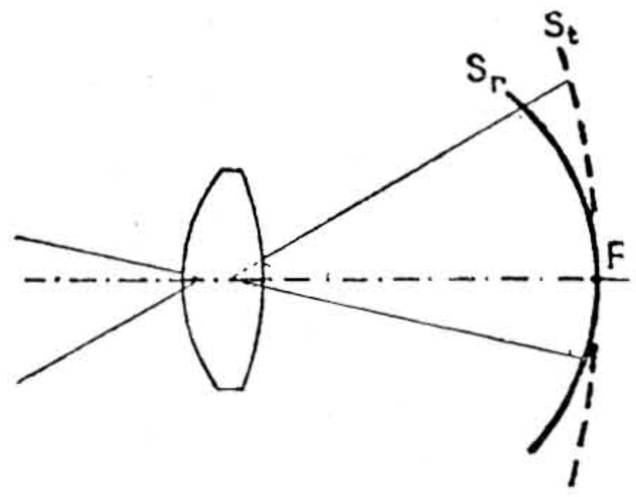

FIG. 26. ASTIGMATIC FOCAL PLANES

[1] The first glasses to be produced which allowed of correction of astigmatism (glasses with small dispersion and high refractive index) were made experimentally in France by Feil in 1880; their manufacture was commenced in Germany towards 1890 and for a number of years gave a pronounced superiority to German optics, the legend of which still persists although English and French opticians have for a long while caught up and surpassed their German rivals.

image, the appearance somewhat resembling the image of a *comet* (whence the name), the tail of which is generally directed away from the optical axis (*outward coma*).

Coma is often associated with astigmatism, but whilst in the case of a lens incompletely corrected, astigmatism attains a maximum and then decreases as the inclination of the rays to the axis increases, coma steadily increases. Also, being of zonal origin, coma is much more

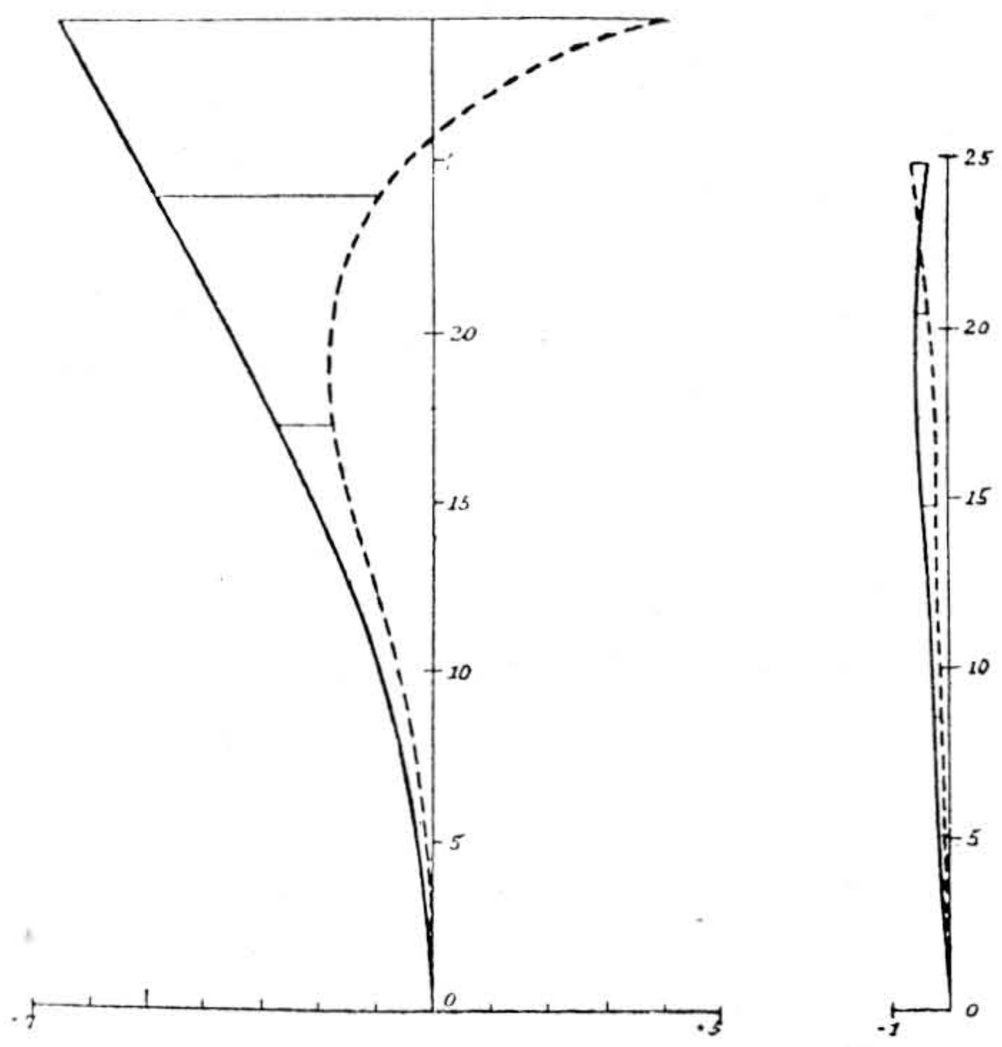

FIG. 27A FIG. 27B

ASTIGMATIC FIELDS (VON ROHR)

rapidly reduced by the use of a small diaphragm than is astigmatism.

Coma is seen in its characteristic form chiefly when long exposures are made on an object having a number of brightly illuminated points off the axis, the tails sometimes stretching a great distance.

Fig. 28, taken from S. P. Thompson, shows the cross-section of the beam of light by a plane perpendicular to the axis in the neighbourhood of the normal position of the image of a point formed by a plano-convex lens, having a diaphragm like that of Fig. 20, but containing several annular apertures.[1]

51. Curvature of the Field. For reasons of symmetry, it is easy to see that the images of infinitely distant points given by a sphere of glass would lie on a spherical surface concentric with that of the spherical lens, and of radius equal to the focal length. In these circumstances the image of a near plane would be a surface of still greater curvature.

The focal surface of a lens of old type (achromatics, rectilinears, symmetricals) always has a very marked concavity towards the lens, the mean radius of curvature being between 1·5 times and twice the focal length.[1]

In an astigmatic objective the surface that is to be considered as the locus of the image is neither the radial nor the tangential surface, but an intermediate surface containing the circles of least confusion (*C*, Fig. 24).

The practical consequence of curvature of the field is that, if a plane held perpendicular to the axis is displaced relatively to the lens, the position corresponding with maximum sharpness of the central region of the image is more or less distant from that corresponding with maximum sharpness of the marginal regions of the image. In spite of

FIG. 28. COMA
(S. P. Thompson)

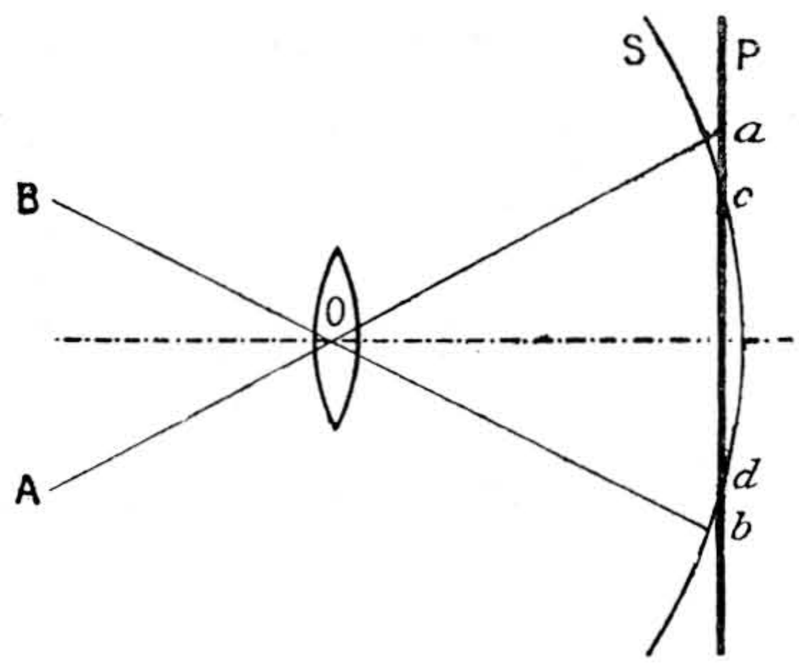

FIG. 29. CURVATURE OF FIELD

the fact that (as we shall see) there is a latitude in the position of the focussing screen or photographic plate (depth of focus), in focussing the

[1] If a biconvex lens giving minimum spherical aberration (§ 47, note) is compared with a meniscus of the same focal length with its convex surface towards the incident light, it is found that the meniscus, while giving very pronounced spherical aberration, has much less coma at an angle of incidence of 20°.

[1] The condition that must be fulfilled to flatten the field is incompatible with the condition for achromatism, unless an abnormal combination of glasses (§ 48) is used.

image sharp, curvature of the field sets a limit in every case to the useful angle of field of the lens. Fig. 29, which is essentially only diagrammatic, shows the impossibility of having on a plane P a sharp image formed on the surface S.

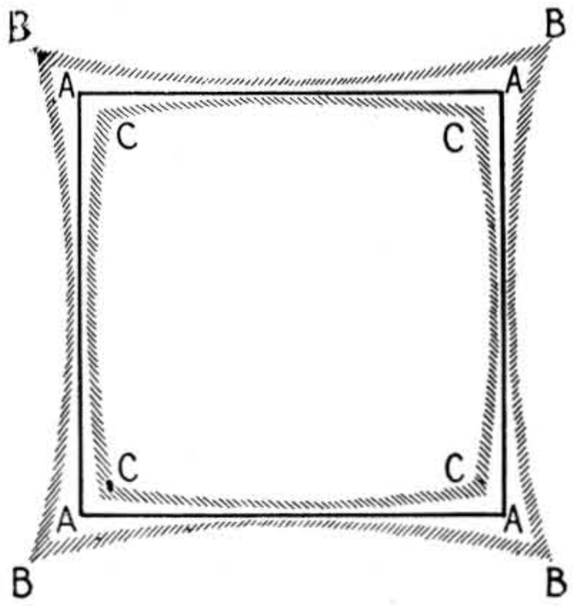

FIG. 30. TYPES OF DISTORTION

By adjusting the position of P to give a sharp focus for the intermediate zone cd, the central and marginal (ab) parts of the image can be considered *nearly* sharp. The useful field of the lens is then limited to the angle AOB.

The curvature of the field of anastigmats is always very much less than that of ordinary objectives. In the least favourable cases the radius of curvature of the field is at least four times the focal length.[1]

52. Distortion. It has long been known that the image of a square $AAAA$ centred on the axis by a meniscus lens will be either a *pincushion* shape $BBBB$ (Fig. 30 or) *barrel* shaped $CCCC$, according to the position of the stop relatively to the lens. The deformation is greater the greater the angle the square subtends at the lens. Fig. 31 explains in a simple manner the mechanism of this phenomenon. According to the position of the stop, different portions of an oblique beam possessing aberration are used for forming the image, so that the concentration of light occurs at different distances from the axis, whilst for a pencil parallel to the axis the position of the image is independent of the position of the diaphragm. The more or less blurred images $BBBB$ and $CCCC$ result from the selection by the diaphragm of certain rays which, in its absence, would give an extremely blurred image combining these two partial images.[1]

The distortion is reversed if the stop is placed behind instead of in front, from which the simple conclusion was arrived at that by placing the stop in the plane of symmetry of an objective formed of symmetrical elements the distortion would be zero. Although, in fact, distortion is reduced under these conditions, it will only be zero if such an objective (said to be *rectilinear*) is used symmetrically, i.e. when producing an image of a plane surface the same size. In fact, a

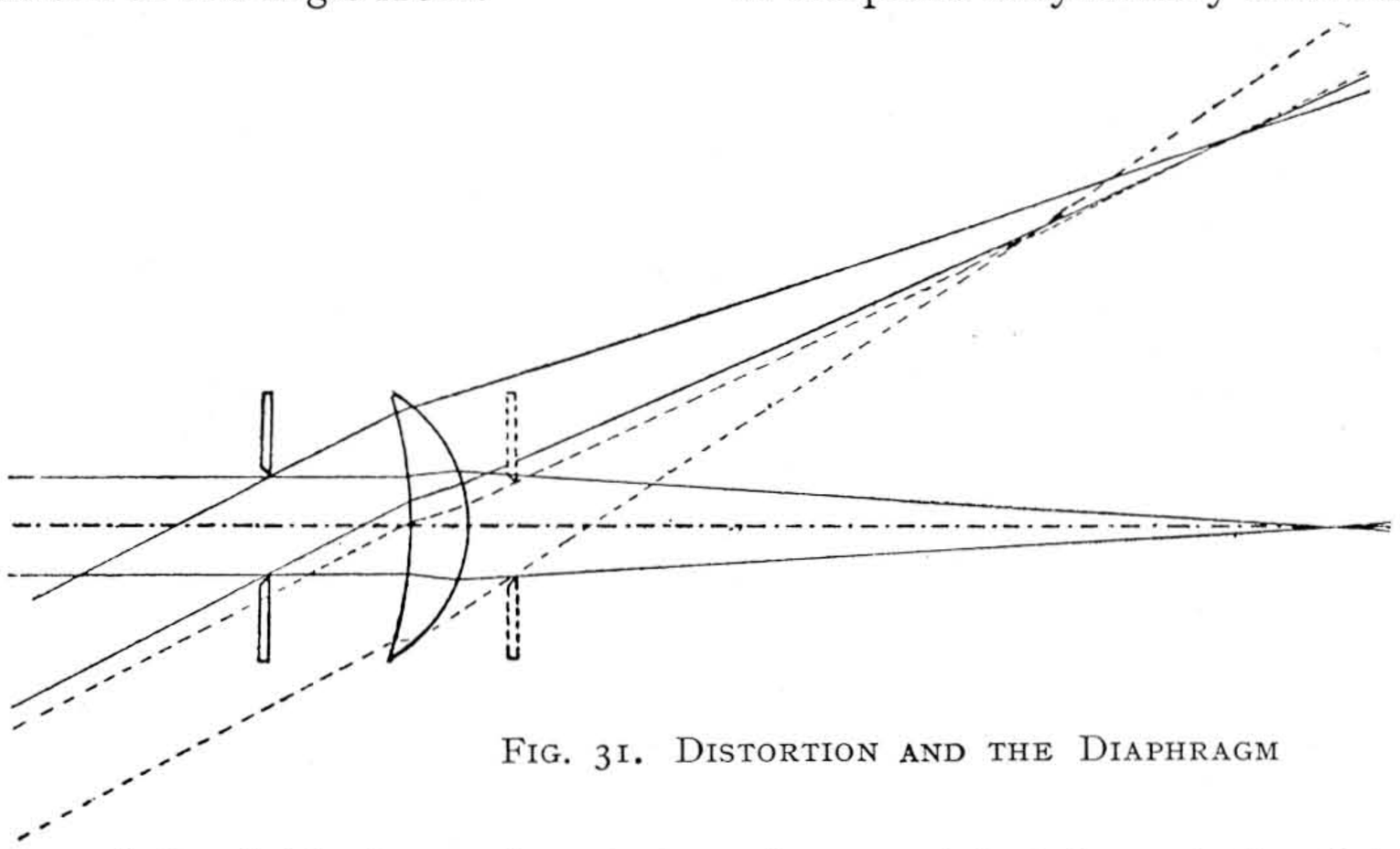

FIG. 31. DISTORTION AND THE DIAPHRAGM

[1] For astronomical work of great precision (Harvard Observatory) the plates are bent into a spherical form, of curvature equal to that of the focal surface (which is very small). The glass plate, which is thin, is bent by suction against a concave support of cast iron. An earlier method of compensation was to place a plano-concave lens against the plate to lengthen the focus of the marginal parts of the image (Piazzi Smyth's corrector).

[1] In a lens incompletely corrected for spherical aberration of oblique pencils, a displacement of the diaphragm in its own plane will produce similar deformation of the image, which will not be symmetrical if the diaphragm is not correctly centered. The same effects may arise with any aperture limiting the beam of light, e.g. the shutter, when this occupies a position other than the normal plane of the stop, or the plane of the focussed image.

symmetrical lens, when used with an angular field of 90° in the photography of distant objects, gives quite distinct pincushion distortion.

Actually, distortion is a very general phenomenon, being present (although to only a small extent) in lenses corrected for astigmatism and curvature of the field, and arises from spherical aberration of the nodal points, i.e. from a slight variation in the position of these points according to the obliquity of the axes considered. Fig. 32, where the nodal point aberration is considerably exaggerated, shows that in these circumstances the images *abcd* of equidistant points *ABCD* cannot themselves be equidistant, the *scale* of the image (ratio of the object to the image) varying progressively from the centre to the edge. With pincushion distortion the scale increases from centre to edges, and the distortion is said to be *positive*; with barrel distortion (*negative*) the scale decreases from the centre to the edge.

Aberration of the nodal points, like all manifestations of spherical aberration, is reduced by using smaller stops, which at the same time reduce the distortion.

With an unsymmetrical objective, the optician can remove distortion completely by a proper choice of the constructive elements at his disposal,[1] for a given scale of image, chosen at will, or, what amounts to the same thing, for a definite object distance (e.g. for an infinitely distant object in lenses designed for aerial photography or landscape work; object distance of several yards for portrait lenses; scale approximately unity for process lenses). For every other distance or scale, distortion will be present (the more so with large-aperture lenses), although it may remain so small as only to be detected by laboratory methods.[2]

Distortion, like the other aberrations, can be represented graphically. In Figs. 33A and 33B, drawn respectively for a symmetrical and an unsymmetrical lens respectively (both by the same maker, of equal excellence, and of the same aperture), the divisions of the vertical scale correspond to the angles made by the secondary axes with the principal axis, while the horizontal scale indicates percentage variation of scale, positive (+) or negative (–). Two curves are shown for each lens, one for objects at infinity (∞) and the other for an object photographed at a reduction of one-tenth (from E. Wandersleb).

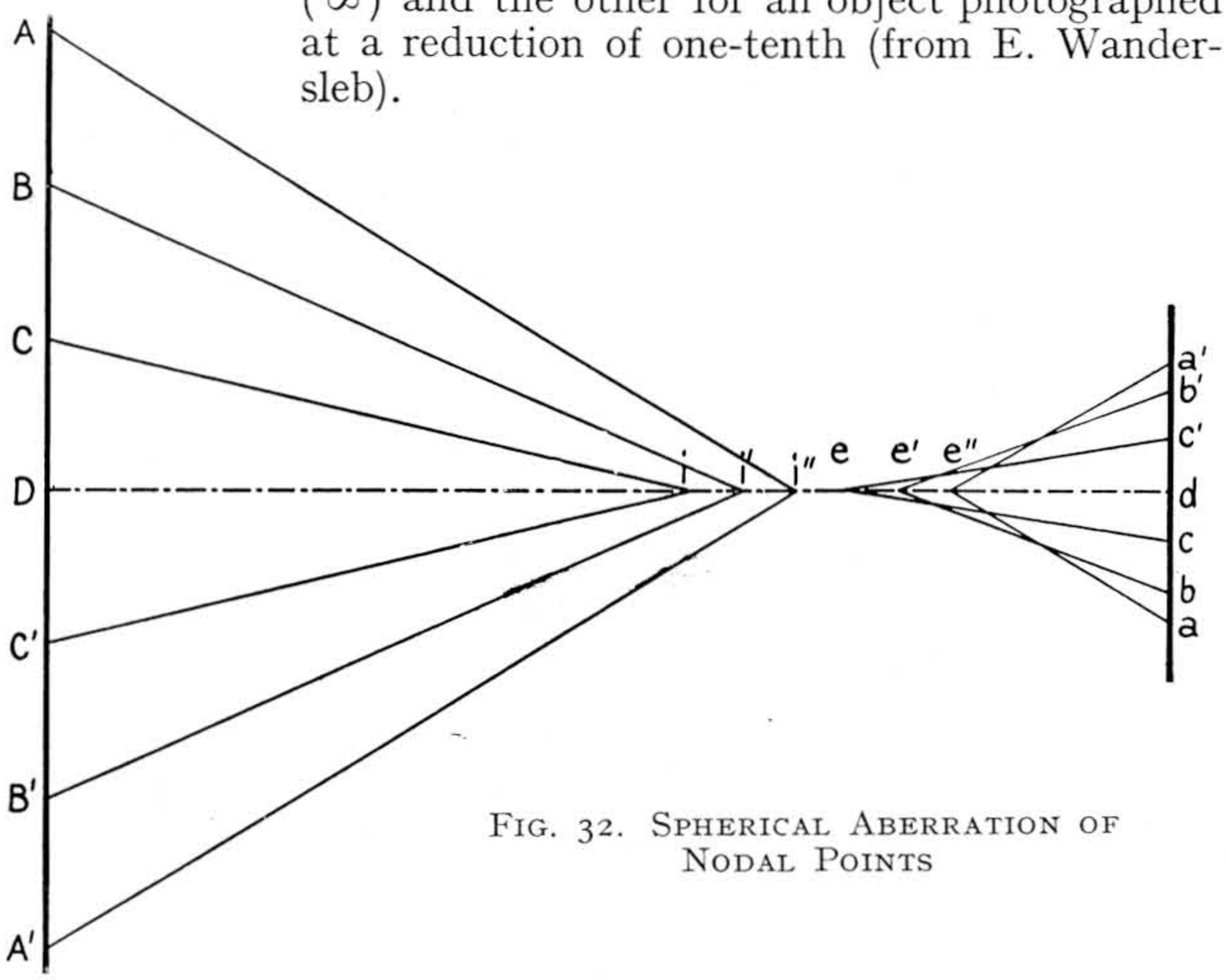

FIG. 32. SPHERICAL ABERRATION OF NODAL POINTS

53. Influence of Diaphragm Aperture on the Different Aberrations. The employment of diaphragms with smaller apertures always (at any rate up to a certain limit) improves the definition given by a lens which is incompletely corrected, but the degree of improvement is different for the different aberrations.

Chromatic aberration varies almost directly as the diameter of the stop; spherical aberration on the axis varies as a rule almost as the "cube" of the diameter (the product of the diameter multiplied by itself twice). Astigmatism and curvature of the field are approximately proportional to the diameter and the square (product when multiplied by itself) of the slope of the secondary axis to the optical axis; coma is proportional to this slope and to the square of the diameter, approximately.

[1] It must not be inferred generally from this remark that because a lens is unsymmetrical it is necessarily freer from distortion than a symmetrical lens. A badly designed unsymmetrical lens has, on the contrary, more pronounced distortion than the worst of the symmetrical lenses. Distortion also varies from lens to lens in the same series.

[2] The name *orthoscopic* has sometimes been given to images free from distortion, but, strictly speaking, an image is free from distortion only if the sharp images of objects at infinity, or lying on a plane, themselves lie entirely on a plane.

As a general rule, it can be stated that no lens is completely corrected, but fortunately the blur produced instead of the ideal point image is not of uniform intensity of illumination over the area derived from geometrical considerations. There is generally a maximum intensity over a small fraction of the area of the blur, so that the photographic image is always better defined when the exposure is a minimum than when a prolonged exposure is given, which allows the poorly illuminated parts of the image patch to be recorded on the plate. These variations of sharpness with exposure are much more apparent with a badly corrected lens.

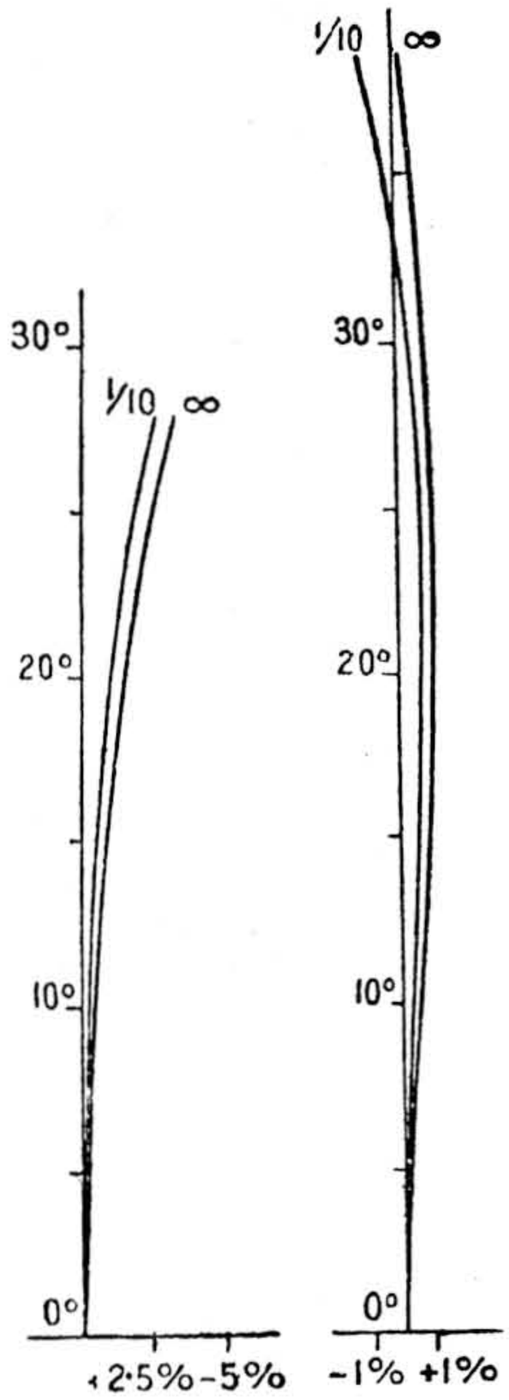

FIG. 33A

FIG. 33B

DISTORTION OVER FIELD OF IMAGE

As has been indicated, there is a limit beyond which the diaphragm aperture cannot be diminished with the hope of reducing aberrations. Till now we have considered the rays of light obeying the laws of geometrical optics, which is a perfectly legitimate convention, since the results agree with experiment when pencils of light of sufficient angular aperture are considered, but when the aperture is reduced to less than 0·04 in., or less than about one-seventieth of the distance from the image, geometrical optics fails. By reason of the propagation of light in concentric waves, the image of a point formed by an optical instrument is always a patch, even if the instrument is perfectly stigmatic and aplanatic. The distribution of light in such an area is shown diagrammatically on an enlarged scale in Fig. 34 for the image of a point on the optical axis (bright disc surrounded by concentric rings alternately black and faintly bright). The diameter of this *diffraction disc* is greater the narrower the pencil of light, and the photographic definition would be spoilt if the limits mentioned above were passed. An exceedingly minute diaphragm would produce an image hardly better than that given by a pinhole.

Astronomers, and especially microscopists, know that to get an image as sharp and detailed as possible it is necessary to use lenses of large aperture, the *limit of resolution* (minimum distance between two parallel lines that can be reproduced separately) is smaller the larger the aperture used.[1]

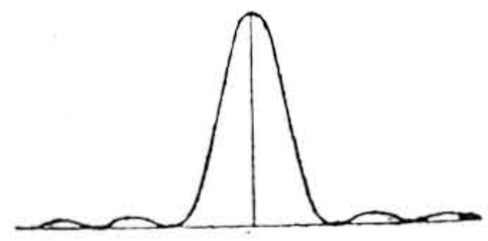

FIG. 34. DIFFRACTION IMAGE

54. Distribution of Light in the Field. No objective can give a uniformly bright image of a uniformly illuminated surface, even if this is of small extent.

This can be explained by comparing the effects of a beam directed along the axis with one in an oblique direction, forming the images P and P^1 respectively (Fig. 35). Viewed from the point P the lens has the appearance of a uniformly illuminated circle, whilst viewed from P' the appearance is an ellipse, the area of which is smaller than that of the circle by an amount

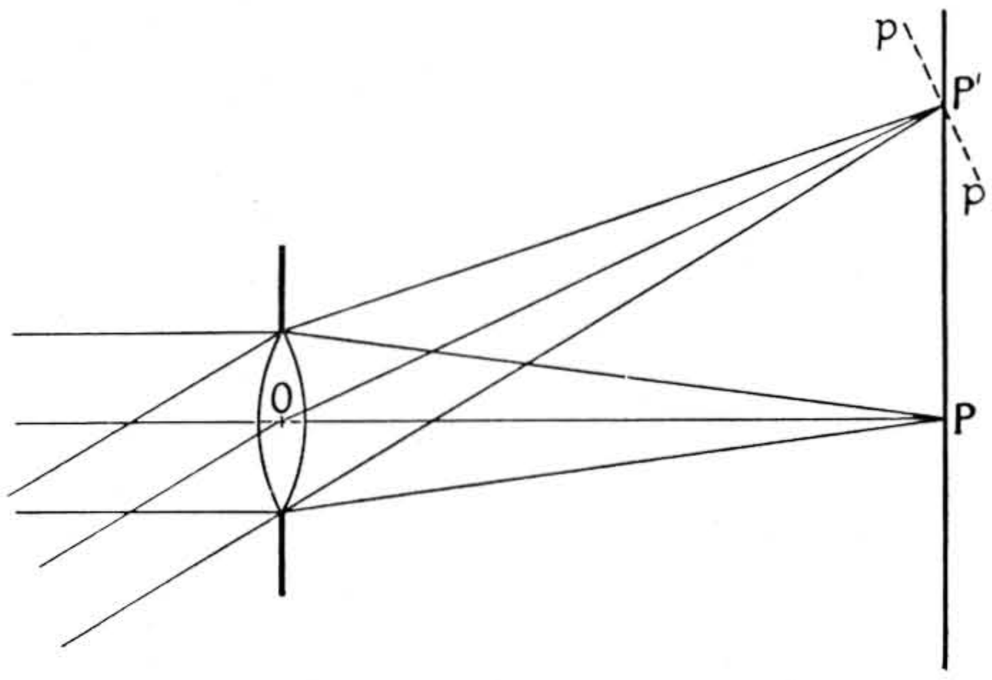

FIG. 35. MARGINAL INTENSITY OF IMAGE

which increases with the obliquity. Furthermore, P' is further from O than P, and, as is well-known, the illumination diminishes when the source of light is farther away. Finally, the oblique beam illuminates the screen or sensitive

[1] The smallest angle subtended by two points that can be separated by a photographic lens is given by $a\lambda/D$, where a is a coefficient the value of which is nearly 1, λ is the wave-length of light used, and D the diameter of the effective aperture of the lens (P. Nutting, 1909).

The earlier experiments of Foucault and Dawes showed that at the *centre of the field*, the limit of resolution of a perfectly corrected lens, in seconds, is equal to the quotient of 13 (the mean of the values 14 and 12 given by these authors) by the diameter of the aperture in centimetres; in practice, the limit is, in favourable circumstances, slightly less than the calculated value.

surface in the plane PP', perpendicular to the optical axis, less than it would a screen placed at pp, perpendicular to its mean direction.

Combining the effects of these different causes it is possible to calculate the maximum illumination at different angles.[1] The numerical values

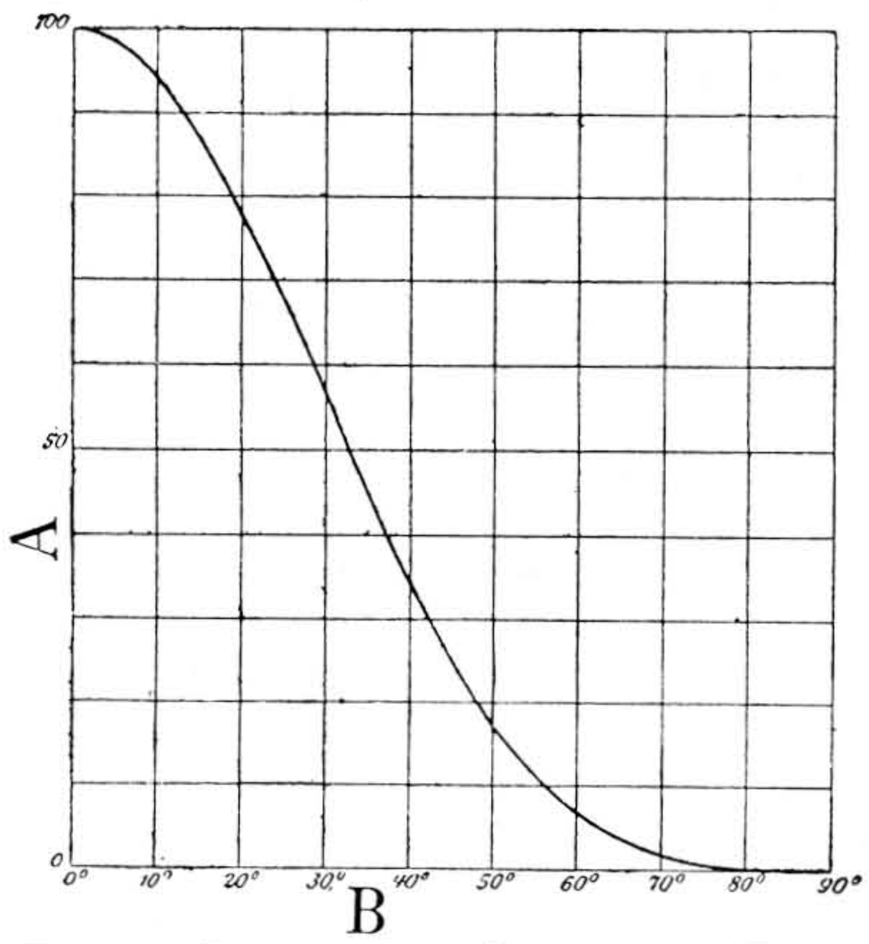

FIG. 36. INTENSITY OF IMAGE OVER FIELD OF DEFINITION

A = Illumination of image (100 at centre)
B = Angle of incidence of principal ray

given below and plotted graphically (Fig. 36) are percentages of that at the centre.[2]

Angle	.	.	0°	10°	20°	30°	40°	50°	60°	70°
Illumination	.	.	100	94·1	78·0	56·2	34·4	17·1	6·2	1·4

The latitude is fortunately so large that a variation of about 20 per cent (which allows of an angle of 18° in the extreme pencils, or a field of 36°) is negligible, and even a variation of 40 per cent (field of 56°) is not very harmful, but for wider angles the effects of this variation become excessive.[3]

The construction of the lens almost always produces a still more rapid falling-off in illumination at the edges of the field than is accounted for above, because the oblique pencils are partly intercepted by the mount. To explain this without excessive complication let us see what would happen in the case of a lens mount without glasses. For a certain aperture of the diaphragm DD (Fig. 37) all those light-beams more oblique than AA would be partially intercepted by the lens cell and the tube. If the diaphragm is replaced by a smaller one $D'D'$ the limit of obliquity for which there is no cutting off is increased, since in these circumstances the beam BB passes freely.

From this it is seen that reducing the aperture of the stop reduces the inequality in the brightness of the field, but without entirely correcting

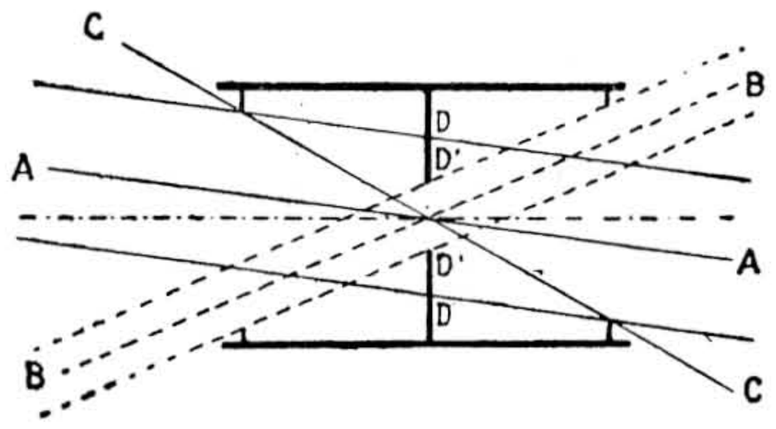

FIG. 37. CUT-OFF OF MARGINAL RAYS

it, since the causes previously mentioned still operate.

A beam of obliquity equal to CC is completely stopped, and this denotes the limit of the field illuminated by the lens. These phenomena can easily be verified by moving the eye in the plane of a sharp image formed by a lens. It is then

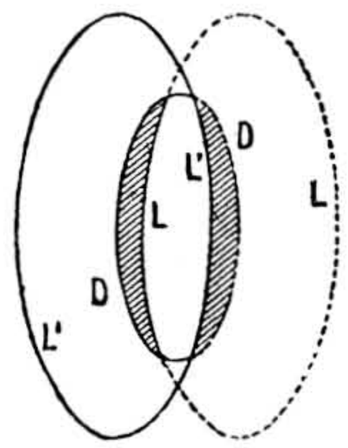

FIG. 38. LENS APERTURE FOR OBLIQUE PENCILS

seen that the aperture of the stop DD is more and more covered by the lens rims LL and $L'L'$, as the eye moves away from the optical axis (Fig. 38).

[1] If we suppose that the law of inverse squares applies to this case, the illumination would be proportional to $\cos^4\omega$, where ω is the angle the secondary axis makes with the optical axis. As a matter of fact the variation is not so great, but is certainly more rapid than would be expressed by $\cos^3\omega$. The numerical values given below and used for Fig. 36 are calculated for $\cos^4\omega$.

[2] It is by no means uncommon for the illumination actually *measured* to be only 70 per cent of that calculated at 20° from the axis and only 50 per cent of that at 25°, this being due to the partial stopping of the oblique rays by the lens mount.

[3] Amongst the devices used for compensating for this variation, even approximately, may be mentioned: (1) an opaque stop or a truncated cone placed at some distance in front of the lens to cut off some of the central rays; (2) a star-shaped diaphragm placed in front of the lens and rotated by blowing, during exposure; (3) a graduated neutral filter placed in front of the photographic plate: this may consist of a negative of a uniformly illuminated surface taken with the same lens, or a plano-convex lens of neutral glass cemented to a plano-concave lens of clear glass to form a plane-parallel plate.

55. Field Illuminated; Field Covered. We have just seen that the image plane receives no light at an angle greater than a certain value. Rotation of the secondary axis corresponding to this angle round the optical axis generates a cone of which the vertex angle (twice this limiting inclination to the axis) is the *angle of the field illuminated*. This cone cuts the image plane in a circle.

The image, which is sharp at the centre of the circle, becomes as a rule useless at the edge as much from want of sharpness as from insufficient illumination. If we agree to a certain tolerance in regard to definition (e.g. suppose we agree to accept for the image of a point of light a disc 1/250 in. in diameter), then at a certain aperture of the diaphragm the images of distant objects will be useful within a circle, concentric with the circle of illumination, which is the *circle of good definition* under the given conditions. The vertex angle of the cone formed by the secondary rays passing through this circle is the *angle of field covered sharply*. If the plane of the focussed image moves away from the lens (as when the object approaches it) the angle of field sharply covered remains the same, but the circle of good definition, being the intersection of the cone with a plane farther from the vertex, increases.

The employment of a small stop to improve the definition of the oblique images and to equalize the illumination over the field often has the effect of increasing the field of view as well, but this must not be taken as a general rule. Lens catalogues indicate (or should) the *angle of field* covered sharply for each lens at different apertures, or the diameters of the circles covered, for an object at infinity. Any rectangular shape that can be inscribed in that circle will then receive a sharp image. This amounts to saying that all plate sizes of which the diagonal is less than this diameter will be sharply covered in the specified circumstances.

56. Loss of Light in Passing through a Lens. A beam of light passing through transparent matter undergoes loss, partly by absorption and partly by reflection at the entrance and emergence surfaces.

Loss by absorption within the glass of a modern lens is generally very small, often negligible, for visible rays. The mean values of transmission (not reckoning loss by reflection, to be examined later) are indicated below for different total thickness of glass, expressed in centimetres—

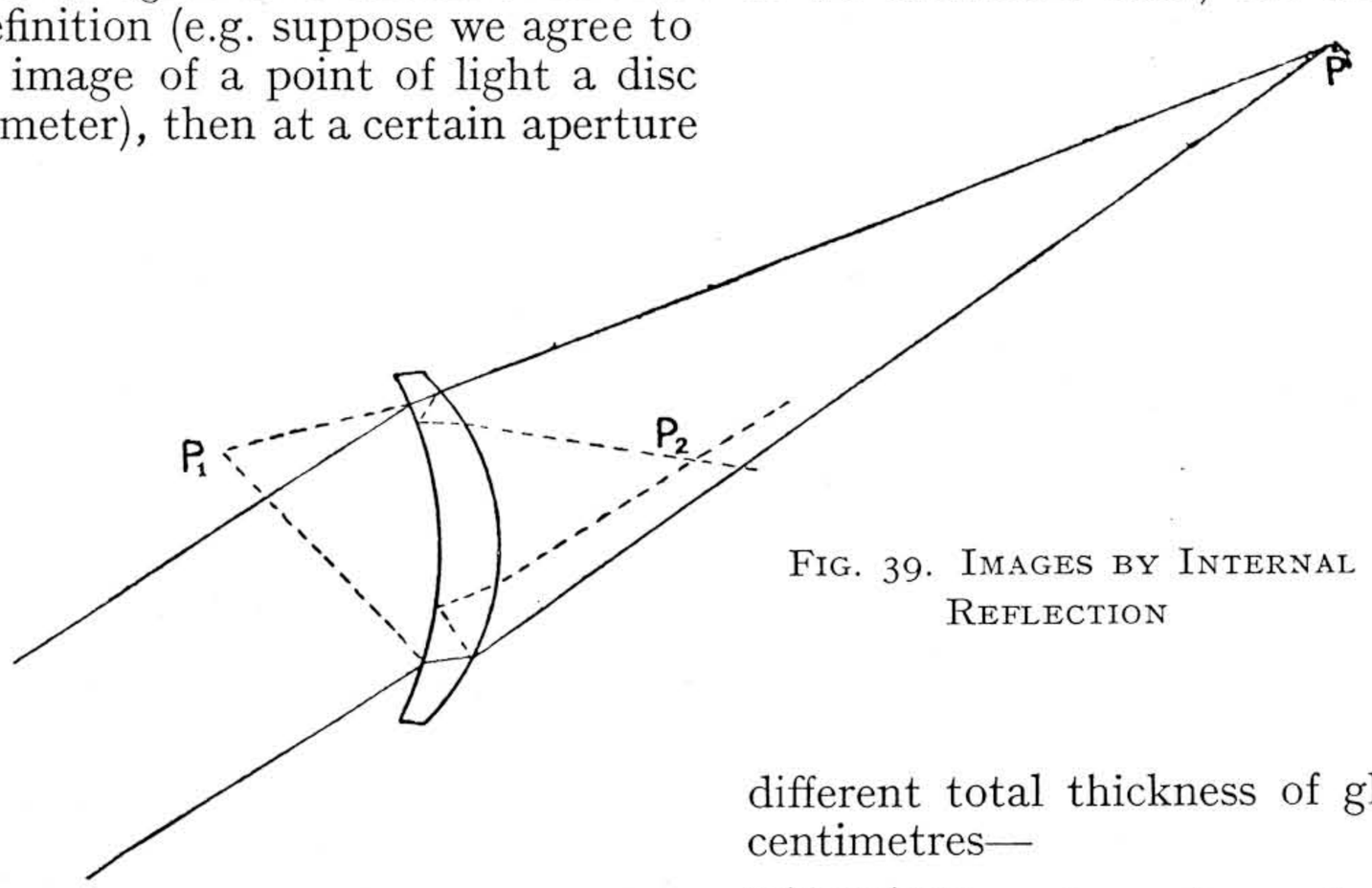

FIG. 39. IMAGES BY INTERNAL REFLECTION

Thickness in cm.	1	2	3	4	5	6
Transmission %	97·6	95·3	93	90·7	88·5	86·4

This loss is much greater for ultra-violet radiation, which is, however, useless and indeed often harmful in current photographic practice. The loss of light by absorption may be considerable in old lenses, certain glasses of which have a pronounced yellow colouration.

Loss by reflection at the surfaces of the lens is generally more considerable than loss by absorption. In objectives containing one or more cemented lenses the loss is negligible at the cemented surfaces (about 1 per cent); we need therefore to consider only losses at glass-air surfaces. The mean values of transmission (not reckoning loss by absorption, examined above) are given below for one, two, three, or four lenses in air, supposing that the polish is perfect.

Number of glass-air surfaces	2	4	6	8
Transmission %	89·7	80·4	72·1	64·6

To obtain the total transmission approximately, reckoning both causes of loss, it would be sufficient to multiply one factor by the other, e.g. a lens containing six glass-air surfaces in

which the total of the thicknesses of the components is 3 cm. transmits probably

$$72{\cdot}1 \times 0{\cdot}93 = 67 \text{ per cent.}$$

57. Effect of Internal Reflection. The light reflected at each free surface is, unfortunately, not lost; a part of the beam which has suffered several internal reflections is sent back to the object, but another part passes on to the plate. In Fig. 39 it is seen that the beam which forms

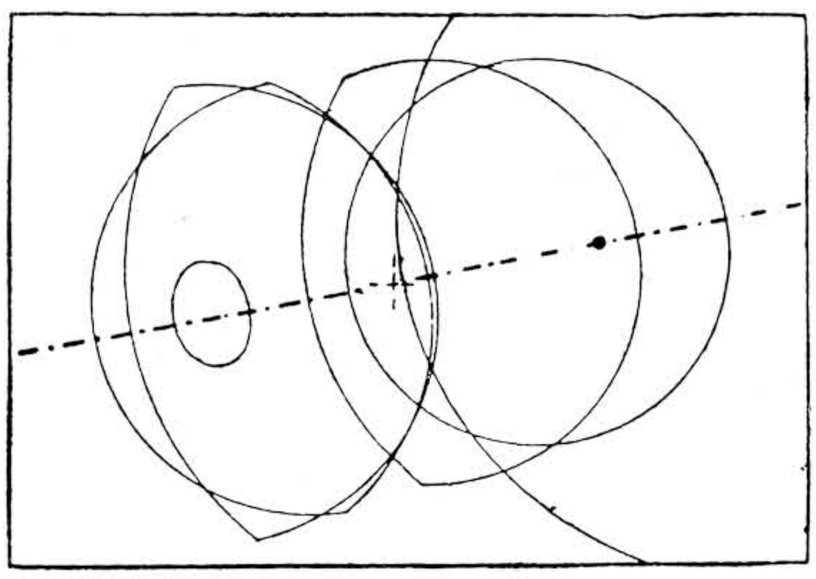

FIG. 40. FALSE IMAGES
(R. Schüttauf)

the image P also gives an image P_1 on the side of the object, after one internal reflection, and an image P_2 on the side of the image P after two internal reflections. If the incident beam is sufficiently intense, and if the exposure is sufficiently long, these images will be registered on the photographic plate as circular or elliptical areas of relatively large dimensions. The number of parasite (ghost) images reflected to the plate will be greater the greater the number of glass-air surfaces. The intensity of the images diminishes according as the number of reflections the beam has undergone is greater.

Number of glass-air surfaces . .	2	4	6	8
Number of ghost images . . .	1	6	15	28

These ghost images appear frequently in photographs taken at night which have had a long exposure and where the view contains light-sources of great intensity towards the edge of the field. Owing to the symmetry of the lens round its axis, the secondary axis of the different beams arising from the same original beam are contained in a meridian plane. The centres of the areas corresponding with a single point source are thus all situated on the straight line which joins the image of the point and the point where the optical axis cuts the sensitive surface. Fig. 40 (from R. Schüttauf) shows the limits of the six ghost images given by a rectilinear lens (symmetrical lens of two groups each consisting of two cemented lenses, so that there are in all four glass-air surfaces) where the object is a bright point on a black background.[1]

In some of the old lenses one of the internally reflected beams gave almost a sharp image of the stop in the image plane, somewhat enlarged, centred on the optical axis, and superposing a bright patch (called the *central flare spot*) on the image.

In regular photographic work these ghost images are not seen individually, but the light directed towards the plate after internal reflection forms a slight fog over the whole image, reducing contrast. Fig. 41 (from measurements made by E. Goldberg) shows the effect of these internal reflections for an objective containing four independent lenses (eight glass-air surfaces) photographing a landscape of which *HH* is the horizon. Successive reflections of the light from the sky produce on that part of the plate on which the landscape is recorded an amount of light which decreases as the distance from the horizon line becomes greater. The circles in dotted lines correspond with different obliquities of the beam; the curves in full line join points of the image in which the parasite light has an intensity equal to 6 per cent, 5 per cent, . . . 2 per cent of that in the image of the sky. The

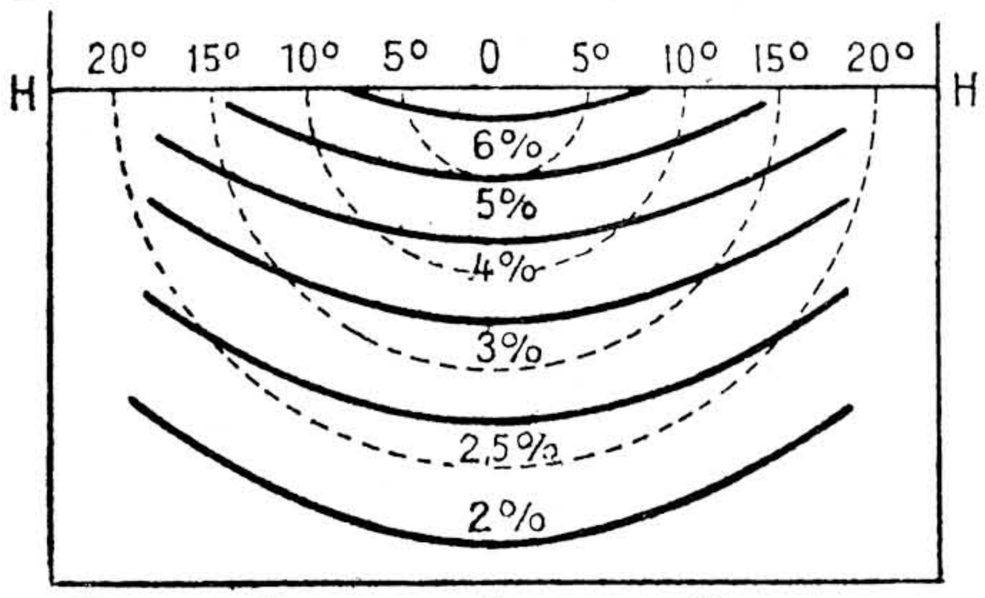

FIG. 41. VEIL FROM INTERNAL REFLECTION
(E. Goldberg)

intensity of this parasitical light is reduced appreciably when the lens is stopped down.[2]

[1] To observe this phenomenon easily, stick a small piece of opaque card on the back surface of the focussing screen midway between the centre and a corner, and direct the camera towards the sun, so that the direct image of the sun is masked by the card. On the focussing screen a number of bright circles will be seen, which would not have been the case if the image of the sun, incomparably brighter, had remained visible in the field.

[2] The curves in Fig. 41 give results obtained with a lens at $F/6{\cdot}8$ (§ 71).

The same author has been able to establish the fact that from these reflections and from the diffusion that is unavoidable at surfaces, even if perfectly polished and kept perfectly clean, the extreme contrast in the image yielded by a lens is always less than in the subject itself examined from the same viewpoint. A subject having a range of contrasts infinitely great is reduced to a contrast about 200 : 1 with a single lens and to about 60 : 1 with an anastigmat giving a sharp image over a relatively large field.

These measurements confirm the experience of the old photographers, who used for landscape work a single objective consisting of a number of

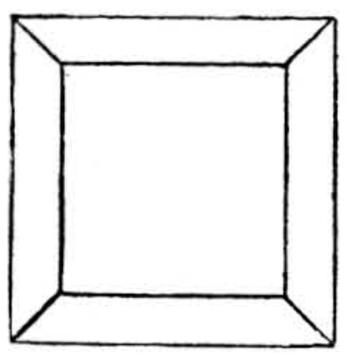

FIG. 42. SMALL CUBE AS SEEN BY A LARGE LENS

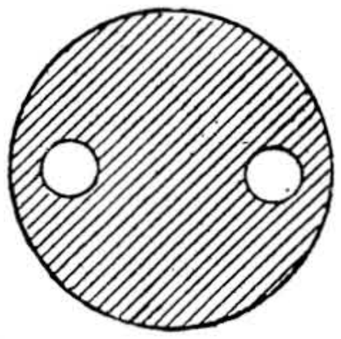

FIG. 43. DUPLEX DIAPHRAGM

lenses cemented together, considering that this type gave more *brilliant* images.[1]

58. Stereoscopic Effects. A lens of very large diameter, such as some at one time used as portrait lenses, gives an image of a near object in which appear certain parts of the subject which an eye (placed as close as possible to the lens) would see only if moved from right to left (Brewster, 1860) and up and down. The image of a small cube isolated in space, e.g. a die suspended by a thread in the optical axis of such a lens, would show five faces (Fig. 42), presenting thus the appearance of a truncated pyramid seen from the direction of the small end.

It has long been recognized that it is possible to obtain with such a lens, fixed with respect to the object photographed, two stereoscopic images by using an eccentric stop, rotated through 180° between the exposures, the aperture being $1\frac{1}{4}$ in. in a horizontal direction from the centre, so that two successive positions of the aperture are at a distance apart equal to the mean separation of the eyes. The diaphragm merely extracts from the complete image certain details by isolating certain light-rays.

It has also been proposed (Lehmann, 1878; Boissonas, 1900, etc.) to use with large lenses a diaphragm with two apertures (Fig. 43) to obtain a single image in which the doubling of certain outlines would suggest some idea of relief.

The painter or draughtsman, observing his model with two eyes, synthesizes the two views. It thus seems logical for the portrait photographer to use a lens of which the useful diameter is at least equal to, preferably greater than, the mean separation of the eyes (G. Cromer, 1921), without, however, falling into an exaggeration which, viewed at a short distance, would spoil the image. A lens of small diameter gives a view as seen by a one-eyed person.

In scientific photography, in which a mathematically correct perspective is required, the use of lenses of large diameter should, on the contrary, be avoided.

59. Defects of Workmanship and of Material. Photographic lenses made by opticians of repute are always carefully examined before leaving the workshops, and run hardly any risk of showing any faulty material or bad workmanship, but these faults are sometimes met with in lenses which carry no maker's name or bear a more or less fancy name.

Defects of material comprise non-homogeneity of the glass and imperfect annealing.

Want of homogeneity is not usually evident except in lenses of large diameter; it can be recognized by forming on a ground glass screen the image of a point source of light (e.g. the image of the sun in a well-polished metal ball or small silvered bulb) close to the axis of the lens. If now the screen is moved out of focus until a circle of light of about $\frac{1}{2}$ in. diameter is obtained, any defect will be visible as striæ or dark zones.

Bad annealing, which gives rise to *double refraction* of the rays of light (leading to a doubling of the image) can only be seen by examination in polarized light in an optical laboratory provided with the proper equipment.

Excessive pressure on the glass in its mount may also lead to double refraction.[1]

Beginners have a tendency to consider the *bubbles* seen in *every* anastigmat as a defect.

[1] E. Goldberg defines *brilliance of an objective* by the logarithm of the ratio I_0/I_R where I_0 = the illumination of the image of a uniformly illuminated hemisphere centred at the optical centre of the lens, and I_R = the illumination of a point of the image of an absolutely black object (§15) placed at the intersection of the hemisphere and the optical axis.

[1] It would be very desirable if the precaution, taken by some opticians, of engraving on the lens mount marks to indicate when the different parts are correctly screwed together, were more general.

These bubbles, enclosed in the glass in the course of the second melting (after the first melting has been broken up and faulty pieces rejected) cannot be removed except by completely liquefying the glass, which would have the effect of separating the constituents in the order of their density and thus cause a defect much more serious than the bubbles, of which the sole effect is to diffuse about one-thousandth part of the light—an absolutely negligible amount.

The form of faulty workmanship most frequently met with in lenses of poor quality is bad centring (§ 40). This can easily be tested by looking at the images of a point or small source of light reflected at the various air-glass surfaces. These ought to lie exactly on a straight line.

Another defect which is likely to arise when the lens has been remounted in a different mount from that supplied by the maker is incorrect separation of the different components, or incorrect placing of the diaphragm, an error of less than 0·004 in. having a fatal effect on the sharpness of the image, especially in lenses of short focal length. As a general rule, any modification of the mount (particularly those with a between-lens shutter) should be made, wherever possible, by the lens maker, who, more than anyone, is interested for the sake of the reputation of his name or trade-mark in preserving the original perfection of the instrument. If it is impossible to do this, it would be as well to make a thorough test of the lens before and after any modification (§ 116).

CHAPTER VIII

FOCAL LENGTH OF LENSES; SCALE OF IMAGE; CONJUGATE POINTS

60. Conjugate Points. When a point R' is the image of a point R (Fig. 44) formed by an optical system, the point R is also the image of R' (principle of *reversibility* of light rays[1]); the points of such a pair are two *conjugate points* of the optical system considered. Various formulae and simple graphical constructions enable us, when the focal length of a lens and the positions of the nodal points or foci (§§ 44 and 45) are known, to determine the position of the image of a point the position of which is known.

In order to avoid the complication of curvature of the field, we shall consider, in what follows, only points on the optical axis, the images of which are therefore also on the optical axis.

The *power* of a lens (*convergent power* or *convergence*) is the reciprocal $1/F$ of the focal length; when the focal length is measured in metres the power of the system is expressed in *diopters*. Thus, for example, a lens of 0·20 m. (8 in.) focal length has a power of 1/0·20, or 5 diopters.[2]

The effect of an optical system is to add its convergence (or subtract, in the case of a divergent system, i.e. of negative *vergence*) to that of the light beams passing through it. Now a point at a distance p from the nodal point of incidence sends to the system a divergent beam of which the negative vergence is $1/p$ (this is also sometimes known as the *proximity*, (*optical*) of the point considered), which can also be expressed in diopters. If the convergence (positive vergence) $1/F$ of the system is greater than the negative vergence of the beam $1/p$, the emergent beam will have a convergence $(1/F - 1/p)$ diopters. The proximity $1/p'$ of the image (p' being measured from the nodal point of emergence) is then given by

$$1/p' = 1/F - 1/p \quad \text{or} \quad 1/p + 1/p' = 1/F$$

which translates literally the mechanism of the alteration of the waves of light made by the optical system in question

If, instead of considering, as above, the *ultra-nodal distances* (reckoned from the nodal points), we consider the *ultra-focal distances* d and d' (reckoned from the foci), we shall obtain the law of conjugate points in the form given by Newton, which is often very advantageous,

$$d \times d' = F^2$$

or, in ordinary language, the product of the ultra-focal distances of a point and of its image is equal to the product of the focal length by itself.[1]

61. Among the different methods of graphically representing the law of conjugate points, the following (Lissajous, 1870) enables us to account for all the practical consequences of this relationship at first sight. Construct a square (Fig. 45) $NFMF'$, of which the sides are equal to the focal length of the lens considered, and produce the sides NF and NF' to X and Y respectively. From the origin N mark off NR on NX equal to the ultra-nodal distance (p) of the point object (FR is thus the extra focal distance d), join RM and produce it to meet NY in R'. The length NR' is equal to the ultra-nodal distance p' of the point-image and $F'R'$ is the ultra-focal distance d'. If now RR' is rotated about M, its intersections (produced if necessary) with NX, NY correspond to two

[1] The principle of reversibility is frequently misinterpreted. For instance, if a number of points at different distances from the lens have been photographed on a flat plate it cannot be expected that by a reversal process the images of the photographed points will coincide with the system of points photographed. Again, an image defaced by aberrations (distortion excepted) will not, by a system of reversal, form a sharp image. Even a sharp photograph cannot, by reversal, yield an image as sharp as the original, since the aberrations in each process add up.

[2] The following table gives the focal lengths of lenses of various powers as expressed in diopters—

Focal Power Diopters	Focal Length		Focal Power Diopters	Focal Length	
	In.	Cms.		In.	Cms.
·25	157·48	400	4·5	8·74	22·2
·5	78·74	200	5	7·87	20
·75	52·49	133·3	5·5	7·15	18·18
1	39·37	100	6	6·56	16·6
1·25	31·49	80	7	5·62	14·28
1·5	26·24	66·6	8	4·92	12·5
1·75	22·49	57·14	9	4·37	11·1
2	19·68	50	10	3·93	10
2·25	17·49	44·4	11	3·57	9·09
2·5	15·74	40	12	3·28	8·3
2·75	14·31	36·36	13	3·02	7·69
3	13·12	33·3	14	2·81	7·14
3·5	11·24	28·57	15	2·62	6·6
4	9·84	25	20	1·96	5

[1] To obtain the second of these expressions from the first it is only necessary to replace p and p' by $(d + F)$ and $(d' + F)$ respectively, get rid of the denominators in the fractions, and eliminate identical terms appearing on both sides of the equation.

conjugate points.[1] It is seen that as R moves away from the lens, R' moves nearer to it, and vice versa. When R moves to infinity, the straight line MR becomes parallel to NX, and R' coincides with F'. Inversely, if R approaches F, the straight line RM becomes parallel to NY and consequently R' recedes to infinity.

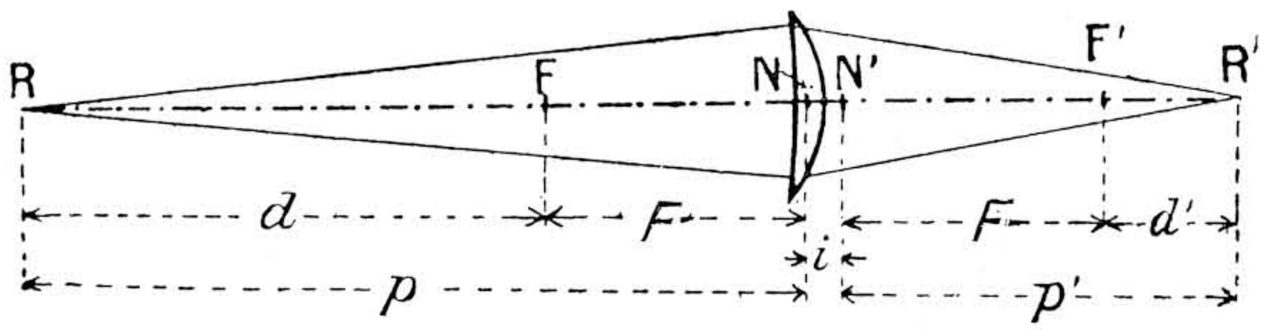

FIG. 44. IMAGE FORMATION

If the point R approaches closer to the lens than the focal length, e.g. to the position marked T, the straight line MT no longer meets NY, but its prolongation NY', in T', corresponding to a virtual image (§ 43).

A particularly interesting case is that in which the object S has an ultra-nodal distance twice the focal length. In this case $FS = MF$, and the straight line MS is inclined at 45°, and S' is such that $NS' = NS$. The two points S and S' at equal distances from their respective nodal points are called the *symmetrical points* of the lens; their separation is the shortest distance that can exist between a point object and its real image. Another particular case, but of no practical interest, is that where the points R and R' coincide with N; this leads to the fact already mentioned (§ 44) that the nodal points are conjugate.

62. Relations between the Size of Object and Image. If we consider a lens without appreciable distortion or curvature of the field (which would obviously not be the case with the meniscus represented in Fig. 46), we know that the images of all points on a plane perpendicular to the optical axis lie on another plane also perpendicular to the optical axis. Knowing also that the exterior parts of a secondary axis are parallel straight lines (lines joining object and image points to the corresponding nodal points), we can determine the *scale of the image* (relation between corresponding dimensions of object and image) of an object of which the position is known relatively to a lens of known focal length.

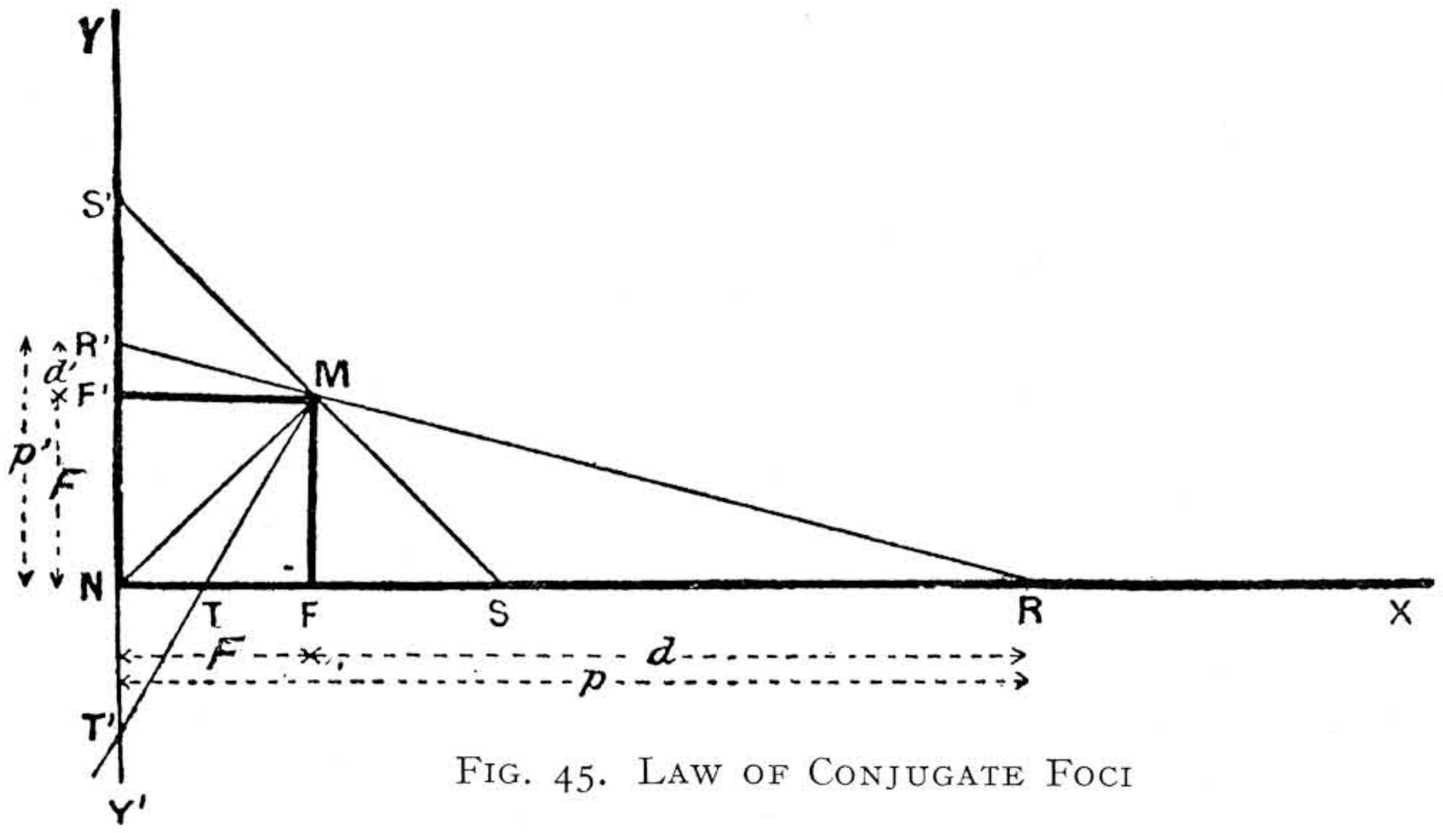

FIG. 45. LAW OF CONJUGATE FOCI

Let us suppose that the length of the image of an arrow RQ (Fig. 46) of length l perpendicular to the axis, at an ultra-nodal distance p, is to be determined. Join by a straight line the point Q to the nodal point of incidence N, and draw through the nodal point of emergence N' a line parallel to QN to meet in Q' the straight line $R'Q'$ through R' (the image of R), parallel to RQ. The point Q' is the image of Q, and the element of line $R'Q'$ is the image of RQ. The length l' of this image can be ascertained from l, since the triangles RQN and $R'Q'N'$ are similar.

[1] This property can be verified by consideration of the similarity of the triangles MFR, $R'F'M$ or by equating the area of the triangle RNR' to the sum of the areas of the square and the two triangles MFR and $R'F'M$.

The ratio of similitude or scale ($n = 1/N$) of reproduction[1] is then equal to the ratio of the ultra-nodal distances of image and object

$$n = 1/N = l'/l = p'/p$$

From this relation can be deduced simply[2]

$$p = (1 + N)F = (1 + 1/n)F$$
$$p' = (1 + n)F = (1 + 1/N)F$$

If we replace the ultra-nodal distances by the ultra-focal distances, we obtain the simpler and more easily expressed relations

$$d = NF = F/n \qquad d' = F/N = nF$$

To obtain an image of a plane object placed perpendicular to the axis at a reduction of $1/N$, it should be placed at an ultra-focal distance equal to N times the focal length; the focussed image is formed at an ultra-focal distance $1/N$th the focal length.

For enlargement n times, the object should be placed at an ultra-focal distance equal to $1/n$th the focal length, and the image will be at an ultra-focal distance equal to n times the focal length.

For example, if it is desired to reduce a square of 12 in. sides to an image of 4 in. sides, with a lens of 8 in. focal length, $N = 3$. The original must be placed at $3 \times 8 = 24$ in. from the anterior focus, and the image will be formed on a plane at $8/3 = 2\frac{2}{3}$ in. from the posterior focus. Reversing the two positions, the image would be enlarged three times ($n = 3$).

For a reproduction same size ($N = n = 1$) the planes of copy and image cut the axis at the symmetrical points[3] S and S'.

There is reduction whenever the object is farther from the lens than its image,[1] and magnification whenever the object is closer to the lens than to its image.

When the object photographed has a certain depth, it is no longer possible to speak of the scale of the image, since this will vary from point to point. It should be mentioned here that in the most general case, where such an image is photographed on a plane perpendicular to the axis, the relative dimensions of the different parts of the image are inversely proportional to the ultra-nodal distances of the corresponding point objects, and not to their ultra-focal distances, the point images being all on the same plane and no longer the *conjugates* of the point objects.

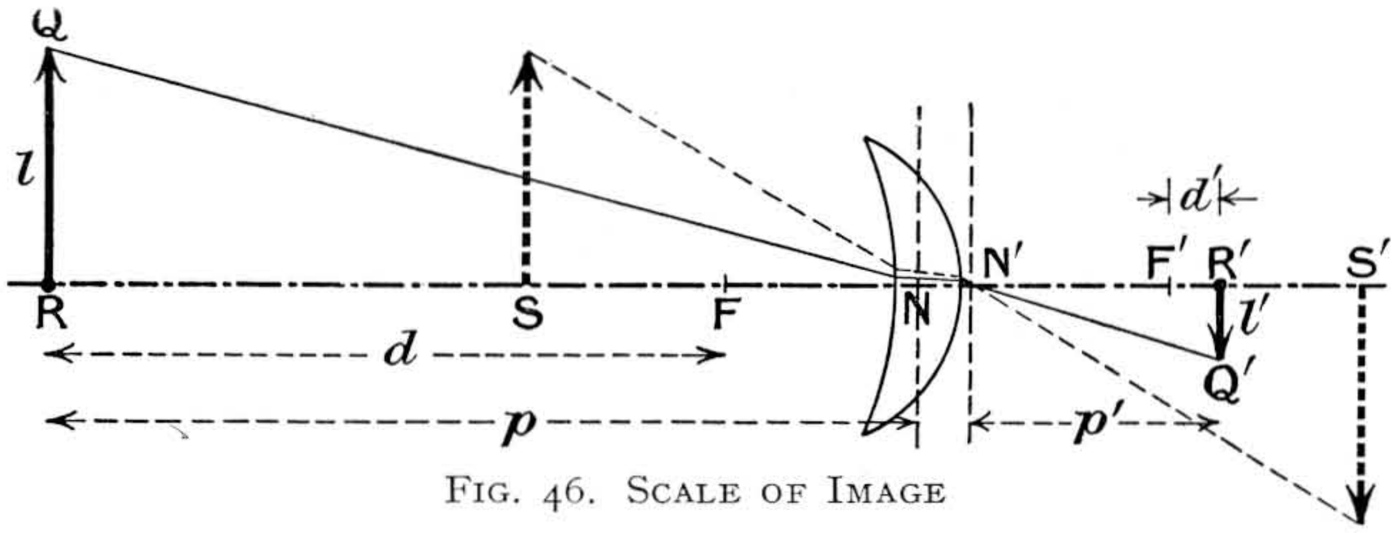

FIG. 46. SCALE OF IMAGE

63. Graphical Construction of the Image Formed by an Optical System. Knowing the position of a point object Q relatively to the foci F and F', and the nodal points N and N' of an optical system, the position of the image Q' can be determined as follows: Draw the optical axis FF' (Fig. 47), and at N and N' draw perpendiculars to it to indicate the nodal planes. From Q draw a straight line parallel to the axis, meeting the nodal plane of emergence in the point a'; a' is the image of a, the intersection of the ray with the nodal plane of incidence. The emergent ray will then pass through the focus F', since all incident rays parallel to the axis, after refraction, meet the optical axis at the posterior focus. Draw another line QF and produce it to meet the nodal plane of incidence in b; the image of b is b' on a line through b parallel to the axis, which is also the emergent

[1] When the *scale* of reproduction is less than unity, i.e. in the case of *reduction*, it is often expressed as a fraction $1/N$, N being the reciprocal of n.

[2] By simply replacing p by its value Np' in the expression $1/p + 1/p' = 1/F$, reducing the three fractions to a common denominator and simplifying the result.

[3] The *nodal planes*, planes through the nodal points perpendicular to the axis, are also object and image of the same size but without reversal of the image; this property is without practical application.

[1] The scale is zero when the object is at an infinitely great distance (e.g. the stars). The distance between the images of two distant objects cannot be determined from considerations of scale. It is determined from the angle seen to subtend the two point objects, e.g. the solar disc is viewed from the earth under an angle of 32 minutes of arc (*apparent diameter*) i.e. about 1/100th of his distance. The image of the sun will thus be equal to 1/100th of the focal length of the lens used. The mean diameter of the lunar image is about the same size as that of the sun.

ray. Q', the intersection of $a'F'$ and bb', is the image required. The accuracy of the construction can be tested by seeing whether QN, $Q'N'$ of the secondary axis are parallel to one another.

64. Image of a Plane Inclined to the Axis. Consider a lens of which the foci and nodal points are FF' and NN' respectively (Fig. 48), and let R and R' be two conjugate points. If a plane perpendicular to the plane of the paper meets the optical axis obliquely at R, all the points in this plane (at least all those not far from the axis) form their images on another

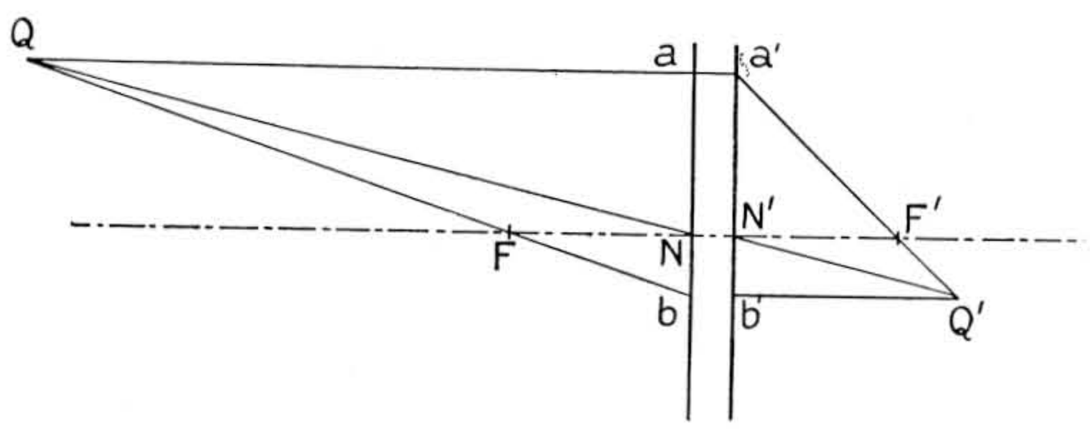

FIG. 47. GEOMETRY OF IMAGE FORMATION

plane, also meeting the optical axis obliquely at R' and perpendicular to the plane of the paper. This image plane is defined by the condition that its intersection M' with the nodal plane of emergence should be contained in the plane MM' parallel to the axis through M, the intersection of the object plane with the nodal plane of emergence.

It is easily seen that the image is deformed relatively to the object. In particular the points on the line X, the intersection of the object plane with the anterior focal plane, will be imaged at infinity, the secondary axes NX, $N'X'$ being parallel. In the same way infinitely distant points of the object plane in the direction NY will be imaged on the straight line Y', the intersection of the image plane with the posterior focal plane. On this straight line all the vanishing points of parallel straight lines in the object plane will be imaged, while all lines meeting in X will be parallels in the image plane.

This manner of distorting is made use of for correcting the perspective of photographs accidentally taken on an inclined plane (by making all the vanishing points of vertical lines in such a perspective meet in X, they will be *corrected* in the image), or for making lantern slides which are to be projected obliquely. We shall return to this subject in more detail in Chapter XLV.

65. Experimental Determination of the Focal Length of a Lens. The method of measuring the focal length[1] usually described consists in focussing a distant object (distant at least 1,000 times the focal length to be measured) in the camera, then focussing an equal size image of an easily measurable geometrical figure (e.g. a circle or equilateral triangle). The amount the camera has to be extended between the two positions is exactly the focal length.[2] Unfortunately, it is not always possible to have a distant view at hand, and, on the other hand, to get an image exactly full size often requires a large number of trials when the use of a special camera such as a process camera is not available.[3]

Instead of measuring the focal length directly, as above (distance of a focus from the corresponding symmetrical point), it is easy to calculate it by focussing a test object on two different known scales, and measuring the displacement of the focussing screen between the two positions.

As far as possible, the precautions recommended in process work (Chapter XLV) should be taken to ensure parallelism between the object plane and the focussing screen (this being supposed perpendicular to the axis), and accurate focussing should be done in the manner

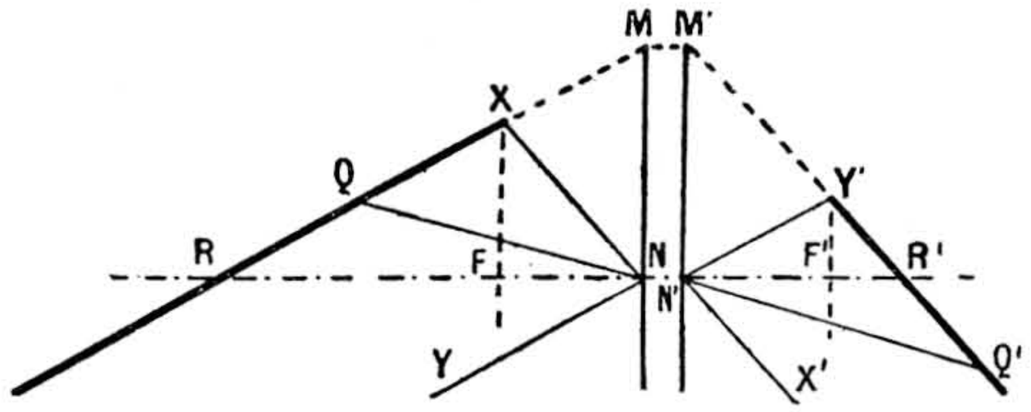

FIG. 48. IMAGE FORMATION ON INCLINED SURFACE

suggested in § 308. Let n and n' be the two scales, which may be chosen arbitrarily but very

[1] The focal length indicated in catalogues, or engraved on the mount of a lens, is the mean of the probable focal lengths of a number of specimens, and this may differ by 2 per cent to 5 per cent from the true value.

[2] For these operations it is advantageous to reverse the focussing screen, as it is easier to measure, with the accuracy that i desirable, the image directly on the ground glass side.

[3] If a distant object is available for focussing on, it would be sufficient to obtain the second position at a scale of reduction n. It is known that, in these conditions, the ultra-focal distance of the image is nF, equal to the change in camera extension measured (e). The focal length is then $F = e/n$. It would be necessary to avoid using a small value of n, for then e would be small, and owing to probable errors in the measurement of e and n, the value of F obtained would be inaccurate.

accurately measured, and e the change in camera extension between the two positions.

We know that the extra-focal distances at scales n and n' are Fn, Fn' respectively; their difference is the length e, which is known. Thus,

$$e = (n - n')F, \text{ whence } F = \frac{e}{n - n'}$$

In other words, the focal length is the difference in extension measured, divided by the difference between the two scales of reproduction.[1] To get sufficient precision, the two scales chosen should be as widely different as possible.

If, for example, the test object is an equilateral triangle[2] of which the sides are 4·8 in. long, reduced in the two positions to 3·6 and 1·6 in. (scales of reduction 0·75 and 0·33 respectively) and that the increase in camera extension is 2·8 in., the focal length will be given by

$$2{\cdot}8/0{\cdot}42 = 6{\cdot}67 \text{ in.}$$

The position of the posterior focus could be easily found by measuring the ultra-focal distance nF from one of the positions of the image towards the lens. The position of the nodal point of emergence would be given by measuring a further distance F towards the lens.

66. Where the only camera available is capable of only a small range of focus (which is the case of a large number of hand cameras) the above method is not possible, and the following method can be used (Debenham, 1879). Having focussed the image of a geometrical figure and determined the scale n, the total distance l between object and image is measured. This distance is the sum of the two ultra-nodal distances p and p' increased or diminished by the nodal interval i (separation of the nodal points) according as the nodal points are in the normal position or crossed (the *nodal points* are said to be *crossed* when the nodal point of emergence is the nearer to the anterior focus, which is opposite to the case of the systems previously considered). Replacing p and p' by their values in terms of n and F, we obtain, after simplification[1]

$$F = \frac{l \pm i}{2 + n + 1/n}$$

If n is very small (which will always be the case in small cameras) $1/n$ will be very large, and consequently the error arising from neglecting the internodal distance will be divided by a number generally greater than 10 and will therefore nearly always be negligible, except for telephotos and single lenses of convertible sets. If, for example, a lens of 6 in. focal length has an internodal distance of 0·12 in. if the scale of reduction is 1/10, and the total separation between object and image is 71·5 in., the formula gives a focal length of 5·9 in., which is sufficient approximation for all practical purposes.

67. A variation of this method will avoid the error arising from neglecting the internodal distance, whatever its value, and at the same time determine it. Having measured the total distances l and l' for two scales n and n', the focal length F and internodal distance i are given by

$$F = \frac{l - l'}{\left(n + \frac{1}{n}\right) - \left(n' + \frac{1}{n'}\right)}$$

$$i = l - \left(2 + n + \frac{1}{n}\right)F$$

respectively.

If, for example, it has been found that

for $n = 1/5$ $\quad l = 43{\cdot}6$ in.
$n' = 1/3$ $\quad l' = 32{\cdot}4$ in.

it follows that

$$F = \frac{11{\cdot}2}{1{\cdot}866} = 6{\cdot}0 \text{ in.}$$

and
$$i = 43{\cdot}6 - 6(2 + 5 + 1/5)$$
$$= 43{\cdot}6 - 43{\cdot}2 = 0{\cdot}4 \text{ in.}$$

68. Direct Determination of the Position of the Nodal Points and the Focal Length. If the lens is rotated about an axis perpendicular to the optical axis, and containing the nodal point of emergence, the images of very distant points remain fixed during the rotation, at least if it

[1] If at the same time the displacement of the camera between the two positions had been measured (E), the following formula would also give the focal length, which would furnish a useful check—

$$F = E\,(1/n' - 1/n)$$

[2] Care should be taken to verify the equality of the sides in the image to be sure that there is no deformation of the image, and that there is a *scale* of reduction. In general these scales will be expressed by less simple numbers than those given in the example, but this will not affect the method of calculation.

[1] In fact $l = F(1 + n) + F(1 + 1/n) \pm i$
so that $F(2 + n + 1/n) = l \pm i.$

is not large and if the angle between the secondary axis to the point object and the optical axis is never very great (Moëssard, 1889).

To explain this, consider a lens (Fig. 49) which, for the sake of simplicity, we suppose to be reduced to the nodal planes N_iN_e. The image of an infinitely distant object in the direction N_iM on the axis is formed at the focus F. After rotation about an axis perpendicular to the optical axis through the nodal point of emergence N_e, the nodal point of incidence will move to N_i'. The point object being infinitely distant, the secondary axis $N_i'M'$ to this point is parallel to N_iM. By virtue of the definition of the nodal points (§ 44) the two exterior parts of the secondary axis are parallel to one another;

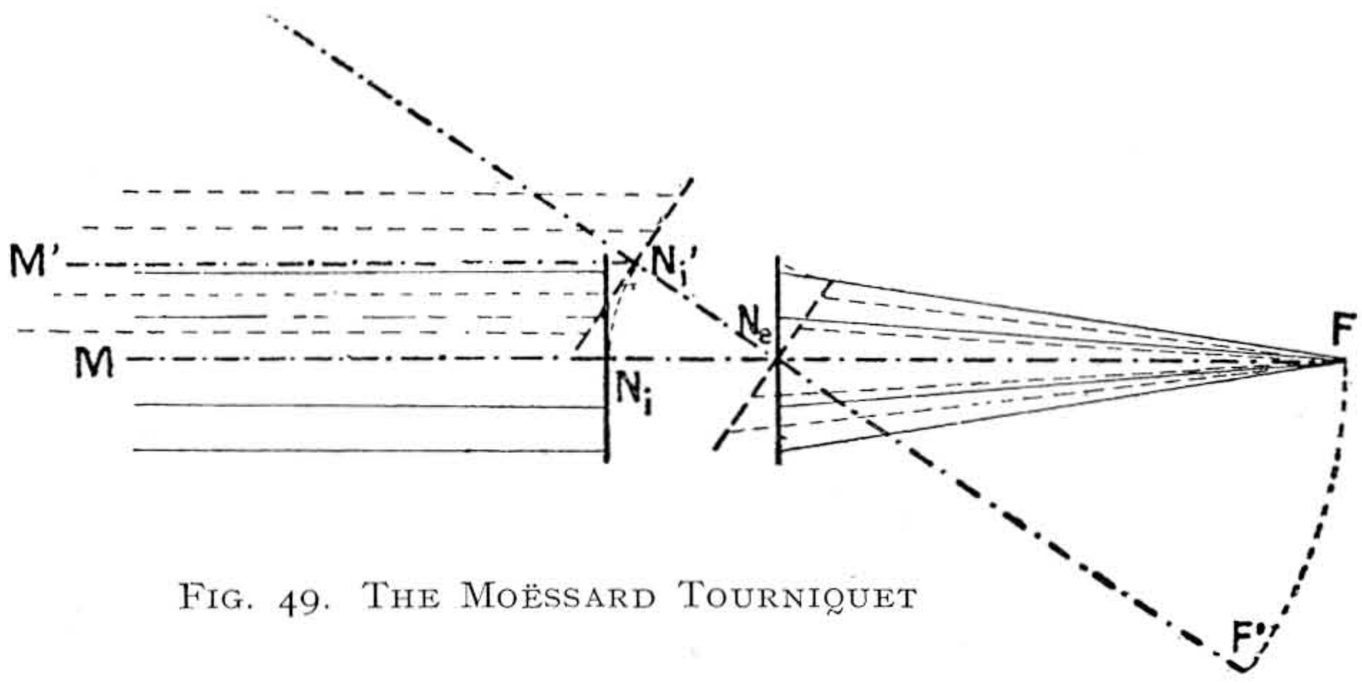

FIG. 49. THE MOËSSARD TOURNIQUET

the secondary axis thus emerges from the lens in the direction N_eF.

This property, which is made use of in the greater number of panoramic cameras, can also be utilized to determine the position of the nodal points and the focal length directly, when the nodal point of emergence is within the mount (a condition which excludes telephoto and analogous lenses). The lens being mounted so that it can be moved to and fro on a platform which can rotate about a vertical pivot, the image is formed on a fixed screen and observed while the lens is moved on the platform until a position is found such that the images of distant points remain stationary while the lens is rotated. The nodal point is then on the axis of rotation and the distance of this axis from the screen is the focal length required (Moëssard Tourniquet, 1893). Turning the lens end for end, the other nodal point can be found similarly, and a second measurement made of the focal length, which gives a useful check on the first measurement.

The displacements of the image noticed when the angle of rotation is large enable us to determine the form of the focal surface point by point, and to study the various aberrations of the image.

69. Automatic Adjustment of Object and Image. The relations between the ultra-focal distances of two conjugate points, or of planes perpendicular to the axis passing through them, can be translated geometrically so that automatic linkages between these planes can be made, so dispensing with all focussing in enlarging or reproduction. The only adjustment to be made is that for the scale of reduction, obtained by the displacement of one of the conjugate planes, the image remaining sharp throughout. Numerous solutions of this problem have been given; we shall indicate only some of them, selected from the most characteristic.

We shall suppose, in what follows, that the nodal points coincide with the optical centre. If this is not accurately true, it will be necessary to assign to one of the nodal points the position indicated by the centre, and move the conjugate point corresponding to the other nodal point in an appropriate direction by an amount equal to the nodal interval.

(1) Consider (Fig. 50) two points O and I, free to move in a slot parallel to the optical axis. At C, the intersection of the slot with the plane drawn through the optical centre at right angles to the optical axis, erect a perpendicular CD, of length equal to the focal length F. By making a bent lever pivoted at D, having slots of which the axes meet at right angles in D (J. Carpentier, 1898), rotate, it is possible to constrain two studs P and P' in the axial slot to move so that their distances d and d' from the point C will always

satisfy the relationship between the ultra-focal distances of two points, viz.[1]

$$dd' = F^2$$

It will then only be necessary to join P and P' to O and I respectively by two connecting rods, of length equal to F, to make certain that O and I are conjugate points, and consequently also the two planes perpendicular to the axis through them.

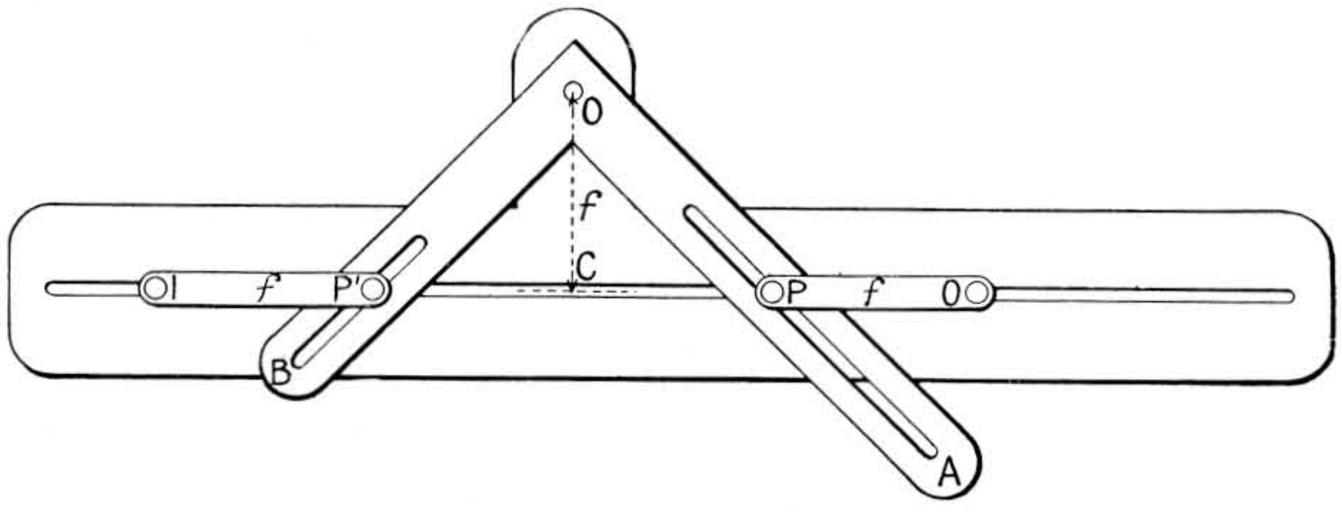

FIG. 50. SELF-FOCUSSING LINKAGE
(Carpentier)

(2) Another linkage (G. Koenigs, 1900) is formed of an articulated lozenge $P'AP''B$ (Fig. 51) and two equal rods AC, CB, pivoted at their

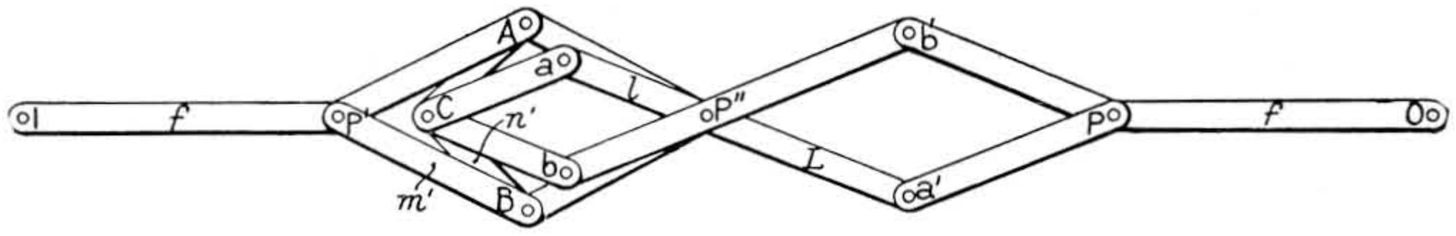

FIG. 51. SELF-FOCUSSING LINKAGE
(Koenigs)

joint. If we represent by m the common length of the four sides of the lozenge and by n that of the connecting rods, the lengths $d = CP'$ and $d' = CP''$ (which, by reason of symmetry, are obviously in a straight line) will always[2] be such that

$$dd' = m^2 - n^2$$

We then only need to give to the constant value of this product the square of the focal length in order to get the required linkage, but in these circumstances the jointed lozenge would generally be of very great dimensions; by magnifying the movements transmitted from P'' to P by means of a pantograph $CaP''a'Pb'P''bC$, the size will be considerably reduced. If the two coupled lozenges of the pantograph have sides of length l and L respectively, it will only be necessary to satisfy the relationship

$$m^2 - n^2 = F^2 \frac{l}{L + l}$$

(3) Let (Fig. 51A) the points O, I on the optical axis of the lens C be the intersections of the copyholder and plateholder. From these points draw towards the lens, distances equal to the focal length f. The points A and B thus obtained must be at distances from C such that $CA \,.\, CB = f^2$. Using AB as a diameter draw a circle with a centre M and through C draw the chord DD' perpendicular to AB. Elementary geometry teaches that $CA \,.\, CB = CD \,.\, CD'$, hence $CD = f$. The rays MA, MB, MD are evidently

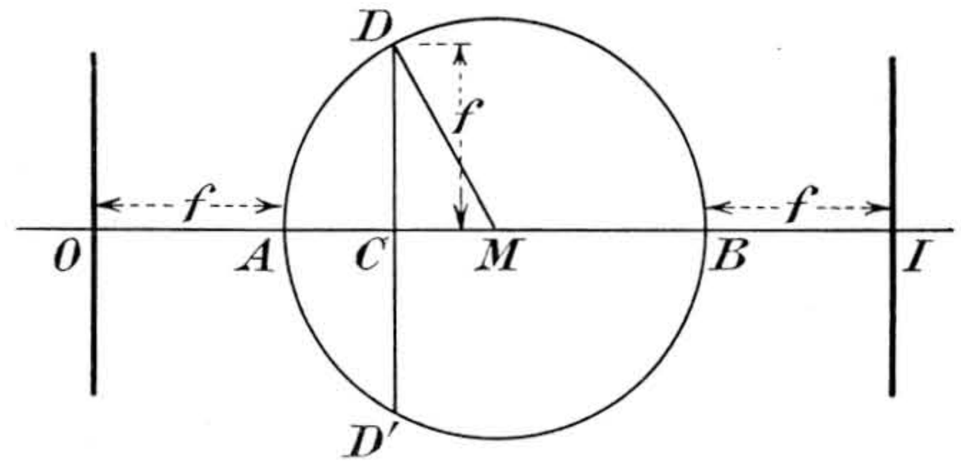

FIG. 51A. PRINCIPLE OF FOCUSSING LINKAGE.

equal and, conversely, by this last equation the respective distances of the conjugate points OC, IC can be definitely determined (P. R. Burchall, 1933). Among the methods of linking based on

[1] It is shown in the manuals of plane geometry that the product of two segments determined on the hypotenuse of a right-angle triangle by the foot of the perpendicular let fall from the apex is equal to the square of the perpendicular.

[2] A circle with A as centre and radius m will pass through the points P' and P''. Now the product of the distances of any point C from the two intersections of the circle by a chord through C, i.e. the product $CP' \times CP''$, is equal to the difference between the squares of the radius m and the distance n of the point C from the centre of the circle.

this principle may be mentioned (A. Bonnetain, 1934) a system of three racks engaging in M on one and the same toothed wheel.

(4) Finally, there are numerous arrangements based more or less directly on the hyperbolic cam[1] (G. Pizzighelli, 1889). For instance, a table T on which the optical centre C is fixed can slide on two rails RR (Fig. 52) perpendicular to the object plane P. Movement of the table T is communicated by means of racks and pinions to a table T', but in a direction at right angles. A slot in T' in the form of a rectangular hyperbola acts on a stud P' which is constrained to move in an axial slot in T. Any plane perpendicular to the optical axis and containing P' will be conjugate to P.

An obstacle to the employment of these devices in practice is the difficulty of obtaining delivery of a series of lenses of exactly equal focal length, so that it is impossible to make these apparatus in quantity. A number of linkage arrangements have been brought out in the last few years which have an adjustment for compensating for slight variations in the focal length.

70. Combination of Lenses or Optical Systems. It sometimes happens that another system, convergent or divergent, has to be added to a lens, and it is desirable to be able to determine the focal length of the combination, the optical axes of the different components being assumed to coincide (centred system).

For thin lenses in contact the law that *the power* (§ 60) *of the system is the sum of the powers of the components* may be considered exact, it being understood that negative powers (corresponding with divergent lenses) are to be subtracted.

Calling f and f' the focal lengths of the components and F that of the resultant system, then

$$1/F = 1/f + 1/f'$$

In general, however, this rule is not applicable, and account must be taken of the *spacing of the combination*, i.e. the separation between the nodal point of emergence of the first system and the nodal point of incidence of the second.[2]

[1] The relation $dd' = F^2$ is the equation of a rectangular hyperbola with the asymptotes as axes. The vertex is at a distance F from the two asymptotes.

[2] The *optical interval* is also sometimes used; this is the separation between the posterior focus of the first system and the anterior focus of the second. The optical interval δ is connected with the separation e by the equation

$$\delta = e - (f - f')$$

Using this relationship, the resultant focal length is

$$F = ff'/\delta$$

It may be added that the resulting system is *afocal* (i.e. the focal length is infinite) if the optical interval is zero (normal adjustment of astronomical telescopes).

Referring the reader to a treatise on optics for the proof, we shall limit ourselves to formulating the rule. Calling e the separation as defined above, the resultant focal length is given by

$$1/F = 1/f + 1/f' - e/ff'$$

The resultant focus is at a distance D from the posterior focus of the second system, equal to

$$D = \frac{f'^2}{e - (f - f')}$$

These rudiments will have an application to the case of lenses in which focussing is effected by varying the separation of their components (§ 108), sets of lenses (§ 112), supplementary lenses (convergent or divergent[1]) and telephoto lenses (§ 109).

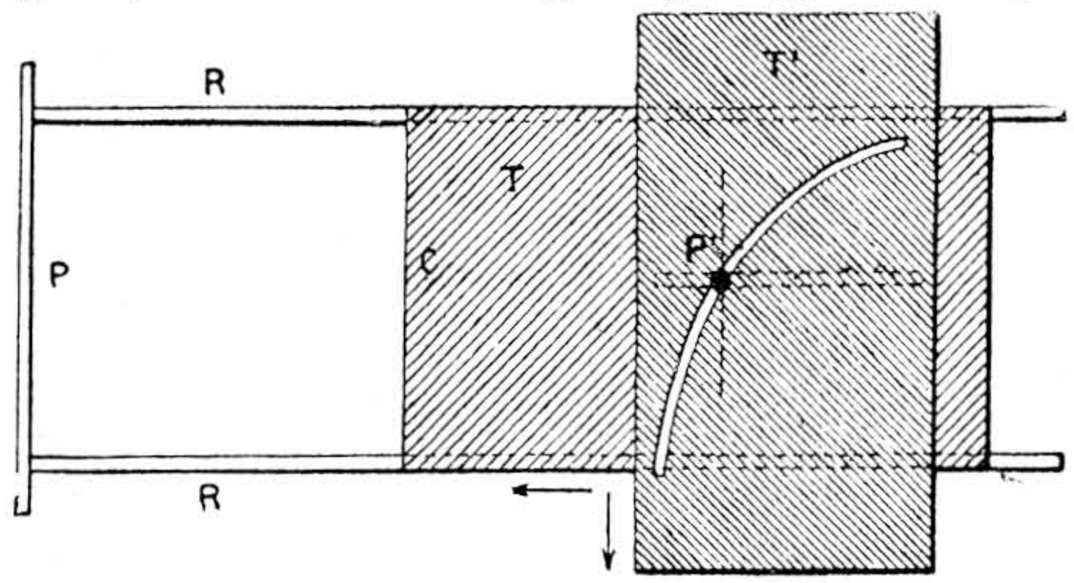

FIG. 52. CAM SELF-FOCUSSING
(Pizzighelli)

[1] To determine the focal length of a divergent lens the procedure is the same as for a convergent lens but a *virtual object* must be used, which can be the image of an object formed by a convergent system of relatively great focal length, the divergent lens being placed between the convergent system and the real image.

For an approximate value of the focal length, the lens may be directed towards the sun, and the distance from the lens to a screen measured when the diameter of the circle of light on it is double that of a circular aperture placed against the lens; or a thin divergent lens may be neutralized by placing it in contact with a thin convergent lens of the same focal length (the method used by oculists).

CHAPTER IX

DIAPHRAGMS AND RELATIVE APERTURE: EFFECT ON PERSPECTIVE AND INTENSITY

71. Relative Aperture of a Diaphragm. The diameter of the beam of rays incident parallel to the axis which, after refraction through the lens components in front of the diaphragm, completely fills the latter is called the *effective diameter* of the diaphragm. Thus, D, D' and D'' (Fig. 53), although of different diameters, all have the same effective diameter d.

If, without altering the position of the stop, the real diameter is altered, its effective aperture varies proportionally. The constant ratio between the effective and the real aperture is

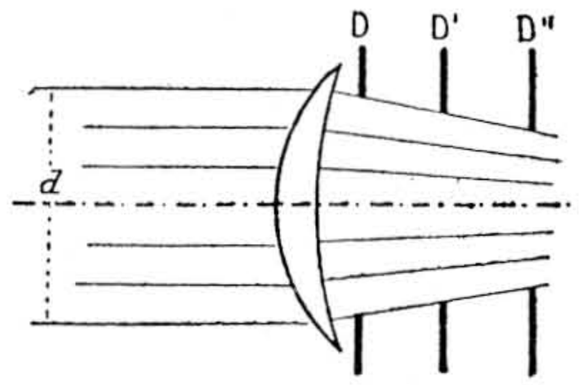

FIG. 53. EFFECTIVE APERTURE

sometimes called the *coefficient of the effective aperture*, and is equal to 1 only if the beam of light reaches the stop before meeting the lens (the case with single lenses). In the general case, in which the stop has in front of it one or more lenses forming a convergent system, the coefficient is greater than 1. As the value depends on the construction of a given lens, obviously no rule can be given, but it may be stated that with symmetrical anastigmats it generally lies between 1·1 and 1·15, whilst with anastigmats consisting of three separated lenses it often amounts to 1·3.

If the diameter of the effective aperture is $1/n$th the focal length F, the aperture is said to be F/n, which is also called the *relative aperture* of the diaphragm considered. If, for example, the real diameter is 0·8 in. and the effective aperture is 0·92 in. of a lens of 4·6 in. focal length, the relative aperture is $F/5$.

The relative aperture of the largest stop a lens can use is called the *maximum relative aperture*, or, more simply, the maximum aperture of the lens. We shall see later (§ 90) that the maximum relative aperture of a lens is the principal factor governing its speed.[1]

[1] Most very large aperture lenses have the advertised relative aperture only for the bundle of rays parallel to the optical axis (§ 54).

72. Different Types of Diaphragms. In order to be able to get all possible apertures with a lens, modern objectives are usually fitted with an *iris diaphragm* (Fig. 54) having an aperture which can be varied by means of a rotating ring or external lever on the mount.[1] The thin blades of the iris are of ordinary steel or ebonite. Though ebonite has the advantage of not rusting like steel, in damp climates, care must be taken not to subject it to great heat. Hence an ebonite iris should not be used in the enlarging or projecting lantern using a condenser, or there will be danger of the blades melting or burning.

With lenses of which the component glasses are too closely spaced to accommodate an iris, a *rotating diaphragm* is employed (Fig. 55). Here an eccentric disc has a number of different apertures, which, by rotation of the disc, are brought into position concentric with the axis of the lens. The size of the aperture in position is indicated by a number engraved on the part of the projecting disc opposite the aperture.

In many old lenses and in modern lenses for process work,[2] *Waterhouse stops* (Fig. 56) are inserted through a slot in the side of the lens tube.

73. Pupils of an Optical System. The beams of light passing through an optical system are limited by the aperture of the diaphragm. Now the components of the system in front of the stop (lens L_1, Fig. 57) form a virtual image (called the *entrance pupil*, P_i) of the stop D. The entrance pupil is such that the prolongation of rays through L_1, which afterwards are just bounded by the diaphragm D, reach the outline of the entrance pupil. The diameter of the entrance pupil is the effective aperture of the diaphragm just mentioned.

In like manner the components behind the diaphragm (L_2 in Fig. 57) form a virtual image of its aperture, called the *exit pupil* P_e, the

[1] In Fig. 54 the guiding slots of the movable ring are shown radial, which is the usual form. By sloping them it is possible to make the usual markings of apertures almost equidistant (Lan Davis, 1911).

[2] The making of negatives through screens, as used in preparing half-tone blocks or in lithography, requires stops with non-circular openings (generally square), and capable of being variously orientated in the lens tube.

outline of which is reached by the prolongations of those rays which (before passing through L_2) just reached the outline of the diaphragm D (E. Abbe, 1890). The two pupils[1] are thus conjugate with respect to the complete lens.

If we suppose the diaphragm aperture gradually reduced to a small opening O on the axis, admitting but a single ray of light, this single ray would be the one originally directed to the point I, the centre of the entrance pupil, and would appear to emerge, after passing through the lens, from the point E, the centre of the exit pupil. The assembly of the different parts of the ray forms what is sometimes called a *principal ray*.

In the particular case where the stop is placed with its centre at the optical centre of the instrument (which frequently happens with symmetrical lenses), the centres of the pupils coincide with the nodal points, but this coincidence does not occur with single lenses, convertible sets, nor telephotos, and in other types of lenses is not always aimed at.

Just as by consideration of nodal and focal points it is possible to determine the dimensions of the image without considering the construction of the optical system forming it, so by consideration of the pupils it is possible to determine the perspective and the centre of projection of images without having to be concerned with the optical system. The pupils in fact determine which of the rays are used in the formation of the image, without upsetting in any way the conclusions that have been drawn, as to the position and dimensions of this image, from the positions of the nodal points and the foci.

[1] The pupils must not be confused with the windows (German, *Luke*), consideration of which is less frequent in treating of photographic lenses. The windows are the images formed by the two systems L_1 and L_2 of the aperture limiting the field of view (the mount of the lens or the aperture of some attachment to the lens), and thus correspond with the field stops in observational instruments.

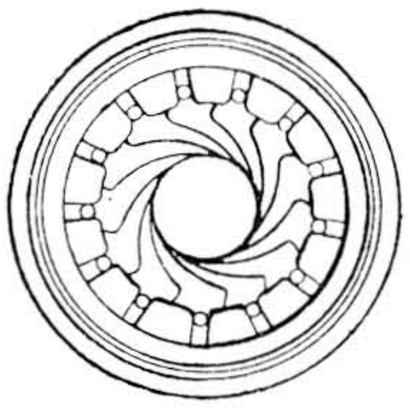

FIG. 54. IRIS DIAPHRAGM

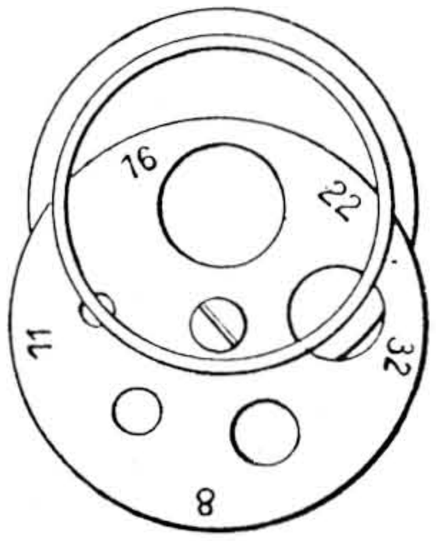

FIG. 55. ROTATING DIAPHRAGMS

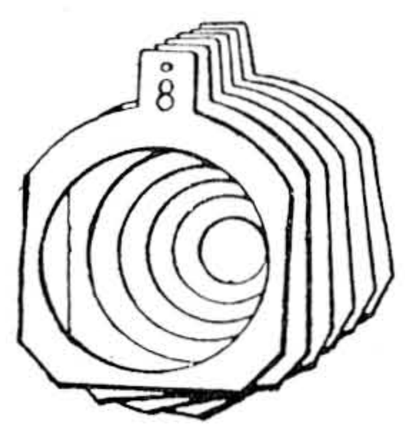

FIG. 56. WATERHOUSE DIAPHRAGMS

74. Photographic Perspective. The photographic image is an exact perspective rendering of the objects represented, the viewpoint of which, relatively to the objects, is the centre of the entrance pupil; relatively to the image, the viewpoint is usually identical with the nodal point of emergence.

Consider (Fig. 58) the two conjugate planes QQ' of an optical system represented by its nodal points, foci, and pupils, and let us find how the points R and S outside the plane Q will

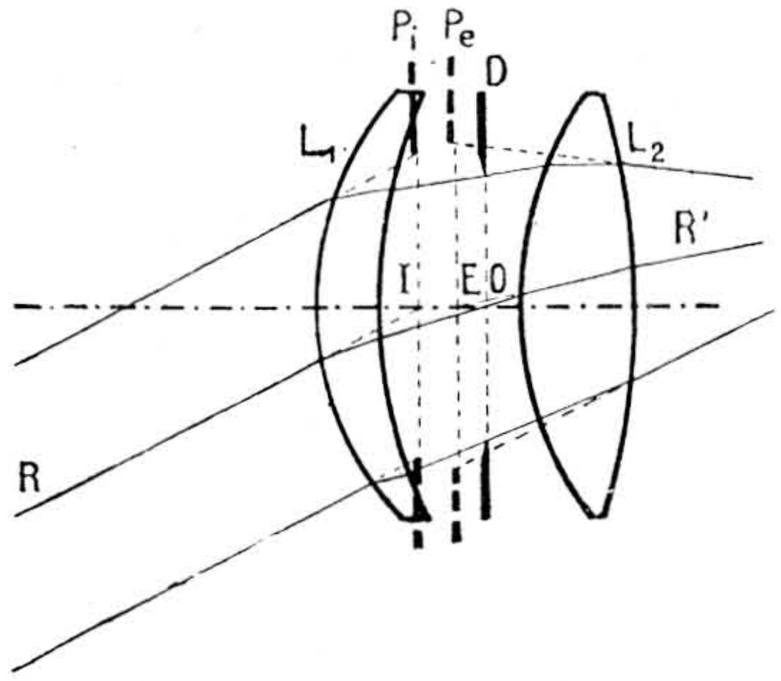

FIG. 57. PUPILS OF A LENS

be reproduced on the plane Q', R' and S' being the respective images of R and S (the graphical construction is indicated by dotted lines) and being themselves outside Q'.

The bundle of rays used in the formation of the image of the point R is limited by the cone with apex R and base P_i (the entrance pupil). After passing through the lens it forms another cone, having the exit pupil P_e as base and R' as apex. These two cones form circular patches (*circles of confusion*) on the *focussed plane* Q

and on its conjugate Q', where the focussing screen or photographic plate is placed. The circles of confusion are conjugate, with their centres r and r' at the intersections of the principal ray with the respective planes, and the ratio of their sizes is equal to the ratio of the ultra-nodal distances of Q and Q' (say n). If the patch at r' is sufficiently small and the photograph is viewed at a sufficiently large distance, the patch is indistinguishable from the geometrical point image of r (the secondary axis corresponding to r has been drawn in Fig. 58).

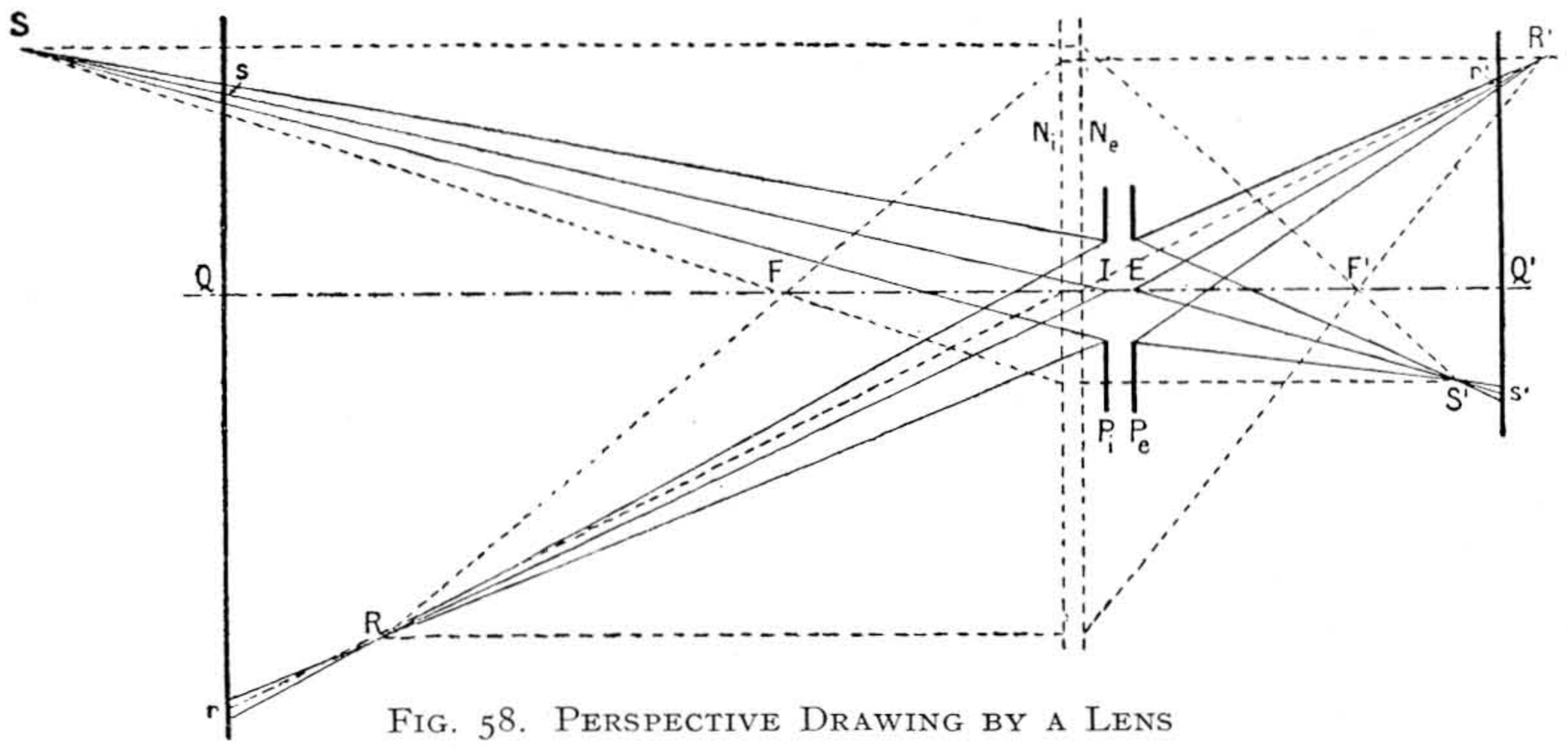

FIG. 58. PERSPECTIVE DRAWING BY A LENS

The photographic image thus coincides with a photograph, made on a scale of reproduction n, of the perspective of the objects projected on the plane Q from a point coinciding with the centre of the entrance pupil. It is thus itself a perspective view if the lens is free from distortion and the diameter of the entrance pupil is a small fraction of the distance of the objects represented, so that stereoscopic effects are avoided (§ 58).

Now it is known that different perspectives obtained by proportional enlargement or reduction have their principal distances proportional to their respective scales (§ 24). The principal distance of the perspective at Q' (the photographic image) is thus the product of the distance of Q from the entrance pupil, multiplied by n. In every case where the object photographed is at a distance from the lens compared with which the distance of the entrance pupil from the nodal point of incidence is negligible, the principal distance of the photograph can be taken as the ultra-nodal distance, and the viewpoint as the nodal point of emergence (L. P. Clerc, 1923).

75. The fact that the construction of the lens (except in the case of very pronounced distortion) and its focal length have no influence on the perspective of the image can be proved by photographing an architectural subject *from the same viewpoint* successively with a pinhole (§ 38) and with lenses of very different focal lengths. The different images thus obtained will be identical except for size.

It is thus incorrect to attribute to the use of a short-focus lens the unpleasant, almost distorted, views which are easily obtained with these lenses. These perspectives, exact but unpleasant, are due solely to the choice of too close a viewpoint. When a photographer possesses only one lens, and that of short focus, he unfortunately tries to get as large a picture as possible, and so approaches closer than he would if he used a long-focus lens. Unless he is specially trained, he does not notice, when examining the view, the exaggerated perspective arising from too close a viewpoint, the brain making the objects appear at their correct relative size, whilst binocular vision places them in their correct relative positions. On the plane images these compensations do not exist, and the so-called distortion becomes actually offensive, especially if the image is viewed from a position other than the correct viewpoint (§§ 25 and 28). These anomalies disappear in stereoscopic vision if the images are viewed at the principal distance.

When it is stated that a lens of short focus gives "faulty perspective," which should be translated as "geometrically correct but unpleasant perspective," it is understood, then, that the photographer has clumsily tried to

compensate for the smallness of the scale of his image by approaching too close to his subject.

The position of the camera should be chosen without any consideration of scale. If, when the viewpoint is chosen, it is found that the lens is not of sufficient focal length to give directly as large an image as desired, the small image should be subsequently enlarged.

76. Depth of Field. Knowing that the image of a point outside the plane focussed on is a circular patch on the image plane, the limits within which the objects should lie in order that these patches (circles of confusion) should be practically indistinguishable from points, can be determined.[1]

First of all, a standard of latitude must be agreed upon; usually a maximum value is assigned to the diameter of the circle of confusion, e.g. 1/250th in. (it is then said that a *sharpness of* 1/250*th in.* is required), a blur which, viewed at 12 in., is indistinguishable from a point by a person having very good sight (§ 34). This convention is purely arbitrary, and is too severe for pictures which are to be viewed at a greater distance, as when placed on a wall, and is not sufficiently severe for a small image which has to be subsequently enlarged by projection or examination under a magnifier (the case of stereoscopic pictures). The image being normally examined from its viewpoint (§ 25), it is logical, at any rate in pictorial photography, to fix the diameter of the circle of confusion which can be tolerated as 1/2,000th of the ultra-nodal distance of the image (J. Thovert, 1904).

77. Relative Depth of Field. Let q and q' (Fig. 58) be the ultra-nodal distances of the object plane Q and its conjugate Q' on which the photographic image is recorded, respectively, F/n the relative aperture of the lens, r and s the ultra-nodal distances of point-objects respectively in front of and behind the plane Q, r' and s' the ultra-nodal distances of their focussed images.

The dimensions of the circles of confusion in the plane of the image (r) and (s) are expressed by

$$\frac{(r)}{F/n} = \frac{r'-q'}{r'}, \quad \frac{(s)}{F/n} = \frac{q'-s'}{s'}$$

In order that the blurs (r) and (s) should have the maximum permissible diameter aq' (the coefficient a being, for example, 1/2,000), the distances r' and s' must be such that

$$\frac{naq'}{F} = \frac{r'-q'}{r'} = \frac{q'-s'}{s'}$$

which may be written

$$1/q' - 1/r' = 1/s' - 1/q' = na/F$$

and as (§ 60)

$$1/q' = 1/F - 1/q, \quad 1/r' = 1/F - 1/r$$
$$1/s' = 1/F - 1/s$$

it follows that

$$1/r - 1/q = 1/q - 1/s = na/F$$

The difference between the extreme convergences (§60) of R and S and the convergence of the plane Q focussed on is then represented by n/2,000ths of the power of the lens, all measurements being expressed in diopters; and the total depth of field (distances between R and S measured parallel to the optical axis) corresponds with a difference in convergence equal to n/1,000ths of the power.

For a lens of 4·4 in. focal length, i.e. 0·11 m., or a power of 1/0·11 = 9·09 diopters, with an aperture of $F/6$, the total tolerance of convergence will be (9·09 × 6)/1,000, or 0·05454 diopters, which has to be divided between the near and far points. If the object focussed on was at 197 in. (5 m.) with a convergence of 1/5 = 0·2 diopters, the convergences of the two limits of depth of field will be 0·20 ± 0·02727, corresponding with object distances of 1/0·22727 and 1/0·17273, or 4·40 and 5·80 m. (173 and 229 in.) respectively.

A table of reciprocals of numbers from 1 to 1,000 will be useful for making calculations rapidly and of sufficient accuracy in problems relating to depth of field.

It may be said that the depth of field is that portion of space from which the lens aperture is viewed under an angle approximately constant within the limiting angle of confusion (A. Jonon, 1925).

It should be noted that the sharp field extends less in front of the plane focussed on than behind it (24 and 36 in. in the example above).

Calculations of a similar degree of simplicity enable us to work out the aperture at which the lens must be used in order to give a sharp image of objects at different distances from the lens, and on what plane the lens ought to be focussed. The convergences of the extreme points at

[1] The calculations given here, in conformity with tradition, are based on geometrical optics, and should not, therefore (§ 38), be considered to give rigorously correct results.

distances of 80 and 320 in. (2 and 8 m.) respectively, are $\frac{1}{2} = 0{\cdot}5$ and $\frac{1}{8} = 0{\cdot}125$ diopters. The difference is thus 0·375 diopters. In order that the tolerance in convergence may be equal to this, which represents 375/9·09 thousandths of the power of the lens (say 41/1,000) the lens must be stopped down to $F/41$. In practice, the nearest marked aperture of the iris, F/45, is used, and this will give ample guarantee of the sharpness and depth required. The distance to focus on will be given by the mean of the extreme convergences $(0{\cdot}500 + 0{\cdot}125)/2 = 0{\cdot}312$ corresponding with a distance of 1/0·312 m. = 3·2 m. (126 in.).

78. Absolute Depth of Field. To conform to tradition we shall deduce the formulae for depth of field in terms of an absolute diameter[1] of the circle of confusion e (e.g. $e = 1/250$th in.), and not, as above, a constant fraction of the ultra-nodal distance of the plane of the photographic plate.

Keeping the same notation as in the preceding section, and calling (R) and (S) the image patches projected on the plane Q by beams having their apices at R and S, and bounded by the diaphragm, these are given (§ 58) by the relations

$$\frac{R}{F/n} = \frac{q-r}{r}, \quad \frac{S}{F/n} = \frac{s-q}{s}$$

but if the image Q' of the plane Q is reduced on a scale $1/m$, which implies that $q = (m+1)F$, the diameters (r) and (s) of the images are equal to $(R)/m$ and $(S)/m$ respectively. If these are to be equal to the maximum diameter e, then (R) and (S) are equal to me, and r and s (the ultra-nodal distances of the near and far planes which will be rendered sharply) will be calculated from

$$\frac{em}{F/n} = \frac{q-r}{r} = \frac{s-q}{s}$$

$$q/r = 1 + nme/F, \quad q/s = 1 - nme/F$$

whence, after simplification

$$r = \frac{(m+1)F^2}{F+nme} \qquad s = \frac{(m+1)F^2}{F-nme}$$

Using the same numerical values as in the previous example, all distances being reduced to metres and taking 1/250th in. (0·01 cm.) as the maximum diameter of the circle of confusion, we shall find, for the case of an object at 197 in. (5 m.),

$$m + 1 = \frac{500}{11} = 45{\cdot}45 \quad m = 44{\cdot}45$$

$$r = \frac{45{\cdot}45 \times 11 \times 11}{11 + (6 \times 44{\cdot}45 \times 0{\cdot}01)} = \frac{5{,}500}{13{\cdot}667}$$

$$= 402 \text{ cm. (160 in.)}$$

$$s = \frac{45{\cdot}45 \times 11 \times 11}{11 - (6 \times 44{\cdot}45 \times 0{\cdot}01)} = \frac{5{,}500}{8{\cdot}333}$$

$$= 660 \text{ cm. (260 in.)}$$

giving a more extensive field of sharp definition than previously calculated, because the tolerance of definition is much greater in this case.

Knowing that the near and far planes of an object are at the ultra-nodal distances r and s respectively, the plane to be focussed on is given by

$$q = \frac{2rs}{r+s}$$

In other words, the distance on which to focus is obtained by dividing twice the product of the distances of the near and far planes from the lens, by the sum of these two distances.[1]

The relative aperture to give the desired sharpness once the focus is fixed can be calculated: we omit the calculation but give the result—

$$\frac{1}{n} = e\,\frac{2rs - F(r+s)}{F^2(s-r)}$$

Unless the near plane is exceedingly close, the second term of the numerator is negligible compared with the first. The practical formula which, moreover, leads to a smaller aperture than is necessary, and thus gives complete assurance that the sharpness will be sufficient, reduces to—

$$n = \frac{(s-r)F^2}{2ers}$$

In other words, to obtain the denominator n of the fraction F/n, expressing the relative aperture, multiply the focal length by itself, then by the distance between the near and far planes (depth of field to be photographed), and divide the product by the number obtained by multiplying twice the diameter of the permissible circle of confusion by the product of the two distances mentioned.

[1] In scientific photography the limit of tolerance would be the limit of resolution of the sensitive surface used.

[1] The distance thus calculated is absolutely independent of the tolerance fixed for the definition. The rigorous calculations of physical optics give the same result in this case as the approximations of geometrical optics.

If, for example, objects at 120 and 280 in. from the lens are to be photographed with a 6 in. lens, the plane to focus on is at a distance

$$\frac{2 \times 120 \times 280}{400} = 168 \text{ in.}$$

and for a circle of confusion of 1/250th in., the relative aperture will be $F/22$.

$$\frac{(280 - 120) \times 6 \times 6}{2 \times \frac{1}{250} \times 120 \times 280} = \frac{576}{672} \times 25 = \frac{576}{26{\cdot}88}$$

$$= 21{\cdot}5$$

79. If the camera carries a scale by which the change in camera extension can be measured, the above calculations can be avoided.

Having focussed successively the near and far planes and noticed each time the position of the movable part on the scale, the camera is set to the mid-way position and will then be correct. To obtain a degree of sharpness equal to 1/250th in., the F/No. is taken as one-eighth the number of thousandths of an inch the camera extension has been altered (G. Cromer, 1911).

If, for example, the movement is 0·16 in. (= 160/1,000ths), the aperture will be $F/20$.

For a sharpness of 1/125th in. or 1/500th in., half or double the above number must be taken, i.e. $F/10$ or $F/40$ respectively in the above case.

80. Factors Affecting Depth of Field. The depth of field (distance between near and far planes in focus) can be expressed by one or other of the following formulae, according as the permissible circle of confusion is a constant fraction a of the ultra-nodal distance of the image, or a fixed amount e. The formulae give the difference $(s - r)$ of the distances previously calculated—

$$(1)\ \frac{2naq^2F}{F^2 - n^2a^2q^2} \qquad (2)\ \frac{2neq(q - F)F^2}{F^4 - n^2e^2(q - F)^2}$$

in each of which the second term of the denominator is generally negligible unless q is very great, so that we can replace these by the simpler formulae below, which lead to a slightly smaller value—

$$(1A)\ \frac{2naq^2}{F} \qquad (2A)\ \frac{2neq(q - F)}{F^2}$$

In this form it is seen at once that, all conditions remaining the same, with the exception of the one factor considered[1]—

(1) Depth of field is less with a lens of greater focal length; it is inversely proportional to F if the tolerance is defined as an angular constant, and inversely to the square of F (i.e. $F \times F$) when the tolerance is fixed by an absolute value.

(2) Depth of field is proportional to n and is thus greater the smaller the stop.

(3) Depth of field is greater for greater object distances, being proportional to the square of q (i.e. $q \times q$).

(4) Depth of field, based on the value of a or e, is greater the less exacting the requirements of definition are.

81. It is interesting to know, at least from a practical point of view, if, having to photograph an object of a certain depth, from a given point of view, a lens of focus to give a required scale of image can be used, or whether it is preferable to use a lens of very short focus, giving a small image which is afterwards enlarged.

The method of calculation used in § 77 shows clearly that (neglecting loss of sharpness on enlargement) the small lens is decidedly more advantageous, for, at an equal relative aperture, it will give, after enlargement, an image having much greater depth of field than the image obtained directly on the same scale.

We have, in fact, seen that

$$1/r - 1/q = 1/q - 1/s = na/F$$

It is seen that, when photographing (the lenses having the same F/No.), an object from the same viewpoint (r and s constant), the angular tolerance a varies proportionally to F instead of being constant. But it would require to be constant to obtain the same definition (in absolute value) after magnification of the small image (in the ratio of the ultra-nodal distances of the image planes) to bring it to the same dimensions as the large image photographed directly.

Taking the same numerical data as in § 77, but supposing this time that the focal length is 13·2 in. (0·33 m.), or a power of 3·03 diopters, we will find the depth of field for the same circle of confusion after equalization of the sizes of the two images. The distance of the plane focussed on being the same in the two cases, the sizes of the two images are proportional to the respective ultra-nodal distances, and it will be sufficient to give a the same value, 1/2,000th. The total tolerance of convergence is thus found to be $(3{\cdot}03 \times 6)/1{,}000 = 0{\cdot}0182$ diopters, and consequently the convergences of the limits of

[1] The application of the laws of physical optics leads to the result that relative depth of field is independent of the focal length F, and is inversely proportional to the square of the diameter of the effective aperture (T. Smith, 1928).

the field are (0·2 ± 0·0091) diopters, corresponding with ultra-nodal distances of 1/0·2091 = 4·78 m. (188 in.) and 1/0·1909 = 5·24 m. (206 in.) with a total depth of field of 18 in. only, instead of 48 in. in the case of the lens of 4·4 in. focal length.

It remains to examine whether, to obtain a reproduction at the same size by direct photography, supposing that aesthetic considerations allow an alteration of viewpoint, there is any advantage as regards depth of field, in using a lens of shorter focus, or if, on the contrary, it is preferable to get farther back from the view and use a long-focus lens. Contrary to the general opinion, it is still the shorter focus lens which possesses the greater depth of field.[1]

82. Hyperfocal Distances. Particularly interesting problems in the application of the depth of focus formulae are the determination of the distance at which the lens must be focussed in order that the far plane in focus may be at infinity, and the finding of the distance of the near plane in these circumstances.

The distance of the plane focussed on which satisfies this condition for a lens of given focal length and aperture, is usually called the *hyperfocal distance for that aperture*. Let it be said at once that the hyperfocal distance will have different values according to the degree of unsharpness which can be tolerated.[2]

If we agree to adopt as the tolerance a constant fraction a of the ultra-nodal distance of the image (still supposing that the pupils coincide with the nodal points), the hyperfocal distance H of a lens of focal length F and aperture number n, is easily calculated if we consider that the convergence of the far plane is zero, this being at infinity. Calling l the distance to the near plane, the preceding formulae for the depth of field become[1]

$$1/l - 1/H = 1/H = na/F$$

whence $H = F/na$ and $l = F/2na = H/2$

Let us calculate, for example, on what distance a lens of 4·4 in. focal length at $F/6$ ought to be focussed in order to give sharp focus right up to the horizon, the image of a point being considered sharp when its diameter does not exceed 1/1,000th of its distance from the lens. All we need do is to divide the focal length 4·4 in. by the F/No. 6 and multiply by 1,000, which gives

$$\frac{4{\cdot}4 \times 1{,}000}{6} = 733 \text{ in. (61 ft.)}$$

The camera, once set for this distance, would give, with the same criterion of definition, a sharp image of all objects from 30½ ft.

It may be remarked that when the limit of sharpness is defined by an angular value the hyperfocal distance is proportional to the focal length and inversely proportional to the F/No. n. It is also greater the more severe the standard of good definition is.

This is easily explained by noticing that the *hyperfocal distance* thus defined is the *distance from which the effective aperture subtends the angle of tolerance*. If, for example, the angle is 1/2,000th (circle of confusion = 1/2,000th of the principal distance), the hyperfocal distance is 2,000 times the useful aperture of the stop. Similarly,if the angle were 1/1,500th or 1/1,000th, the hyperfocal distance would be 1,500 or 1,000 times the useful aperture.

83. If we agree to adopt, as limit of definition, a diameter e for the circle of confusion, we calculate H by the condition that s is infinitely great, which requires the denominator of the fraction for s (§ 78) to be zero. so

$$F = nme, \text{ whence } m = \frac{F}{ne}$$

[1] From the formulae of § 77, remembering that $q = (m + 1)F$, it is possible to deduce the expression for the total depth of field $(s - r)$

$$s - r = \frac{2\,a\,F\,(m+1)^2 n}{1 - (m+1)^2 a^2 n^2}$$

The scale of reduction m being constant, the camera extensions are proportional to the focal lengths, and in order to have the same limits for the diameter of the circle of confusion in the photographs taken with lenses of different focal lengths, the product aF must be constant = k (say), whence $a = k/F$, and the above expression reduces to

$$s - r = \frac{2\,k\,(m+1)^2 n}{1 - (m+1)^2 n^2 (k/F)^2}$$

The F/No. n being supposed constant, it is seen that, if F increases the denominator increases and $(s - r)$ decreases.

[2] In addition to these two factors (aperture and tolerance) affecting the *hyperfocal distance* of a given lens, an additional source of uncertainty arises from the fact that, although the greater number of writers have adopted the above definition, some (e.g. Moëssard) have defined it as the distance of the near plane when the far plane is at infinity, i.e. half what we call the hyperfocal distance.

[1] This value could also be found by finding the value of q which in expression (1), § 80, makes the denominator zero, and thus gives an infinite value to the depth of field.

As the plane focussed on, reduced in the ratio $1/m$, is at an ultra-nodal distance $(m + 1)F$, we get[1] $H = F(F/ne + 1)$, and for the corresponding length l, by replacing m by the value above in the expression for r,

$$l = H/2$$

Let us calculate, for example, the hyperfocal distance in the same case as above, but with a circle of confusion of 1/250th in.

All measurements being expressed in inches (any other unit could be adopted as long as it was used throughout the calculation) the reciprocal of the tolerance is 250. The focal length, 4·4 in., is multiplied by 250 and divided by the F/No. 6, giving 1,100/6 = 183·5. Increase this

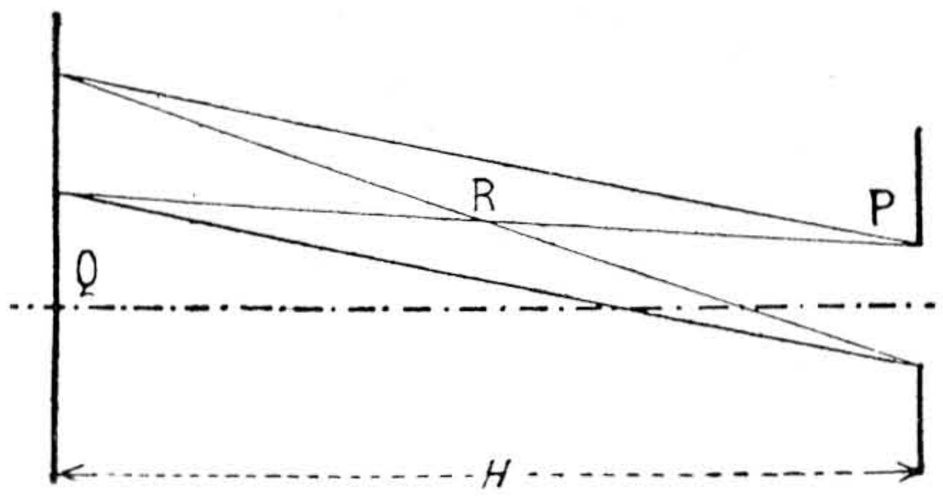

FIG. 59. GEOMETRY OF HYPERFOCAL DISTANCE

by 1 and multiply by the focal length, and we get for the hyperfocal distance 184·5 × 4·4 = 812 in. = 67½ ft.

The camera being focussed on this distance, all points at least half this distance from the camera, viz., 33 ft. 9 in., will give sharp images, which is usually expressed by saying that the camera thus set gives sharp images from 33 ft. 9 in. *to infinity*.

It may be remarked that, when the limit of sharpness is thus defined as an absolute value, the hyperfocal distance is, for equal relative apertures, proportional to the focal length multiplied by itself,[2] i.e. for lenses of focal length half, double or triple that of the lens in the example, the hyperfocal distances would be respectively one-quarter, four times, and nine times, the value calculated above.

[1] We should get the same value by putting the denominator in expression (2), § 80, equal to zero, and get

$$q - F = F^2/ne, \text{ whence } q = F^2/ne + F$$

[2] This would only be exactly true if, instead of expressing the hyperfocal distance in the form of an ultra-nodal distance, it was expressed as an ultra-focal distance, $H' = F^2/ne$.

If the diameter of the aperture is reduced to half or one-quarter its value, the hyperfocal distance will be reduced to half or quarter the value calculated above.

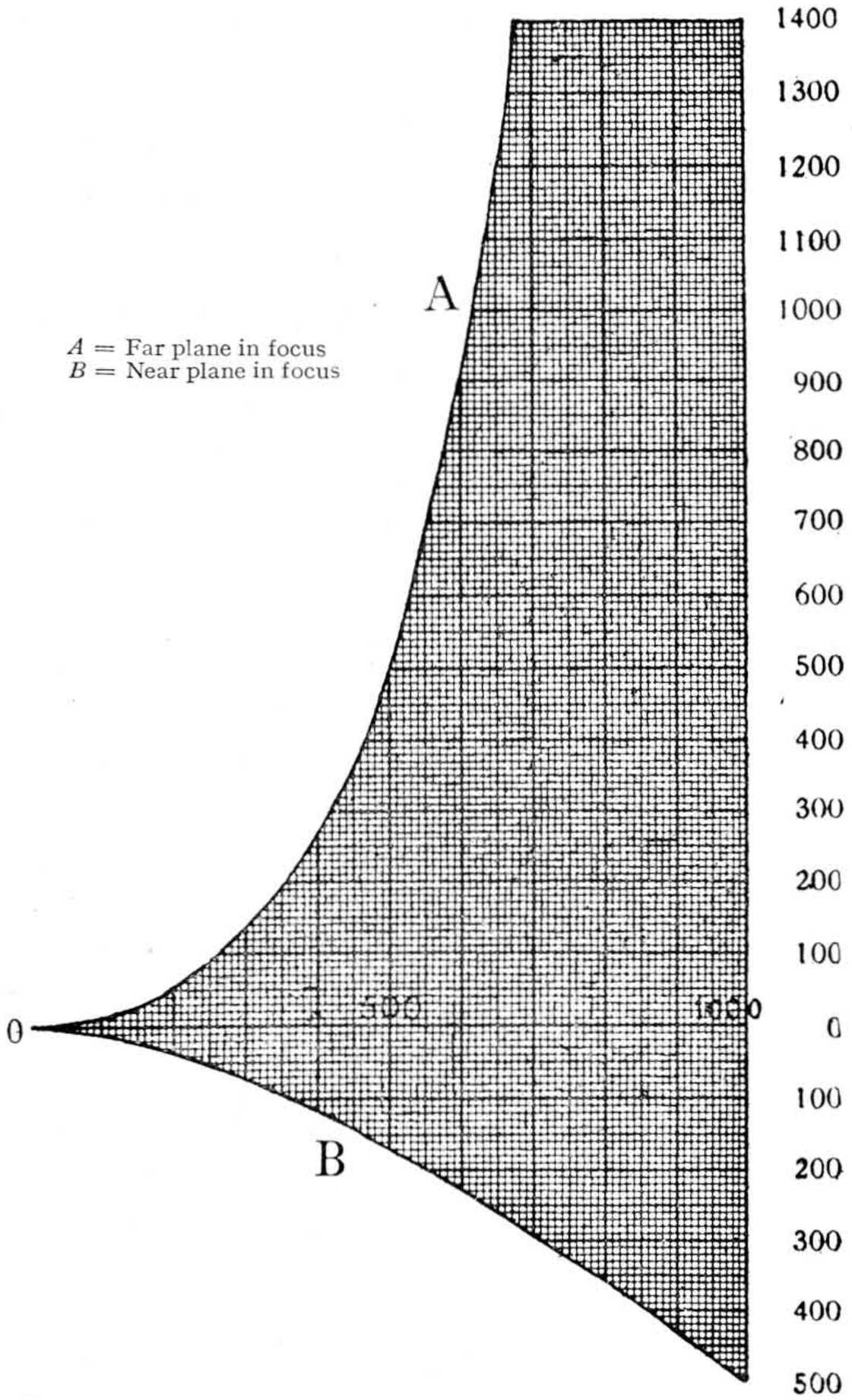

Depth of field (circle of confusion = 1/1,000 the camera extension). The unit of length is the diameter of the effective aperture

FIG. 60. CHART OF DEPTH OF FIELD
(Scheffer)

If, instead of fixing the limit at 1/250th in., it was taken as 1/125th or 1/500th in., the hyperfocal distance would be half or twice respectively the former value.

In every case the distance of the near plane is half the hyperfocal distance.

84. The formula for hyperfocal distance can be obtained directly without using the formulae for depth of field.

Let P be the entrance pupil of the lens (Fig. 59). Every parallel pencil of light (i.e. coming from an infinitely distant point) will cut planes perpendicular to the axis (and Q in particular) in a circle of the same diameter as that of the pupil. The beam, limited by the pupil and having as apex any point R half way between Q and the pupil, cuts Q in a circle of the same size (which will coincide with the former if R is on the principal ray of the beam). If we focus the lens on Q, the condition that all point-objects from R to infinity shall be sharp is that the images of the circles on Q reduced $1/m$th, must not exceed the limit e assigned to the diameter of the circle of confusion. Now, the diameter of the pupil is F/n; the condition is therefore $F/n \times m . = e$, and gives $m = F/n \times e$, whence, the distance H of the plane reduced $1/m$th being $(m + 1)F$,

$$H = (F/ne + 1)F$$

85. Tables and Abaci for Finding Depths of Field and Hyperfocal Distances. To avoid calculations of depth of field and hyperfocal distances a number of numerical tables, abaci, and calculating rules or discs have been made, the forms of which are infinite.

As examples we reproduce two abaci corresponding with the two methods of expressing tolerance in definition.

In Fig. 60 (W. Scheffer, 1909), constructed for a circle of confusion equal to 1/1,000th the camera extension, the unit of length adopted is the diameter of the effective aperture of the lens, say F/n. Thus, for a lens of 6 in. focal length at $F/5$ the diameter is 1·2 in. The lens being focussed at 180 in., i.e. 150 times the effective diameter, the vertical line through the mark 150 on the horizontal line is followed till the curves are reached corresponding to the depth of field in front (on the lower curve) and behind (on the upper curve); in this case giving the divisions 20 and 30, i.e. $20 \times 1{\cdot}2 = 24$ in., and $30 \times 1{\cdot}2 = 36$ in. Thus the distances of the near and far planes are $180 - 24 = 156$ in., and $180 + 36 = 216$ in.

This graph shows plainly that, with the convention adopted, the depth of field depends only on the diameter of the useful aperture. It also shows that the depth of field in front of the plane focussed on is always less than the depth behind.

Graphs made on the assumption of a fixed diameter for the circle of confusion (usually 1/250th in.) are necessarily much more complicated.

The abacus given below (L. P. Clerc, 1923) is used with the table reproduced here.

In the upper part of the table, follow the line corresponding to the degree of sharpness required (from 1/10th to 1/40th mm., 1/250th to 1/1,000 in.) until the column giving the focal length is reached. Follow this downwards until the horizontal line indicating the aperture is reached, and note the letter.

On the abacus (Fig. 61) follow the oblique line (ascending from left to right) designated by the letter obtained from the table, until its intersection with the oblique line (descending from left to right) corresponding with the distance on which the lens is focussed is reached. Where they cross, follow the horizontal and vertical lines which indicate on their scales the

		Focal Lengths in Millimetres															
Degree of sharpness required	1/10 mm.	45	56	67	78	90	112	135	156	190	225	270	310	380	445	440	625
	1/20 ,,	33	40	48	55	67	80	95	110	135	160	190	220	270	315	380	440
	1/30 ,,	25	30	40	45	52	65	78	90	110	130	155	180	220	260	310	360
	1/40 ,,	22	28	33	40	45	56	67	78	95	112	135	155	190	225	270	310
Relative aperture	$F/64$	—	—	—	—	—	A	B	C	D	E	F	G	H	I	J	K
	$F/45$	—	—	—	—	A	B	C	D	E	F	G	H	I	J	K	L
	$F/32$	—	—	—	A	B	C	D	E	F	G	H	I	J	K	L	M
	$F/22{\cdot}5$	—	—	A	B	C	D	E	F	G	H	I	J	K	L	M	—
	$F/16$	—	A	B	C	D	E	F	G	H	I	J	K	L	M	—	—
	$F/11{\cdot}2$	A	B	C	D	E	F	G	H	I	J	K	L	M	—	—	—
	$F/8$	B	C	D	E	F	G	H	I	J	K	L	M	—	—	—	—
	$F/5{\cdot}6$	C	D	E	F	G	H	I	J	K	L	M	—	—	—	—	—
	$F/4$	D	E	F	G	H	I	J	K	L	M	—	—	—	—	—	—
	$F/2{\cdot}8$	E	F	G	H	I	J	K	L	M	—	—	—	—	—	—	—
	$F/2$	F	G	H	I	J	K	L	M	—	—	—	—	—	—	—	—

distance of near and far planes in focus, respectively. Values intermediate between those given in the table or on the abacus can be estimated (between the nearest values marked).

If using, for example, a lens of 135 mm. (5·4 in.) focal length, we wish to know the limits of the field when focussing on a plane at 5 m. (197 in.) taking 0·1 mm. (1/250th in.) as standard of definition of a point, the aperture being *F*/16, follow the line *F* (indicated on the table for these conditions) to the oblique line corresponding with 5 m.; from their intersection follow the vertical and horizontal lines, estimating their intermediate values; the readings

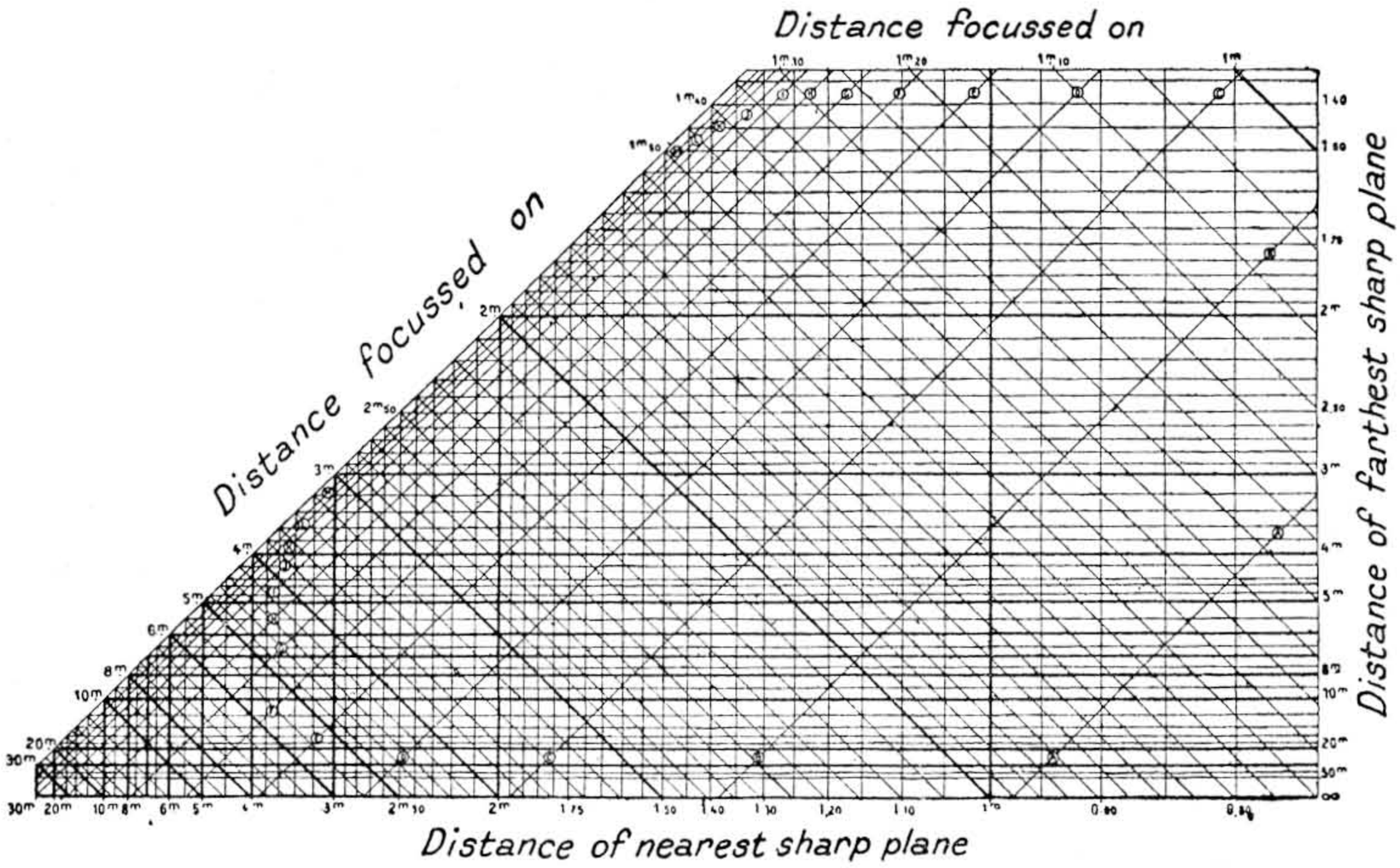

FIG. 61. CHART OF DEPTH OF FIELD
(Clerc)

are 3·45 m. (136 in.) on the lower scale and 9·2 m. (363 in.) on the vertical scale on the right. The depth of field is thus 9·20 – 3·45 m. = 5·75 m. (226 in.), i.e. 1·55 m. (61 in.) in front and 4·20 m. (165 in.) behind the plane focussed on.

To know at what distance to focus and at what aperture to set the diaphragm to obtain images with a standard of definition of 1/10 mm. (1/250th in.), between 2·50 m. (99 in.) and 6 m. (237 in.), look for the intersection of the vertical 2·5 and the horizontal 6, which is midway between 3·40 and 3·60, so that the focus should be set for 3·50 m. (138 in.). The point of intersection occurs between the obliques *E* and *F*, so that the lens of 135 mm. (5·4 in.) focal length should be stopped down between *F*/22·5 and *F*/16, the smaller of the two ensuring fulfilment of the conditions.

Finally, to determine the hyperfocal distance with the same standard of definition (1/10 mm. or 1/250th in.) for a lens of focal length 135 mm. (5·4 in.), stopped down to *F*/11 (letter *G*), follow the inclined line from right to left to the intersection of the line *G* with the lower scale of distances. This inclined line meets the scale of distances for the focussed plane at the division 16 metres, which is the required hyperfocal distance.

86. Influence of the Corrections of the Lens on the Depth of Field and Hyperfocal Distance. It cannot be too strongly emphasized that the depth of field and hyperfocal distances, calculated from the formulae given in the foregoing paragraphs or read on tables and abaci from them, useful as they are to guide the photographer, by indicating the kind of variation which will arise from an alteration in working conditions, have only *relative accuracy*.

On the one hand we have supposed, in deducing these formulae, that the nodal points are coincident with the centres of the corresponding pupils, which is not always the case (the separation may be considerable for telephoto and similar lenses). On the other hand, we have implied that the lens is an ideal (never realized in practice) having a flat field free from all aberrations. Finally it is supposed that the circles of confusion are uniformly illuminated,

while, in fact, quite a large patch may give a sharp image if the light is concentrated in a small area.

It has emphatically been stated that depth of field is necessarily the same for different lenses of the same focal length and aperture, a conclusion to which an examination of the formulae does, in fact, lead. These two factors are certainly those of the most importance, but account must also be taken of the fact that, in practice, a lens perfectly corrected has nearly always much less depth of field than a lens having residual aberrations, chromatic (D. Brewster, 1867), or spherical aberration, these lenses giving more homogeneous images better suited for pictorial photography.[1]

Finally, a lens having considerable curvature of field would appear to possess more depth than is given by the classic formulae when the near planes come close to the edge of the field of the lens.

87. Fixed-focus Cameras. In many very cheap cameras for beginners, no adjustment for focus is provided. The camera is adjusted by the maker to focus on the hyperfocal distance for the largest aperture of the lens, the limit of definition being fixed at 1/125th in. The lenses used on these cameras being nearly always simple or achromatic, very poorly corrected, with maximum aperture rarely exceeding $F/16$, the hyperfocal distance is very short, and consequently the minimum distance of sharp objects (half the hyperfocal distance) is small enough to allow almost all subjects (except portraiture, properly so-called) to be attempted.

[1] Compare, for example, two lenses of the same focal length and aperture, one, A, free from spherical aberration, the other, B, having positive spherical aberration at apertures greater than $F/16$. The aberration of B being positive, the caustics of each beam will be formed between the sharpest image and the lens, approaching the latter as the aperture increases, and thus affecting only the lower limit to the depth of field. At $F/16$ the lenses give equal depth; at an aperture slightly larger the caustics due to spherical aberration make their appearance with B. A beam limited by a caustic would be restricted more rapidly than one limited by a cone, so that the depth of field would diminish less quickly with the uncorrected lens. If objects situated in front of or behind the focussed plane are considered, this difference between the two lenses increases as the aperture is increased. At a certain aperture the caustic, meeting the sensitive surface, gives practically a constant circle of confusion, and thus sets an almost invariable lower limit to the depth of field, whilst with the perfect lens every increase of aperture increases the diameter of the circles of confusion, and thus limits the depth of field. A negative aberration would affect the posterior limit in the same way (C. Welborne Piper, 1903).

For example, with a lens of 2·4 in. focal length at $F/16$, the hyperfocal distance, corresponding to a sharpness of 1/125th in., is (from the formula of § 83) 47 in., and all objects will be sharp from 24 in. from the camera, which will amply suffice for all needs. Similarly, for a 6 in. lens the hyperfocal distance is 283 in., so that everything will be sharp from 142 in. This would rule out many classes of work, but the depth of field could be increased by stopping down still further.[1]

This interesting property of lenses of short focus and small aperture has frequently given rise to the unfortunate expression *fixed-focus lens*, which has led to much misunderstanding. It must therefore be insisted that this action is not the result of any special form of lens, but of the general application of the laws governing depth of field.

88. Focussing Scales. Portable cameras for use generally in the hand are not suitable for focussing the image on a focussing screen, and are therefore provided with a scale graduated in object distances so that the focus can be set for any distance within the limits of the scale.

The mark on this scale corresponding with objects at a great distance (generally indicated by ∞, the algebraic symbol for an infinitely great number) in some cases[2] indicates the focal plane for objects on the horizon, and, in others, the focus for objects at the hyperfocal distance of the lens at the maximum aperture (usually adopting 1/250th in. as the circle of confusion). It must be remembered that when the focus is set for infinity the nearest plane that is sharp is at the hyperfocal distance, while when focus is set for the hyperfocal distance the nearest plane that is sharp is at half this distance

The distances on the scale are often chosen quite arbitrarily. It would be better to divide the hyperfocal distance (allowing 1/2,000th the camera extension as the circle of confusion) by

[1] Closing the diaphragm on a fixed focus camera does not bring into full use the depth of field corresponding with the aperture, since focussing which ought to be made for the corresponding hyperfocal distances is fixed for the hyperfocal distance of the maximum aperture. It would, however, be possible, without too much complication, to couple the diaphragm with the focussing movement automatically. To do this (G. Cromer, 1912) the stops are made in a sliding plate which increases in thickness by the required difference in focus for each aperture. The plate, acting as a cam, displaces the lens, which is pressed against it by a spring.

[2] Some makers indicate the focus both for infinity and the hyperfocal distance, the latter being indicated by a mark of different colour or the letter H.

the consecutive numbers 0, 1, 2, 3, . . . , i.e. infinity, the hyperfocal distance, half, one-third, one-quarter, . . . the hyperfocal distance. Such a scale possesses an interesting property when used with the appropriate diaphragm and when the tolerance of sharpness used in its construction is accepted. When the focus is adjusted for one of the distances on the scale, the depth of field extends to the contiguous distances.

If, for example, the lens is of 5 in. focal length and $F/8$ aperture (hyperfocal distance 788 in.

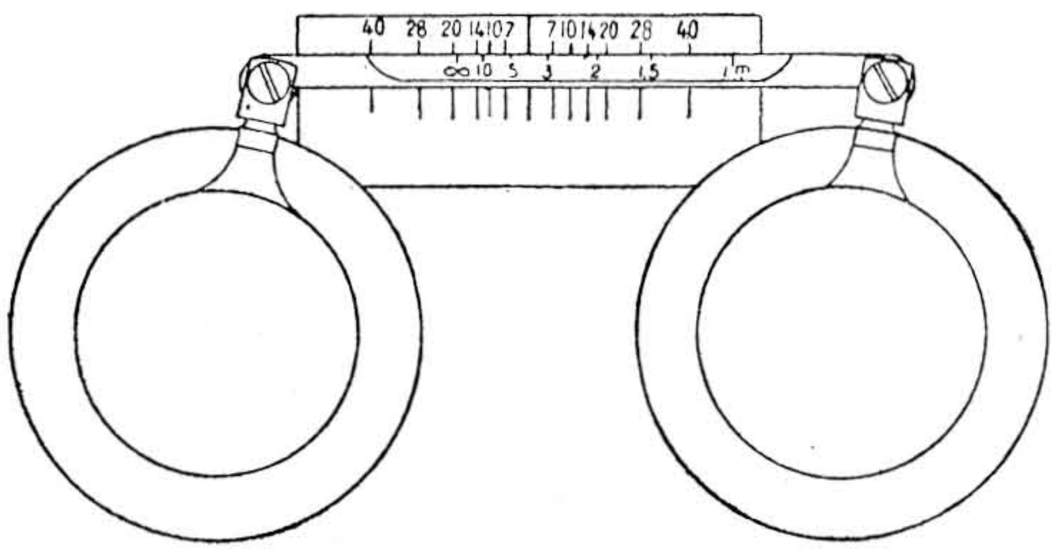

FIG. 62. DEPTH FOCUSSING SCALE
(Piper)

for a circle of confusion of 1/250th in.), and the scale is marked ∞, 66′, 33′, 22′, 17′, 13′, 11′, 9′ 5″, 8′ 3″, 7′ 4″, 6′ 7″, 6′, 5′ 6″, 5′ 1″, 4′ 8″, 4′ 4″, 4′, etc., when set for 13′ all objects between 11′ and 17′ will be sharp.

A still better arrangement, giving the limits of the field for all apertures, whatever the distances scaled, has been suggested by C. Welborne Piper and used by some makers. Fig. 62 shows its application to a stereoscopic camera where the two lenses are adjusted simultaneously by means of a connecting rod carrying the scale of distances and moving over a scale of apertures marked off on each side of the zero indicating the sharp focus. Two marks are used for any aperture number, and indicate the limits of the field on the focussing scale. For example, in the position illustrated the lens focussed at 4 m. (158 in.) gives at $F/14$ a sharp image from 2·50 m. (100 in.) to 10 m. (400 in.). If it were required to photograph a subject extending from 3 to 5 m. (118 to 197 in.) from the lens, the zero of the aperture scale will be placed midway between 3 and 5 on the scale of distances, and the best general focus is assured. The 3 and 5 marks then come within the marks for $F/7$, so that there will be sufficient depth at that aperture.

With slight variations in construction, this arrangement is applicable to all focussing scales, particularly when they are magnified relatively to the actual displacement of the lens.

89. Depth of Focus.[1] If the plane on which the image is formed is slightly separated from the position of the sharp image of a point, the image will be a disc which can be considered as a geometrical point if its diameter does not exceed a certain fraction a of the ultra-nodal distance of the sharp image, or does not exceed a constant limit e (§ 76).

Knowing (Fig. 63) the diameter of the aperture F/n and the ultra-nodal distance q' of the focussed image (supposing again that the pupils coincide with the nodal planes) it is easy to calculate the distance v, the error in the position of the plate which can be tolerated. Calling the diameter of the disc of confusion at Q_2 (Q'), consideration of the similar triangles having their apices at Q' gives

$$\frac{(Q')}{F/n} = \frac{v}{q'}$$

Now, according to the convention adopted in fixing the tolerance in sharpness, we have

$$(Q') = aq' \quad \text{or} \quad (Q') = e$$

which gives[2]

$$v = \frac{q'^2 \times a}{F/n} \quad \text{or} \quad v = \frac{eq'}{F/n}$$

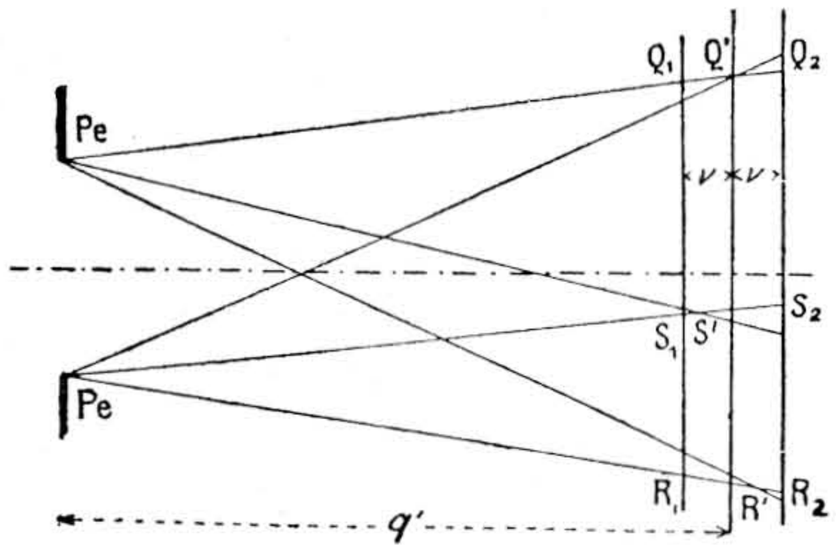

FIG. 63. DEPTH LATITUDE IN THE FOCAL PLANE

The tolerance is the same in front and behind the focus.

The sum of the equal anterior and posterior tolerances is known as the *depth of focus* and the space between the limits is sometimes termed the *focal volume*.

[1] In reading English books and articles, it should be remembered that "depth of focus" usually means depth of field.

[2] Considerations of physical optics ascribe to depth of focus a value proportional to the wave-length of the radiation and expressed as $k\lambda \left(\frac{q'}{F/n}\right)^2$

This tolerance is greater the smaller the useful aperture of the stop (other things being equal). When, for an equal stop, the image is formed at a greater distance (e.g. in photographing a nearer object or using a longer focus lens) the tolerance in focussing is greater.

It is necessary to add that this latitude can only be made use of in photographing plane objects perpendicular to the axis, or in the photography of objects of negligible depth. *It is impossible to make use of depth of focus and depth of field at the same time.*

If images at R' and S' of points in front of and behind Q are also to be photographed at the same time as Q' it is seen that they will form image patches in one of the limiting planes, of diameter greater than the tolerance.

In particular it should be remembered that depth of focus has already been taken into account when a lens having curvature of field is used.

90. Effect of Relative Aperture on the Brightness of the Image. In the photography of a landscape in which all the objects are at a very great distance from the lens, the brightness of the image at the centre of the field (on the optical axis) is, apart from loss by absorption and reflection (§ 56), proportional to the square (product when multiplied by itself) of the relative aperture F/n (§ 71). It is easily seen that, for equal losses in passing through the lens, two lenses of the same focal length but of different effective apertures, give images the brightnesses of which are proportional to the area (or surface) of the effective aperture, which, in fact, limits the section of the parallel beam of light from a distant object utilized in forming the image, just as a tap restricts the amount of liquid passing through. If the diameter of the effective aperture is doubled, tripled, quadrupled, . . . its area will be 4, 9, 16 . . . times as great. The images being of the same size, since the focal length is assumed to be the same in each case, the brightness will vary in the same ratio.

Let us now consider two lenses of the same effective aperture but of different focal lengths. If the focal length of one is double, triple, quadruple . . . that of the other, all dimensions in the plane of the image of distant objects will be doubled, tripled, quadrupled, . . . and consequently the areas will be 4, 9, 16 times as great. Both will receive the same quantity of light, but that formed by the longer lens will be 1/4, 1/9 1/16 . . . as bright, so that the law formulated at the beginning of the section is proved.[1]

In particular, if the stops of a lens have their diameters in geometrical progression with a ratio of 1·414, i.e. are proportional to the numbers

1 1·414 2 2·818 4 5·636 8 11·27 . . .

the areas of the corresponding circles will be doubled at each step, and the illumination at the centre of the image will be doubled when any stop is replaced by the next larger.

In the photography of near objects the effect is more complicated. The brightness of the image is proportional to the solid angle under which the pupil of emergence is seen from the point on the axis in the plane of the image. The expression for the brightness, and a comparison of the brightnesses when the image is formed by lenses of different types, would require a knowledge of the exact position of the exit pupil and the ratio of its diameter to that of the entrance pupil. It is none the less true that if two lenses of the same focal length, of widely different types, give images of the same size of a near object, the intensities of illumination at the centre of the two image. will be in a ratio approximately that of the squares of the relative apertures.

It must be recalled that the illumination of the regions of the image away from the centre decreases very rapidly as the distance from the centre increases (§ 54).

If account is taken of the loss of light in passing through the lens[2] and of that due to

[1] For objects at considerable distances, of which the images are geometrical points (e.g. stars, but not planets), the brightness of the image is proportional not to the square of the relative aperture but to the square of the effective aperture.

[2] The table reproduced below (C. Forch and E. Lehmann, 1928) gives the results of direct determinations of the brightness of the image yielded by some lenses. It may be remarked that the loss of light is less when a yellow filter is added to absorb the violet and blue.

Relative aperture indicated	Relative aperture measured	Equivalent aperture		Transmission %	
		Ordinary plate	Ortho-plate with yellow filter	Ordinary plate	Ortho-plate with yellow filter
$F/2$	$F/2{\cdot}1$	$F/3{\cdot}1$	$F/2{\cdot}7$	46·6	60
$F/2$	$F/2{\cdot}48$	$F/3{\cdot}26$	—	58·1	—
$F/1{\cdot}5$	$F/1{\cdot}75$	$F/2{\cdot}82$	$F/2{\cdot}18$	38·7	65·2
$F/4$	$F/3{\cdot}92$	$F/6{\cdot}2$	$F/5{\cdot}05$	40	60·5
$F/4{\cdot}5$	$F/4{\cdot}73$	$F/5{\cdot}94$	$F/5{\cdot}47$	63·5	75

the partial cutting off of the mount forming the entrance or exit windows, it may happen that of two lenses of nearly equal apertures, e.g. $F/6{\cdot}8$ and $F/6{\cdot}3$, the wider aperture lens, even if slightly more rapid on the axis, has distinctly less rapidity at the edges of the field.

We shall conclude, then, by saying that the rapidity of a lens is *chiefly* determined by its relative aperture,[1] and that of two lenses of apertures $F/7$ and $F/9$ respectively, the first gives an image which at its centre (neglecting loss of light) is brighter than the second in the ratio of $(F/7)^2/(F/9)^2 = 9^2/7^2 = 81/49 = 1{\cdot}65$.

91. Effect of the Scale of an Image on its Brightness. If an object, illuminated equally in all cases, is photographed several times with the same lens at the same aperture but on different scales, by moving the lens closer and closer to the object, it will be found that the image falls off in intensity as the size increases.

Practically it may be considered that for an enlargement m, the intensity of illumination is inversely proportional to $(1 + m)^2$.

This amounts to saying that when the image is formed, not in the focal plane, but at a distance $(m + 1)F$ from the nodal point of emergence, the relative aperture of the stop F/n is reduced[2] to $F/n(m + 1)$.

As a particular case, if an object is photographed under the same illumination from a great distance, so that its image can be considered as lying in the focal plane, and again at a short distance, so that its image is the same size as itself, the intensity of illumination of the second image will be one-quarter of what it is in the first.

92. Different Systems of Numbering Diaphragms. A certain amount of confusion exists as to the method of expressing the relative apertures of photographic lenses from the fact that there are in existence several systems of numbering them.

The only logical system is to indicate the relative aperture F/n (sometimes, from want of space, the optician engraves only the number n). This system is that recognized by the Royal Photographic Society of Great Britain, by the Société Française de Photographie, and by the International Congresses of Photography of 1900, 1905, and 1910, in agreement with numerous representatives of the optical trade. Moreover, the recommendation has been to adopt the series—

$$F/1,\ F/1{\cdot}4,\ F/2,\ F/2{\cdot}8,\ F/4,\ F/5{\cdot}6,\ F/8,\ F/11{\cdot}3,\ F/16,\ F/23,\ F/32,\ F/45,\ F/64$$

except for the maximum aperture which, if it comes between two terms of the series should preferably be distinguished by a point (so as to make it clear that the usual law of doubling the exposure at each step is not to be applied to that aperture), the relative aperture being also engraved on the mount and included in the description of the lens.

Other systems used (if we except the arbitrary marking of stops by numbers 1, 2, 3, . . . fortunately abandoned by all opticians), indicate each aperture by a number proportional to $1/n^2$, and thus proportional to illumination of the image, or proportional to n^2, i.e. to the time of exposure required with the different stops, other conditions remaining the same.

To the first of these groups belong the two systems of P. Rudolph, adopted on old Zeiss lenses; to the second the Stolze system found on Dallmeyer lenses (before 1902) and some German lenses (Busch, Goerz, etc.), the "U.S." system (Universal System) formerly used in English-speaking countries, but no longer employed except on rectilinears on some American cameras, and finally, the system proposed by the International Congresses of Photography of 1889 and 1891, but condemned by later congresses.

The table given on page 60 shows the equivalent numbers in each of these systems.

Obviously none of these systems can be applied to mounts in which alternative lens combinations can be used (sets of lenses and convertible lenses). This difficulty is generally met by graduating the iris according to its actual diameter. A table is then supplied with the set indicating for each possible combination the relative aperture or the effective diameter corresponding to each actual diameter of the aperture.[1]

[1] When used without a colour filter, single achromatic lenses often work at a much higher speed than their relative aperture would lead one to expect, owing to the very appreciable transmission of ultra-violet which is, on the contrary, absorbed in better corrected lenses because of the greater thickness of glass that the light has to pass through.

[2] A proof which is too complicated to be given, and, better still, experimental trial, will show that with telephotos and non-symmetrical lenses to which the above reasoning does not apply, the same relation holds.

[1] A combination of graduations described in 1902 by Houdry and Durand, giving the relative apertures of all combinations of a set by direct reading, may be mentioned.

93. Measurement of the Effective Aperture of a Diaphragm.[1] When light passes through the diaphragm before meeting any lens, the problem is reduced to measuring the real aperture of the stop. To avoid bending the leaves of the iris by pressing them against the jaws of a sliding caliper or other rigid instrument, it is preferable to insert in the opening, after unscrewing the lens, a piece of card cut in the shape of a V, until it fits when held in a diametral plane. The positions of the iris leaves on the card are marked with a fine pencil, and the section of the V measured across the marks.

In every other case, it is necessary to determine the diameter of the effective aperture for at least one of the apertures, so that the coefficient of effective aperture (§ 71) can be calculated and, consequently, the effective diameters of the other apertures ascertained from a measurement, as above, of their actual diameters.

Having mounted the lens in a camera adjusted for infinity, the focussing screen is replaced by an opaque card pierced by a small hole at its centre (e.g. by means of a red-hot needle). A rule is placed against the lens, and the eye against the hole reads the effective aperture on the rule along a diameter of the lens. If a permanent record is wanted, the camera should be taken to the dark room and a piece of bromide paper inserted in the lens cap and a piece of magnesium ribbon burnt in front of the hole. On development, a black disc is obtained on the paper exactly equal (except for any shrinkage or expansion of the paper) to the effective aperture of the stop used.

[1] The determination of the effective aperture ought always to be accompanied by a verification of the focal length (§ 65 *seq.*). The focal length engraved on many second rate lenses or on those bearing no maker's name is often considerably shorter than the true value, to give the appearance of a greater relative aperture.

	International Congress of Photography, 1900, 1905, 1910	R. Rudolph (Zeiss lenses) Old	R. Rudolph (Zeiss lenses) New	Stolze (Goerz, Busch)	U.S.	International Congress of Photography 1889
F/n		$10000/n^2$	$2500/n^2$	$n^2/10$	$n^2/16$	$n^2/100$
$F/3{\cdot}16$		1000	250	1	–	0·1
$F/4$		625	156	1·6	1	0·16
$F/4{\cdot}5$		495	124	2	–	0·2
$F/5$		400	100	2·5	–	0·25
$F/5{\cdot}64$		315	79	3·2	2	0·32
$F/6{\cdot}3$		250	62	4	–	0·4
$F/7{\cdot}07$		200	50	5	–	0·5
$F/7{\cdot}7$		170	42	6	–	0·6
$F/8$		156	37	6·4	4	0·64
$F/9$		124	31	8·1	–	0·81
$F/10$		100	25	10	–	1
$F/11{\cdot}27$		79	20	12·6	8	1·26

CHAPTER X

CHOICE OF A LENS: TESTING: CARE OF LENSES

94. Preliminary Remarks. The qualities looked for in a lens, at least in certain types, are very different, according as it is required for artistic photography, record work, process work, enlargement, or measurement by photography. The construction of an ideally perfect lens is not compatible with the fixed laws of optics. The optician in every case makes a compromise between numerous irreconcilable conditions which the ideal lens should satisfy. By correcting the various aberrations as best he can, he can make a lens *called* universal, suitable for almost all work, which is therefore usually preferred by the amateur. But by neglecting all corrections not absolutely necessary for a particular kind of work, he can satisfy the necessary conditions more completely and thus produce a specialized lens which would give poor results if used under conditions very different from those for which it was designed.

In pictorial photography, a simplified image is required, to give "firm" drawing without hardness, of breadth proportional to the scale of the image, and to suppress all unnecessary detail, translating only the general form. "When an artist paints from Nature he removes his eyeglasses if he is short-sighted; if he has good sight he half-closes his eyes, otherwise he would not see the tree for the leaves nor the forest for the trees" (C. Puyo). This simplification is best achieved by the use of lenses incompletely corrected for spherical aberration, or, better still, uncorrected for achromatism (*anachromatic* lens). The fact that a very wide angle of view is never used in pictorial work prevents the oblique aberrations (astigmatism, coma, curvature of the field) from being very harmful, the more so as, to obtain a sufficiently uniform image in the different planes, small apertures must be used. Such lenses can, therefore, be made very simply, even from lenses made for other purposes, so long as combinations practically free from distortion are employed, in which spherical aberration is small, if not entirely removed.

Combinations such as these give excellent results in the practice of professional portraiture, but certain requirements, chiefly commercial, such as the necessity of being able to make extremely short exposures under all weather conditions (for child portraiture), or the preference of some clients for a sharp picture which anyone with any artistic culture would condemn, compel the professional photographer to possess at least, as auxiliary instruments lenses of the greatest rapidity compatible with the great focal lengths which are necessary, if the photographer is not to approach too close to his sitter and so distort the image by exaggerated perspective. Some of these very rapid objectives, giving normally a sharp image for a scale of reduction from 1/2 to 1/10, include a lens the separation of which from the other components can be modified by the rotation of a ring, thus introducing into the image certain aberrations to soften the contours (J. Traill Taylor, 1892).

The commercial photographer and the photographer for the illustrated newspapers, who are often unable to choose the most favourable viewpoint (i.e. to get sufficiently far away from the subject) are generally obliged, at least for a great amount of their work, to use lenses having a very large field (called *wide angle* lenses), and giving thus very sharp images without the necessity of stopping down greatly. Press work, and especially sports photography, requires the use of a very large-aperture lens, which is also necessary for colour photography on colour screen plates.

The process worker requires to obtain a plane image of a plane object, free from distortion within the limits of scale usually employed (same size or a little smaller). There is no need, in this case, for a large aperture, but the chromatic corrections need to be very good if three-colour work is to be done; the different component pictures obtained through selective filters should be capable of being exactly superposed and be of equal sharpness.

The requirements of a lens for enlarging are much the same as those for process work, except that the correction should be made for an enlargement of 2 to 15 times linear.

A lens for photo-topography (photography applied to topographic survey work) should embrace a very wide angle and give a perfect image of distant objects (corrections therefore

limited to the focal plane) and, especially, absolute freedom from distortion and curvature of the field. For work executed from terrestrial stations, a small aperture is sufficient, but for aerial photography, where large apertures are requisite, the angle of field is usually smaller, and the correction for achromatism may be a simpler matter, since a yellow filter, which is always necessary in this class of work, may be permanently incorporated with the lens.

95. Lens Names. Before describing some characteristic types of lenses it may be useful to indicate the significance of some of the names by which manufacturers define certain qualities or properties of their instruments.[1]

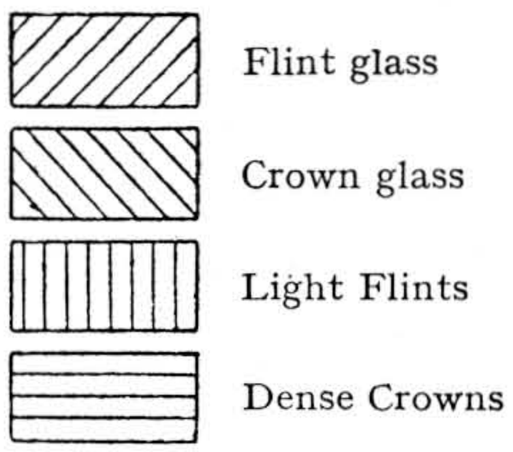

FIG. 64. SHADING REPRESENTING THE DIFFERENT TYPES OF GLASS

From the property of giving a "stigmatic" (§ 48) image, we get (by the addition of prefixes generally derived from the Greek), the names *aristostigmat* (best stigmatic), *holostigmat* (completely stigmatic), *isostigmar* (uniformly stigmatic), *orthostigmat* (stigmatic without distortion), *neostigmar* (a new anastigmat), *planastigmat* (anastigmat with flat field), *velostigmat* (rapid stigmat). Aplanatism of the image (§ 47) is suggested by the appellations *aplanastigmat, aplanat, aplanatic, antiplanat.* A wide angle is suggested by the names *eurygraphe, eurynar, euryplan* (*eurus* = wide), *perigraphe, periplan* (*peri* = around), *eurygonal, hypergon, teragonal* (*gone* = angle, *hyper* = excess, *teras* = extraordinary). Freedom from distortion should be the leading quality of *rectilinear, rectigraph, rectoscope* (*rectum* = straight), *orthor, orthoplastic orthoscopic* (*orthos* = correct), *linear, collinear* (line for line), *homocentric* (same centre of projection), *alethar* (*alethes* = true), *verax.* Flatness of field seems to be suggested by the names *aristoplan, planar,* and analogous names. Universality of use seems claimed for the lenses *polynar, polyplast, polycentric* (*poly* = many), *pantar, pantogonal, pantoscope* (*pan* = all). Lenses having an amplifier for the large scale photography of distant objects (*tele* = far) are designated under the general classification of *telephotos*; in this category are found *telecentric, telinear,* and *bis-telar* (giving an image twice the size of that given by a normal lens with the same camera extension).

Some lenses are named from the number of constituents (or groups of cemented lenses): *octanar, sextar, tetrastigmat, tessar* (*tessares* = four), *trianar, trioplane, triosymmetric, triotar, triplane* (*tri* = three); others take their names from some peculiarity of construction: *unofocal* (the four component lenses have the same focal length), *primoplane* (perfect correction in the "primary plane"). Some names imply the idea of rapidity, e.g. *celor,* others of luminosity, *clarior, glaukar, leukar, lucidor,* and all those named after a star or bright body, *heliar, heliogonal* (*helios* = sun), *phoebus, stellor* (*stella* = star), *orion, syrius, fulmenar* (*fulmen* = lightning); others imply perfection, *artar,* or power, *dynar.* Some names are merely coined from the name of the manufacturer or from the initials, e.g. *dagor* (*d*oppel *a*nastigmat *G*oerz); others bear fancy names the originality of which is often their sole point of interest.

No optician of repute sends out a lens without his name or trade-mark, which is an indispensable guarantee to the buyer of a lens.

96. Brief Description of the Principal Types of Lenses. In the following paragraphs are briefly described some types of lenses, chosen as those which have marked an epoch in the development of photographic optics, with an indication of their essential characteristics, but without claiming to be a complete list, on account of the extremely wide variety of combinations in use and the continual improvements being made. To facilitate comparisons, all the sectional drawings (Figs. 65 to 86), reduced to their essential elements, have been made on a uniform scale corresponding to lenses of 4 in. focal length. The principal types of optical glass are indicated by conventional shading, the key to which is given in Fig. 64. The stop drawn corresponds approximately to the maximum aperture.

97. Single Lenses. The simple non-achromatized lens was used in the camera obscura before the discovery of photography. To obtain a relatively large field, W. H. Wollaston (1812) recommended the use of a convergent meniscus lens (Fig. 65), with stop in front, having an

[1] The facts of this paragraph have been taken from an article under the signature "H.L." in the *British Journal of Photography,* vol. 64, 22nd June, 1917, p. 325.

aperture of $F/11$, and covering a field equal to the focal length (angle 60°). This image, it must be understood, has every possible aberration and chromatic aberration, and in particular requires the adjustment after focussing suggested in the note to § 46. In some fixed focus cameras (§ 87) this is made once for all by the maker. After being abandoned for many years, single lenses have come back into favour as the simplest form of unachromatized lens. Artistic photography calling for a small angle of field, the plano-convex form is to be preferred to the meniscus, the convex surface being turned towards the object, and behind the lens is placed the diaphragm having an aperture which may be as much as $F/8$. This gives a very satisfactory image at the centre of the field (about 15°), with very little spherical aberration, suitable for a bust portrait. Chromatic blur may be minimized (after correction of focus) by using a filter absorbing the ultra-violet and, if need be, a little violet.

The first photographs made by Daguerre were taken with a single lens made by Ch. L. Chevalier (1830), partially corrected for achromatism (Fig. 66), which, with stop $F/14$ (afterwards increased to $F/12$), covered sufficiently well a circle of diameter equal to half the focal length. At a smaller stop, $F/70$, the field was half as large again.

This form of lens was improved and brought to its present form of single achromatic lens only in 1857 by Thomas Grubb. In his lens (Fig. 67) it is seen that the arrangement of Chevalier was reversed, the convergent lens this time facing the object. With an aperture, usually $F/16$, the field reached 60° with complete correction of achromatism and partial correction of spherical aberration for the central rays. By increasing the number of cemented lenses to three (Fig. 68), J. H. Dallmeyer (1865) was able to extend the aperture to $F/11$ and field to 70° (90° at $F/32$) in his "rapid wide angle landscape lens."

98. Petzval Portrait Lens. This lens (Fig. 69), the first to be calculated by a mathematician, was only moderately successful when first brought out (1840). J. Petzval set out, by a proper choice of curvatures and thicknesses, to correct aberrations, and particularly curvature of the field, without the necessity of using a small stop, so as to shorten the very long exposures required in the Daguerreotype process. But this aim could only be accomplished at the expense of angle of field, the diameter of useful field being only about one-third the focal length (angle 20° to 25°), with an effective aperture of $F/3{\cdot}4$ to $F/3{\cdot}6$, subsequently enlarged to $F/2{\cdot}4$ by H. Zincke in 1870.[1] Although this angle of field was quite sufficient for the bust portrait, as experience has since shown, the tendency of the time was towards a very large angle of field, and the photographer would almost have liked the lens to portray objects behind it!

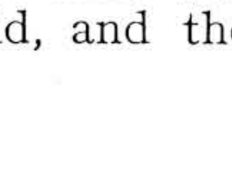

FIG. 65 WOLLASTON'S SINGLE MENISCUS, $F/11$

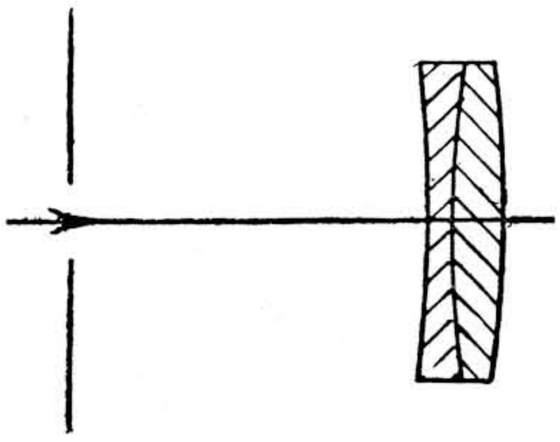

FIG. 66. CHEVALIER'S SINGLE LENS $F/14$

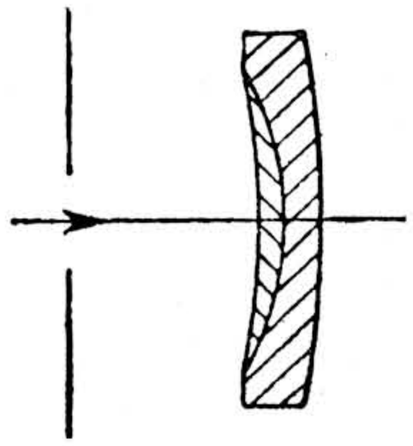

FIG. 67. GRUBB'S SINGLE LENS $F/16$

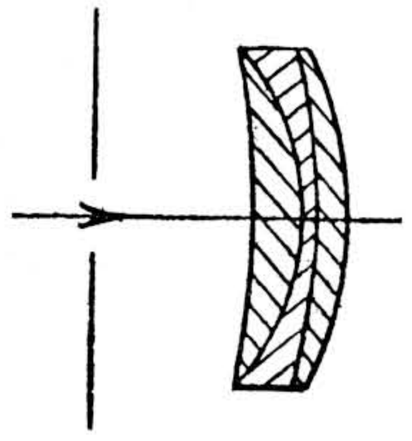

FIG. 68. DALLMEYER'S SINGLE LANDSCAPE LENS, $F/11$

In his first type Petzval had intentionally left in a little chromatic aberration, which subsequent opticians adopting this type corrected in the endeavour to make the image a little more homogeneous.

The Petzval portrait lens, more or less modified, is still in use in a large number of portrait studios. Perhaps it would also be used by amateurs if it had not been for the tradition of mounting it in an extremely cumbrous mount. It is frequently also used for projection work.[2]

[1] It will thus be seen that the useful field of the lens was almost equal to its diameter.

[2] Portrait objectives are still sometimes known by the diameter of their glasses expressed in inches (viz. old French inches of 27 mm.).

At the time of the reaction against the exaggerated correction of lenses for portraiture, lenses of the Petzval type were successfully used (de Pulligny, 1904) with the back combination removed and replaced by a simple convergent meniscus of the same diameter but almost double the focal length. The whole lens can be used at about $F/5$. The chromatic fringe is then about one-third to one-quarter that of an anachromatic lens of the same focal length and relative aperture.

99. Rectilinear Lenses. Apart from some combinations abandoned as soon as tried, photographers had really only the single achromatic lens (more or less corrected but always possessing

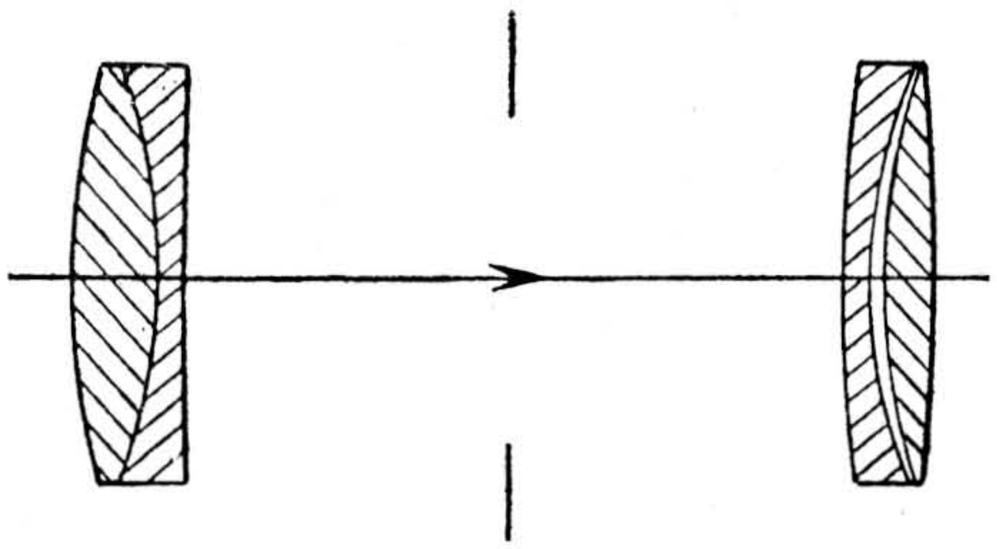

FIG. 69. PETZVAL PORTRAIT LENS, $F/3{\cdot}5$

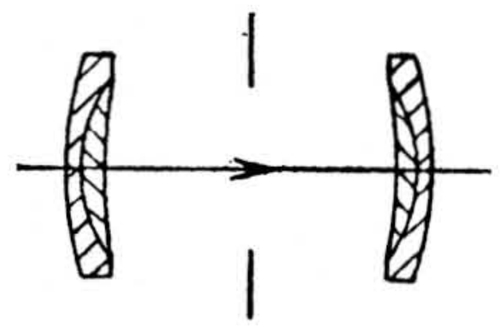

FIG. 70. STEINHEIL'S SYMMETRICAL APLANAT, $F/8$

distortion), and the portrait lens, the field of which was too limited for other uses than portraiture. Need was felt for lenses covering a field comparable with that of the single lenses but perfectly corrected for distortion, which consequently could be used for copying and architectural photography. This correction was sought for in a symmetrical arrangement of the components, following that already used by Wollaston for microscope objectives. In 1866 H. A. Steinheil brought out his symmetrical aplanat (Fig. 70), and soon afterwards the rectilinear of Dallmeyer appeared, almost identical to the smallest detail. However, while this lens was indeed rectilinear, it was only very slightly aplanatic, so that it is the name given it by Dallmeyer that has become general for this class of lenses, which all opticians endeavoured more or less successfully to improve. In its original form it covered a field of 45° at $F/8$, and 60° at $F/30$. Steinheil succeeded in increasing the aperture to $F/7$ and even $F/6$ without much sacrifice of field (40°). These lenses obtained considerable popularity, which has never entirely ceased.

Unfortunately, manufacture of the rectilinear lens has been abandoned by almost all opticians of repute since the appearance of the anastigmat, and the glass polishers who make these lenses nowadays are not burdened with much knowledge of optics, i.e. these lenses still fitted to many cheap cameras are, for the most part, very inferior to what they were formerly, in spite of the high-sounding names such as "simili-anastigmat" which are sometimes given to them. Their "nominal" aperture rarely exceeds $F/8$, and their effective aperture $F/9$.

If the aperture of a rectilinear lens is increased beyond its normal limits, spherical aberration is introduced, and gives the image a softness comparable, to a certain degree, with that given by the introduction of chromatic aberration, so that the lenses are sometimes so used for portraiture. No correction for focus is then necessary.

An important advantage of the rectilinear lens for the possessor of a camera having sufficient bellows extension is the possibility of using the back combination alone, forming a single achromatic lens of double the focal length of the complete lens. The largest aperture, $F/8$, is then actually $F/16$ or a little less. The image is almost twice as large as that obtained with the complete lens, but is only one-quarter as bright. A little distortion may be seen at the edges of the field, which need not prevent its use as a landscape lens. The rectilinear is thus the cheapest and simplest *convertible lens*.

100. Wide-angle Rectilinears. The somewhat large separation between the components of the rectilinear lens restricts the angle of field illuminated, and it is impossible, even by stopping down, to increase the angle to the extent required in many classes of work. In the 'sixties were introduced the Globe lens of Harrison and Schnitzer (1863) and the Pantoscope of Busch (1866), symmetrical combinations

of two achromatic lenses of the form shown in Fig. 65, covering 90° and 95° at maximum apertures of $F/17$ and $F/30$, with considerably less curvature of the field in the latter case. Steinheil subsequently succeeded, by modifying his aplanat but keeping the same principle, in making his wide-angle aplanat (Fig. 71), covering 105° at $F/18$, showing marked superiority over its predecessors, particularly from the point of view of spherical aberration.

Although in principle the wide-angle rectilinears made on this classic construction are convertible, their single components, which have an aperture of only $F/36$, are too slow for this convertibility to be of any practical use.

matter of corrections, as each of the two combinations must be separately corrected for several aberrations. With the glasses available at this period progress was only possible by giving up both symmetry and the separate correction of the individual components, each component, on the contrary, being left with considerable aberration, which compensated that in the other. This fruitful conception was first applied with real success by A. Steinheil (1881) in his group antiplanat (Fig. 73), covering 62° at $F/6{\cdot}2$, the central region being remarkably well corrected for astigmatism. The considerable weight of this lens was a serious drawback to its use on the light cameras which began to

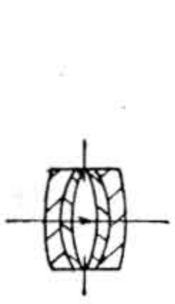

FIG. 71. STEINHEIL'S WIDE ANGLE, $F/18$

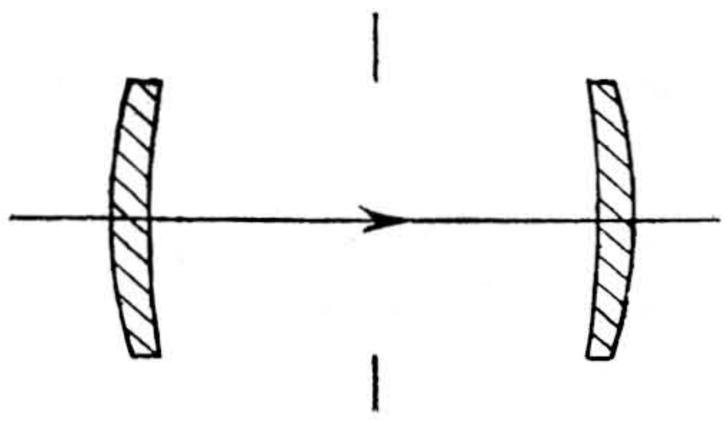

FIG. 72. PUYO AND PULLIGNY'S SYMMETRICAL ANACHROMATIC LENS, $F/6{\cdot}5$

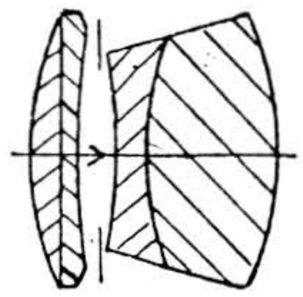

FIG. 73. STEINHEIL'S GROUP ANTIPLANAT, $F/6{\cdot}2$

101. Anachromatic Symmetrical Lens. This lens, the use of which was recommended by Puyo and de Pulligny (1903), is based on the periscope of Steinheil, but, there being no need for a large angle of field, the aperture was increased from $F/40$ to $F/6{\cdot}5$. The symmetrical anachromatic consists of two identical convergent menisci placed one on either side of the stop, with their convex surfaces outwards and separated by at least one-sixth of their common focal length (Fig. 72). The diameter of the glasses being almost one-tenth their focal length, and considerable latitude being allowable in their separation, these can be substituted for the components of a Petzval type of lens, so that mountings made in bulk can be used. When the necessary correction is made for focus,[1] very agreeable portraits can be made, covering a field of about 30°

102. Antiplanats. A symmetrical construction reduces the resources of the optician in the

[1] Instead of making the correction after focussing, the separation may be provisionally increased during focussing operations to bring the yellow focus into the same position as that occupied by the violet focus when the photograph is taken. The amount the separation should be increased is 8 per cent of the focal length of the complete lens. This necessitates the employment of a special mount (with graduated draw tube).

be fashionable with the introduction of the gelatino-bromide plate. Hence this lens and several variants of it made by R. Steinheil merely aroused curiosity, the more so as the approaching appearance of the anastigmat was to furnish a complete and more elegant solution of the problem of the photographic objective.

103. The First Anastigmats. The principles of the correction of astigmatism had been laid down in 1843 by Petzval, but none of the glasses available to opticians at that time allowed these conditions to be satisfied. The appearance of new glasses, heavy crowns, and light flints, enabled P. Rudolph, at the instigation of E. Abbe, to design, after less successful attempts, a type of unsymmetrical, unconvertible doublet, the appearance of which (1890) marks an event in the history of photographic optics, at least as important as the invention of the portrait lens or the aplanat. Each of the components of the different series of lenses made on the same principle (afterwards known as Protars) was formed of two cemented glasses, the dimensions, curvatures, and thicknesses varying as the requirements were for a lens of great rapidity (field of 80° at $F/7{\cdot}2$) or one of very large field (110° at $F/18$). Fig. 74 shows this type of wide-angle lens, which is still made to this day. A

much better correction of astigmatism was obtained in 1893 by adding a glass to the rear component (Fig. 75), this lens covering perfectly, without curvature of field, an angle of 57° at *F*/8 and still satisfactorily 75° when stopped down to *F*/22. In 1901 H. L. Aldis showed that an excellent image could be obtained with a considerably simpler construction (Fig. 76), covering a field of 51° at *F*/6 and 90° at *F*/32.

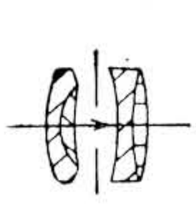

FIG. 74. RUDOLPH'S WIDE-ANGLE PROTAR, *F*/18

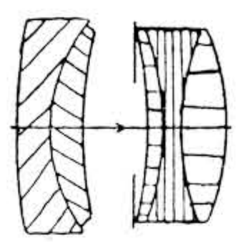

FIG. 75. RUDOLPH'S PROTAR, *F*/8

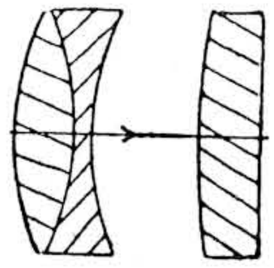

FIG. 76. ALDIS ANASTIGMAT, *F*/6

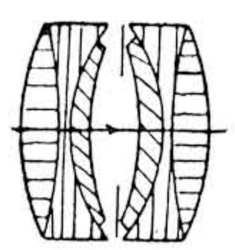

FIG. 77. VON HOEGH'S DAGOR, *F*/6·8

SECTIONS OF THE PRINCIPAL TYPES OF PHOTOGRAPHIC LENSES

The dimensions correspond approximately to lenses of 4″ focal length

104. Convertible Anastigmats of Two Combinations of Cemented Glasses. The excellent results obtained by Rudolph incited a great number of opticians to use the new combinations of glasses, but they sought for a solution of the problem in another direction—returning to the convertible symmetrical lens. The German factories being almost the only ones at this period to possess research departments, the first (1893) of the new category to appear was the double-anastigmat calculated by E. von Hoegh (Fig. 77), covering a field of 72° at *F*/8 (afterwards increased to *F*/7·7 and then to *F*/6·8), and almost 90° at *F*/22, forming an excellent universal lens. A number of variants followed, from process lenses covering about 100° at *F*/11 to the French eurygraphe lens, in which the aperture was enlarged to *F*/5 with the same field of 90°. The number of glasses cemented together in the components was subsequently increased to four, and even five.

The single components of such a lens, when used behind the diaphragm, form excellent single anastigmats, perfectly corrected for chromatic and spherical aberrations, but not for coma, and showing, at least at the edges of the field, a little distortion and curvature, but very suitable for landscape work. The focal length is usually about 1·8 times that of the complete lens, and the camera extension is rather more than doubled. The maximum effective aperture is then equal to the actual diameter of the largest stop, and the relative aperture about 40 per cent (mean value) less than that of the complete lens.

Meanwhile (1895) Rudolph, after having tried and rejected this arrangement, worked out a single anastigmat of four cemented glasses, which could be used either separately (field about 50° at a maximum aperture of *F*/12·5) or in pairs, forming either a symmetrical lens at *F*/6·3 or an unsymmetrical lens (Fig. 78), at an aperture from *F*/7 to *F*/7·7 (according to the degree of dissymmetry) covering about 45° at full aperture and 80° at *F*/25. This arrangement has since been adopted by the greater number of opticians, some of whom have pushed the aperture to *F*/5 and that of the single components to

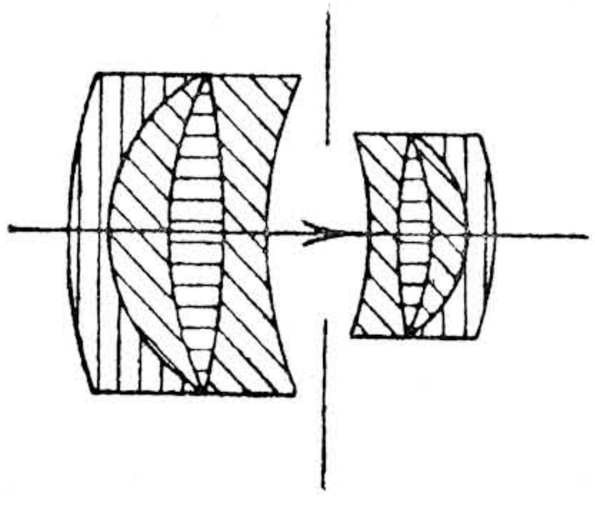

FIG. 78. RUDOLPH'S DOUBLE PROTAR, *F*/7·7

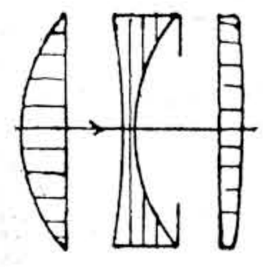

FIG. 79. TAYLOR'S COOKE LENS, *F*/6·5

F/9. These convertible unsymmetrical anastigmats form the simplest "sets of lenses" or "casket lenses," giving the photographer a range of three focal lengths in steps, generally in the ratio of 1 : 1·6 : 2 (or 1 : 1·5 : 2·2), the focal length of the complete lens being taken as 1. Care should be taken always to place the single lens, when used by itself, behind the diaphragm, and, when re-assembling the complete lens, to place the shorter focus component behind, the longer component being placed in front.

105. Unconvertible Anastigmats consisting of Uncemented Lenses. A completely different conception of the anastigmat led H. D. Taylor (1893) to design numerous types of specialized

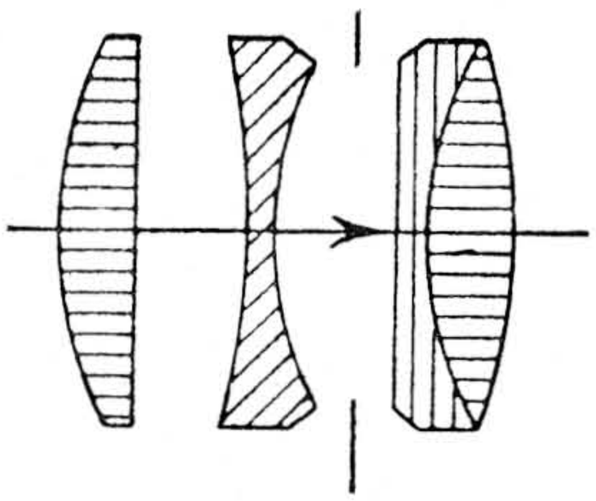

FIG. 80. RUDOLPH AND WANDERSLEB'S TESSAR, *F*/3·5

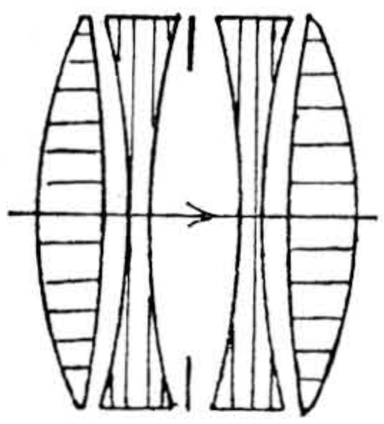

FIG. 81. ZSCHOKKE'S CELOR, *F*/4·5

FIG. 82. VON HOEGH'S HYPERGON, *F*/22

lenses, all consisting of a system of three separated lenses, among which the model shown in Fig. 79 is particularly designed for hand cameras, covering 70° at a maximum aperture of *F*/6·5. Among other forms by the same designer may be noted a portrait lens at *F*/3·5, covering about 40°, a wide-angle covering 97° at *F*/6·5, and a process lens at *F*/8 (*F*/11 and *F*/16 for the very great focal lengths) covering 55° at full aperture and about 80° at *F*/32.

The advantages of this relatively economical construction, leaving the optician the greatest number of variable factors with the minimum number of lenses, led to the appearance of a number of variants, in most of which, however, one of the single lenses was replaced by a system of two cemented lenses. Such is the case, for example, with the lens designed by Rudolph and E. Wandersleb (1902), of which there are several series. That shown in Fig. 80, intended especially for portraiture, covers a field of about 35° at *F*/3·5. Others at *F*/4·5 and *F*/6·3 cover respectively 55° and 65° at full aperture, and 70° with a small stop (about *F*/36).

106. Symmetrical Anastigmats of Separated Lenses. With a view to simplifying the construction of symmetrical convertible anastigmats, many opticians have sought to take advantage of the freedom given by combinations of separated lenses. One of the first of this type appears to be that calculated by von Hoegh (1898). Originally the maximum aperture was only about *F*/10 for the complete system, but it was extended by Zschokke successively to *F*/7·6 (1903), and then to *F*/5·5 and *F*/4·5, according to the focal length (Fig. 81), the field being about 60° at the maximum aperture and 65° at a very small aperture.

The presence of eight glass-air reflecting surfaces has some drawbacks (§§ 56 and 57). The maker of the above type therefore recommends that the lens should preferably be used at full aperture, "because with small stops harmful reflected images may sometimes be formed."

Each of the halves of such a lens can be used separately behind the diaphragm, when the maximum aperture will be *F*/10 to *F*/11.

107. The Hypergon Wide-angle Lens. Although such a lens has only a very restricted use, we ought to mention, if only as a curiosity, the wide-angle lens (Fig. 82), calculated by von Hoegh in 1900 to cover a flat anastigmat field of 140°, almost four-tenths of the complete horizon, at an aperture of *F*/22 (actually the full aperture is used only for focussing, and a smaller aperture used when the photograph is taken). The correction for astigmatism is only obtained by the use of extremely thin lenses; spherical and chromatic aberrations are not corrected, but the relative aperture is so small, and thus the depth of focus is so large, that these aberrations do not affect the image in practice, and no correction for focus is necessary. When the field used exceeds 110° the difference of illumination between the centre and the edge is so great that it is necessary to use a star-shaped diaphragm (§ 54) to reduce the

illumination at the centre for a considerable proportion of the exposure.

The large angle between the extreme secondary axes, and the fact that the focal length is scarcely one-fifth the diagonal of the plate covered, means that the lens can only be used on a specially-made camera; also it is generally impossible to use a shutter with it.

108. Lenses of Variable Foci. To the variable power telephotos may be connected the variable focus lenses used in cinematography to obtain a progressive variation in the scale of a given scene. These lenses usually comprise three systems, moved by cams in such a manner that the variation in focal length does not affect the sharpness of the image of distant objects, the focussing on near objects being then obtained by means of supplementary lenses (§ 118). For instance, in the Vario lens (A. Warmisham, 1932) the focus varies from 40 mm. (aperture F/3·5) to 120 mm. (aperture F/6). Provided the variation in focal length is restricted, the iris diaphragm can be automatically regulated, so as to keep the relative aperture constant and to keep the image at a constant luminosity.

To facilitate focussing on small and medium size cameras, several opticians have made lenses formed of two systems of which the separation is variable by means of a helical mount graduated in subject distances. The amount of displacement of the front system can then be much smaller than the movement it would be necessary to give the lens as a whole.

109. Variable-power Telephotos. A divergent lens had several times been used for enlarging the image given by an astronomical objective (L. Porro, 1851; Warren de la Rue, 1860), or by a microscope (Foucault and Donné, 1845; Borie and de Tournemine, 1869) when, in 1873, J. Traill Taylor pointed out the importance to photographers of obtaining large pictures of distant objects directly in the camera, by using an objective constructed on the principle of the Galilean telescope (opera glasses) but increasing the separation between the lenses and correcting them specially for this purpose. Such a system, in fact, constitutes an objective the focal length of which can be varied at will between very wide limits by altering the separation between the elements. Such a system has the very considerable advantage that the nodal points are thrown forward a great distance in front of the lens, so that the distance between the lens and the image is only a small fraction of the focal length, thus rendering unnecessary the use of the cumbrous cameras required for normal lenses of great focal length. It was only in 1891 that this suggestion was exploited by T. R. Dallmeyer, followed closely by A. Miethe and Steinheil, and then by many other opticians.

Consider (Fig. 83) a system formed of a convergent lens L_1 of focal length f_1 and a divergent

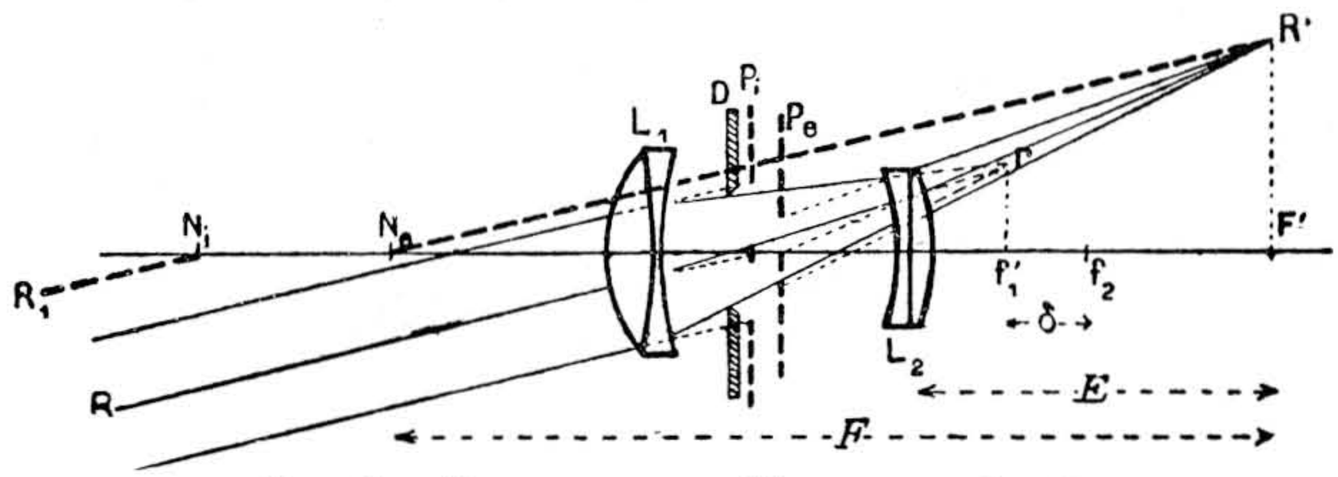

FIG. 83. OPTICS OF THE TELEPHOTO LENS

lens L_2 of focal length f_2, so placed that the back focus f'_1 of the convergent lens falls between it and its (virtual) front focus f_2. The image of a distant point in the direction R will be formed, in the absence of the divergent lens, at a point r in the focal plane of the front component. This point acting as virtual object to the divergent lens and closer to it than its focus, its image R' is real, and magnified in the ratio $F'R'/f_1'r'$.

The application of the formulae already quoted in § 70, bearing in mind that the focal length of the divergent lens must have the "minus" sign, gives for the resultant focal length

$$F = \frac{f_1 f_2}{f_1 + f_2 - e} = \frac{f_1 f_2}{\delta}$$

calling e the separation of the components, δ the optical interval, the distance between the foci f_1' f_2. The formula shows that when δ tends to zero the focal length becomes infinitely great (adjustment of the Galilean telescope for normal sight). Conversely, if the lens L_2 approaches the focal plane of L_1 there can be no possibility of photographing the image. The

optical interval δ can thus take all values between 0 and $(f_1 - f_2)$, the difference between the two focal lengths.

If the image given by the complete system is magnified m times (ratio of lengths) relatively to that which the convergent system alone would have given, the distance E of the divergent lens from the magnified image is

$$E = f_2(m - 1)$$

If, in the case of a telephoto, where $f_1/f_2 = s$, the distances O and I of the object and image respectively from the telephoto and the distances o and i for an ordinary lens of the same focal length giving an image of the same size, are calculated, it is found that

$$O = o + [F(s - 1) + f_1]$$
$$I = i - [F(1 - 1/s) + f_2]$$

The ratio s being always greater than (or at least equal to) unity, it is seen that, for a photograph on the same scale, the distance of the object from the telephoto is always greater than it would be with an ordinary lens of the same focal length, and the more so the smaller the focal length of the amplifying negative lens compared with that of the convergent system. Conversely, the distance from the image to the telephoto is always less than it would be with a lens of the usual construction.

The first telephoto lenses used any ordinary photographic lens as the convergent system, and as amplifier a more or less complex divergent system. The two components were mounted so that the separation could be altered by a rack and pinion, the optical interval δ of the above formulae being marked on a scale on the outer tube; also, usually, the resulting magnification and the corresponding distance of the image.

The first simplification took place in 1896 by the construction of a complete system shown in Fig. 84, the divergent system being shown in full lines in the position for a focal length of 4 in., whilst in the position shown by the dotted lines the focal length is about 12 in.

In one or other of these forms the telephoto requires careful handling on account of the very faint image, making focussing difficult when large magnifications are attempted. The use of an optical system with variable separation requires in fact that each of the components should be separately corrected, which is only possible with small apertures. This type of lens must thus be considered as suitable only for special purposes. There is no doubt, however, that it can render very appreciable service. The use, in place of it, of enlargement of part of a negative taken with an ordinary lens is not to be thought of, for at the same time the granular structure of the image is enlarged, which limits the degree of enlargement to not more than ten times as a rule.[1]

110. Fixed-focus Telephotos. Very great improvement, at least in the construction of telephoto lenses for general use, was made when K. Martin (1905) abandoned the variable magnification and made a lens which, in view of its employment on hand cameras, would be more correctly described as a long-focus lens for short-extension cameras. The possibility of compensating the aberrations of each of the components by aberrations of opposite sign in the other, and the removal of the difficulty of centring which arises when two sliding tubes are employed (which must necessarily have a little play) enabled him to obtain an aperture of $F/9$ covering about 35° and giving an image of a quality comparable with that of a good rectilinear. The lens had the advantage that

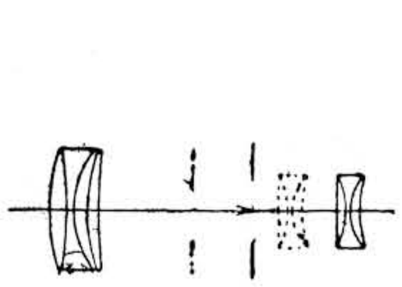

FIG. 84. VARIABLE POWER TELEPHOTO

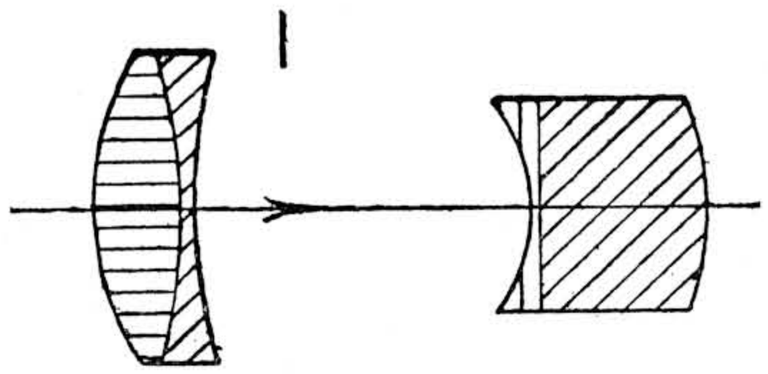

FIG. 85. FIXED-FOCUS TELEPHOTO, $F/4{\cdot}8$ (LEE)

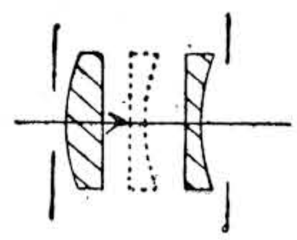

FIG. 86. PUYO AND DE PULLIGNY'S ANACHROMATIC TELEPHOTO

[1] It may be mentioned that convergent lenses have also been used as magnifiers, the arrangement being then similar to an astronomical telescope with increased separation between the components so as to obtain a real image. Also afocal magnifiers have been used such as a Galilean or terrestrial telescope (e.g. a field glass) adjusted for normal sight and placed in front of the lens, which thus takes the place of the eye of an observer. The magnification is then equal to the ratio of the focal lengths of the two components of the amplifier. The *Adons* of Dallmeyer (1899) are afocal magnifiers constructed on this principle.

for a focal length of $9\frac{1}{2}$ in. (covering almost the whole of a $4\frac{3}{4} \times 3\frac{1}{2}$ in. plate), the distance from the vertex of the back lens to the plate (practically the same as the distance from the camera front to the plate) was only $5\frac{1}{2}$ in., that is, only 58 per cent of the focal length. The aperture of these lenses was extended afterwards to $F/7$ or $F/7{\cdot}7$ (by the same designer), with a slightly smaller field, the focal length for the $4\frac{3}{4} \times 3\frac{1}{2}$ in. plate being increased to $10\frac{1}{2}$ in., without increase of camera extension.

This very important reaction against the use, on amateur cameras, of lenses of small focal length which, though useful for record work, are opposed to all aesthetic rules, has been supported by the greater number of English and German opticians, who have all kept to the same ratio, which is a very suitable one, between the focal length and the camera "extension," while striving to increase the aperture and the quality of the image. In England, where this type of lens seems to have reached very great perfection, the aperture has been increased, first to $F/6{\cdot}8$ and then to $F/3{\cdot}5$, with a field of almost 35°. Fig. 85 shows a lens of $F/4{\cdot}8$ aperture by H. W. Lee (1922). These different lenses have been made up to now only for use on hand cameras of size not exceeding 7×5 in. The most recent types give an image comparable with that given by the best modern lenses of normal construction.[1]

111. Anachromatic Telephotos. The use of a telephoto lens of low but variable magnification is of importance to the landscape photographer, who, having chosen his viewpoint, must make his image cover his plate. On the other hand, the distribution of sharpness between the successive planes, without exaggerated softness in the distance, leads him to the use of a smaller relative aperture as the focal length is increased. In fact, it may be said (C. Puyo) that the absolute diameter of the greatest effective aperture of service in artistic landscape work should be in the neighbourhood of 0·8 in. For 18 × 24 cm. ($9\frac{1}{2} \times 7$ in.) plates, the focal lengths mostly used lie between 16 in. and 25 in. The anachromatic telephoto for which C. Puyo and L. de Pulligny gave data in 1906, which they called *adjustable landscape* (Fig. 86), is very suitable for this purpose. It is constructed of two lenses of 0·8 to 1·2 in. diameter, one convergent and the other divergent, of the same focal length, e.g. about 4 in. for $9\frac{1}{2} \times 7$ in. plates, or 3 in. for 7×5 in. plates. These are mounted so that the separation can be varied without exceeding a quarter of their common focal length. A diaphragm of 0·8 in. aperture (a little less for lenses of very short focal length) is placed in front of the convergent lens, and a variable diaphragm can usefully be placed behind the negative amplifying lens for varying the degree of softness. Such a combination, used over a small field, can be sufficiently corrected for astigmatism, and have an almost flat field without too much spherical aberration.

The telephoto is of importance not solely for record and pictorial landscape photography, but is also extremely useful for portraiture, giving large heads with the camera placed at a very great distance from the sitter, thus avoiding the distortion, amounting almost to caricature, which results from too close a viewpoint.

For the professional having at his disposal a triple-body camera, the telephoto lens of variable separation can be very simply rigged up without special mounting. The convergent system (which may be a Petzval or other type of portrait lens, or anachromatic symmetrical lens, according as a semi- or completely anachromatic lens is desired; the first-named gives a better defined image, more agreeable to the taste of the average customer) is mounted on the front body; the divergent lens will be attached to the middle body, so that its centre is on the optical axis of the convergent lens. In this case a plano-concave lens should be chosen, placed with its concave surface towards the front lens, the focal length of which should be almost half that of the convergent system and the diameter about one-third its own focal length. With a portrait lens of 18 in. focal length at 33 to 50 ft. from the sitter, portraits of $9\frac{1}{2} \times 7\frac{1}{2}$ in. size are obtained of very agreeable perspective, where the arrangement of the hands is easy and good "drawing" is possible (C. Puyo).

112. Sets of Lenses. We have already seen that convertible unsymmetrical lenses give the photographer three different foci, according as the complete lens or one of the components is used. By substituting for one or the other of these components other analogous combinations which can also be used separately, the number of foci available is increased, and thus a set or casket of lenses is formed. The total number of different focal lengths which can be got with a

[1] Lenses of this type, but reversed, have been used in cameras for simultaneous three-colour selection, the increase in camera extension then providing the necessary space for the system of reflectors (beam splitters) used to divide the beams of light among the three images.

given number of components is shown in the following table—

Number of component lenses .	2	3	4	5
Number of different focal lengths obtainable . .	3	6	10	15

It should, however, be pointed out that not all the possible combinations are, optically speaking, useful or possible. In fact, sets are generally limited to three or four components, and then rarely give more than five to eight combinations.

Lens sets are used chiefly by commercial photographers, who are often called upon to take a great variety of subjects out of doors under conditions which are often difficult as regards choice of viewpoint. It is rare for all the combinations to give images of a quality equal to that given by a specially designed lens. The combination of two lenses of very different focal lengths in relative positions which are not all equally favourable in fact hardly allows complete elimination of distortion, at least at the extreme limits of the field.

113. Different Types of Lens Mounts. Several types of mounts are employed for photographic lenses, according to the use to which they are to be put.

For cameras which are always used with a tripod (studio and field cameras), where there is no limit to the projection of the mount, a *normal mount* (Fig. 87), the simplest type of all, is usually fitted, the flange being attached[1] to the rear of the lens mount, giving free access to the diaphragm. On hand cameras, where bulk has to be reduced, a *sunk mount* is often preferable, the flange being on the front part of the mount, which is thus sunk inside the camera in order to make use of the space corresponding to the thickness of the bellows (when closed). The diaphragm is then operated from the front by a cylindrical lining between the exterior mount and the actual body of the lens.

When the camera is not fitted with any adjustment for focus a *helicoidal focussing mount* is employed, with the flange in front and comprising, beside the tube actuating the iris, three concentric tubes. Two studs fixed on opposite sides of the inner tube engage in helical slots in the intermediate tube and in slots in the outer tube parallel to the axis. A rotation of the intermediate tube by means of a lever working over a scale of distances causes the lens to move forward or backward without rotation.[1]

Finally, for use with between-lens shutters (§ 138), the mount is reduced to a pair of cells[2] in which the lenses are bezelled or held in with clamp rings, these cells being screwed into the female screws provided at either end of the

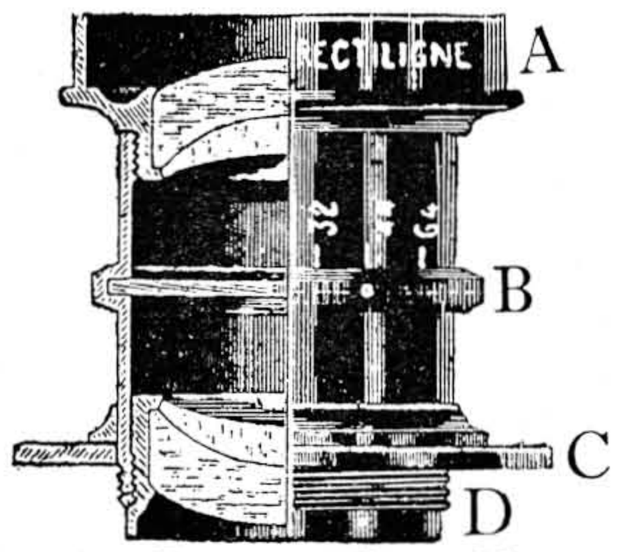

FIG. 87. PARTS OF LENS MOUNT
A = Hood. *B* = Iris diaphragm ring *C* = Flange *D* = Thread

shutter. It cannot be too strongly recommended that the mounting of a lens on a between-lens shutter should be entrusted to the maker of the lens, so that there should be no alteration in the separation of the elements of the lens to spoil its qualities.

The mounts of old lenses always had a *hood* of very great projection, either integral with the front cell or detachable. The disuse of this very useful accessory, at first on lenses for folding hand cameras, has unfortunately become general; hence it is almost always necessary to use an auxiliary hood with modern lenses (§ 124).

Attachment of the lens to the flange is by means of a flange thread,[3] which, except on

[1] In every case where vibration is likely to occur (e.g. in aerial photography) it is necessary to provide additional security to prevent the lens from unscrewing, partially or totally, when in use.

[1] In the early days of photography cameras had only a clumsy focussing adjustment or none at all. Focussing lens-mounts were then formed of two tubes, the exterior one fixed to the flange, the inner sliding in it by means of a rack and pinion. Although it is no longer needed this mount is still retained for Petzval-type portrait lenses.

[2] Opticians generally engrave their trade-mark, serial number, and lens characteristics on the front only. The back cells of lenses of the same series and mean focal length are not usually optically interchangeable, but as they are mechanically interchangeable it would be very desirable to avoid confusion by engraving on the back cell at least the number of the lens. The female screws of the cells can be used for inserting filters, supplementary lenses, etc.

[3] To avoid spoiling the threads by crossing, the lens should be first rotated in the direction of unscrewing when applied to the flange, till a slight click is heard, indicating that the ends of the threads are correctly placed for screwing. On English lenses with coarse threads the thread is made to start abruptly, and exterior marks placed to indicate the correct position for engagement; three turns then screw the lens home in the flange.

some English lenses, is generally much too fine, it being often difficult to screw the lens on correctly. It has been proposed, but not generally adopted, that lenses should have a bayonet attachment or interrupted threads like those on the breech of a gun, one-sixth of a turn then sufficing to screw the lens home. Mention may also be made of universal iris adapters with metal blades actuated like those of an iris diaphragm to bear on the exterior screw threads of the mount. They are attached to the camera by screwing into the flange.

The blades of these adapters are generally too flexible, so there is some uncertainty as to the direction of the optical axis.[1]

The materials used for lens mounts are generally brass, or the light aluminium alloys; pure aluminium, which was used for some time, had the drawback that the threads rapidly wore out.[2] In every case where the lens may be used for the copying of originals under glass, it is desirable that the mount should be finished in matt black lacquer in preference to the traditional gold lacquer used on optical instruments, so as to minimize reflection.

A necessary accessory is the cap, which is sometimes of metal, more often of leather. The lens being considered to remain on the camera, only the front lens is then exposed to shocks, and only one cap is usually provided. When several lenses are carried with one camera, it is well to fit a cap on the back cell as well[3].

114. Choice of a Lens. The descriptions previously given (§§ 94–111) form sufficient guide to the choice of a lens required for a special purpose, so that we shall now consider only the case of the modest amateur desiring to attempt the most varied work with the greatest possibility of success, with only one lens.

The single lens is usually only found on small cameras for beginners. In very good light, moving objects may be photographed, but the small aperture (maximum aperture $F/16$) obviously will not allow of instantaneous photography in poor light. With a sufficiently long exposure, however, landscapes can be taken which are hardly distinguishable from those taken with more costly objectives.

It is particularly between a rectilinear and an anastigmat that the choice usually lies. Let it be stated at once that *at equal relative apertures*, and if extremely sharp definition at the edges of the field is not sought for, the images given by these two types of lenses differ only slightly, especially if the focal length of the rectilinear is a little greater than that of the anastigmat.

From the point of view of amateur photography the principal difference between these two types lies in their respective speeds. Whilst $F/8$ can be considered the maximum aperture for the rectilinear, there are few modern anastigmats in which the aperture is not at least $F/7$, and many have apertures larger than $F/2{\cdot}5$, so that calling the " speed " of the rectilinear 1, that of the anastigmat lies between 1·3 and 10.

Instantaneous exposures (a conventional term for exposures not longer than one-tenth of a second) will thus be possible with the anastigmat, especially with large-aperture lenses, in cases where, other circumstances being the same, they would be impossible with the rectilinear. In other words, the principal advantage of the anastigmat, thanks to its greater speed, is to extend the times (of day) during which it is possible to photograph moving objects.

Regard must, however, be paid to the fact that the employment of larger apertures reduces the depth of field, the estimation of the distance on which to focus becoming much more difficult in proportion as the aperture is increased. Hence it may be considered that apertures in the neighbourhood of $F/3{\cdot}5$ will be only rarely used in outdoor photography unless it is proposed to specialize in the photography of objects in very rapid movement requiring exposures of the order of 1/1,000th second, or in colour photography.

The property of the anastigmat of covering a larger field so that a shorter focus lens can be used for the same plate, thus reducing the size of the camera, is generally considered an advantage. Although this is so for some kinds

[1] When it is desired to substitute one lens for another quickly, the smaller ones may be fitted with adapters having male and female threads, all screwing into the largest flange and each receiving one of the lenses. The adapters should be kept on their respective lenses to avoid confusion.

There may also be mentioned, if only as a warning against their use, the ball and socket flanges which have been proposed from time to time for the purpose of inclining the optical axis of the lens to its normal direction.

[2] When a lens of great focal length is likely to undergo large changes of temperature (aerial photography at high altitudes) it is well to restrict the expansion and contraction of the mount by using the *invar* steels, or to adopt a compensating device like those frequently used on clock pendulums.

[3] The lenses on cameras exposed in dealers' shop windows might very well be provided with glass-fronted caps which would keep out the dust but leave the optician's name visible.

of photography, it is difficult to avoid regarding it as a drawback from the point of view of pictorial photography, the smaller scale of the image tempting the photographer to approach too near to his subject.

If the camera allows sufficient extension, the employment of the single components of a convertible anastigmat is to be preferred, the complete lens being then used for subjects with movement, and either of the components for landscape photography.

The anastigmat being able to do, and do better, everything that the rectilinear can, and, moreover, allowing the photographer to work under conditions that he could not work under satisfactorily with the rectilinear, it is evident that if monetary considerations do not enter into the case, an anastigmat should be chosen.

If, on the contrary, the amateur must restrict his expenses, it would be better for him to adopt a good rectilinear rather than a bad imitation of an anastigmat, of intermediate price. He will lose some opportunities for photography (compared with the possessor of an anastigmat) with the short exposures required for rapidly-moving objects, or for using a camera in the hand, but, under all other conditions, he will be able to obtain photographs of interest and of artistic qualities equal to those obtained with a more expensive lens. The interest of a pictorial work is not measured by the cost of the box of colours used by the artist. From the purely artistic point of view, it can be repeated that the finest photographs have been obtained with simple uncorrected lenses or anachromatic lenses.

115. Choice of Focal Length. The necessity that often arises for decentring the lens (§ 315) relatively to the plate so as to raise or lower the horizon, especially for the photography of high buildings, while keeping the optical axis of the lens horizontal, requires the choice of a lens such that the diameter of the field covered sharply should considerably exceed the diagonal of the rectangle defining the image, at least when stopped down.

If we consider, for example, a plate $4\frac{3}{4} \times 3\frac{1}{2}$ in. (Fig. 88), of which the diagonal is 6 in., a field of 6 in. diameter would cover it[1] if the lens were always centred on the plate, i.e. if its optical axis always met the plate in the point O, the intersection of the diagonals of the rectangle $ABCD$. But if the lens is to be decentred 1·2 in. parallel to the long sides, so that it comes opposite O', the lens considered above would no longer cover the shaded area $AabB$, and in order then to cover the plate, the field covered sharply should be equal to the circle with O' as centre and radius $O'A$, i.e. a diameter of 8 in.,

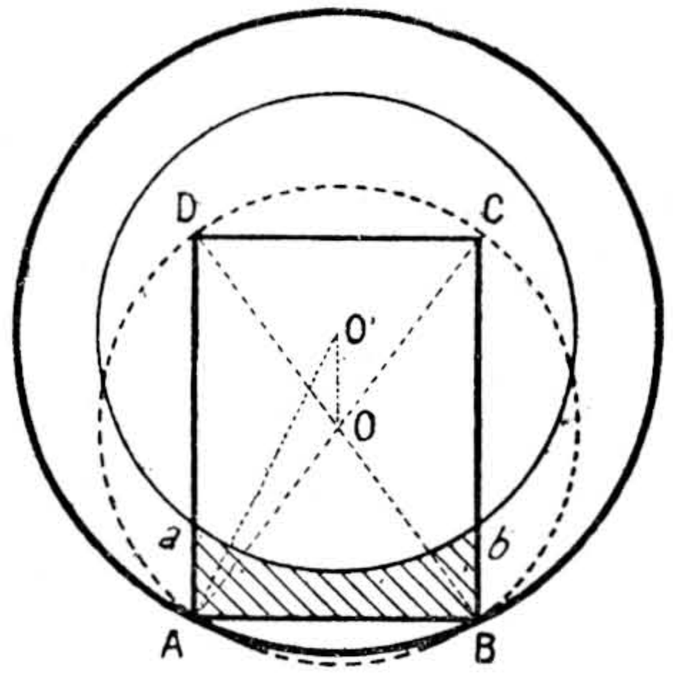

FIG. 88. PLATE SIZE IN RELATION TO LENS FIELD

which would cover a plate $6\frac{3}{4} \times 4\frac{3}{4}$ in. in the absence of decentring.

Lenses being generally characterized by the angle of field sharply covered (angle between the secondary axes to the two extremities of the diameter of the circle of the sharp image, or to the two extremities of the diagonals of the rectangle which can be inscribed in this circle), the two tables given on the next page indicate, in the first, the factor by which the focal length should be multiplied to obtain the diameter of the sharp image when the angle of field is known[1]; and in the second, the lengths of the diagonals corresponding to the different plate sizes.[2]

The eye includes an angle of only 50°, so it is recommended (if the photograph is to be viewed from its normal viewpoint) that the *use*[3]

[1] A margin of a few millimetres (about one-eighth of an inch), corresponding to the rebate on the dark slide to hold the plate, should, to be exact, be deducted from the normal plate size.

[1] This factor is twice the tangent of the half angle of field.

[2] In this second table the sizes common on the European continent are indicated by heavy type; those in use in England and America by *italics*, with the sizes in inches in brackets.

This table does not include the stereoscopic plate sizes corresponding to the size of two single pictures, but the 6 × 13 cm. size has been included, as certain "panoramic" cameras are made which use the full size for a single picture.

[3] There is obviously no disadvantage in employing a lens covering a larger angle of view, if only a part of this angle is used in the photograph, but in this case care must be taken that light reflected from the sides of the camera does not fog the image. The detachable hood is here called for.

DIAMETER OF THE SHARP IMAGE (THE FOCAL LENGTH BEING TAKEN AS UNITY)

Angle of field	Diameter of image	Angle of field	Diameter of image	Angle of field	Diameter of image
10°	0·17	55°	1·04	100°	2·38
15°	0·26	60°	1·15	105°	2·61
20°	0·35	65°	1·27	110°	2·86
25°	0·44	70°	1·40	115°	3·14
30°	0·54	75°	1·54	120°	3·46
35°	0·63	80°	1·68	125°	3·84
40°	0·73	85°	1·84	130°	4·28
45°	0·83	90°	2·00	135°	4·84
50°	0·93	95°	2·18	140°	5·50

IMAGE SIZES (NOMINAL) AND THEIR DIAGONALS

Dimensions	Diagonal in inches	Dimensions	Diagonal in inches	Dimensions	Diagonal in inches
1·8 × 2·4 cm.	1·18	*8·2 × 10·8* (4¼ × 3¼)	5·28	*16·5 × 21·5* (8½ × 6½)	10·69
2·4 × 3·6	1·78	6 × 13	5·63	18 × 24	11·82
3 × 4	1·97	**9 × 12**	5·91	*20·3 × 25·4* (10″ × 8″)	12·81
4 × 4	2·24	*10·1 × 12·7* (5″ × 4″)	6·38	21 × 27	13·48
4 × 5	2·52	9 × 14	6·54	24 × 30	15·13
4·5 × 6	2·96	10 × 15	7·09	*25·4 × 30·4* (12″ × 10″)	15·60
6 × 6	3·35	11 × 15	7·33	27 × 33	16·78
6 × 7	3·78	*12 × 16·5* (6½ × 4¾)	8·04	*30·4 × 38·1* (15″ × 12″)	19·19
6·4 × 8·9 (3½ × 2½)	4·33	*12·7 × 17·8* (7″ × 5″)	8·59	30 × 40	19·70
6·5 × 9	4·37	**13 × 18**	8·75	40 × 50	25·22
8 × 9	4·73	15 × 21	10·17	50 × 60	30·77

of a larger angle of view should be avoided, except for record work, where a wide angle can be used. This amounts to saying that the focal length, at least in landscape photography, ought to be at least equal to the diagonal of the plate. In fact, the bad habit has been established, either for economical reasons or by an innate tendency to include in a photograph as much as possible, even if a great part has afterwards to be sacrificed in the print to unify the composition, of choosing almost invariably a lens of the shortest focal length in the optician's catalogue which will cover the plate. This is the more often done as some catalogues purposely print the expression "recommended for such-and-such a size," instead of the more desirable "able to cover, at the maximum, such-and-such a size." It is thus that many cameras are fitted with lenses of which the focal length is scarcely greater than the longer side of the plate, except in the case of large-aperture lenses, which always have a smaller angle of field.

Particular considerations limit the choice of focal length of studio portrait lenses. On the one hand it is very desirable, in order to avoid foreshortening and exaggeration of near parts, to place the camera at least 12 ft. away from the sitter for a head and shoulders or half-length portrait, and at least 20 ft. for full-lengths or groups. On the other hand, it is obviously necessary to take into account the dimensions of the studio and the distance available between sitter and camera, since the sitter cannot be placed against the wall and the operator must have room behind the camera for focussing and manipulating the dark slides, both of which considerations take away at least 6 ft. from the actual length of the studio. Finally, in industrial towns, where dust is plentiful in the air, the light diffused by the dust (when the space between the camera and sitter is illuminated) will produce a slight fog over the image if the distance between sitter and camera exceeds about 40 ft.

Allowing a mean height of 5 ft. 5 in. for an adult, and that the head is about one-seventh

the height, i.e. 9–9½ in., which may be increased by the hair or beard, it is easy to find, by using the rules formulated in § 62, the distance the sitter must be away from the lens in order to obtain an image of any desired size, or, inversely, to determine what is the greatest focal length which, in the space available, will allow of a given degree of reduction. For a *carte de visite* (head about 0·8 in., or full length about 2¾ in. on 3¾ × 2½ in. paper), a lens of 11 in. focal length will require a distance of 23 ft., so that the studio must be about 30 ft. long. For cabinet portraits (a head measuring about 1·6 in. or a full-length figure 4 in. on paper 6 × 4¼ in.), or for post cards (5½ × 3½ in.), the same length of studio would allow the use of a lens of 21 in. focal length for head and shoulders, or a lens of 14½ in. focal length for a full-length portrait, these focal lengths being the shortest which permit the camera to be placed sufficiently far from the subject to produce an agreeable perspective.

The table below indicates the distances between the sensitive plate and the subject necessary to obtain the image of a head or of a full-length figure, of given dimensions, taking the focal length (F) as unit of distance—

Head (Length 9½ in.) Reduced to				
0·8 in.	1·6 in.	2·4 in.	3·2 in.	4·8 in.
14·1F	8·2F	6·25F	5·33F	4·5F

Figure (Length 5 ft. 5 in.) Reduced to				
2·8 in.	4 in.	6 in.	8·in.	10 in.
25·6F	18·6F	13·1F	10·4F	8·75F

The only calculation to be done is to multiply the number given above by the focal length of the lens to be used.

It is no good trying to use a large aperture with lenses of very great focal length, since the depth of field would be insufficient even for a profile portrait; it would constantly be necessary to use the lens at a much smaller aperture. $F/3{\cdot}5$ can be taken as a practical limit for a lens of 12 in. focal length, $F/5{\cdot}6$ for 20 in., and $F/8$ for 30 in. (See § 80 on "Conditions Affecting the Depth of Field.")

116. Practical Testing of Lenses. The practical testing of a lens should be carried out under conditions as similar as possible to those in which it will be used[1]; it would be as absurd to test on a distant subject a lens intended for process work as to test on a close-up subject a lens to be used for aerial photography.

As far as possible, the test of a lens should be carried out on a camera of larger size than the maximum field of sharp definition expected, choosing preferably a camera known to be in perfect working condition, in order to run no risk of attributing to the lens any constructional faults of the apparatus, such as lack of register between the positions of the ground glass and the sensitive emulsion which is substituted for it after focussing.

The first test to carry out is that for achromatism. For this, according to the intended normal use of the lens, either a page of a newspaper stretched on a wall, or a brick wall with bold lines, should be used as a test object, both being photographed obliquely from an angle of about 45°. Focussing having been done very carefully on an easily identifiable vertical line, a photograph is taken at the full aperture of the lens, preferably on a slow plate or lantern plate, so that there will be no trouble from excessive graininess of the image. If achromatism is exactly corrected, and *if the dark slide is in register with the focussing screen*, the sharpest line on the photograph will be that focussed on.

To find the extent of the field of good definition without using a larger camera, it will be necessary to decentre the lens as much as possible, noting the amount, so that it will be easy to identify the position of the centre of the field on the photograph. It must be assumed that the definition is symmetrical (which will be the case with a centred system), unless the test is repeated with the decentring in the opposite direction or after unscrewing the lens half a turn in the flange (and readjusting the focus).

To test a process lens, a number of good proofs from half-tone blocks spread over the field embraced by the lens may preferably be used as a test object and photographed the same size or slightly smaller. To test a portrait lens, papers printed in large type are pinned against the wall of the studio and photographed at about 16 ft. distance. To test a landscape or architectural lens, choose a large façade in brickwork with bold joints as test object, and photograph at a distance of about 60 ft., and as far as possible with the lens axis at right angles to the wall.

For each of these tests it is necessary to take

[1] The results of practical tests, which are the only ones open to the user, are valid only when the same conditions apply as in the test, a very slight variation in focussing sufficing to modify them greatly. It is therefore necessary to make several tests with systematic variation in focussing. The tests made by lens makers are made to determine the path of the rays that would, in a perfect lens, converge to a point.

several photographs, one at full aperture, one at an aperture of about $F/30$, and one at an intermediate aperture.

After making sure that the dark-slide and focussing screen are perfectly in register (§§ 161 and 188), and after focussing as accurately as possible (§ 308), the photographs are taken on slow plates with a relatively short exposure, and then developed to obtain great contrast. After being finished and dried, the negatives are examined under a lens magnifying about 5 times, and it will then be possible to fix the limits of the sharp image and measure the diameter of the field.

When comparing different lenses, care should be taken to make the comparison at equal relative apertures and at equal exposures on identical plates, which should be immediately developed together. If each of the lenses is mounted on a shutter, do not trust to the speeds marked on the shutters, which are rarely accurate. It is necessary to work on slow plates under poor illumination, so that the exposure is at least 10 seconds, which will be long enough for errors of timing to be inappreciable. Under these conditions, which are easily realized, the sharpness and contrast of the negatives may be compared.

117. Preservation and Care of Lenses. When not in use, lenses should be kept in a clean, dry place, in a dust-tight sheath-case or at least with caps on both ends. Where the lens has cemented components, which are liable to exposure to excessive heat (particularly if occasionally employed on an enlarger using artificial light), shield it from the source of light by an opaque screen of card or metal, except when actually focussing or exposing.

Strict cleanliness of all surfaces is a necessary condition for obtaining clear images. A lens of which the surfaces diffuse the light either through condensation of steam or adherent dust, or grease marks due to contact with the fingers, will form a *halo* round all the high-lights, and more or less completely veil the shadows.

Meticulous care is necessary in cleaning the lens surfaces. In the first place, atmospheric dust contains, among other things, numerous microscopical grains of sand, liable to scratch window or plate glass. Now optical glasses are considerably softer than common kinds, so that the rubbing of these grains on the surfaces of the lens, in the course of unskilful cleaning, causes the innumerable scratches seen on many lenses after some years' service. This slight abrasion will considerably impair the qualities of the lens.

In cleaning, all substances which are likely to deposit grease on the lens (such as chamois leather) should be avoided. Silk electrifies the glass and causes more dust to adhere. Linen cloth, taken from old linen garments, is very suitable for cleaning if recently washed and kept away from dust (in a well-closed metal box). The special paper known as "papier Joseph" may also be used, but the best cleaner, if it can be obtained, is the pith of shrubs (rush, sunflower, and elder), stripped off as required.

Before cleaning, the surfaces should be dusted without applying pressure to the glass, e.g. with a very soft dry brush, kept for this purpose in a dust-proof case, and washed from time to time in denatured alcohol and immediately hung up to dry in filter paper.

The inner surfaces will not require dusting and cleaning so often as the outer surfaces, lens mounts with iris diaphragms being practically dust proof. Never unscrew at the same time both the front and back components, nor, *a fortiori*, the components of a stereoscopic pair, in order to avoid the risk of interchanging them.

After dusting and dry cleaning, see that the surfaces are perfectly clean, which is best done in a room lighted by a single lamp, not too bright, looking at the lens held in a position slightly off the line joining the lamp and eye. If a dirty mark is seen, moisten it with a little soapy water and wipe. If this does not remove it, moisten with a little denatured alcohol, taking care that none of it gets between the lens and its cell, as it might dissolve the Canada balsam used for cementing: after a few seconds, wipe dry.

In any case never try to polish the surfaces of a lens with a powder (chalk or rouge) or polishing paste, for the slightest wearing away of the glass which this polishing would produce would be sufficient to deform the surface and impair the quality of the lens. Never apply to the glass any alkaline solution, however weak, as optical glasses are extremely sensitive to action by chemical reagents and even to damp.

Every time the lens is taken to pieces, be careful to wipe the inside of the mount, and see that the matt varnish has not peeled off at any place, showing bare metal which would reflect any light falling on it. If there is a bare spot to be seen, apply a little black matt optical varnish.

To prevent subsequent steaming of the inside surfaces it is advisable to assemble the lens in a very dry place or close to a fire.

CHAPTER XI

LENS ACCESSORIES: SUPPLEMENTARY LENSES, LIGHT-FILTERS, PRISMS AND MIRRORS, POLARIZERS, LENS HOODS, SKY SHADES

118. Supplementary Lenses (Magnifiers).[1] Cameras with fixed focus will produce a sharply defined image of the object only if it is at a sufficient distance from the camera, the picture being necessarily on a small scale. It has long been the custom to remedy this defect by mounting additional positive supplementary lenses or magnifiers in front of the lens. The camera "seeing" only at a distance, like a long-sighted person, it was natural to correct it by the same means.

It must be emphasized in the first place that such magnifiers,[2] and also the negative supplementary lenses referred to later, must be correctly centred with the objective. This excludes the use of all universal spring mounts, which can be adapted to lens tubes or hoods of different diameters. The supplementary lens should be mounted in a small tube, which is either screwed into the inner thread of the lens hood or on to the outer mounting of the objective, or it can be simply slipped tightly over the barrel of the lens.

For example, suppose that it is desired to photograph a subject 1·50 metres (5 ft.) from a camera which is focussed on infinity or which gives sharp definition of objects at an infinite distance. It will then be sufficient to place a converging lens of 1·50 metres (5 ft.) focal length in front of the objective, that is, a glass of 0·67 diopters for a long-sighted person. The subject will then be situated in the focal plane of such a supplementary lens. Rays of light coming from any point on the object to the magnifier are then transmitted from the latter and arrive on the objective as a beam of almost parallel light, i.e. in the form of rays issuing from a very distant point.[3] It will thus be seen that if a set of supplementary lenses with properly chosen focal lengths is available, a fixed focus camera can be used to photograph objects at all distances which are less than the minimum distance fixed by the limits of the camera.

With a camera which has a focussing adjustment but is of too short extension to allow of a very near object being photographed, the use of suitably chosen supplementary lenses will further extend its scope. If, for example, the camera cannot be focussed on a shorter distance than 2 metres (6½ ft.) and it is desired to photograph an object placed at a distance of 1·50 metres (5 ft.), the camera should be set at 2 metres and on the front of the objective is placed a magnifying lens of power equal to the difference of the proximity $\left(=\frac{1}{\text{distance}}\right)$ of the object and of the point on which the camera is focussed, i.e. in this case:

$$\frac{1}{1{\cdot}50} - \frac{1}{2} = 0{\cdot}67 - 0{\cdot}50 = 0{\cdot}17 \text{ diopters.}$$

This corresponds with a focal length of $\frac{1}{0{\cdot}17}$ = 6 metres (19½ ft.).

With subsequent adjustment of the focus on a convenient distance, it is possible to use any magnifier whose focal length comes within the limit thus calculated and that corresponding to the use of the camera focussed on infinity.

Due regard must, however, be paid to the fact that the supplementary lenses usually employed are uncorrected, and their use with an objective introduces aberrations into the resulting image (chromatic, spherical, astigmatic, etc.), which are more pronounced the stronger the additional lens. For this reason, if there is a choice between two supplementary lenses of different focal lengths, it is advisable to choose the one of the greater focal length, and to focus the camera accordingly.

Another fact must be taken into account, viz. that the focal length of the combination is smaller than that of the objective itself, so that the latter will have a larger effective aperture than that indicated by the marking on the diaphragm. For example, suppose that the

[1] It should be borne in mind that each optical accessory increases the volume of stray light due to successive reflections (§ 57).

[2] Instead of the biconvex (or biconcave) lenses used in ordinary spectacle making, preference should be given to the convergent or divergent periscopic forms, placed with the concave side towards the lens at about 12 mm. from its front principal point.

[3] In practice, if a fixed focus camera is set in focus on the hyperfocal distance instead of infinity, it is well to arrange the object slightly on the far side of the focal plane of the supplementary lens.

objective has a focal length of 15 cm. (6 in.), and that a magnifier of 1 metre (3 ft.) focal length is being used (6·7 and 1 diopters respectively), the resulting focal length will then be $\frac{1}{7 \cdot 7} = 13$ cm. (§70). Thus the effective actual aperture of each stop will be increased in the ratio of 13 to 15, that is, multiplied by 1·15, so that, taking into account the losses by reflection at two additional surfaces (about 10 per cent), the effective speed of the lens will be increased by about 20 per cent. When using a less powerful supplementary lens, the gain in speed would be considerably less, and the gain may easily disappear or be converted into a loss by the reduction of light due to surface reflections. Moreover, the increase in speed is generally illusory, for if the image is required as sharp as that obtained when the objective is used alone, it is necessary to use a smaller aperture.

This reduction of the focal length also brings about, *ipso facto*, an increase in the depth of field, which at the same time is further augmented, since an incompletely corrected optical system has always a slightly greater depth of field (§86).

Positive supplementary lenses, while useful for record work, have unfortunately been used for portraiture, and as if the majority of photographers had not already a marked tendency to place their models too near the camera, the use of such supplementary lenses has been popularized under the name of "*portrait attachments*." It cannot be too strongly emphasized that a portrait taken at too close a range is not far removed from a caricature of the sitter.

While formerly only bi-convex lenses were available for spectacle making, progress in ophthalmic practice has led to a preference for converging meniscus lenses, which also make the best supplementary lenses. The concave surface, which is turned towards the eye in spectacles and pince-nez, will also be that which must face the objective when it is used as a supplementary lens.

119. Tele-attachments. In the same way that the focal length can be reduced by using converging supplementary lenses, so it can be increased by the addition of a diverging lens (R. Viney, 1897). The use of such a lens is of great advantage in landscape or portrait photography with non-separable objectives. The increase in focal length causes a reduction of the angle of view. The softening of the definition resulting from the aberrations of the uncorrected lens, and the greater homogeneity of the image in the various planes, advantageously diminish what might be called, from an artistic point of view, the defects of a too well corrected lens.

It is possible to calculate the approximate value of the focal length (within 5 per cent) by assuming the power of the combined system to be equal to the difference between the powers of the objective and the supplementary lens. If an objective of 15 cm. (6 in.) focal length, or 6·7 diopters, is coupled with a diverging lens of 50 cm. (20 in.) focal length, or 2 diopters, the power of the combination will be in the neighbourhood of 4·7 diopters, viz. a focal length of about 21·5 cm. ($8\frac{1}{2}$ in.). For avoidance of excessive aberrations, and the need of making an adjustment in focus as when using an anachromatic objective, the power of the diverging attachment must not be as much as half that of the objective. If, on the other hand, a supplementary lens of very low power is employed, its effect is very nearly negligible. In practice, the focal length of a diverging lens attachment should not be more than double nor less than a quarter of the objective with which it is being used.

Diverging meniscus lenses are to be preferred to cheap bi-concave spectacle lenses, and are used with the concave side towards the objective.[1]

120. Light-filters. Light-filters, the optical properties of which will only be considered here, are formed either by a coloured liquid contained in a plate glass cell with plane and parallel faces or by a film of coloured gelatine, which is either used as such or cemented with Canada balsam between thin, flawless plate glass, or thick optically worked pieces of glass.

With the exception of the plain gelatine filters, which are too thin to modify the rays of light to any appreciable extent, any filter which is placed in front of or behind an objective alters the position of the sharp image, and introduces various aberrations into it.

If a pencil of light is made to converge at a point P by some optical system (Fig. 89), and a thick sheet of glass L, or some other transparent material with plane and parallel faces is interposed, it is easy to show that the image is displaced from P to P', its distance from the

[1] In this connection, reference may be made to the possibility already mentioned (§ 108, in note) of enlargement of the image by mounting a spectacle lens, which has been adjusted for viewing an image at infinity, in front of the objective, focussed on infinity.

optical system being *increased*. If the inclination of the pencil is relatively small on the face of the sheet, the point P' is situated on the perpendicular drawn through P in a direction common to the two effective faces of the plate (L), and, if the latter is of glass, the displacement PP' of the image is approximately equal to a third of the thickness of the filter.[1]

If the filter is placed in such a way that the optical axis of the lens is perpendicular to its face, this being the necessary condition for the whole to constitute a centred system, the effect of the filter will be the same for every pencil, and it will be sufficient to increase the distance between the plate and the objective by a third of the thickness of the filter, in order that everything may be in practically the same condition as before the introduction of the filter. If, on the contrary, the filter is not perpendicular to the lens axis, the differences of obliquity of pencils equally inclined to the optical axis cause deformation of the image. This may not be very considerable, it is true, but it would be particularly noticeable in negatives which had been taken through a badly placed filter, and which were required to give exactly superimposable images (three-colour work).

When the filter is placed between the subject and the lens, it is sufficient to consider the point P' (Fig. 89) as one of the points on the object, and it will be clear that, after passing through the filter, the rays will seem to come from the virtual point P, *which is nearer to the lens than the actual point on the object* P'. Thus, the whole object is brought virtually nearer the objective, and the amount of displacement is equal to about one-third of the thickness of the filter.

The image is formed *farther* from the lens than before interposition of the filter. If an object in the plane focussed on is reproduced on a scale of $1/m$, the *increase* in extension of the camera will be equal to the thickness of the filter[2] divided by $3m^2$, a displacement which is negligible even for the thickest screens, when the object being photographed is not very near the lens.

In addition to the displacement of the image resulting from the interposition of a filter, the image is affected even if the filter is optically perfect; these various aberrations, however, are fortunately small enough to have practically no disturbing effect.[1]

Cheap commercial filters are mounted between ordinary plate glass, the faces of which are usually neither plane nor parallel, and their use instead of optically perfect filters means

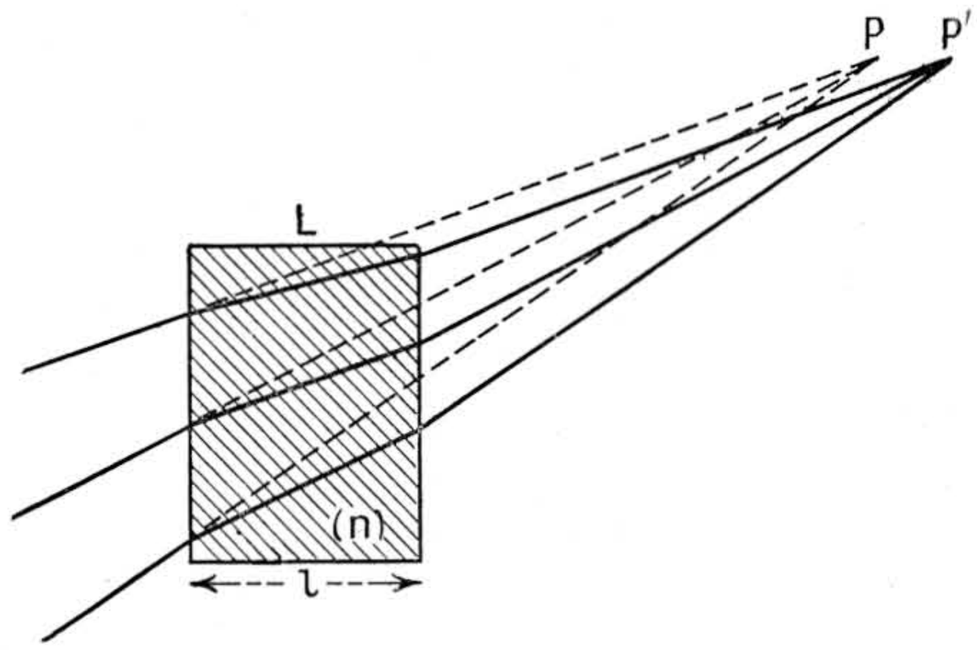

FIG. 89. EFFECT OF LIGHT-FILTER ON FOCUS

that the image may suffer considerably in quality, especially when such filters are used with a lens of great focal length and relatively large aperture. When this is the case, plain gelatine screens are to be preferred to filters of mediocre quality.

If the filter faces are parallel only one image is seen when looking at the reflection on the filter of distant objects, the line of vision being preferably glancing along the surface of the filter. If the faces are not parallel two separate reflected images will be seen.

[1] A plate of thickness l of a substance of which the refractive index is n, is equivalent, from the point of view of the passage of rays of light, to a thickness of air equal to l/n; the difference between its actual thickness l and its effective thickness l/n, viz. $l(n-1)$, represents the displacement of the sharp image, measured in the direction of the propagation of light. The glass used in the construction of filters (crown or plate glass) has a refractive index of about 1·5, so that the displacement of the image is about $l/3$.

[2] It is easy to show that the displacement of the image in this case is strictly equal to $l/\left(3m^2 + \frac{lm}{f}\right)$. The second term in the denominator is negligible compared with the first if m is appreciably greater than unity (reduction) and if the thickness l is only a small fraction of the focal length f.

[1] In the case of thick filters mounted in front of a wide-angle objective, the chromatic aberrations may become of considerable importance, especially if the object is to superimpose the negatives taken through variously coloured filters; an appreciable barrel-shaped distortion is noticeable if the filter is between the lens and the image, while it is crescent-shaped if the filter is between the lens and the subject, slight curvature of the field occurring in both cases. For an equal thickness of filter, these aberrations are greater when the filter is on the same side of the lens as the nearest of the two conjugate planes. This is one of the reasons why filters are usually mounted in front of the lens for portrait or landscape photography.

121. The Best Position for Mounting Light-filters. A misconception which is frequently entertained is to suppose that the efficacy of a light-filter can vary according to its position in the beam of light. A filter always absorbs a definite proportion of each incident radiation, whatever the intensity of the light or its area of cross-section at the point where the filter is placed. For instance, if a light-filter, used near the lens, cuts the beam of incident light at a cross-section twenty times less than would a filter placed in contact with the sensitive plate, and if the quantity of light incident on the filter is therefore twenty times greater, from each of these radiations which pass through it, it will absorb a quantity twenty times greater per square centimetre. However, the total quantity of the whole beam of light absorbed will be the same, and the selective effect will be exactly the same.

A light-filter may be placed (*a*) between the source of light and the object to be photographed; (*b*) between the object and the lens of the camera, and in this case it is usually mounted on the lens; (*c*) between the lenses of the objective; (*d*) between the lens and the sensitive plate, adjacent to the lens; (*e*) in front of the sensitive plate, almost in contact with it.

Position (*a*), generally used in micrography, has sometimes been used for the three-colour reproduction of Autochromes. But it is difficult to imagine a studio glazed entirely with light-filters.

Position (*c*) should be rejected on principle, except when using gelatine screens of negligible thickness, which can be placed against the iris diaphragm after unscrewing one of the components of the objective. Every filter of appreciable thickness, being equivalent to two-thirds of its thickness of air, would produce very nearly the same effect as if the separation of the components of the lens had been reduced by a third of the thickness of the filter. This would seriously interfere with the definition unless the filter formed an integral part of the lens and was placed in position, with due regard to its effect, by the optician.

In addition to the fanciful argument to which we have done justice at the beginning of this paragraph, the fact that a filter, when used close to the sensitive plate, can be of mediocre optical quality without disadvantage, has been put forward in favour of position (*e*). Unfortunately, any local defect in such a screen manifests itself on the image by a spot. Further, a "focal-plane filter" of indifferent quality is at least as expensive and immeasurably less workable than a "lens filter" of satisfactory quality, or, better still, a plain gelatine screen.

The only two positions between which choice usually lies are therefore those in front of (*b*) or behind (*d*) the lens of the camera.

In the circumstances usually met with in practice, a filter placed in front of the lens does not alter the focus,[1] which is a very appreciable advantage in the case of cameras with which the focussing is done on a graduated scale. On all other cameras this position of the filter lends itself most readily to taking on and off with the minimum of trouble. The filter can either be mounted in a ring, which is fitted over the lens like a cap, or provided with threads which allow of it being screwed on to the lens hood. In short, in all cases where the object to be photographed is more than twice the focal length distant from the objective, this position is, in the case of thick filters, that which causes the least risk of introducing disturbing aberrations into the image.[2]

122. Care of Light-filters. When not in use, all light-filters should be protected from the action of light, since the dyes with which they are made are not invariably unaffected by its prolonged action, and thus changes in their absorptive power may be caused in time.

When cleaning filters cemented between plate glass, the same precautions should be observed as when cleaning photographic lenses. Further, water should never be allowed to come into contact with the edges, since any wetting of the gelatine film would cause the latter to swell and might cause deformation or even separation of the glasses.

Plain gelatine filters[3] should never be handled except by their edges or between fine tissue

[1] We are not considering here the particular case of filters for use with Autochrome plates, which will be studied later.

[2] In commercial photographic work which calls for the use of a set of several light-filters, instead of fitting each filter in a separate metal mount, an adapter is placed in front of or behind the lens of the camera, into which any filter can be fixed by means of a movable holder. If the lens is fitted with Waterhouse stops it should be possible to introduce into the opening for the stops a gelatine filter which has been slipped between two thicknesses of thin blackened card, forming a diaphragm.

[3] After being cut out, gelatine filters can be protected by dipping in a celluloid varnish. The filter should be held by a corner or by a point at the circular edge. After draining it should be put to dry. The operation

paper ; any contact with the fingers invariably leaves fingermarks which cannot be removed and which seriously impair the definition. These screens must be protected from heat and damp, and when not in use should be kept between the leaves of a small notebook of white paper. When it is desired to cut out a circle of gelatine filter for fitting into a lens, breakage of the film can best be avoided by cutting it out between two pieces of strong paper, one of which has the circle to be cut out marked on it. As gelatine screens continually undergo slight expansions and contractions according as the air is more or less damp, they should never be fitted into any kind of rigid frame. Lastly, gelatine filters should never be kept between plate glass unless cemented on both sides with Canada balsam (solution in xylene). In this way multiplicity of reflecting surfaces and risks of tearing the gelatine will be avoided.

122a. Polarizers. In a normal condition, light vibrations, perpendicular to the direction of propagation (§ 2), are scattered at random in all possible directions. Various conditions can polarize light, that is, preserve only the vibrations parallel to a given plane, called plane of polarization. For instance, the light diffused by a blue sky is polarized, and this all the more completely as the sky is clearer. The light reflected on a non-metallic surface is polarized, the polarization being maximum (without, however, being complete) when the reflected rays are perpendicular to the refracted ones (reflection under an angle of 35° with the reflecting surface in the cases of glasses with a refractive index of 1·5). If the surface is transparent the refracted light is also polarized, and it is then possible to decrease the proportion of non-polarized light by causing the light to pass through several thin plates under the same orientation. The light that has passed under a given incidence a suitable assembly of double-refracting colourless crystals (Nicol or Glazebrook prisms, made of Iceland spar) is totally polarized. Light that has passed a double-reflecting crystalline dichroic plate (tourmaline, Heraphathite or iodosulphate of quinine) or a film holding in suspension a multitude of double-refracting, dichroic, ultramicroscopic crystalline needles similarly orientated (luteo-cobaltic periodosulphate; E. H. Land, 1934) is, at least in a spectral interval comprising the great majority of visible rays, formed mainly of polarized light.

Polarized light remains polarized after reflection on a polished surface, but it is de-polarized by diffusion on a matt surface or by passing through a ground glass.

If two polarizers are placed one behind the other, the light polarized by the first passes freely through the second if the planes of polarization are parallel. It is totally extinguished if these planes are mutually perpendicular, and it is partially extinguished in all the intermediate positions, and to an increasing extent as the angle between the two planes approximates to a right angle.

Some attempts had been made to utilize in photographic practice the particular properties of polarized light, but these applications were restricted by prohibitive cost and by the very narrow angle of field of effective polarizers. Very numerous practical applications have been made possible by the recent placing on the market of polarizing screens of fairly large dimensions, reasonable efficiency in the visible extent of the spectrum and accessible cost (Eastman Pola Screens, Land; Zeiss Herotar Screens, Herapath).

The fact that these polarizers extinguish all components of vibration other than those orientated in the plane of polarization would, in the case of colourless polarizers, cause the exposure to be doubled. It has to be quadrupled owing to the grey-brown colour of the polarizers used in photography.

For some purposes it is only necessary to use one polarizer, mounted on the lens. Others require at least two polarizers, one on the lens and one in front of each of the sources of light illuminating the subject.

By using one polarizer (the suitable orientation of which must be found by examining the image on the ground glass screen of the camera while turning the polarizer on itself in its own plane), it is possible at will to decrease the luminosity of a blue sky without modifying the brilliance of other parts of the subject, and to decrease very considerably reflections on all brilliant non-metallic surfaces (glassware, water, earthenware, lacquered metal and other varnished objects) by directing the axis of the lens at an angle of about 35° to the surface to be photographed, thus causing to appear objects placed behind this (transparent) surface (Figs. 90A and 90B) or the actual texture of the subject.

must then be repeated, the filter being held by the opposite corner or by the point at the edge opposite to the first one.

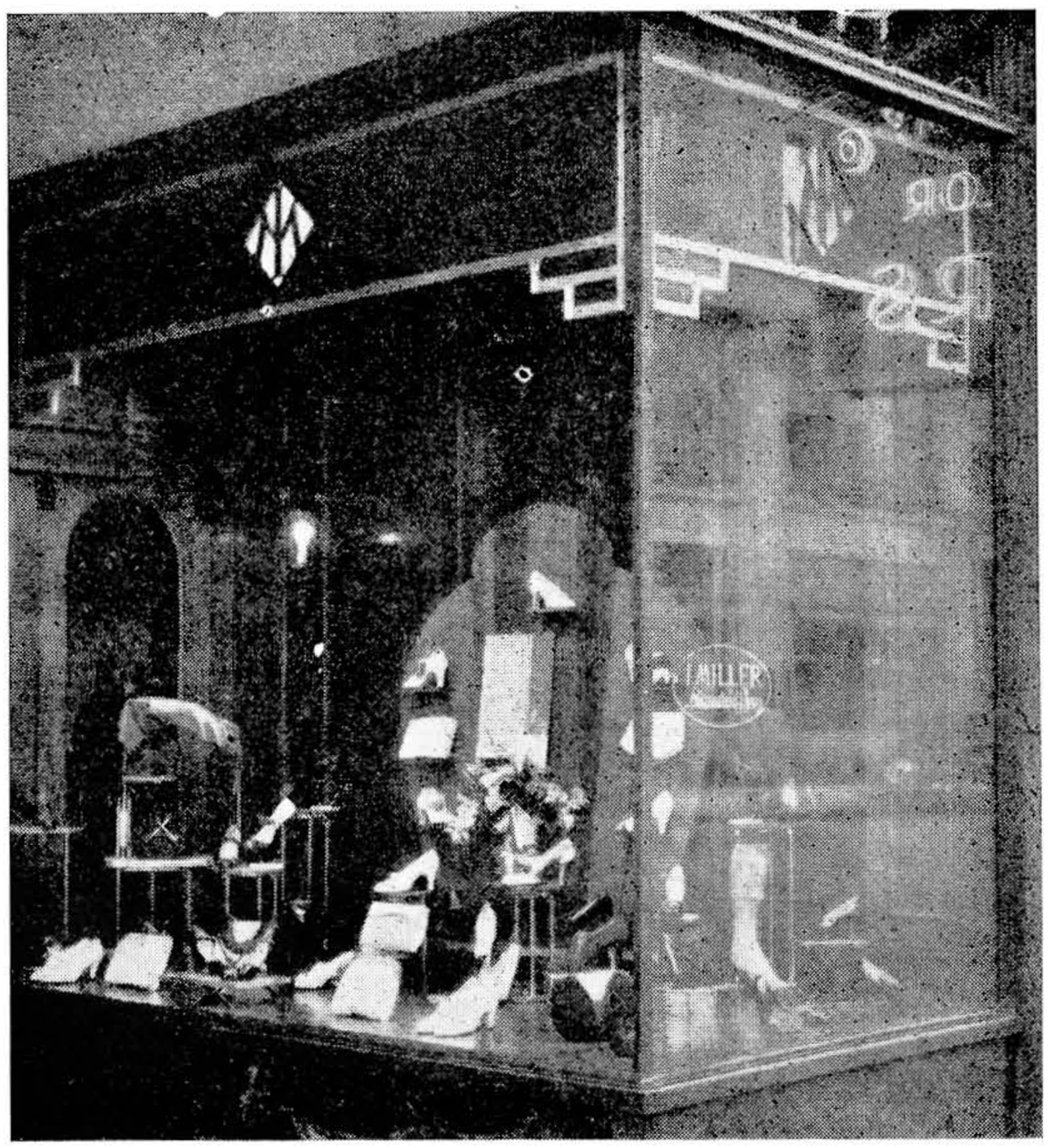

FIG. 90A. PHOTOGRAPH TAKEN WITHOUT POLARIZER
Kodak Ltd.

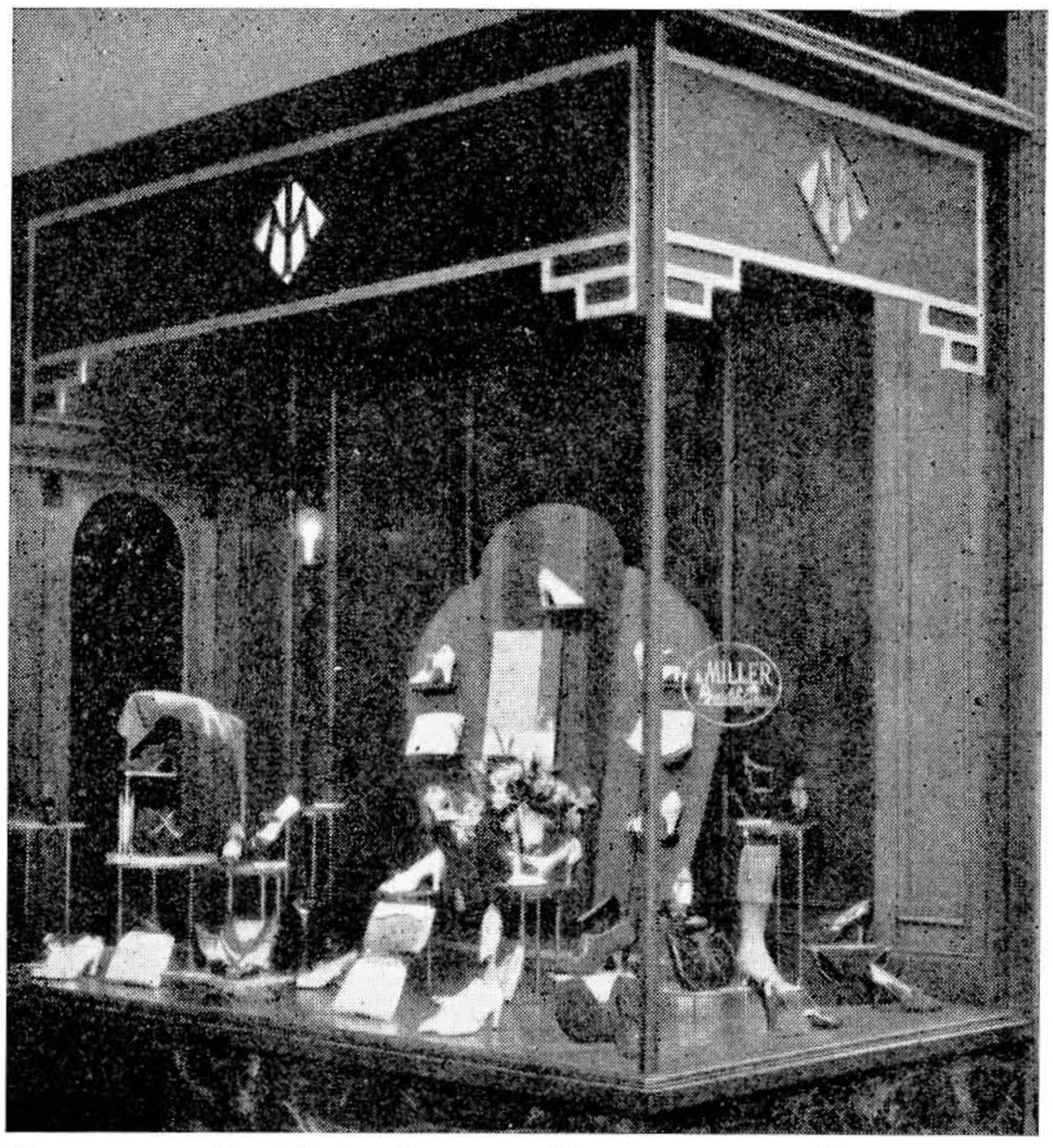

FIG. 90B. THE SAME SUBJECT PHOTOGRAPHED THROUGH AN EASTMAN POLA SCREEN
Kodak Ltd.

By photographing through a polarizer a number of objects illuminated by polarized light one decreases at will the reflections on all brilliant surfaces (including metals), whatever their positions may be. These reflections can even be totally extinguished if the planes of polarization are crossed ;[1] this orientation is that especially adopted for the photography of varnished paintings or of all documents under glass.[2]

123. Prisms and Mirrors. We will consider here only the inaccurately named total-reflection prisms and the mirrors (at an angle of 45°) as used in commercial photography. They are employed either for obtaining a picture the right way round direct (with certain methods of printing, reversed pictures would otherwise be obtained), or for the photography of ceilings, articles arranged on a horizontal table (jewels, natural history specimens), and, more particularly, for immersed objects.

The ideal reflector is a metal mirror, but unfortunately such articles are very costly ; in their place, optically worked glass mirrors, which are silvered on the surface, are employed, it being possible to protect the silver, to a certain extent, by a very thin coat of celluloid varnish.[3]

A mirror has the following advantages over a prism : It absorbs less light ; does not cause the slightest aberration, and does not limit the angle of view as does a prism. On the other hand, a mirror possesses the disadvantage of being extremely fragile in so far as the reflecting surface is easily damaged.[4]

The one advantage of a prism is the perfect stability of the silvering, which is applied externally on the hypotenuse (and which excludes all possibility of total reflection) without risk of any doubled image. Prisms, however, do not permit of an angle of field greater than about 30° being used without other reflections creeping in. The definition is often slightly inferior at the margins of the field from aberrations, which are the same as for a cube of glass with the side equal to the length of one side of the prism.

Both prisms and mirrors are best mounted behind the camera lens, the mounting being on a small board which is interchangeable with the lens board. The reflecting surface should be turned to make an angle of 45° with the optical axis of the lens, in such a plane that, after reflection, the optical axis is either horizontal or vertical, according to the work in hand.[1] This adjustment is only possible after repeated trials with the reflector mounted between the lens and the object to be photographed. Ordinary mirrors have occasionally been used, in the absence of a wide-angle lens, for the photography of interiors. In this way the effective optical distance between the object and the camera can be doubled, but in the case of brightly illuminated or reflecting objects the definition usually suffers from doubling of the lines, etc.[2]

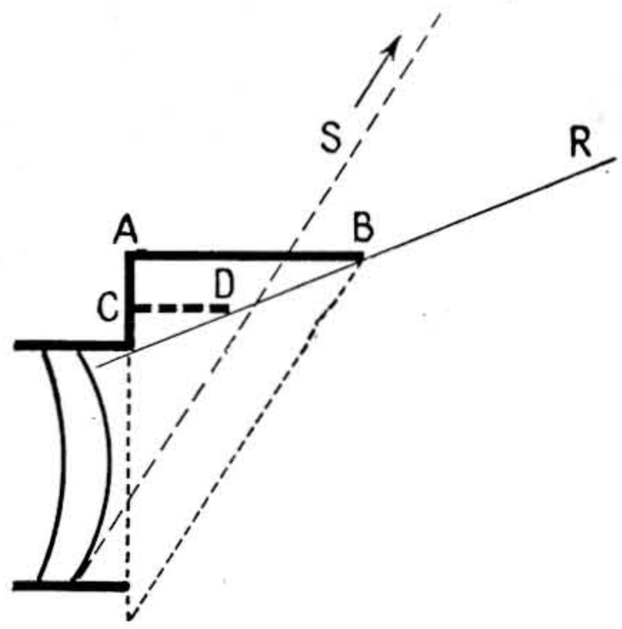

FIG. 91A. ACTION OF LENS HOOD

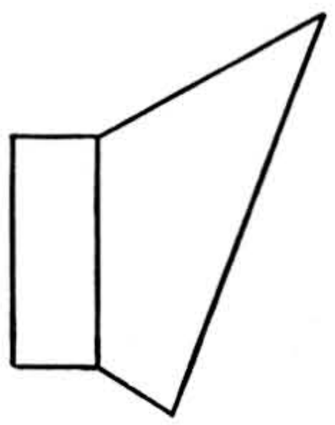

FIG. 91B. CONE PATTERN OF LENS HOOD

124. Lens Hoods. Any light reflected in the lens (§ 57) or which is scattered in the camera

[1] On the other hand it is possible to exaggerate these reflections if the polarization planes are parallel, the depolarized light diffused by the non-reflecting surfaces being then reduced in the proportion 2 : 1 relatively to the polarized light of the reflections.

[2] This same orientation permits the contrasts to be increased to a higher degree in the photography of documents on matt or granular paper than that of a glazed print, the structure of the paper being at the same time eliminated owing to the extinction of all light reflected by the rough surface.

[3] Ordinary mirrors which are silvered on the back give rise to double images, except those of very distant objects. In optical instruments there is an increasing tendency to substitute for the chemical silvering of glass a deposit of aluminium obtained by sublimation.

[4] The silvering on an unvarnished mirror will not adhere to the glass when damp. For periodical cleaning and re-polishing care should be taken to dry the mirror, the cloth, and the polishing rouge (optical quality) by warming.

[1] In some coin-operated automatic photographic machines, breaking the optical axis at a right angle is avoided by placing the hypotenuse face of the prism parallel to the optical axis (Amici mounting) ; the angle of field is then still less extensive than in a normal mounting.

[2] Surface-silvered mirrors have also been used in the construction of cameras which are designed to accommodate lenses of great focal length, so reducing the bulk of such cameras. In such cases, the part played by the mirrors may be compared with that of the prisms in prismatic binoculars for long-distance observation.

and distributed more or less uniformly over the image necessarily lessens the contrasts and tends to veil the shadow detail. Scattering of appreciable quantities of light can usually be traced to two causes.

In the first place, small defects in the polish of the lenses and moisture or dust on their surfaces uniformly diffuse a certain proportion of the light which should go towards the formation of the latent image. Moreover, if the sun, though not necessarily included in the angle or view, is shining on the front of the lens, any defects on the surface of this lens (or on any accessory such as a supplementary lens or colour filter which is placed in front of the lens) will cause a considerable quantity of light to diffuse into the camera. The same effect is produced, although to a smaller extent, whenever a photograph is taken in the open air, since the lens receives light from all parts of the sky, apart from that in the angle of view.

In the second place, the field illuminated by a lens (§ 55), already considerably greater than the field which is sharply covered, is naturally very much larger than the portion of field utilized. Any rays of light outside the useful field strike the interior walls of the camera, and these latter, even if matt black, always scatter an appreciable fraction towards the plate.[1]

A lens hood is used to eliminate, or at least to diminish, the various causes of the incidence of stray light on the plate, by protecting the glasses of the lens from light coming from above and by intercepting as far as possible any light that the lens would transmit to the sides of the camera. The use of this accessory may be said to be necessary for all out-door photography, especially for photographs taken against the light, and it is also of considerable advantage when working in a glazed studio.

It should be pointed out that of two lens hoods, each shading the lens to an equal extent, the one farther from the lens will be the more efficacious from the point of view of protection from the sun. Thus, in Fig. 91A, the two opaque screens AB and CD both shield the lens from the ray R, but only AB, that is, the one farther from the optical axis, entirely protects the front lens from the direct rays of the sun in the direction S.[1]

Unless the lens hood is adjustable, it is not possible to confine the admission of light strictly to the beams received by the sensitive film, for if the lens be decentred, it will no longer cover the plate completely.

One of the best lens hoods would undoubtedly be a shade such as AB, hinged at A as high as possible, in such a way that the edge B can be raised or lowered to the limit of the field desired (B. T. J. Glover, 1920). Light from the sides is shielded by two small flexible curtains shown by dotted lines in Fig. 91A. In practice, one is usually confined to fitting on to the lens either a lens hood, represented in section by an obliquely truncated cone (Fig. 91B), or a cylindrical tube[2] with the end cut obliquely, which is slipped on to the lens, more or less, according as the lens is decentred or not. Before making a lens hood of any sort, it is best to make several trials with stout paper, so as to be certain that the lens hood does not cut the angle of view.[3]

[1] From this point of view, the pleated bellows used on the majority of focussing cameras are certainly better than those of soft stretched leather, employed with certain folding cameras. But the only really efficient means of protection, which is very difficult to apply to folding cameras and cameras which are fitted with lens movements (rising or cross fronts), consists in placing a series of diaphragms of progressively increasing aperture between the lens and the plate, such as those fixed in cameras for aerial photography, which are fitted with very long focus lenses, of which only a small fraction of the field is used.

[1] It has been stated (C. Puyo, 1906) that for a lens hood to be effective in all cases, i.e. to protect the lens from the sun, whatever its position outside the angle of view, the lens hood should be extended to infinity along the bounding line R, a condition which is obviously impracticable. However, the farther the lens hood is placed from the optical axis, the more efficient it will be, and will remain effective as the sun approaches the limiting line R.

[2] In this connection, the following methods of making such a tube are suggested: Black felt (taken from an old hat) fastened round the lens with press-buttons; leather-cloth, kept in place with a strong rubber band; narrow strips of wood glued on to a sleeve of black linen in the manner of the cover of a roll-top desk. As made on any of these lines, a lens hood can be folded flat when not in use.

[3] If the lens hood is made with a rectangular aperture parallel to the sensitive plate, the dimensions of the opening can be calculated from the formulae

$$l = d + L\frac{D}{E} \qquad h = d + H\frac{D}{E}$$

where l and h represent the length and height of the opening, L and H, the corresponding dimensions of the sensitive plate, d the diameter of the effective aperture, E the extension of the camera, and D the distance between the rectangular opening and the optical centre of the lens (or the diaphragm approximately). If the lens is raised by the amount e, the hood must be raised in the same direction by the amount $e\left(1 + \frac{D}{E}\right)$, both being measured from the centre of the format of the image.

On studio cameras the lens hood is usually formed by a piece of black cloth (extension of the focussing cloth), supported in front of the camera by a removable metal frame ; or the hood may take the form of a bellows connecting the lens front with an open-front frame, as used for the reproduction of transparencies.

125. Sky Shades. Landscape photography is simplified if the brilliancy of the sky and distance can be somewhat reduced without diminishing the intensity of the image of the ground

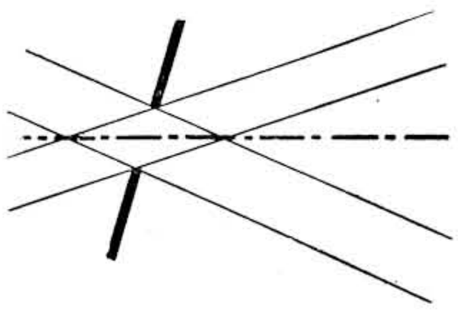

FIG. 92. DIAPHRAGM SKY SHADE

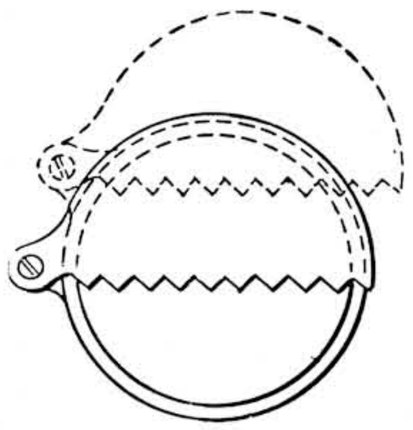

FIG. 93. SKY SHADE ON LENS FRONT

or foreground. The desired effect can usually be obtained by the use of a yellow filter in conjunction with an orthochromatic emulsion, but unfortunately the use of orthochromatic plates is not yet general. For this reason various procedures have been tried which can be used by themselves to lessen the contrast between the sky and the foreground, or to supplement the use of orthochromatic plates or films.

An old device for this purpose (W. J. Read, 1858) is an oblique diaphragm (Fig. 92), which was placed approximately at right angles to rays coming from the foreground, but which progressively reduced the light coming from the horizon or sky.

A device which allows of many variations consists in fixing an opaque screen with a serrated lower edge at some distance in front of the lens (Woodbury, 1885). The shape of the notched edge can be easily modified as required by making use of a screen consisting of a number of adjacent strips sliding in a suitable mount. A screen which is easily made is that shown in Fig. 93 (Busch, 1908). By rotation of the fixing ring on the lens mount and of the blade on the pivot, the serrated edge can be fixed at various distances from the optical axis or inclined at any angle, the effect produced being controlled by examination of the picture on the focussing screen.

The most usual form of commercial sky shade is that suggested by E. Joly in 1892, and consists of a uniformly graduated filter of gelatine or glass, usually of a yellow colour, which can be used as an orthochromatic filter when occasion arises. Such sky filters are made in the shape of a long rectangle, which is carried in a mount, allowing it to be raised or lowered according to the effect desired. The shorter side of the rectangle should be wide enough to cover the lens when placed at a short distance from it, even when the longer side of the picture is horizontal. The farther these screens are placed from the lens, the greater is their effect. In the extreme position, i.e. if they could be placed in the plane of the diaphragm, their only effect would be a uniform absorption of a certain proportion of the light without any difference between the sky and the rest of the picture. The effect of a filter such as AB depends upon its differential absorbing capacity, which becomes greater as the aperture of the lens is reduced and the distance between the lens and the screen is increased (Fig. 94). The same results would obviously be obtained by placing a screen inside the camera (in the position shown by $A'B'$), but it is then difficult to adjust to its best position. In practice, equivalent results can be obtained by the use of a sky filter, one half of which is uniformly coloured and the rest plain, the only condition being that it must be used slightly nearer the lens, such as the position CD. Such an arrangement even allows the

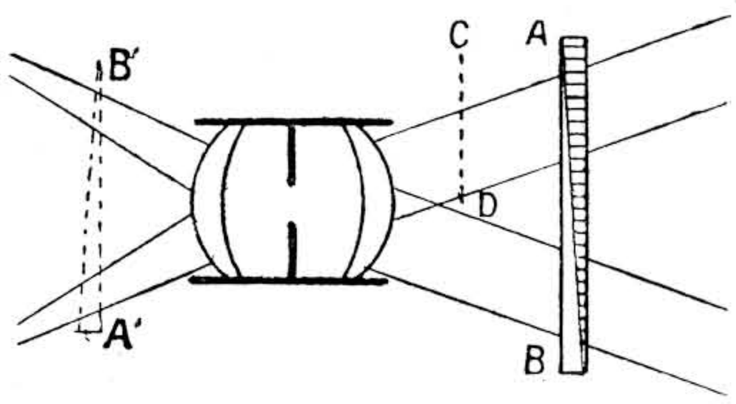

FIG. 94. ACTION OF GRADATED LIGHT-FILTER

exposure to be shortened, especially when using a non-orthochromatic plate.[1]

It should be pointed out that in many cases the moderate use of these accessories distinctly improves the rendering of skies ; any exaggeration of the effect should be avoided, since the sky takes on an unnatural aspect, suggesting that its colour near the zenith is a deep indigo.

[1] Opaque or neutral grey sky shades and polarizers (§ 122a) are the only ones suitable for decreasing the brilliancy of the sky in colour photography.

Such photographs of clouds can have no value whatever as meteorological records.

126. Soft-focus Attachments. In passing, mention may be made of the relatively recent appearance of devices, which, when used with a perfectly corrected lens, introduce slight softening of the definition without altering the focal length or the position of the image.

In particular, the use of a piece of glass with plane and parallel faces, one of which is slightly grooved, has been suggested (Lenhard, 1890). These grooves superimpose a blurred image on to the sharp image transmitted through their interstices. If the grooves occur only on the extreme margins of the glass, the closing of the diaphragm will sharpen the definition, since only the central plane-parallel portion of the glass is used.

The use has also been suggested of a kind of comb with long triangular teeth cut from colourless embossed celluloid (Misonne, 1932) arranged to slide so as to cover at will a more or less extensive portion of each bundle of rays, or of a plate with plane and parallel faces which is constructed by assembling two lenses, a plano-convex and a plano-concave, of glasses of about the same refractivity but widely different dispersive powers, thus introducing chromatic aberrations into the picture.

CHAPTER XII

SHUTTERS

127. Preliminary Remarks. Although in the earliest days of photography the word shutter was used to signify the cap of a lens, and then at a later date the different arrangements (flaps, etc.) worked directly by hand, the word is now used to describe any mechanism by means of which light can be allowed to pass through an aperture during a certain definite time.[1] Except for very special applications, the question of a special shutter never arose until the advent of very sensitive photographic emulsions and very large-aperture objectives, since it was unnecessary as long as exposures required to give a good image were of the order of a minute.

Certain shutters of very simple mechanism, the motive power of which is obtained from air compressed by squeezing a rubber bulb or by the pressure of a finger on a trigger, work automatically at each pressure without the necessity of any special preliminary operation (*Everset shutters*). But in the case of shutters controlled by springs, and these are the only ones which allow light to pass for a very short time, the driving springs must be *set* every time an exposure is to be made.

128. Different Positions for the Shutter. If we consider the luminous beam which, after passing through a lens, forms an image in the plane *PP*, we see at once that the cross-section of the beam *taken as a whole* is smallest at the diaphragm *DD* (this is actually the aperture of the diaphragm), and that on the other hand each beam, considered separately, has its minimum section in the actual plane of the sharp image.

The velocity of the moving parts of a shutter being limited according as these parts start from rest and stop as soon as the aperture is closed again (excepting some special types of shutter for aerial photography), it is obviously of importance, in considering very short exposures, to uncover *successively* the different beams where they have the least section, e.g. by placing an opaque screen pierced by a narrow slit which can sweep over the whole surface of the image, as near as possible to the image in the position indicated by (1) in Fig. 95.

[1] Note that it is customary to designate the time of admission of the light by the unsuitable word " speed."

In using such a *focal-plane shutter* we must distinguish between the *local time of exposure*, which is the duration of the admission of each of the beams,[1] and the *total time of exposure*. this being the time taken for the slit to move across the whole of the image (the direction of movement is generally chosen parallel to the short sides). During the total exposure the relative positions of the camera and the subject may change, and if this happens the different parts of the image will not correspond to one and the same phase of the movement. It will be seen in studying this type of shutter that the image deformations which result are generally negligible, except in cases of extremely rapid movement of the object or the camera. In such cases neither will any other of the usual types of shutters give a sharp image.

For exposures of one-hundredth of a second or more, it is generally better to allow the different beams used in the formation of the image to enter the camera simultaneously, and it is therefore better to place the shutter in the immediate neighbourhood of the diaphragm, as at (3), in such a way as to allow the construction of the most compact shutters. As the local exposure time is here the same as the total time, a sharp image will not be deformed, and the exposure received at each point of the sensitive film will be roughly proportional to the illumination at that point if there were no shutter.

For reasons of convenience (easy adaptation of a shutter to any lens and any camera without having it specially fitted, greatest liberty in the choice of mechanisms, which can thus be of extreme simplicity, etc.), the shutter is sometimes placed at other places than those indicated above, behind, or in front of the objective in one of the positions (2) or (4). In these positions the shutter suffers from the disadvantages of both the focal-plane shutter and the diaphragm shutter. The local exposure time is no longer equal to the total exposure, whence arises the possibility of the deformation of a sharp image (the risk of this, however, is considerably less than with the focal-plane shutter) and the risk

[1] The local exposure time generally varies from one edge of the image to the other, since the velocity of the shutter slit is scarcely ever uniform.

of inequality in the local exposure times (sometimes done purposely in photographing a landscape in order to decrease the exposure of the sky).

Since the size of the uncovering aperture should be considerably greater than the diaphragm, especially when the angle of view is large and the shutter is some distance from the lens, the exposure time for equal velocity of the moving parts of the shutter will be necessarily greater, and particularly the initial and final periods, during which the shutter is not completely open, become of considerable importance in regard to the efficiency of the shutter (§ 129), and the sharpness of the images. A shutter placed elsewhere than at the diaphragm should not open from the centre, since, whilst it is partly open it intercepts the oblique beams whilst allowing all or part of those only slightly inclined to the axis to pass through, thus exaggerating the differences of illumination between the centre and the edges of the image (§ 54). If, however, the shutter begins to open from one edge and closes when at the opposite edge (e.g. by the movement of an opaque screen containing a rectangular aperture), at the beginning and the end of exposure, the image will be formed solely by the portions of each beam traversing the diaphragm in the peripheral region. Since the rays which pass through the outer zones of a lens are always those which have the greatest aberrations, the image will necessarily lose a certain amount of its sharpness if the time during which the shutter is incompletely open represents an appreciable fraction of the total exposure time.

Very fortunately these different drawbacks only occur to any great extent when the shutter is at a considerable distance from the lens. Certain of these shutters working quite near the lens give satisfactory results when they are not required for shorter times than 1/25 second; they are quite suitable for portraits or landscape photography.

129. Efficiency of a Shutter. Except in the case of a shutter working in the plane of the image, a shutter always takes a certain time to reach its maximum aperture, after which it remains fully open until it begins, in a similar way, to close gradually. This characteristic will be understood by studying Fig. 96, which is traced from a cinematograph film and represents the complete action of a diaphragm shutter (P. G. Nutting, 1916). The time of exposure of each of the images is 1/30,000th second, the interval between two successive images corresponding to 1/1,000th second. When the shutter (quite a good one of its type) is set for an exposure of 1/100th second it takes about 4/1,000th second to open; it remains at its maximum aperture during another 4/1,000th second and takes a further 3/1,000th second to close, making a total exposure time of about 11/1,000th second.

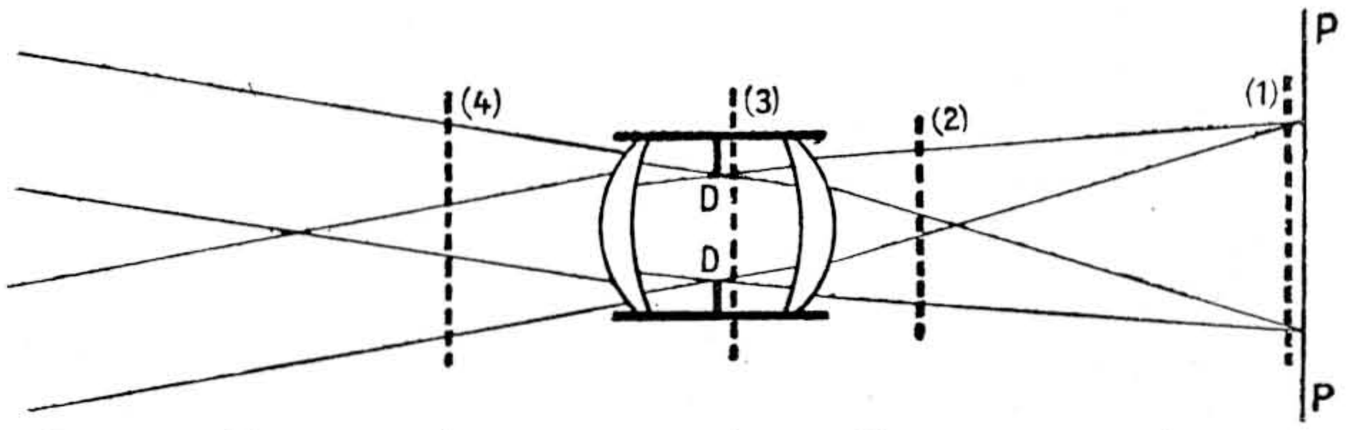

FIG. 95. POSITIONS (1, 2, 3, AND 4) FOR OPERATION OF SHUTTER

A moving object, brightly illuminated, at least over part of its visible surface, can act on the photographic emulsion during almost the total time that the shutter is working, say during 1/100th second. But the illumination received by the sensitive film will be very far from representing 1/100th of the exposure that it would receive during one second, supposing that the times taken for the actual opening and closing are negligible. Thus, in photographing a moving object, the disadvantage of an exposure of 1/100th second in giving blurring of the image is not entirely compensated by the full benefit of an exposure of this duration for the shadow details.

By a simple method we can determine with a sufficiently close approximation the quantity of light transmitted by a shutter during its complete working as represented above, relative to that which would be transmitted during the same time if the shutter were fully open. We trace on a card of uniform thickness on any suitable magnified scale the successive limits to the beam transmitted by the shutter, and after

cutting out each of the shapes so obtained such as those in Fig. 96, we can weigh the eleven pieces together and also the one piece representing the full aperture. Suppose it were found that the eleven separate pieces together weighed 4·66 grm. and that the single piece representing full aperture weighed 0·71 grm., then, since the weights may be considered as proportional to the surfaces, the ratio $4{\cdot}66/(0{\cdot}71 \times 11) = 0{\cdot}6$ measures the quantity of light passing through the shutter, taking as unity the quantity which would traverse it in the same time if the shutter were fully open the whole time.

The efficiency of a shutter is the ratio of the quantity of light effectively transmitted by the shutter during the local time of exposure to the quantity of light which would have passed through the full aperture of the lens in the same time. Or another way of expressing it is to say, that the efficiency is the ratio of the time which would be necessary to transmit through the full aperture the same quantity of light as is effective in the local exposure to the time of the local exposure itself.

As the local exposure time is generally limited to a maximum depending on the speed of the images of the moving objects included in the field, and is only just sufficient to obtain a photograph in correct tone values, a shutter should be considered as more nearly perfect the more nearly that its efficiency approaches unity, all other conditions being the same.

It should be noted that as far as we have considered, the efficiency of a shutter varies both with the exposure time and with the dimensions of the effective aperture. At the shortest exposures which can be given by some shutters, the section of the transmitted beam starts to decrease as soon as it has ceased increasing, being only momentarily at full aperture. On the other hand, at relatively long exposures the times taken by the shutter in opening and closing are very much the same as in very short exposures, the difference of time in the exposure being due almost entirely to the increased period at full aperture. When the diameter of the diaphragm is reduced, the section of each beam, in any plane whatever, is reduced proportionally, and, even supposing that the shutter does begin to close as soon as it has finished opening, it will still have transmitted the complete reduced beam during a certain definite time. Thus it can be seen that, except in the case of a shutter working in the plane of the image (for which the efficiency is unity), the efficiency of a shutter increases when the exposure is increased and when the working aperture of the lens is reduced. Thus it is obviously the minimum efficiency of a shutter which characterizes it best, since the question of efficiency is of special importance when the exposures are very short and are thus being made with the full aperture of the objective.

Under conditions of working of a shutter of which the movement is described by Fig. 96, the efficiency would be called 0·60, or, more generally, 60 per cent.

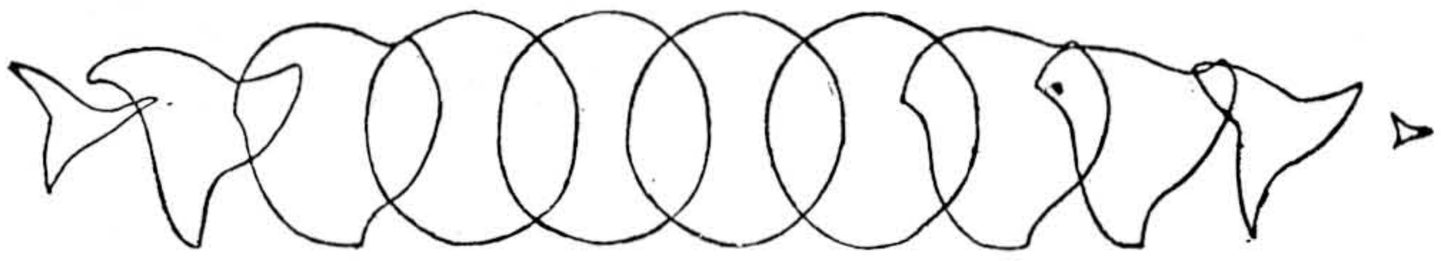

FIG. 96. OPENING AND CLOSING OF DIAPHRAGM SHUTTER

130. Desirable Characteristics of a Shutter. These are somewhat numerous, and are rarely found combined in a single instrument.

A shutter should act without appreciable lag the moment that it is released; it should work without appreciable vibration so as not to impair the sharpness of the image,[1] and without rebounding at the moment of closing (which would give a parasite image of the brightest parts of the subject). In cases where the lens is used for portraiture it is very advantageous that the shutter should work silently; it ought not to limit the useful field even when the lens is considerably out of centre, nor limit the effective aperture of the lens. It ought to work equally well when used in different positions; it should be light, compact, and strong;[2] its efficiency should be as great as possible. When used on an instrument in which the sensitive

[1] In order to cure this defect it has been suggested that the shutter should be mounted on a flexible shaft joining the camera to the lens, the latter being carried by a metal framework which connects it rigidly to the camera.

[2] It is specially desirable that the regulation of the exposure time can be effected after the shutter has been set, without risk of deranging the mechanism.

surface remains otherwise uncovered (such as magazine cameras, or studio cameras with repeating backs) it should not open during setting. Lastly, it ought to give a reasonable range of exposures which are very nearly constant and correctly stated.

This last condition is certainly one of those the non-fulfilment of which leads to most serious mistakes. No shutter gives constant exposures over a period of years, for even when not being used it is impossible to prevent the steel of the springs from undergoing changes,[1] but over a period of several days the exposure time should be the same at the same setting, and especially should this be the case when the shutter is used several times in succession, a characteristic, however, which does not always hold. Failure to fulfil this condition is particularly frequent in shutters in which the regulation of the exposure is done by a friction brake, like a shoe-brake of carriages, the effect of which is very variable with the temperature and the hygrometric state of the air. On the other hand, regulation by means of an air-brake gives sufficiently constant results, provided the compression cylinder is not worn or clogged with dust.

The numerical indication of the times of exposure corresponding to different settings of the shutter is very often far from the truth. It may be generally said that for times less than 1/5 second the times indicated are appreciably less than the real times. This, however, may be arranged purposely to allow for the fact that amateurs, even with exposure times greater than they think they are using, still take a large proportion of under-exposed negatives. In other cases there is no simple relation between the times given and the actual ones. With certain cheap shutters, times indicated as 1/50th and 1/100th second both correspond to the same actual times of about 1/25th second, whilst sometimes on the same shutter the exposure marked as the shortest is longer than one of the others indicated as relatively long. In the case of certain rare types of shutter where the times of operation are fairly correctly indicated (some latitude is obviously necessary in the adjustment in construction) for the shortest and longest exposures, the indications are often inexact in the neighbourhood of 1/25th second, since the variations of exposure may be relatively large for a very small variation in the adjustment.

Several good makers prefer to replace the graduation in actual exposure times by a series of numbered marks, at the same time indicating approximately the exposure corresponding to each of these numbers.

To cover usefully a given range of times[1] with the smallest number of different exposures, it is best to have a series of exposures in geometrical progression (preferably each one double the preceding one).

Exposures greater than a second are not generally made automatically, largely because for focussing it is necessary to keep the shutter open for some time. By moving an index on the outside of the shutter the coupling of the mechanism is changed, and the continuous working of the shutter becomes discontinuous; a first operation of the release opens the shutter, which remains open until the release is again pressed.

According as to whether the release must be kept pressed down during the whole exposure, or whether it can be released as soon as the shutter is opened and be pressed again for closing, we say that the shutter gives *bulb exposures* or *time exposures*. On many shutters the positions of the index corresponding respectively to these two methods of working are arbitrarily indicated by the letters B and T, the first letters of the words *bulb* and *time*. On others which only allow time exposures the positions are denoted by T and I, standing for *time* and *instantaneous*, this latter word being used to denote all exposures less than one-tenth of a second.[2]

131. Summarized Description of Some Types of Shutter. The number of different types of shutter which exists is far too great for them to be described here; it will, however, be possible to indicate the chief peculiarities of some characteristic types, chosen for preference from those most commonly used.

As far as possible in the descriptions which

[1] A shutter should never be kept set in the intervals between use. If the regulation of the speed is effected by the tension of the driving springs, they should never be left stretched longer than is necessary. Care should be taken never to grease any part of a shutter, especially the brakes.

[1] It would be a very good thing if makers of shutters indicated clearly in their catalogues the dimensions of each instrument; this would allow one to choose from a series the one which suited a given lens. A number of catalogues denote the different shutters of a given series by the size of the image which is supposed to correspond to them, a piece of information as valuable as is the captain's age in a nautical calculation!

[2] On German shutters the letters B.T.I. are replaced respectively by O (Offen), Z (Zeit), and M (Moment).

follow, the historical order will be taken, so that the reader may be able to follow the evolution of the shutter, and to compare it with the progress of photographic technique.

132. Simple Drop Shutter. In its simplest form, the guillotine, or drop, consists of an opaque screen (having a cut-out portion at least

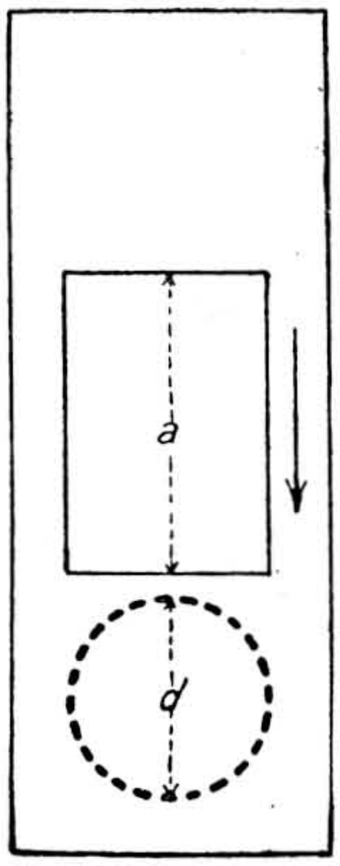

FIG. 97. THE SIMPLE DROP SHUTTER

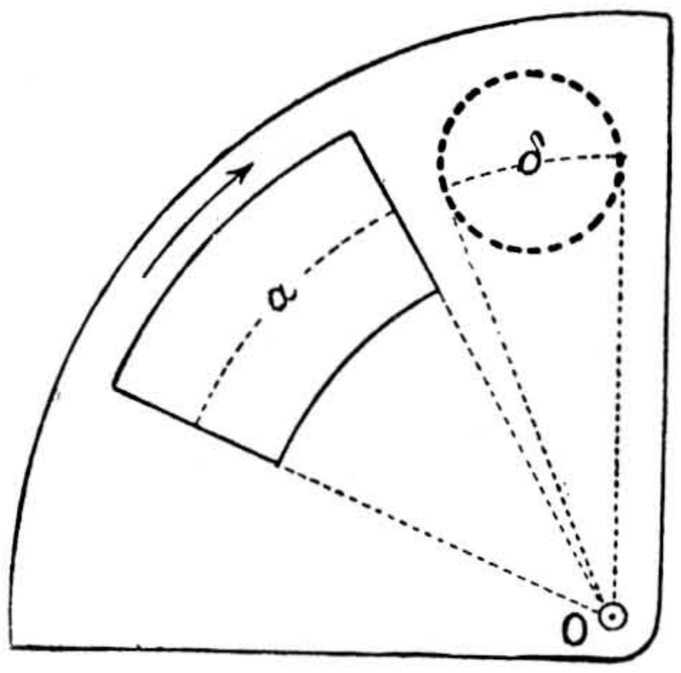

FIG. 98. ROTARY SHUTTER

equal in size to that of the aperture to be uncovered), falling under its own weight or helped by some kind of spring which causes it to pass rapidly before the lens (Fig. 97). Such an arrangement was used in 1845 by Fizeau and Foucault for photographing the sun, but it was about 1855, after the introduction of the wet collodion process, that it was generally employed, first in the form of a very clumsy arrangement fixed to the lens hood, the velocity of fall becoming less according as the slope of the frame in which it was mounted was less. It afterwards appeared in the form of a metal plate passing between the lenses of the objective and helped by an elastic band (Jamin, 1862).

Between these times (1858) the real guillotine or rectangular guillotine had been replaced by a circular one (Fig. 98), much less clumsy, in which the old movement (which, geometrically speaking, is a rotation around an axis at an infinite distance away) was replaced by a rotation around an axis situated a short distance from the circumference of the mounting, the cut-out sector being used either in front of the lens hood or in the immediate neighbourhood of the diaphragm. The opaque screen may, however, be reduced to a single opaque sector, making a complete revolution each time.

The opening was originally a circle of the same diameter as the aperture to be uncovered, but in 1880 Joubin showed the advantage of having an opening of which the edges actually responsible for the opening and closing were straight.

The efficiency of the guillotine type of shutter for different shapes of the opening was studied by J. Demarçay (1891), whose conclusions are given below.

In the case of guillotines having a rectilinear movement and openings of one of the forms *A*, *B*, or *C* (Fig. 99), the efficiency for different relative proportions of the height *a* of the opening to the diameter *d* of the aperture will be expressed by the values given in the following table, assuming the screen in the plane of the diaphragm, and given a uniform movement.

Relation between *a* and *d*	Form of opening		
	A	B	C
$a = d$	0·50	0·42	0·57
$a = 2d$	0·66	0·62	0·71
$a = 3d$	0·75	0·71	0·78
$a = 4d$	0·80	0·77	0·83
$a = nd$	$\frac{n}{n+1}$	$\frac{n-0{\cdot}15}{n+1}$	$\frac{n+0{\cdot}14}{n+1}$

The opening with convex edges (form *C*) gives a greater efficiency, but gives predominance to the influence of the marginal rays; the

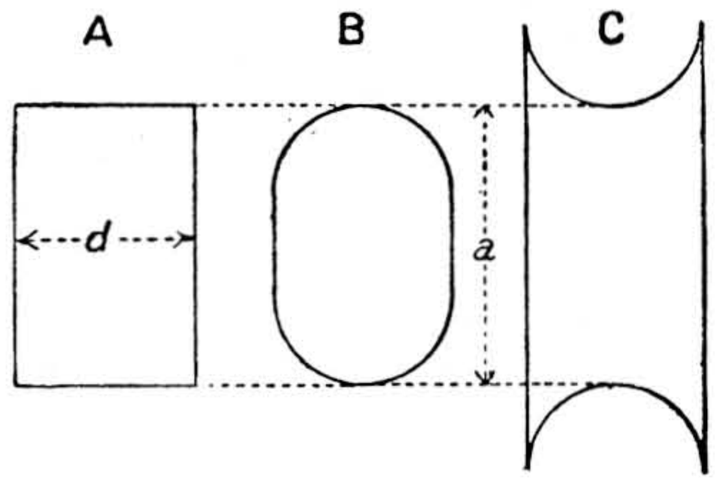

FIG. 99. EFFICIENCY OF DROP SHUTTERS

opening with rectilinear sides is preferable. Considering specially this latter case, it is easy to trace the effect of the length of the opening on the efficiency. In Fig. 100, where distances measured from *A* along the line *AD* are proportional to the time from the instant when the aperture begins to be uncovered, and where distances along *AB* are proportional to the

areas of the aperture uncovered, the curve *AGH* corresponds with the opening period and *JKD* with the closing period of the aperture, whilst the straight line *HJ* gives the time during which the aperture is fully uncovered. The efficiency is equal to the ratio of the total shaded areas to the rectangle *ABCD*. In the case of a uniform movement the curves *AGH* and *JKD* are symmetrical about their mid-points *G* and *K*. The area of each of the curved triangles *AHL*

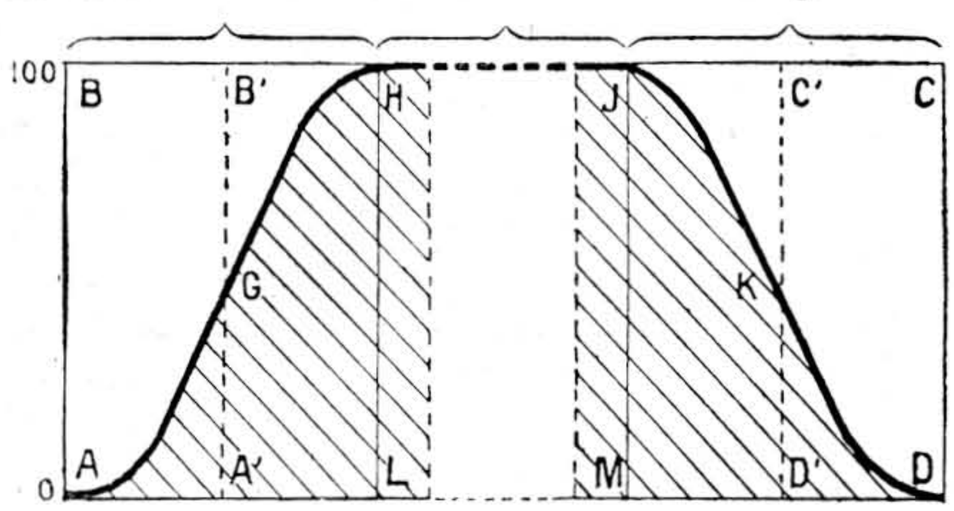

FIG. 100. EFFICIENCY, AND LENGTH OF SHUTTER APERTURE

and *MJD* is therefore equal to that of the rectangles *A'B'HL* and *MJC'D'*. The efficiency is thus the ratio of the areas of the rectangles *A'B'C'D'* and *ABCD*. It will be readily seen that the efficiency becomes greater as the distance *LM* (determining the duration of full aperture) increases.

If, as in almost all shutters of this type, the velocity is not uniform, the efficiency decreases as the difference between the extreme velocities gets greater. In the case of a movement having a uniform acceleration (a shutter falling freely), he values of the efficiencies of a drop shutter with rectilinear edges fall respectively to 0·38 for $a = d$, and to 0·49 for $a = 2d$.

The considerable increase in the efficiency which is brought about by increasing the length of the opening is unfortunately accompanied by a still more rapid increase in the time of exposure, since the actual velocity of the shutter cannot be made very much greater than about 2 metres a second.

These numerical values hold also in the case of guillotine shutters having a rotating movement about a centre coinciding with the apex of the angle of the sector opening.[1] In all other cases the efficiency increases as the apex is nearer to the diaphragm and the pivot farther away from it.

The rotating guillotine shutters of Lancaster (Fig. 101) and Bertsch (Fig. 102), with efficiencies of 0·50 and 0·70 were used considerably at one time, but they gave exposure times much longer than those usually required in practice.

There should also be included in this category rectilinear or rotating guillotine shutters in which the moving part returns to its original position at the end of the exposure. If this type of shutter is used in front of, or behind, the lens, it gives one region of the plate a longer exposure than another. This fact has been made use of in landscape photography, the shutter being placed on the lens hood and opening from the bottom under the action of compressed air from a rubber bulb, and falling again under its own weight.

133. Roller-blind Shutters. A variation of the drop or guillotine shutter is the roller-blind shutter, which is often used in a great number of portable cameras. The shutter consists of a flexible blind wound on rollers at each side of the aperture (Fig. 103). This shutter, the use of which appears to have been first suggested by Relandin in 1855, was developed to its present

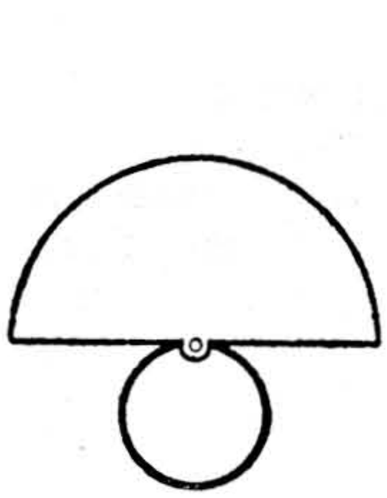

FIG. 101 LANCASTER ROTARY SHUTTER

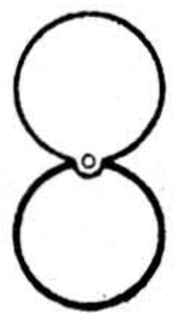

FIG. 102 BERTSCH ROTARY SHUTTER

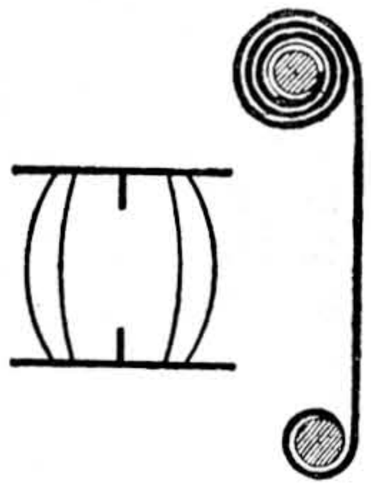

FIG. 103 ROLLER-BLIND SHUTTER

form by Kershaw. It is always used either in front or behind the lens, the latter position being more convenient and one which facilitates changing the lens without changing the shutter.

A perfectly opaque blind[1] of rubberized cloth is made of two bands in line with one another, and joined at their edges by bands in such a way as to leave between them an opening

[1] The efficiency of guillotine shutters, especially those having a rotating movement and the opening in which cannot be appreciably increased without taking up too much space, may be made greater by an arrangement of brakes acting on the shutter only during the time that the lens is completely uncovered.

[1] When, after much use or because of an accident, a hole appears in the blind, this may be mended by sticking on a piece of the same cloth by means of rubber solution; too many patches would prevent the blind from running easily, and in that case it is better to fit a new one.

the height of which is usually one and a half times its width. This blind, which may be regarded as a single one with central opening, is wound at its lower edge on a roller containing a spring inside. To set the shutter the blind is wound on to the upper roller, either by pulling a small cord[1] which is wound round a grooved pulley forming part of the roller, or by means of a small key projecting laterally from the roller.

The tension of the driving spring may be changed by means of a milled head situated at the lower part.[2] When this head is turned a dial is engaged on which is indicated approximately the corresponding time of exposure (for a shutter of about $2\frac{1}{2}$ in. opening. the exposures usually vary from 1/15th to 1/20th second, the speed scale indicating exposures spaced from 1/10th to 1/50th second). The spring should never be left in tension when the camera is not being used. In order to release it, lower the spring catch, at the same time braking the milled winding pinion with the fingers, so as to prevent the spring from running down too violently.

A side lever can be moved to one of two positions, one corresponding to a continuous unwinding of the blind. At its other position the blind is stopped halfway during the whole time that pressure is maintained on the shutter release.

Several of this type of shutter have been fitted with an auxiliary blind used to cover the aperture while the main blind is being set, but this is not generally done.

The efficiency of this shutter is independent of the degree of tension of the spring and is the same as that already given for the straight-edged drop shutter,[3] allowing for the fact that the motion is not uniform. This efficiency will be related to the local exposure time, the diameter to be considered being that of the effective aperture of the lens when the shutter is placed in front of the lens, or a diameter slightly less than that of the diaphragm when it is placed behind. The efficiency is slightly greater in this latter position.

134. Modern Types of Guillotine Shutters. Shutters embodying the principle of the guillotine shutter with rectilinear movement are used on many types of hand cameras, but in order that they shall have a reasonable efficiency and

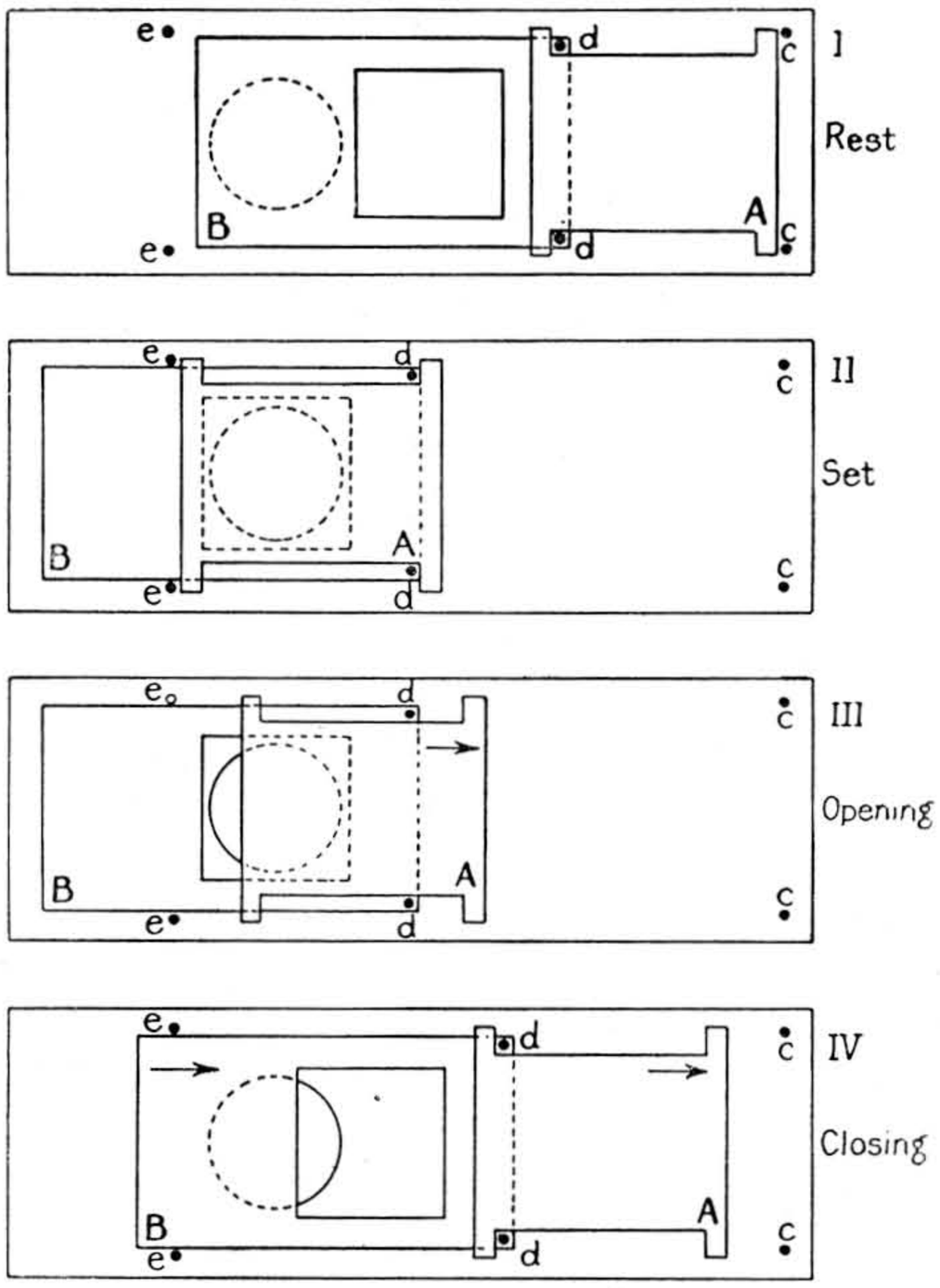

FIG. 104. ACTION OF GUILLOTINE SHUTTER

at the same time be fairly compact, the guillotine is formed of two thin steel plates one of which covers the lens before, and the other after, the exposure. The time between the first contact of the first plate and the second contact of the second one with the aperture to be uncovered corresponds with the time of passage of the opening in a shutter of the simple guillotine type. For long exposures, the two plates are worked independently; for very short or instantaneous exposures the second plate is automatically released by the first one on its arrival at the end of its travel, or the first plate acts on an intermediate member which allows the second plate to move only after a predetermined time. When setting this type of

[1] Shutters which are fitted with a setting cord may be made slower in action by attaching a weight to the cord.

[2] It has been shown that for certain shutters of this type the linear velocity of the blind, at maximum spring tension, may become as much as 5 metres per second (measurements made at the National Physical Laboratory, T. Smith, 1911).

[3] In order to measure the height of the opening, the shutter may be set at half way, a band of paper stuck on the upper edge of the opening, and the level of the edge marked on the paper. The shutter and the paper may then be turned together until the lower edge of the opening appears, which is again marked on the paper. The blind is then slowly released so that the paper shall not be torn before the distance between the two lines has been measured on it.

shutter, the two plates either move in such a way that the lens is always covered, or act in conjunction with an auxiliary plate, which, having covered the lens during setting of the shutter, returns to its original position and takes no further part in the shutter's normal working.

Fig. 104 shows diagrammatically how such a shutter works (the driving springs, ratchets, and the shutter release not being shown). In the position of rest (position *I*), the plate *A* rests against the stops *cc* and engages, by means of the pins *dd*, the plate *B*, the solid part of which covers the aperture. To set the shutter, plate *A* is drawn towards the left, and in so doing covers first of all the opening in *B*, and then drags *B* with it until it is stopped from going

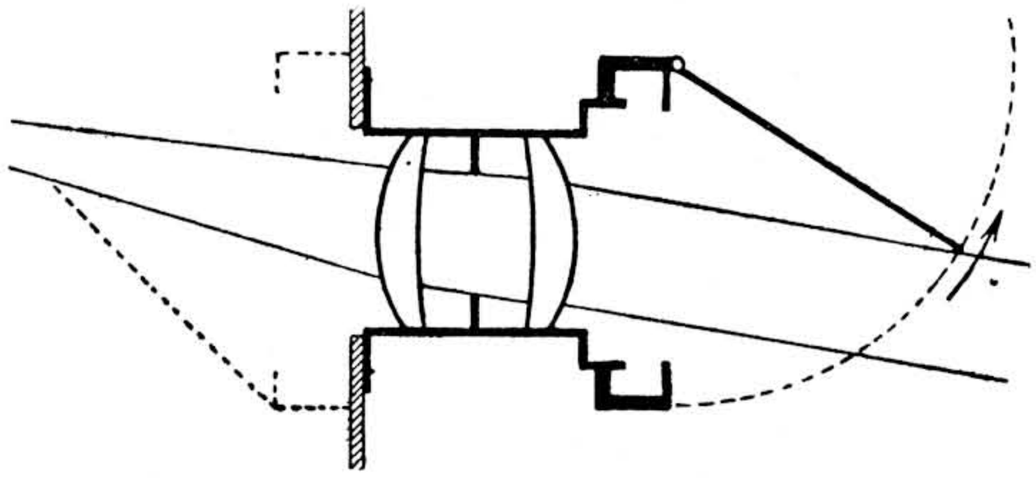

FIG. 105. GUERRY SINGLE-FLAP SHUTTER

farther by the studs *ee* (position II). The release sets *A* free, so that under the force of the driving spring it moves to the right and in so doing uncovers the aperture (position III). After it has passed completely over the aperture and the opening in plate *B*, it engages the latter and pulls it over so as to cover the aperture again (position IV). The greater the length of the notches in which the stops *dd* slide in *A* relative to the diameter of the aperture, the greater is the efficiency of the shutter.

135. Flap Shutters. After different types of flap shutters worked directly by hand had been for a long time in use, J. W. T. Cadett, in 1878, made the first model of such a shutter which was raised by a pneumatic bellows. This very clumsy piece of apparatus was fixed to the lens hood. A much less clumsy model was made by C. Guerry in 1880 (Fig. 105), and they are still being made for use by portrait photographers. To Guerry also is due the excellent idea of putting this shutter inside the camera[1] so that in portraiture the sitter may not realize the exact moment when the exposure is made. The flap, which is extremely light, is covered with black velvet, and is fixed to the bottom of a box which is itself lined with velvet in such a way as to be light-tight. The shutter opens by pressing on a pneumatic bulb and remains open as long as the bulb is pressed. For long exposures, in order to avoid maintaining the pressure continually, a tap which is placed on the tube joining the bulb to the shutter may be closed.

It will be seen from the drawing that the foreground will be exposed longer than those parts of the subject which are situated at a height greater than that of the camera. This may be an advantage in landscape photography so long as it is not necessary to give exposures less than one-third of a second, which is the minimum time which this type of shutter can give.

If we represent by unity the exposure for beams which strike the top edge of the plate, the exposures on the axis and at the lower edge of the plate are respectively 0·23 and 0·15, provided that the flap re-descends immediately it has uncovered all the useful field. Since the efficiencies in these three regions are respectively 92 per cent, 83 per cent, and 50 per cent, the illuminations will be 92 per cent, 19 per cent, and 7·5 per cent of what they would have been during the total time of exposure if no shutter were used (H. Wurtz, 1906). This disproportion is considerably less if the shutter is kept fully open for some time; if, for example, the total time taken in the actual opening and closing is one-third of a second and the duration of full aperture is one second, the relative values of the illuminations become 98 per cent, 80 per cent, and 66 per cent.

Joubert suggested in 1880 the use of a second flap connected with the first and remaining always parallel to it. By means of this *double-flap* shutter (Fig. 106) considerably shorter exposures may be given, but the illumination is now a maximum in the centre of the plate, where it is about 40 per cent greater than at the upper and lower edges. In the form in which it is often used by numerous portrait photographers, the second flap can be disconnected so that the shutter can be used with the single flap only.

Mention must also be made of a type of shutter which combines the simple flap and the roller-blind shutter in one (Tauveron, 1919), the latter being automatically released at the

[1] Shutters for use inside the camera in the position indicated by the dotted lines should be specially provided with slightly stronger springs. They are fitted with a metal connecting piece, which passes through the lens board and joins the release tube to the shutter.

moment when the flap gets to its top point. In this way the two drawbacks of the roller-blind shutter in portraiture are obviated, since, on the one hand, the flap prevents the lens being uncovered whilst the blind is being set, and on the other hand, the noise which the roller-blind makes is only heard whilst it is closing, and it is then too late to have any effect on the sitter.

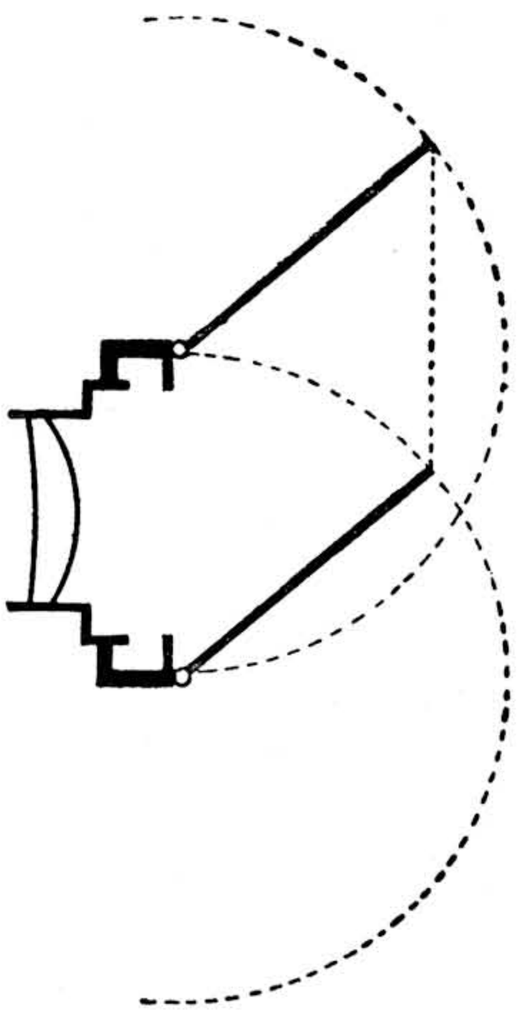

FIG. 106. DOUBLE-FLAP SHUTTER

136. Various Other Types Derived from the Flap Shutter. In connection with this type of shutter there are others which may be mentioned designed chiefly for use behind the lens, and of which only one appears to have survived.

The *multi-flap shutter*, shown diagrammatically in cross-section in Fig. 107, consists of a great number of light flaps or plates pivoted around horizontal axes and just overlapping one another in the two extreme positions. The chief drawback of such a device is that the light emerging from the lens is never completely transmitted. The flaps, being always parallel to one another, allow the central beams to pass almost completely when they are parallel to the optical axis, but they then intercept an appreciable part of the oblique beams. This is the reason why this shutter has an efficiency not more than about 33 per cent. Although with one shutter of this type (Krauss, 1894) exposures as short as 1/400th second could be made, it was nevertheless soon abandoned.[1]

Two other types of shutter may be mentioned, viz. the rotating plate, placed between the lenses and turning on one of its diameters, a device which resulted in the outer parts of the lens being used almost exclusively, and the "plug" shutter, something like the plug of a tap, with which the central portion of the lens was chiefly used. Both are far too cumbersome to be placed between the lenses of modern objectives.

[1] The use of this type of shutter, with certain modifications, has been again suggested for aerial photography. Especially has use been made of leaves arranged radially, thus giving the advantage of perfect symmetry in all directions.

Lastly there is the *bellows shutter*, represented diagrammatically in Fig. 108, and used by many portrait photographers. Two bellows of black opaque cloth are mounted on a light metal frame, somewhat in the form of Japanese lanterns used for illumination. In the position of rest these bellows form a hemisphere, which, when operated by a pneumatic piston, opens from its vertical plane of symmetry, thus having the advantage that, from the point of view of the exposure, the region round which it opens, viz. the zone enclosing the vertical axis of the image, is almost invariably that occupied by the subject. Obviously with this shutter extremely short exposures are impossible, but these have only very rarely to be used in the studio.

137. Double-drop Shutters. Although in principle a double-drop shutter, opening and closing from the centre (Mann, 1862), is for use in the diaphragm, numerous models have been made for use before or behind the objective. One of the best of these, although it was first designed years ago (L. R. Decaux, 1893), is frequently used behind the objective (it may, however, also be used as a diaphragm shutter) without any difficulty if of sufficiently large aperture. This is due to the fact that the time during which full light is being admitted nearly always represents more than half the total time of operation of the shutter.[1]

In this shutter, which is represented closed and open in Figs. 109 and 110, the two plates

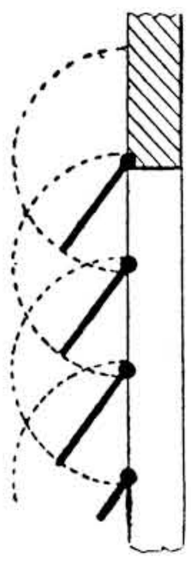

FIG. 107. MULTIPLE-FLAP SHUTTER

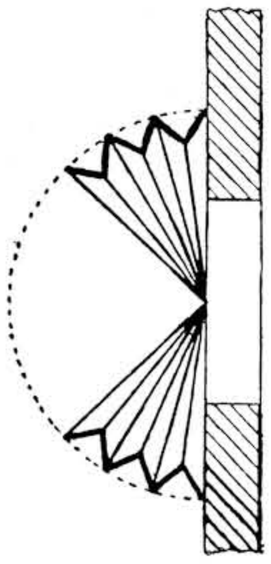

FIG. 108. BELLOWS SHUTTER

V_1 and V_2, instead of having rectilinear movement, are guided by horizontal grooves a_1b_1 and a_2b_2, and joined by a long member to the end of the arm B_1B_2, movable around the pivot

[1] The following description and the figures relating to it are taken from a general survey of shutters published in 1906 and 1907 by E. Wallon in *La Revue de Photographie*.

M and brought into its position of rest by the spring r. The driving spring R is coiled round the piston rod in the body of the pump P. This pump is full of air, which the piston, under pressure of the spring R, compresses to the end of the cylinder, where it escapes through very

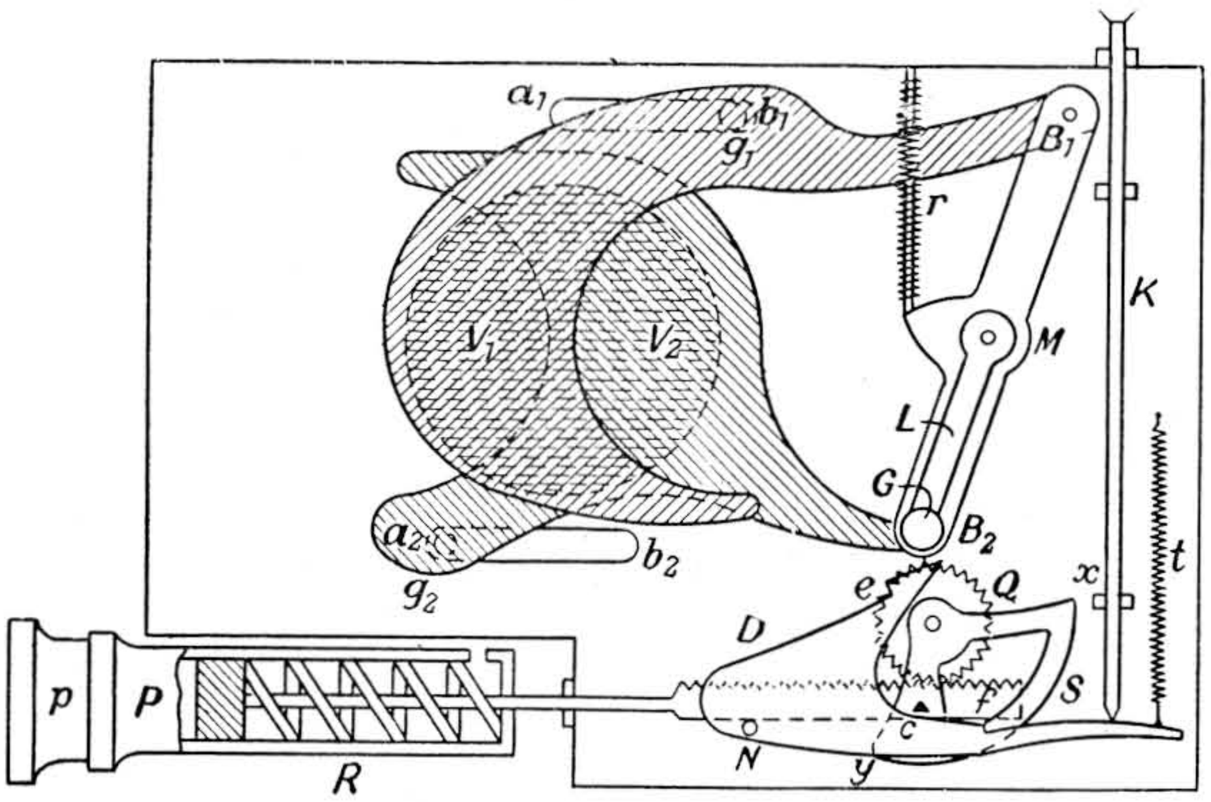

FIG. 109. DOUBLE-PLATE SHUTTER—SET

small holes, the exact size of which may be regulated at will by rotation of the button p, which has marked on it a series of numbers corresponding to different exposures.

An extension of the piston rod carries a rack which engages in the toothed wheel Q, which is directly connected with the setting lever, and which is fixed to the cam S which forms the vital part in the mechanism. When the key for setting the shutter is pressed, the rack moves towards the right, thus compressing the driving spring and turning the sector S in the opposite way to the hands of a clock. This presses by the tip x on the pin G of the lever L, which is joined at M on the arm B_1B_2, and which is slightly displaced from its position of rest sufficiently for the sector to pass by, the lever returning quickly to its normal position, the pin G being thenceforth pressed against the sector. The triangular pin C of the cam is then caught in the notch e of the bolt D, which pivots round N and is acted on by the spring t, the shutter thus being set without any movement of the plates V.

If the bolt D is lowered by pressing on the rod K, the pin c is set free and on being released the spring impresses on the cam a rotation in the opposite direction to that previously described. The lever L is pushed towards the right, but in this direction it engages the arm B_1B_2, and consequently moves the plates of the shutter, the aperture of which is fully opened when the cam has turned through about 90°, the pin G being pressed against the cam. Before this pin is set free, thus allowing the shutter to close, the whole of the sector S shown by the arc xy must pass under it. The time this takes to pass is the time of full aperture, after which the plates close under the influence of the spring r. The air brake does not act appreciably during the actual opening or closing of the shutter, the air not being sufficiently compressed to have any effect on the driving spring R. In fact, the action of the brake only affects the duration of the exposure at full aperture.

For very long "time" exposures, the holes in p through which the air escapes are almost completely closed. The movement of the cam is then very slow when the pin G approaches the end x of the sector S, and if there is no longer any pressure on the rod K, the pin c is stopped by the notch f before the plates close; a second pressure on K releases c and the shutter closes.

The times of opening and shutting are about 1/400th second; the shortest time at full aperture

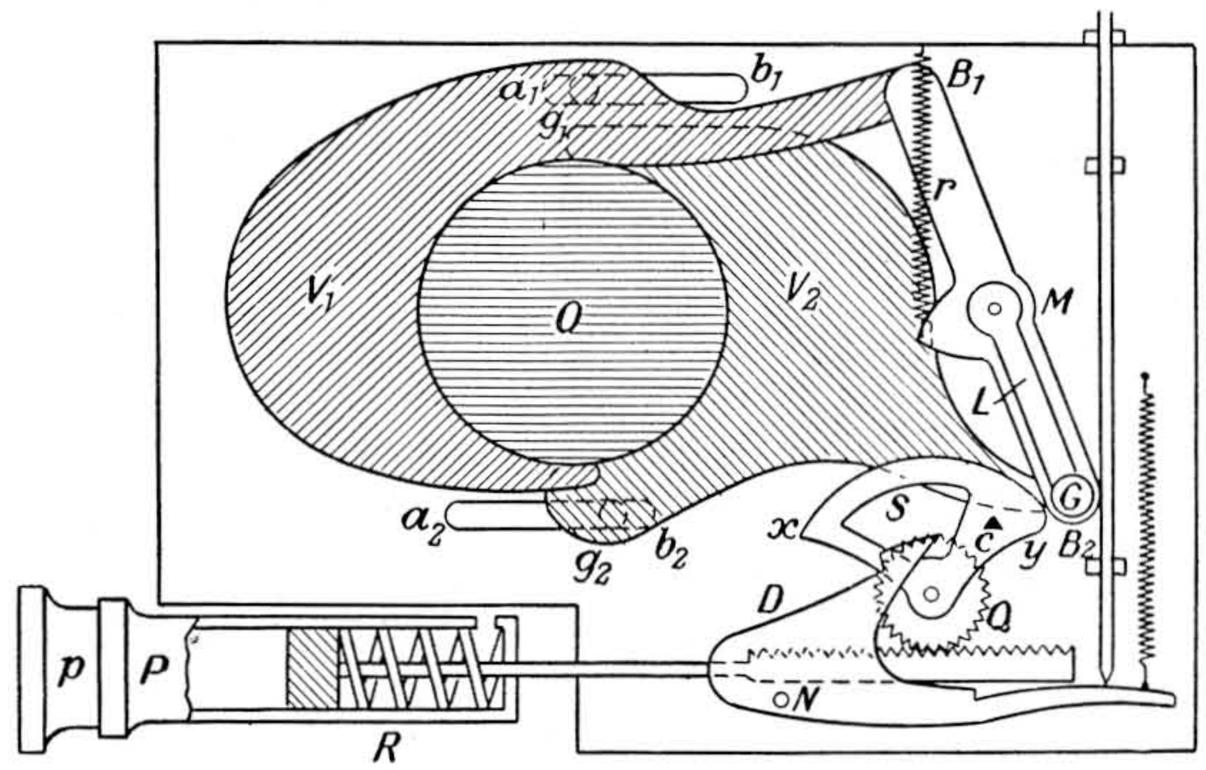

FIG. 110. DOUBLE-PLATE SHUTTER—OPEN

is also about the same, so that the shortest total exposure is about 1/120th second, with an efficiency greater than 60 per cent. This rises to about 80 per cent for an exposure of 1/50th second, and increases continually with the exposure, as is the case with the majority of shutters other than focal-plane.

138. Diaphragm Shutters. The first shutter with several pivoted plates opening like the leaves of an iris diaphragm and operated simultaneously by an internal ring concentric with the diaphragm appears to have been made in 1887 by Beauchamp and Dallmeyer.

Some of these shutters, with a large number of plates (e.g. 10 in the *Volute* and the *X-Excello*), are actually iris diaphragms, the leaves opening just sufficiently to form the boundary of the desired aperture as indicated on a scale, during a given time, as shown by a second scale. The efficiency of these shutters is not particularly good, viz. a maximum of 50 per cent for a uniform movement of the leaves, but this can be slightly increased by choosing a suitable movement. Also, the construction of these shutters is somewhat complicated, which usually results in a higher price and a more fragile construction than in shutters having an iris which is quite separate from the shutter leaves.

Generally the number of leaves is three or four, but sometimes may be two or five. For a suitable form of leaf the external diameter of the casing of the shutter should, for a given aperture, be smaller as the number of leaves is made greater (Lan Davis, 1911), although manufacturers have not always made the best use of this fact. The table below gives the theoretical diameter of the casing for different numbers of laminae, the diameter of the aperture being taken as unity.

Number of leaves .	2 or 3	4	5	6	8	10	20	30
Diameter of casing .	2	1·93	1·83	1·73	1·59	1·49	1·26	1·17

Figs. 111 to 116 show the theoretical forms of leaves corresponding with shutters fitted with 2, 3, or 4 leaves, according as to whether these pivot around points (marked by small circles) situated on the edge of the aperture or on the edge of the casing.

This advantage of shutters having several leaves is, however, to a great extent counterbalanced by the fact that, for a given method of construction and the same law of movement, the efficiency diminishes as the number of leaves increases.[1] The table given below gives for different numbers of leaves (J. Demarçay, 1905) the efficiencies calculated for the case in which, instead of turning round pivots, each one slides in a direction parallel to a radius, the assumption being made, in agreement with general practice for the shortest exposures, that no brake is used.

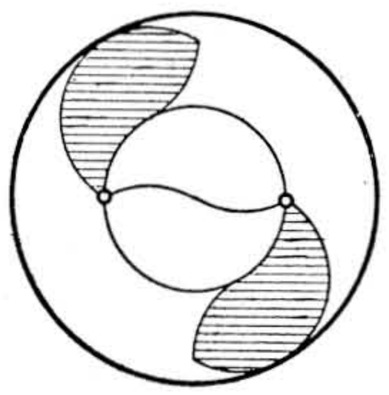

FIG. 111

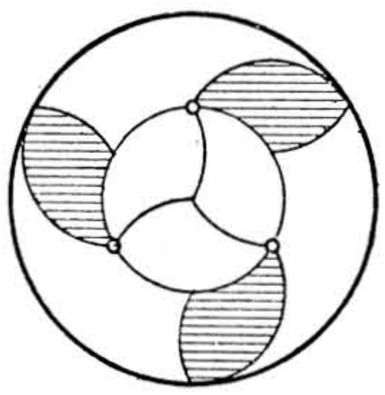

FIG. 113

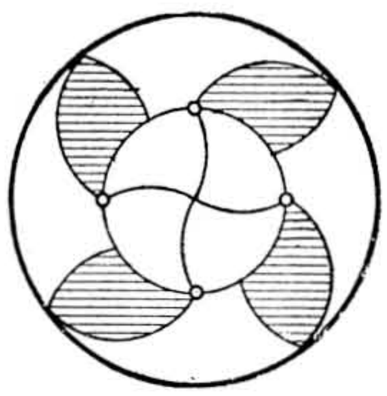

FIG. 115

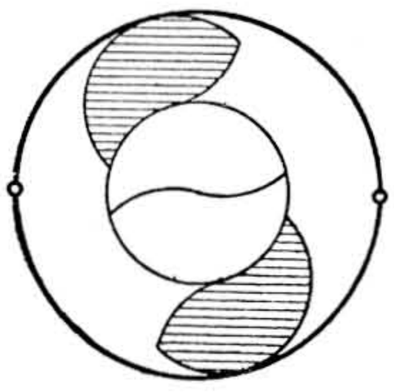

FIG. 112

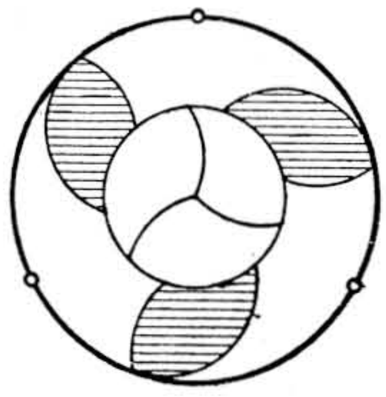

FIG. 114

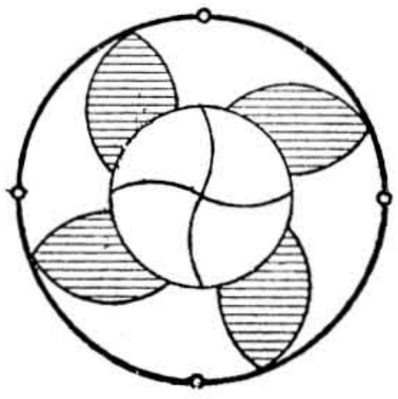

FIG. 116

THEORETICAL FORMS OF TWO-, THREE-, AND FOUR-LEAF DIAPHRAGM SHUTTERS

Number of leaves . . .	2	3	4	6	∞
Efficiency	0·424	0·367	0·351	0·341	0·333

Almost all shutters of this type are fitted with air brakes for regulating the exposure, the brake only being used during the period of full aperture

[1] This law would not hold for leaves in the form of sectors dividing the diaphragm into equal parts and opening by a translatory movement of each of the sectors in a direction along the length of its centre line, or by rotation around a pivot at some distance away. Such arrangements, however, present considerable difficulties in practice.

so as to increase the efficiency at longer exposures.

With all shutters, and especially with those of this type, the minimum exposure increases very rapidly with the diameter of the aperture,[1] but at the same time the efficiency tends to diminish because the exposure can only be reduced by a change in the time of full aperture.[2]

The results of numerous tests carried out at the National Physical Laboratory (T. Smith, 1911) on this type of shutter have shown in some exceptional cases exposures of 1/340th second to have an efficiency of 46 per cent. Generally, however, the minimum exposure time is nearer 1/200th second with an efficiency of about 54 per cent, which rises for longer exposures and becomes practically equal to 100 per cent when the exposure is of the order of 1 second. The relative values of the extreme exposures which are automatically controllable by the shutter often exceeds 200 to 1. On shutters, the time scale of which can be assumed to be accurate, the errors are of the order of 15 per cent, but on some types the error is considerably greater than 50 per cent.

For some years several makers have supplied shutters with a delayed action release. An interval, either constant or adjustable within certain limits, elapses between the pressure on the shutter release and the action of the shutter.

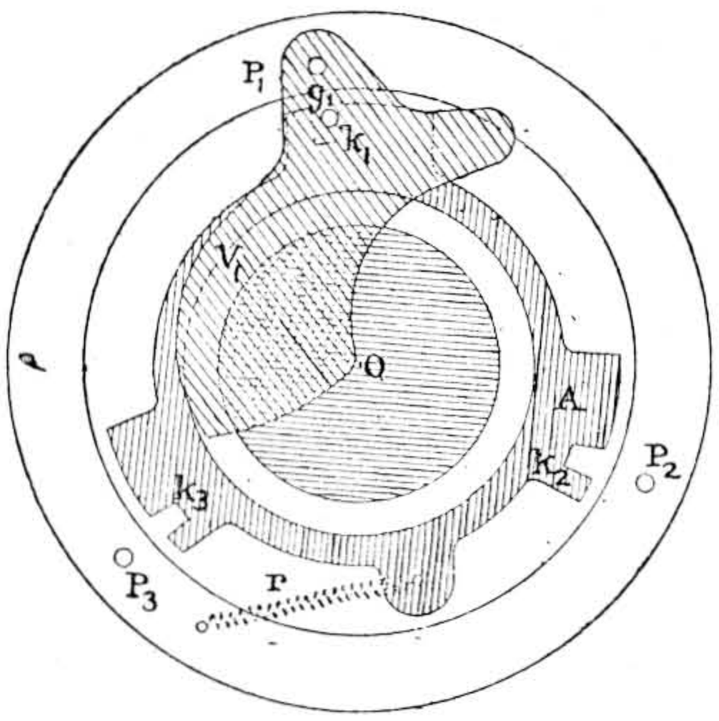

FIG. 117. COMPOUND SHUTTER (DECKEL), CLOSED

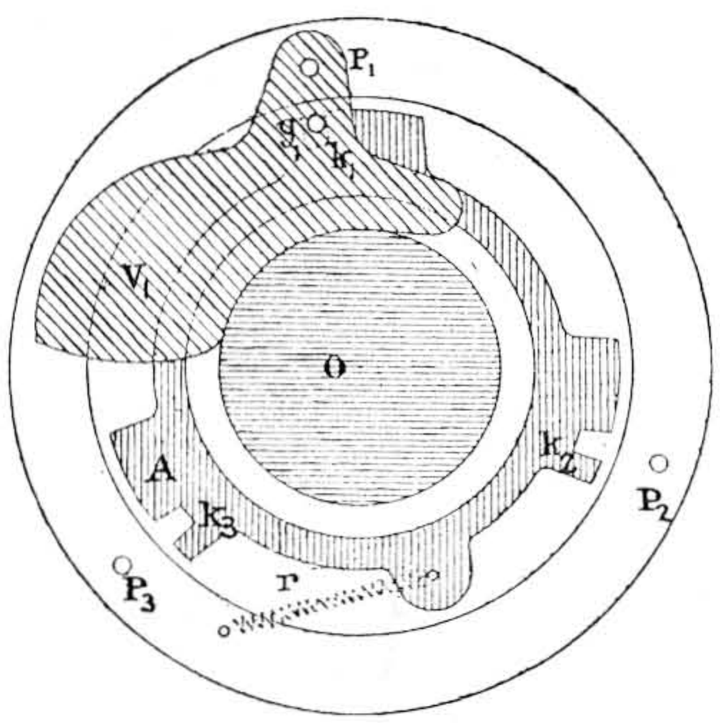

FIG. 118. COMPOUND SHUTTER, OPEN

139. As an example of this type of instrument we will consider the *Compound* shutter (F. Deckel, 1905) having three or four leaves according to the diameter of the aperture. This is represented diagrammatically in Figs. 117 and 118 (E. Wallon), for the case of a three-leaf shutter, one leaf only being shown to avoid complicating the figure. The leaves V pivot round the points P in a fixed ring and are operated by the pins g engaging in the radial notches k of the movable ring A. It will be seen that the movement of the leaves from the closed to the open position corresponds with a very small rotation of the ring A.

The ring A may be controlled by two different methods; either by direct action of the trigger release and without previous setting, for "time" and "bulb" exposures and relatively short exposures of about $\frac{1}{5}$th second with very low efficiency, or by using, after setting, a driving spring and an air brake, the only rôle of the release then being to set free the pieces which were locked in setting the shutter.

The movement of the lever to set the shutter engages a spur which is integral with the ring A in an arm which, from the moment of release, is connected with the driving spring, the setting being effected without any movement of the leaves, so that there is no danger of the aperture being uncovered. At the moment of release the ring A starts to rotate and continues to do so until full aperture is reached. The air brake now comes into play and prolongs more or less the time of full aperture until the spur in the

[1] Considering shutters of the same type and different diameters d working in the same time, and supposing that the thicknesses are not increased, the energy absorbed, $\frac{1}{2}mv^2$, varies proportionally to d^4, since m is proportional to d^2 and v to d. Therefore mechanical damage would occur in a very large shutter which opens and shuts in the same time as a small one.

[2] For aerial photography diaphragm shutters have been made giving exposures of the order of 1/200th second with an efficiency of about 80 per cent and an aperture of about 9 cm. in diameter. These shutters are very bulky and are made of a certain number of discs with cut-out sectors, and driven by an electric motor with uniform velocities respectively proportional to certain numbers having no common divider. The different sector openings thus coincide periodically on the optical axis at intervals sufficiently long for an auxiliary shutter, which may work relatively slowly and have poor efficiency, to be released at any desired moment, remaining open long enough for the coincidence of all the openings to occur once in the discs of the principal shutter. It is obvious that such arrangements are only applicable in such cases where the camera is permanently fixed, as in an aeroplane, or a ship, etc.

ring A frees itself from the arm to which it was previously fixed, the leaves then closing under the pull of the spring.

The brake consists of a cylinder closed at its two ends and fitted with a piston having a narrow slot in it communicating with the two ends of the cylinder. The displacement of the

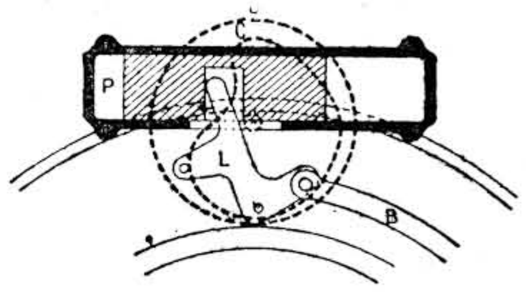

FIG. 119. SPEED ADJUSTMENT OF COMPOUND SHUTTER

piston compresses the air on one side and rarefies it on the other. The resistance to the movement of the piston depends on its original position and has a minimum value when the two compartments at the ends of the cylinder are equal. The variation of exposure is controlled by displacement of the piston P (Fig. 119) before the shutter is released. This is effected by rotation of the disc D, which is graduated in exposures (from 1 second to 1/250th second), and which engages the cam C moving, to a greater or less extent, the bent lever L, one end of which is fixed in the piston through a longitudinal slot in the cylinder, and the other, by means of the curved arm B, to a drum containing the driving spring.

140. Focal-plane Shutters. The focal-plane shutter, which need not necessarily work in the focal plane, is a drop shutter having a flexible blind consisting of an opaque fabric or of an assembly of metal slats which works in a plane parallel to the emulsion film, and, at least in principle, at a very short distance from it. The important feature of this shutter is that it can be used with a very narrow slit, thus giving a very short local exposure with almost maximum efficiency if the slit passes very close to the image (which it unfortunately seldom does). At the same time, the image may be deformed, the deformations becoming greater as the velocity of the moving parts of the image increases relatively to the mean velocity of the slit during its passage across the emulsion film.

Suppose, for example, that after equal intervals of time, the slit (Fig. 120) occupies successively the positions[1] F_1, F_2, F_3, F_4, F_5 (purposely made unequal distances, since the velocity of the slit is scarcely ever uniform). Suppose, also, that at the same moments the image of a straight vertical moving line occupies respectively positions denoted by I_1, I_2, I_3, I_4, I_5. The little elements of this image which are photographed at each of the moments considered, represented by the small clear discs A, B, C, D, E, will therefore not give a vertical straight line in the photograph, but a more or less complex curve depending both on the law of movement of the slit, and of the image, and which becomes a straight line if at all times the velocities are proportional, but which would only be vertical if the straight line object remained stationary during the total time of exposure. Obviously, Fig. 120 assumes a very extreme and improbable velocity of the image, and exaggerates almost to the point of absurdity the deformations which are produced in practice. These are not generally serious except in cases such as the images of the wheels of rapidly-moving vehicles photographed close up, e.g. motors on a racing track; the circular wheel is in such cases reproduced as an ellipse, and in certain extreme cases the spokes are actually curved inwards. No shutter placed in the

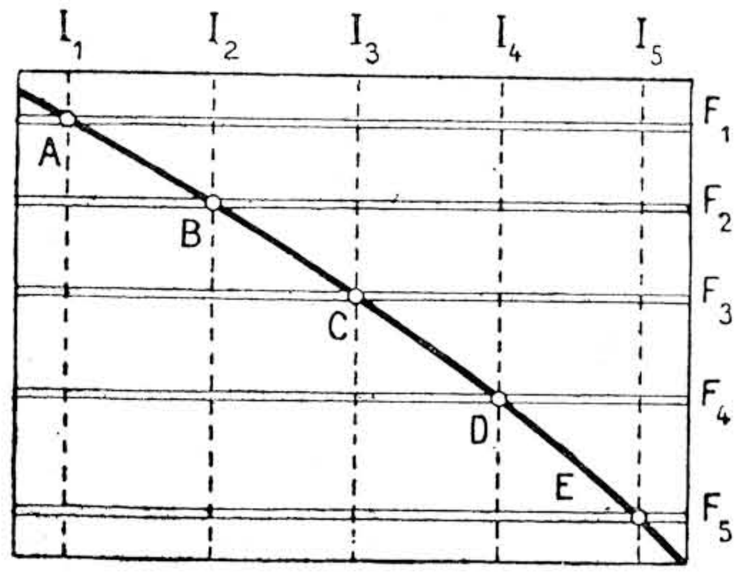

FIG. 120. ACTION OF FOCAL-PLANE SHUTTER

objective would allow of exposures as short as those necessary for photographing on a relatively large scale moving bodies having similar velocities. Of two evils, the least must be chosen, and if one really wants a photograph under such conditions one must be prepared to find it deformed. It should, however, be clearly understood that it is no use trying to make precise measurements on a photograph which has been obtained by using a focal-plane shutter.

141. The focal-plane shutter, the use of which for ordinary photographic practice appears to have been suggested by H. Farmer in 1882, was not made commercially until after its use by

[1] These positions may be determined by photographing a surface which is uniformly illuminated by an intermittent source of light having a known frequency such as the neon lamps used in commercial stroboscopy.

O. Anschütz, in 1888, for studying the attitudes of moving animals.

The total exposure time, and proportionally the local exposure, are affected to a slight extent by variations in the tension of the driving spring. The essential factor for varying the local exposure, as required, is the variation of the width of the slit.

In its original form the focal-plane shutter consisted of a blind made in two pieces, each

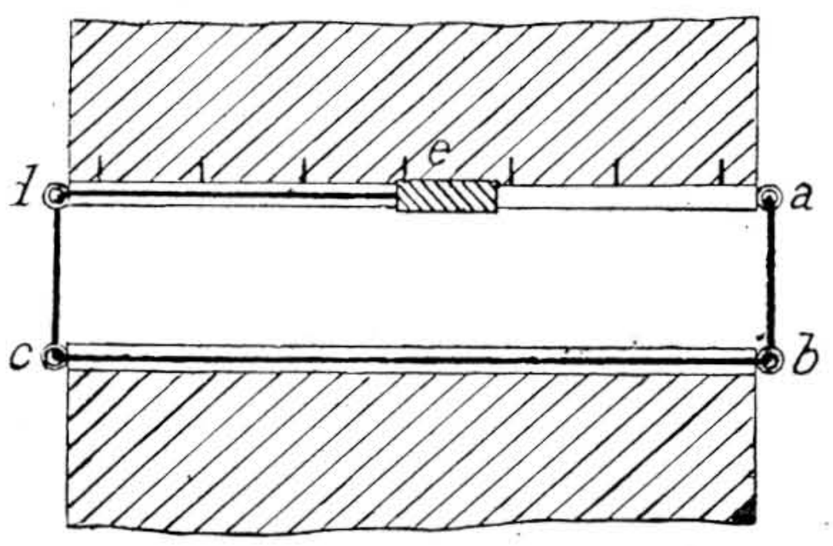

FIG. 121. SLIT ADJUSTMENT OF FOCAL-PLANE SHUTTER

attached to a sufficiently rigid rod and joined together by a cord in such a way that the width of the slit, that is, the distance between the two rods, could be varied within sufficiently large limits. In order to do this, the cord, starting from one end *a* of the rod, passes through the rings *bc* to the end of the other rod, then up through the ring *d* at the opposite end of the first rod, being finally attached to the friction-slider *e* which slides along the rod *ad*. The slit edges having been adjusted parallel, the aperture of the slit may be read off from graduations on the slider. Setting of the shutter and adjustment of the spring tension, as also the release of the latter after use, are done in the same way as in the case of the blind shutter mounted on the lens (§ 133). Exposures of the order of a second are given by hand by simply using the lens cap after having wound the blind beyond the setting position until a slit of width equal to the size of the image to be formed is obtained. Many of these shutters do not give exposures of the order of 1/10th second, for which it is necessary to mount an auxiliary shutter on the lens.

As soon as it was realized that a continuous variation of the width of the slit was unnecessary, the slit regulated as described above, necessitating opening the camera each time it was desired to change the exposure, was replaced by a series of fixed suitably-chosen slits, separated one from the other, in the same blind, by sufficient distances which were at least equal to the width of the image (R. Hüttig, 1900). According as to whether, on setting the shutter, a greater or less amount of blind is wound, so one or other of the slits crosses the image field when the shutter is released, the blind being automatically stopped as soon as one slit had traversed across the whole image. Further, the blind cannot move past this stopping point in order to bring into the field one of the slits in the part of the blind which was previously wound-up on the setting roller. A pointer outside the camera with an indicator mechanism shows the width of the slit available when the shutter is set. The slits are usually arranged in such an order that, merely by changing them, the tension of the driving spring automatically increases as the slit becomes narrower, thus causing the total and the local exposure times to vary always in the same way.

Unless these shutters work in conjunction with an auxiliary blind, which is brought into action by the principal blind during setting and released as soon as the slit has crossed over the field, or unless they are combined with a flap which normally covers the field and which is moved by a lever which acts at the same time on the shutter-release,[1] these shutters have the disadvantage that they uncover the sensitive film while being set.

This disadvantage is avoided by various devices which at the same time allow the width of the slit to be regulated from outside. For example, two separate blinds may be used, of which one, stretched between the driving roller *B* (Fig. 122) and the setting roller *A*, has a fixed slit *ab*, of height usually equal to the width of the image. The other, which runs between the driving roller *D* and the setting roller *C*, ends at *d* and is wound round *C* by means of strips continued from its two sides. The setting rollers *A* and *C* are operated by a common key integral with the toothed wheel *E* which engages simultaneously the pinions mounted on the axes of *A* and *C*. The pinion *A* is keyed to its axle,

[1] The rôle of the flap is taken in reflex cameras (§ 176) by the viewing mirror. In German cameras for aerial photography which are fitted with a shutter having several slits, two metal flaps, with light-tight overlap, are applied against the frame of the shutter by springs, and the release of the blind takes place exactly when these flaps are fully open. Attempts have also been made to prevent mistakes by mutual interlocking of the arm for setting the shutter and that for moving the flap, so that the shutter cannot be set if the flap is open and the flap cannot be opened before the shutter is set.

but the pinion C is held on its axle only by friction. When the blind CD is as far down as it will go, the edge d having passed the limits of the field, the setting key can still be turned and the blind AB raised until the width of the desired slit, as indicated externally on the camera, is obtained between the edges a and d of the two blinds. Ratchet arrangements thereafter prevent any relative displacement of the two blinds, both during their descent, after the width of the slit has been adjusted, and also at setting, during the passage in the field of the slit ab, which is covered by the blind CD as soon as the photograph has been taken.

The most perfect arrangement of a focal-plane shutter camera was devised in 1899 by G. Sigriste. In this camera, which unfortunately is no longer made, the shutter slit, formed by two heavily-bevelled sharp metal flaps, moved only 1/10th mm. from the plane of the sensitive emulsion. The parallelism between the flaps was so good that the width of the slit could be easily reduced to about 1/10th mm. The two metal flaps were joined to the front of the camera by a corrugated bellows of such section that even at the extreme ends of its travel it did not intercept any of the useful beams. Springs which acted as brakes during part of the movement and during the other part acted in a way to help the movement, gave a practically uniform velocity to the slit. By variations in the width of the slit and in the tension of the driving spring, 120 different times of exposure could be automatically obtained. These were indicated exactly for two different positions of the camera, held normally or sideways, from 1/40th second up to 1/5,000th second with an efficiency which did not differ appreciably from 100 per cent.[1] A single movement automatically ensures the covering of the exposed plate and the resetting of the shutter, the slit then being masked by a metal plate.

142. In the case of most focal-plane shutters the velocity of the blind varies quite appreciably from end to end of its course. The blind, starting from rest, possesses a more or less considerable inertia which, in the case of very short exposures and very feeble illuminations, gives rise to a much greater image density along the length of the edge first uncovered.[1] Even though the tension of the driving springs may be decreasing, the acceleration of the slit is very definite, its velocity at the end being often double that at the start. Fig. 123 shows, from the measurements of Verain and G. Labussière (1918), the variations of this velocity in the case of the focal-plane shutter of the 18 × 24 cm. cameras of the French Military Aviation.[2]

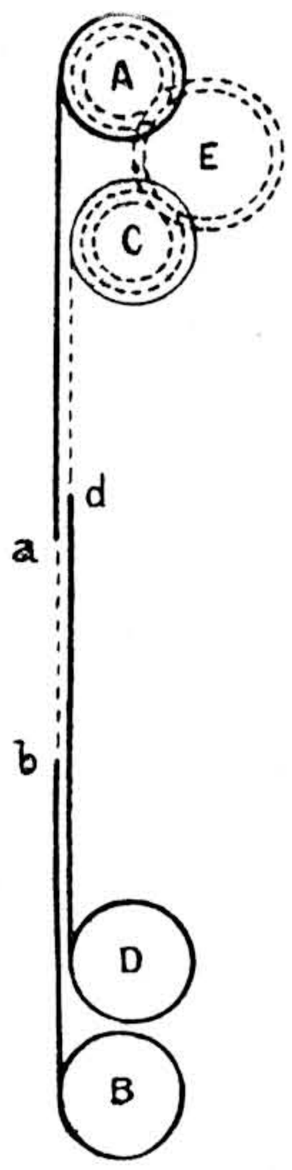

FIG. 122
ADJUSTMENT BY
TWO BLINDS

Except in special cases the average velocities of the blind corresponding to the extreme tensions of the driving springs are practically the same. On modern makes of shutters these extreme velocities are in the ratio of 1 : 1·20 or of 1 : 1·54. It is only on very carefully-made shutters that this ratio reaches a value of 1 : 2. (In the Sigriste camera this ratio is as much as 1 : 6, which shows how much room there is for improvement in the construction of more common types.)

Accurate measurements of exposure times have shown that the values of local exposures indicated on many focal-plane shutters are very much less than those that actually are obtained, the error frequently being as much as 100 per cent.

143. Except in rare cases where the edges of the slit of the shutter are in actual contact with the emulsion, any point of the sensitive film does not pass suddenly from complete darkness to the full illumination which the lens would produce in the absence of the shutter.

[1] The only other camera that may be mentioned as having an efficiency equal to unity is the Aerophote, an aerial camera using roll films, and in which the edges of the slit slide *in actual contact* with the emulsion. Mention may be made here also of the focal-plane shutter of Lenouvel (1921) for aerial photography designed to make the local exposure and the total exposure approximately equal. In this apparatus two metal plates carry a series of parallel slits which mask one another in the position of rest; on being released one of the plates slides on the other, so that the slits coincide and then these are displaced together through a distance equal to two slits, after which they again immediately overlap.

[1] Arrangements have been suggested for automatically compensating this variation in the velocity of the blind by a continual variation in the width of the slit in such a way that the local exposure remains constant.

[2] Measurements made on a different shutter by P. Schrott (1919), showed curves indicating an increasing acceleration (i.e. curves concave upwards).

Consider a cross-section (Fig. 124) through the optical axis perpendicular to the slit. Let d be the diameter of the exit pupil, f its distance from the emulsion P; l the width of the slit MN in the blind R, which is at a distance e from the sensitive film. The planes through the edges of the slit and bounded by the edges of the pupil determine on the one hand a zone MAN inside which the illumination is the same as in the absence of a shutter, and, on the other hand, a zone MBN of which the regions, not common with the preceding, constitute reduced zones in which only a fraction of the pupil can be seen, which fraction becomes less as the distance from the zone of full illumination increases.

Focal Distance F (inches)	Relative aperture d/F	Distance from the blind to the plate e (inches)	Slit widths (inches)				
			0·04	0·20	0·39	0·78	1·57
10·23	1/5·7	0·51	30·5	71·2	81·4	89·7	94·6
10·23	1/5·7	0·90	19·9	55·4	71·3	83·2	90·8
20·46	1/6	1·57	13·1	37·5	60·0	75·1	85·7

It should be noticed that the time of exposure is not, as one might think, exactly proportional to the width of the slit, but to the width of the illuminated band st, i.e. to the expression

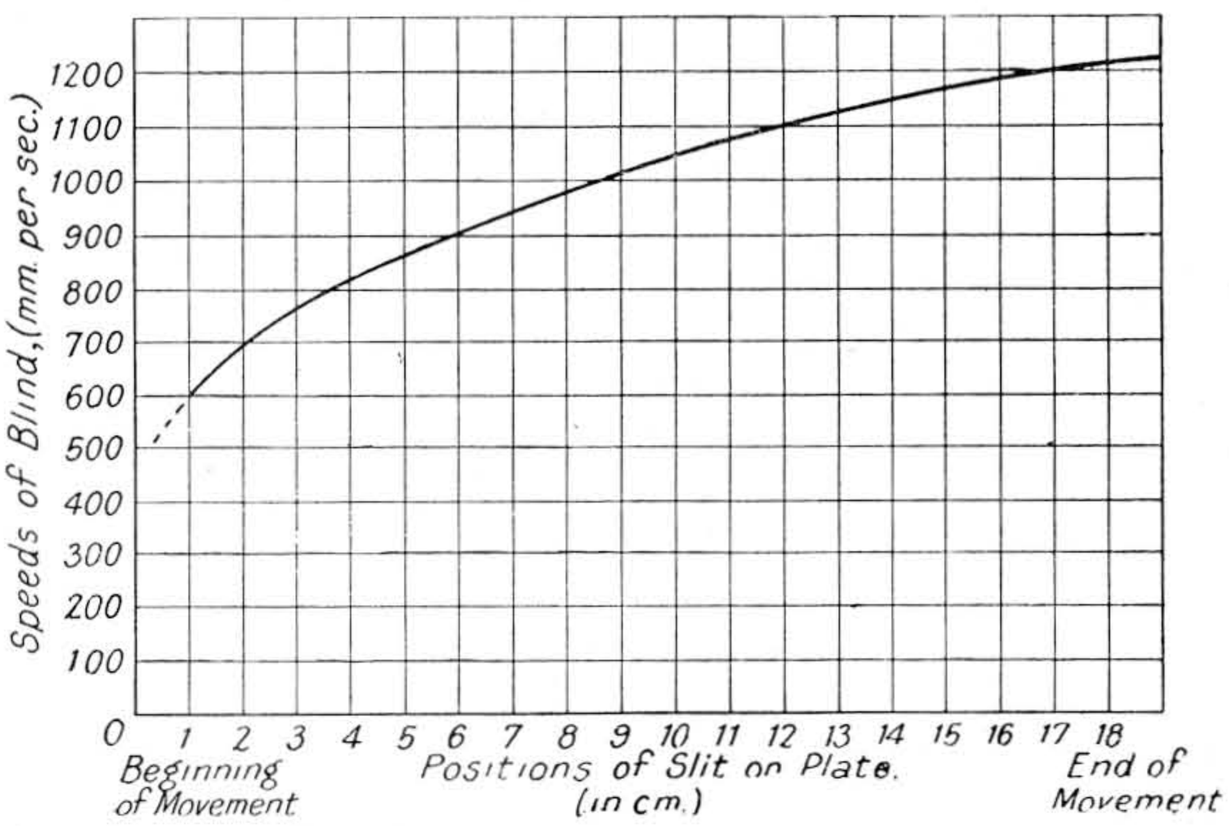

FIG. 123. VARIATION OF SPEED OF BLIND DURING EXPOSURE

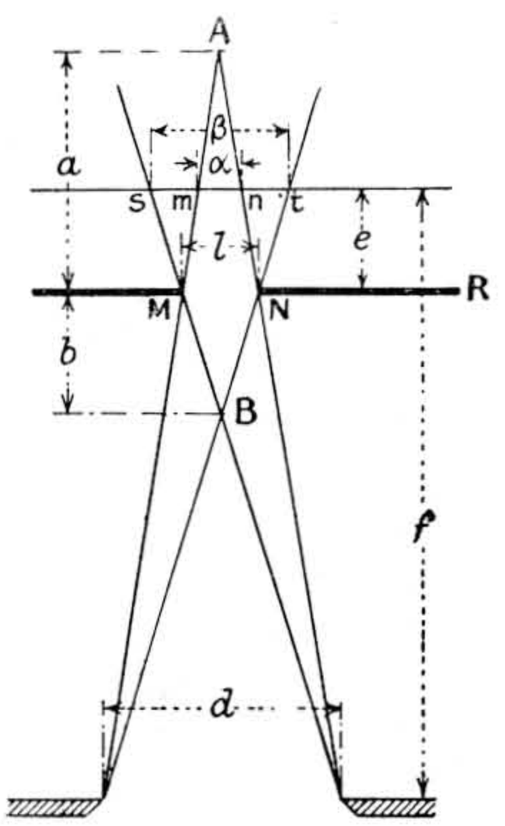

FIG. 124. EFFICIENCY OF FOCAL-PLANE SHUTTER

distance from the zone of full illumination increases.

Calculations which cannot be reproduced here show that, when the zone of full light reaches the emulsion layer ($a > e$), the efficiency is equal to the ratio of the sum of the widths of the band mn, cut at the film by the cone of full illumination, and of one of the bands of the penumbra sm or nt, to the total width of the illuminated band st. This efficiency is given by the expression

$$\text{Efficiency} = \frac{1}{1 + \frac{de}{fl}}$$

The table given below (M. Pau and L. P. Clerc, 1917), calculated for certain cameras of the French Military Aviation, shows the values of the efficiency for different given widths of the slit.[1]

[1] The efficiency for the slit of 0·04 in. is only given so as to show how rapidly the efficiency decreases when a slit situated anywhere else than in the plane of the image has a very small aperture. On the cameras considered this narrow width of slit was not allowed because of lack of rigidity of the edges and the resulting variations in the width of the slit at different points. By examination of the above formula it will be noticed that the efficiency tends to get worse as a greater relative lens aperture is employed.

$l + (ed/F)$. The exposure is thus proportionally longer for narrow slits than for wide ones.[1]

144. Practical Rules for the Use of Focal-plane Shutters. Over a considerable range of exposures, a given local exposure time may be

[1] It is important to note (A. Klughardt, 1926) that in the case of a focal plane shutter of which the blind moves with a uniform velocity, the product of the local exposure time and the efficiency is a constant when only the distance of the blind from the sensitive film is varied. The quantity of light is then the same, whatever the position of the shutter may be, if all other conditions remain the same, but this quantity of light is received in a length of time which increases with increasing distance of the blind from the emulsion.

obtained under different conditions, since an increase in the width of the slit can be compensated by a greater velocity of the blind brought about by increasing the tension of the driving spring. For any given exposure it is best to adopt the greatest possible speed of the blind; by doing this the total exposure is reduced; so also are the possible deformations of moving objects, and the wider slit which can be used results in an improvement in the efficiency.

In addition there is the question of the best position for the shutter in order that the deformations may be kept reasonably small when photographing a very rapidly-moving object. If the slit moves in the same direction as the image, the latter will appear to be lengthened; if it moves in the opposite direction the image will be compressed. Lastly, the image will appear distorted if these two directions are not parallel, the distortion being a maximum when the movement of the slit is perpendicular to that of the image. This last arrangement should, of course, always be avoided when photographing rapidly-moving objects; it depends on the type of object which of the other two arrangements will give the better result.

In cases where a focal-plane shutter is used for photographing a landscape which contains no quickly-moving object, advantage may be taken of the variation of local exposure from one end of the image to the other to reduce slightly the exposure of the sky and the distance.

The width of the slit may be verified, after the shutter is set, by keeping the hand on the setting button while making the release, so as to allow the blind to descend only very slowly, so that it can be stopped half way. After the slit has been measured the shutter can be wound again.

In using a focal-plane shutter, the camera should be kept quite still during the *total* exposure, which may be much longer than the *local* exposure. Any movement made will give rise to a more or less extended blur.

145. Choice of Type of Shutter. There is no type of shutter which may really be said to be universal any more than there is one lens suitable for all purposes.

Portrait photography is usually best carried out with inside flap shutters or bellows shutters, the chief essential characteristic of which is silence in action. Their low efficiency is not very serious at the relatively long exposures usually employed. The amateur who has not too much money to spare will often do better to buy a well-made blind shutter of an efficiency equal to and sometimes greater than 60 per cent, rather than give the same price for a bad diaphragm shutter of efficiency often less than 30 per cent, and which often behaves irregularly, especially at exposures of medium speed. Further, the blind shutter is perfectly suitable in almost all cases of commercial photography, though its use is incompatible with that of very wide angle lenses.

A focal-plane shutter is almost essential for the photography of sports events, but it must have a blind which runs close to the sensitive film, since a high efficiency is indispensable in this kind of work where, as a rule, plates cannot be exposed long enough to give the correct gradation.

In modern Press work and amateur photography, use should not be made of focal-plane shutters except when, as in the case of the previously-mentioned Sigriste camera, they have an efficiency practically equal to 100 per cent, in which case they should be chosen for their efficiency rather than for the very short exposures which can be made with them. The best diaphragm shutters easily give exposures of 1/300th second, sometimes even 1/500th second, when the diameter is very small, with much greater efficiencies than those of badly-mounted focal-plane shutters. The mean value of efficiency determined for a great number of focal-plane shutters at the shortest exposures possible has been found by T. Smith to be equal to 50 per cent, whilst cases were met with where the efficiency was not more than 25 per cent for an exposure of 1/400th second.[1]

It must therefore be concluded that except for special work or for focal-plane shutters which are ideally mounted, the good modern diaphragm shutters are, on the whole, distinctly superior to focal-plane shutters.

146. Shutter Testing. Methods used in shutter testing are very different, according as to whether it is simply desired roughly to determine the exposure corresponding to each setting or to study the full movement of the shutter leaves or blind.

Some of the methods used for the approximate determination of the exposure can be carried out without any special equipment. Of these may be especially mentioned the process which consists in photographing at a

[1] Note that as regards exposure the use of an objective with aperture $F/5{\cdot}6$ in conjunction with a shutter of 60 per cent efficiency, is equivalent, as far as the effective illumination of the plate is concerned, to an $F/4$ objective used with a shutter of efficiency only 30 per cent.

known magnification a luminous or well-lit object moving with a known velocity, and measuring the length of the image registered during the time the shutter is open. As a moving object a steel ball falling freely through a definite distance may be used; or a radius painted white on a gramophone disc, of which the number of revolutions per second may be determined; or a bright mark fixed to the rim of the wheel of a bicycle, of which, after having exactly determined the gear ratio, the crank is turned at a known rate measured on a seconds watch or a properly-adjusted metronome. In the two latter cases, measurement of the angle subtended at the centre by the arc which is recorded allows the exposure time to be calculated. If this process is carried out with a dark background it is easy, by decentering the objective each time, to photograph on the same plate, without any risk of confusion, the arcs corresponding to the different shutter settings.[1]

Still another way of shutter testing is to photograph a source of light which is periodically extinguished with known frequency, by sharply displacing the camera during the exposure, in such a way that the different images of the source are distinct from one another and can be counted. For example, an alternating current electric arc may be photographed, or, if greater accuracy is required, a singing flame adjusted to a diapason (U. Behn, 1901) may be photographed in a suitably-equipped laboratory.

An entirely visual process which is very suitable for rapid testing in factories, consists in having a luminous point which is rotated in a circle by a motor of variable speed which is given on an indicator. The speed is continuously increased until the image seen on a ground glass, and originally limited to an arc of a circle, closes into a complete circle. The time of exposure is then equal to the duration of one revolution (R. A. Woolven, 1913).

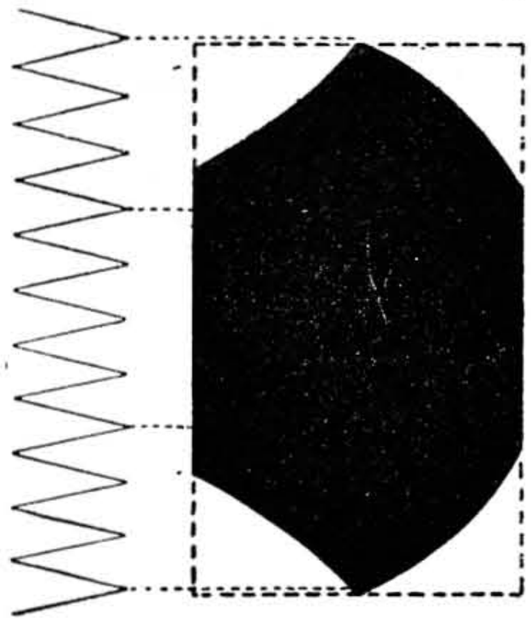

FIG. 125

FIG. 126

FIG. 127

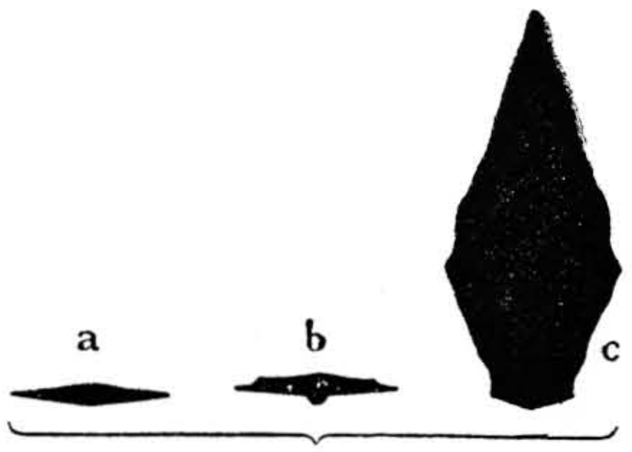

FIG. 128

MEASUREMENTS OF EFFICIENCIES OF SHUTTERS

For the complete study of the movement of shutters one can, in addition to the cinematographic process already mentioned (§ 129), project the image of the shutter on to a fixed slit behind which a drum covered with sensitive paper is turning rapidly with a known velocity. On development, this gives a record similar to that reproduced in Fig. 125, where is also shown the vibration of a diapason (each complete vibration represents 1/300th second), in such a way that the time of opening, of full aperture, and of closing, may be read off directly.[1] The efficiency is equal to the ratio of the area traced out to that of the rectangle shown by the dotted lines (de la Baume Pluvinel, 1889). By means of this method any peculiar behaviour in the working of the shutter can be investigated, such as the rebounding of the leaves after closing (Fig. 126), excessively slow closing (Fig. 127),

[1] It has sometimes been suggested to evaluate, if not the true exposure, at any rate the effective exposure (i.e. product of exposure time and efficiency), by exposing part of a plate for one second, and other parts during 10, 20, 40, 80 . . . openings of the shutter at a given setting, and finding in the latter bands those of which the density is near those of the known exposure, if necessary making a second series of tests to narrow down the possible interval. Unfortunately it is not correct to say that 70 exposures of 1/70th second have a photographic effect equal to that of an exposure of one second. The effective exposure can be ascertained by a simple reading by measuring the charge of a condenser after it has received the current emitted (or transmitted) by a photovoltaic (or photo-emitting) cell exposed, during the working of the shutter, to the rays from a light source of constant intensity, i.e. fed by a steady current (Zeiss-Ikon, 1931).

[1] For this purpose an intermittent light-source, or a continuous one the light of which is periodically cut off by the spokes of a wheel rotating with known velocity, may also be used.

or variations in behaviour for the same setting. In Fig. 128, *a*, *b*, and *c* correspond with three consecutive releases of a given diaphragm shutter without any variation in the adjustment of the exposure time (T. Smith, 1911).[1]

The same method is applicable to the study of focal-plane shutters, for which also a method may be used which is based on the deformation of the images of the radii of a disc rotating at great speed and photographed at high magnification (M. Houdaille, 1905).

147. Shutter Releases. The direct release of shutters by finger pressure on a lever is usually only used for short exposures because of the risk of shaking the camera. For medium or long exposures a rubber bulb has long been used. In the older type of shutters this bulb was joined by a tube of any suitable length to the bellows forming the actuating element, and in the more modern shutters to a small pump operating on the release lever.

Different types of metal pumps have been unsuccessfully tried as substitutes for the traditional bulb. In order to avoid any premature release, the use of bulbs having small circular holes which could be closed by the thumb has been suggested. For the regulation of exposures of the order of a minute with blind shutters a connection carrying a tap with a movable index on a dial graduated in times of exposure is sometimes used between the bulb and the connecting tube. Pneumatic release, with use of a sufficiently large bulb and connections in several different directions, is the best arrangement for the simultaneous release of several cameras fairly close together, or for the simultaneous control of a camera and a flash-lamp.

The use of metal releases in photography started at the time when the flexible metal controls for bicycle brakes, invented by E. M. Bowden in 1897, were becoming common. These controls consisted of an unstretchable steel wire cable inside an incompressible sheath, made by winding a metal wire spirally around the cable. By means of a lever a pull can be exerted on the cable simultaneously with a push on the sheath. At the other end, one of the parts is attached to a fixed part of the camera and the other to the release lever or piston, thus exerting on the two points of attachment equal effects in opposite directions and thus not shaking the camera. When the release is let go, the cable and sheath return to their positions of rest, due to the action of a spring. The arrangements for attachment vary with the type of shutter to which the release is to be fixed.

These releases are in general use and are considerably less clumsy than pneumatic bulbs. Unfortunately they are very fragile, since any bend in the sheath gives rise to a permanent deformation and to friction which prevents the cable sliding easily, and they cannot easily be made good. Also, care should be taken to prevent the release being too curved when rolled up.[1] Special models with reinforced sheath have been made with long lengths of tube for use on professionals' cameras, but this is not at all general.

For release at relatively great distances from the camera (for photographing small animals at large, or groups in which the person taking the photograph wishes to appear), a special form of release may be used, such as a cord passing through a loop in a stake fixed in the ground under the camera, and connected to the latter through a flexible spring so as to avoid vibration, or an electro-magnetic release, similar to the mechanism of electric bells, worked by a dry battery.

There are many types of releases with different actions for operating a shutter at the expiration of a fixed time, variable at the will of the operator, the release being preceded by the appearance of some sign which takes the place of the formula " Now keep quite still! " Some of these releases have in addition an auxiliary mechanism for closing the shutter after a certain time (adjustable at will between wide limits), in the case of " time " exposures.

For using photoflash lamps (§ 297) it is a common practice to fit synchronized shutter releases with an electric contact so that the duration of full opening of the shutter coincides or slightly exceeds the very short moment of time during which the lamps gives the maximum of light intensity.

[1] It is advisable to make sure that a shutter when mounted on the camera with which it is to be used does not give rise to any objectionable vibrations. For this purpose it has been suggested (H. Wurtz, 1906) to fix a pencil firmly to the camera parallel to the axis of the lens, the pencil being as long and as sharply pointed as possible. The camera is mounted on its tripod and brought near to some object to which a white piece of paper can be fixed, the camera being placed so that the pencil just touches the paper. If, when the shutter is released, the pencil makes a mark on the paper, then there is a possibility that the vibrations may be detrimental to the sharpness of the image.

[1] When the sheath has thus become lengthened the piston that enters the shutter may no longer project sufficiently to actuate the release. This fault can be rectified by twisting the sheath on itself in such a direction as to tighten up the whorls.

CHAPTER XIII

STAND CAMERAS: COMMERCIAL, PROFESSIONAL, AND SEMI-PROFESSIONAL

148. General Notes. The photographic camera no longer inherits the primitive simplicity of the Daguerreotype box, to which the familiar term "camera obscura" could be strictly applied, and which consisted of a box into which light was admitted only through the lens placed in the centre of one of its sides.

Hand in hand with the successive improvements in photographic processes, their uses increased infinitely, and thus different types of camera were evolved, each differing to a greater extent from the original form, until, externally at least, they no longer have any character in common, each being designed for a special purpose. This specialization, which is inherent to all progress, leads us to classify the various types of camera according to the purpose for which they are more chiefly intended.

It is obvious that with a camera for photographing stationary subjects or posed sitters, the conditions to be fulfilled are very different from those requisite in an instrument for taking instantaneous views or for photographing unobserved a person or animal.

The former, which are intended for commercial or studio work, are generally made in large sizes, without regard to bulk or weight, at any rate within certain limits, since they are intended for use on a rigid stand, and will not be carried from place to place except for special reasons. The latter need to be easily concealed, and will, therefore, always be of small sizes. If they are to be of the utmost service to the user they must be light enough to be carried about constantly, so as not to risk missing any interesting and unexpected subjects.

The stand camera will vary, as regards the different movements embodied in it, according as it is intended entirely for studio use (in copying flat originals, photographing articles for catalogue illustration, or for portraiture), or, as it is chiefly for use out of doors, in commercial photography, architectural or landscape work.

While this is a somewhat arbitrary division, we will confine this chapter to the description of cameras solely for indoor use, and of those which, while portable, are intended exclusively for use on a rigid stand. In the next chapter we will describe cameras generally used in the hand, though suitable for use also on a light stand.

We shall confine ourselves to a brief description, referring the reader to the makers' catalogues for details.

149. Names and Functions of the Parts of a Camera. A camera consists essentially of two *bodies*, of which one (the front) supports the lens flange, while the other (the back frame) receives alternately the ground-glass screen, on which focussing is done, and the *dark slide* in which the light-sensitive material is carried from the dark room to the camera and back again. These bodies are connected by a *bellows*, similar to the bellows of an accordion, made of cloth or leather, which allows the distance between the two bodies to be varied over a considerable range,[1] while shutting out all light except that admitted through the lens.

The lens flange is not fixed directly to the camera front, but to a *lens board* or *lens panel*, which slides in grooves permitting it to move parallel with itself upwards or downwards (*vertical rise*) or towards the right or left (*cross front*). Several interchangeable panels can each receive the flange of one of a series of lenses in use.[2]

The two camera bodies are guided parallel with each other in grooves fitted in the *baseboard*. One or other of them is sometimes fixed permanently to this baseboard. The movement of the movable body (or of the two bodies) is generally done by two pinions mounted on one rod. These pinions engage in two racks fixed parallel with the optical axis. Helicoidal racks (with oblique teeth) afford a finer movement. When both bodies are movable, the front one is often arranged to be moved directly by hand. In better-class instruments it is often controlled

[1] In the course of these movements the volume of air within the bellows increases and decreases, sometimes to a very considerable extent, and air-holes must be provided in the frame of the ground-glass screen to prevent damage to the bellows. Such vents are often provided by cutting off the corners of the ground-glass.

[2] It is well that all lens panels should be interchangeable among all the cameras in a studio, or among the cameras used away from the studio in a business of commercial photography.

by a winch-screw fixed along the longitudinal axis of the baseboard. In every case it is necessary to be able to fix the bodies firmly in the position reached in the course of focussing.

Camera extension is the term used to denote the distance between the front surface of the lens panel and the surface of the sensitive plate or film.[1]

In the case of cameras especially designed for portraiture, commercial and landscape photography, it is advisable for the rear body not to be a fixture in a plane perpendicular to the normal position of the optical axis, but capable of inclination to 10° to 15° on this axis. To do this the rear body is pivoted on horizontal pins fixed to a frame which can be moved along the baseboard, and the camera is then said to have a *vertical swing*.[2] A similar mounting on vertical pins is sometimes employed and is termed *horizontal swing* or *side swing*.

When it is necessary to copy transparent objects, with avoidance of the light reflected from the surface of the object which faces the lens (enlargement and reduction of negatives, etc.), a camera, consisting of three bodies, is generally used. In this the lens is mounted on the midway body, while the transparent object is carried by the front body. If a very long extension should be necessary, the lens can be fixed to this front body, but as a rule it is preferred to fix it to the middle one, in which case the front body and the bellows connecting it to the middle body form a most efficient lens hood (§ 124).

The baseboard of a triple-body camera is generally formed of two portions sliding one within the other to avoid unnecessary bulk when the maximum extension is not being used. The front body is then fixed to the sliding extension, and the movement of this extension from the fixed portion of the baseboard is regulated by a winch-screw operated from the rear of the camera. The baseboard of a camera which extends in this way is never as rigid as a one-piece baseboard, and the extension must therefore be supported on a table.

In the case of studio cameras and some field cameras, bellows of square section are used. The photographic plates, which are usually oblong in shape, can then be placed one way or the other as desired, the long side being either vertical or horizontal. For this purpose, in studio and copying cameras, square dark slides are often used, fitted with rebates to take the plate in either position. In other cameras, chiefly those of portable square bellows pattern, the rear body is made square and is fitted with a loose frame (*reversing back*), which carries the oblong dark slide and allows of it being placed either upright or horizontally.

When, as often happens, plates are used of smaller size than the maximum size for which the camera is built, adapting frames or *carriers* are placed in the dark slides. It is possible to have a set of these carriers (called *kits* in the United States) fitting in each other and each corresponding with a given plate size.

When, however, a camera is regularly used with small plates, it is generally preferred to employ dark slides of that size, fitting these to the camera back by means of an adapter.

The dark slides used with studio cameras are nearly always *single slides*, taking only one plate or film. Field cameras, on the other hand, have *double slides* containing two plates, one on each side of the slide.

The slides of studio and copying cameras are usually closed by a flexible curtain shutter, formed of thin strips of wood glued on an opaque fabric. To uncover the plate, this curtain or blind is drawn aside by means of a tag at the back of the slide after the latter has been fitted to the camera (roller-blind or curtain slide). Most dark slides of smaller size are closed by a rigid shutter or by a shutter hinged in one or more places.

If the image seen on the ground-glass or focussing screen is to be recorded with equal sharpness on the sensitive emulsion, it is essential that the plane of the front ground surface of the focussing screen shall coincide exactly with the plane of the sensitive surface as determined by the rebates or turn-buttons.

150. Cameras for Commercial Copying. In making large-size copies of originals, as is done in cartographic and photo-mechanical work, the following arrangement may be employed with advantage, provided the building is not

[1] In order to increase the maximum extension or reduce the minimum extension of a camera in certain circumstances, the lens board is sometimes replaced by an extension piece, consisting of a box, one end of which fits into the grooves on the camera front, to receive the lens panel, while the other end carries the lens flange. These accessories are usually rectangular in section; the one affording greater extension is known as an *extension box*.

[2] In order that the swing may be used, if necessary, for restoring perspectives registered on a non-vertical plane (Chapter XLV), it is necessary that the common axis of the pins be in the plane of the image, for otherwise this operation would entail interminable trials.

subject to vibration from machinery or heavy traffic.[1] The lens is mounted on a plate fixed to a partition separating the dark room from the studio. Rails, sunk in the floor parallel with the optical axis, carry in the studio a travelling easel and in the dark room a travelling support for the plate, the rails being fitted with carriages and mechanism for moving the latter slowly and holding them fixed. One of the advantages of this arrangement is that a dark slide becomes unnecessary ; such a slide would be exceedingly bulky and heavy when the plate is as large as 5 square feet in area, or larger.

In smaller sizes it is usual to employ a photographic camera of the normal type, but of heavy build in the wooden parts, strongly reinforced with metal, and thus capable of withstanding daily wear and tear. The fine finish and ornamentation often lavished on studio cameras are out of place here. Various movements, such as swing and rising or cross front, which are of great value for other purposes, are useless or a positive drawback in this particular case.

The rigid baseboard, made in one piece, must ensure the strict parallelism of the bodies. Its length is usually sufficient to permit not only of copying to same size, but also of some slight enlargement. For this, the extension must be somewhat longer than twice the focal length of the lens employed. In order that the same lens used for copying same size or on a reduced scale may be used for making copies larger than the original, the baseboard of the camera would have to be of such excessive length as to be unmanageable in ordinary work. When a copying camera is used to make an occasional enlargement, the usual lens is replaced by one of much shorter focal length.

To a greater degree than in the case of any other camera, the maker must assure the absolute coincidence of the focussing plane and the plane of the sensitive plate. This absolute register cannot be obtained if the ordinary kind of carrier be used when employing plates smaller in size than those for which the camera is made. A *universal adapter* must be used. It is formed of two horizontal bars movable up and down between the vertical sides of the dark slide, the arrangement being similar to that used for supporting at various heights the lugs bearing the shelves of a cupboard or bookcase.

Owing to the frequent use of wet-collodion plates in reproduction work, the dark slides are loaded from behind, and the lower bar, of aluminium, is so shaped that the drippings coming from the plate during exposure may be caught on strips of filter paper.

To check register, it is advisable that focussing be done in the dark slide itself after placing a matt glass screen in the rebate provided for the sensitive plate. For this reason the curtain of the slide should be completely removable. This focussing in the dark slide should be done, not on a sheet of ordinary glass, the surface of which is more or less uneven, but on plate glass, on which some transparent patches have been left, e.g. along the diagonals, when matting the surface. The attachment of the dark slide to the back of the camera must be very smooth, but without any play, which can be done only by making the attaching parts entirely of metal.[1]

151. Originals to be photographed are sometimes secured by their corners by drawing-pins to a board built up of several layers of wood in order to lessen the risk of warping. Access of stray light into the camera is avoided by blackening the face of the board to which originals are fixed. Blackening the front body of the camera likewise reduces the risk of reflections from glossy prints or such as are mounted under glass. Valuable originals cannot, however, be pinned ; they may be secured between the copying easel and the heads of drawing pins inserted around their edges, or under clips sliding in grooves in the easel, or they may be held flat under glass, using, say, a printing frame fitted with springs (§ 504) ; or, if the whole or part of a page of a book that cannot be taken apart has to be copied, a special frame can be used

Framed documents and mounted paintings are usually held between the jaws of an easel

[1] In such a case the various parts of the apparatus may be made to roll beneath a rigid frame suspended by springs from the ceiling.

[1] Mention must be made of the cameras, such as the Photostat, used in many public offices (banks and insurance companies) and drawing offices for rapidly multiplying documents. The original is photographed direct on paper supplied in spools. In order to obtain an unreversed copy, the lens is fitted with a reversing prism (§ 123). The originals to be reproduced are placed flat on a horizontal table, or against a vertical plate, where they are held by suction or by electric attraction. This type of machine is usually handled by non-technical workers, and is almost automatic in operation. In some, even the development and fixing of the paper, cut automatically after each exposure, are carried out in the machine, but this arrangement is not advisable because of the injury to the woodwork and mechanical parts by the constant moisture and frequent splashings of liquid.

similar to an artist's easel. The copying board may also be held in this manner.

152. As strict parallelism must be automatically assured between the copying easel, the lens board, and the sensitive surface, it is necessary that the easel and the camera be mounted on one and the same rigid base, at least one of the two being movable on rails parallel to the optical axis. The orientation of the object holder must be adjustable according to need.

In all cases where the floor of the work-room is subject to vibration, the rigid base mentioned above must be arranged so that it is free to move as a whole. This is done either by cords hanging from the ceiling or by springs fastened to another framework resting freely on the floor. The worst that can then occur is that the whole apparatus swings, without, however, any displacement of the camera relatively to the original. This enables perfect sharpness to be obtained even if the exposures are of considerable length.

153. Studio Portrait Cameras. As these cameras are never used outside the studio, considerations of weight and bulk are altogether secondary to those of stability and rigidity, and of precision in manipulation. The camera is usually of the triple-body type, so as to allow, if necessary, of the copying, enlargement, or reduction of negatives and transparencies. The long extension of a triple-body camera permits the use of lenses of long focal length when required. When a long extension is not needed the front part of the camera acts as a lens shade, which is an indispensable accessory in a studio, where the great volume of light from walls and roof may cause general fog on the image as a result of multiple reflections within the lens.

The size of plate accommodated by a studio camera is never less than $8\frac{1}{2} \times 6\frac{1}{2}$ in., and rarely exceeds 12 × 10 in.

In either of its positions (on the middle body or on the front body) the lens must be fitted with a considerable amount of rise and fall, the height generally chosen for it being at the level of the sitter's eyes. The camera back is usually fitted with a vertical swing. This permits of a large lens aperture being used, and yet of uniform sharpness being obtained throughout the image of a seated figure, the knees and face of which are at very different distances. It also allows of the plate being brought into a vertical plane when the front of the camera has been pointed downwards, as in photographing a child, who is often best photographed from some height, that being the position from which a child is usually seen.

The dark slides are generally of single pattern with a curtain shutter, of square shape, and fitted with a series of rebates to take the plates either way ; also with sets of carriers. Modern slides are often fitted with devices enabling either glass plates or flat films to be used at will. The focussing screen is marked, usually in pencil, with the outlines of the different sizes in common use.

The *repeating back* with which a studio camera is usually fitted enables two or more negatives to be made in succession on the same plate, and allows the focussing screen to be quickly replaced by a slide, the shutter of which has already been drawn. The repeating back is interchangeable with slides of the full size of the camera, and consists of a board with slide bars accommodating a frame that can be pushed along them until checked by stops. This frame takes dark slides of $6\frac{1}{2} \times 4\frac{3}{4}$ in. (in the United States, 7 × 5 in.) or $8\frac{1}{2} \times 6\frac{1}{2}$ in., and a focussing screen is permanently fixed at one end of it. Velvet light-traps half-embedded in this sliding frame prevent light from reaching the plate after it has been uncovered. In the centre of the board there is an aperture of the dimensions of the plate (sometimes with a detachable mask for another size). Notches placed at the proper points of the slide-bars automatically engage with a spring-bolt fixed on the sliding frame.

For easy working it is necessary that the dark slides should be sufficient in number to obviate having to unload and refill them too frequently.

The focussing cloth, which is needed for inspecting the image on the screen, must be of perfectly opaque material (very close cross-weave) and of ample size.[1] On some cameras the cloth is supported by a light metal frame fixed to the back of the camera and forming a kind of hood which keeps the cloth clear of the operator's head. Not only is this arrangement a more comfortable one, especially in hot weather, but it is required by elementary hygienic reasons where several operators are likely to follow each other at the same camera. Portrait cameras are sometimes fitted with a *vignetter* (Nadar, 1863), which enables the picture of the bust of the sitter to be limited by a gradual shading off into the light or dark tint

[1] In a portrait studio the black cloth may be lined outside with a thin material of light colour.

of the background. For vignettes against a dark background an opening of appropriate shape is cut out of black, matt-surfaced card, and fixed inside the camera between the lens and the plate, far enough from the latter not to cast a sharp shadow. For vignettes against a light background, a similar aperture is cut out of white card, generally with a serrated edge, and this is held in front of the camera, inclined at an angle such that the surface of the card is well lit. Rods passing beneath the camera enable the operator to regulate at will the distance, height and tilt of the vignette while following the result of these adjustments on the focussing screen.

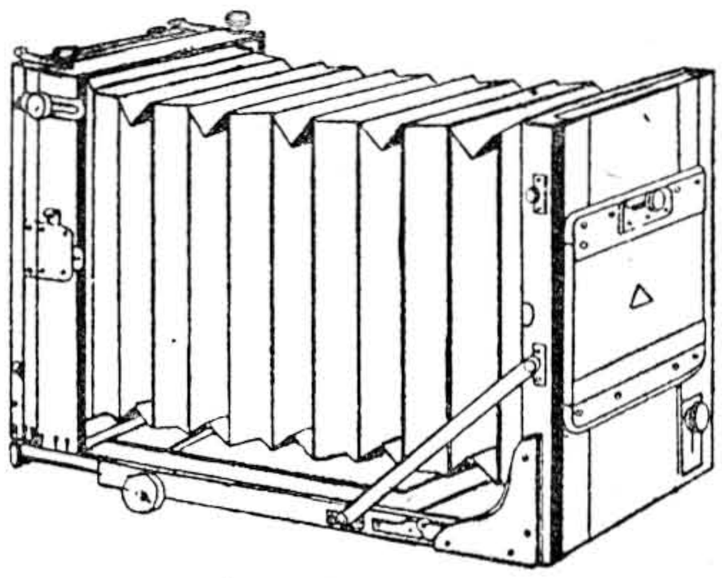

FIG. 129A. SQUARE-BELLOWS CAMERA

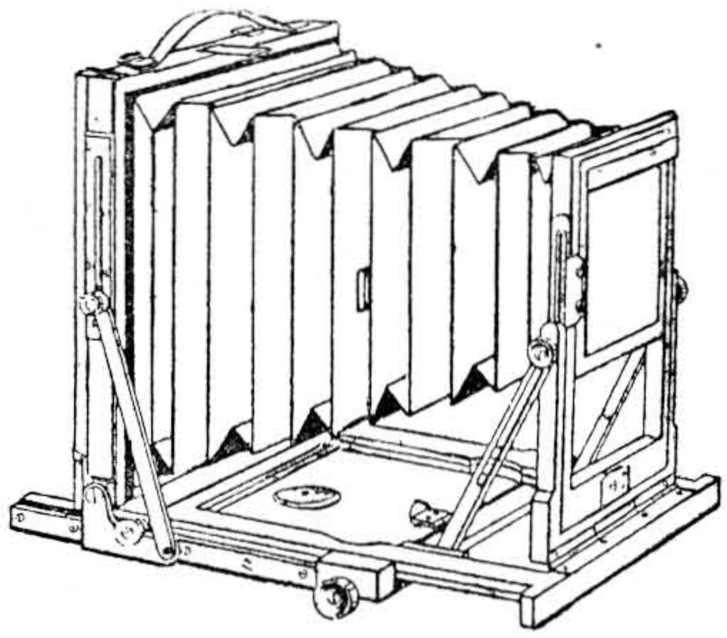

FIG. 129B. TAPER-BELLOWS CAMERA

At various times the suggestion has been made (Disderi, 1864; Melcy, 1905) to use for studio portraiture two cameras, placed one on the other, and fitted with lenses of identical focal length (but which may be of different optical quality). The upper camera is used only for focussing and composing the picture, while the lower one is the camera proper.

154. The studio camera must be capable of being fixed at various heights and at various angles. When a triple-body camera is to be used for copying by transmitted light, it must even be capable of being pointed to the sky at an angle of about 45° in order to illuminate as strongly and as uniformly as possible the negative or transparency placed in the front body beneath a sheet of ground glass.

The studio stand has long been in the form of a small table, or platform supported on pillars sliding within the framework. Racks and pinions enable the front and the back of the top to be raised or lowered either simultaneously or separately. On this system the maximum height to which the top can be raised is only about 33 per cent more than the minimum height to which it can be lowered. The arrangement is very stable and is still used for certain branches of commercial photography. But for portraiture it tends to be replaced by an arrangement giving a larger range of movement. In this there is a table or top, carrying the baseboard of the camera, which top can be tilted on a horizontal axis. The table moves up or down between two or four pillars fixed to a base. Pinions fixed beneath the table engage with racks on the insides of the pillars which sometimes contain counterweights. The top can thus be lowered to about 16 in. from the floor, and can be raised to a height limited only by the height of the pillars.

In either case the stand must be mounted on castors, allowing it to be moved easily and rapidly. It is preferable, especially when the stand is to move on carpets, that the castors be of large diameter with rubber tyres. Once the stand has been brought into position it can be fixed there by means of four movable rods which project a little under the stand and lift it slightly, usually by operation of a pedal.

Various patterns of stands, of simple construction, similar to the former of the two types described, can be used with studio cameras of small size.

The camera is usually secured to the top of the stand by means of screw clamps.

It has been suggested (H. Hill, 1910) that a large mirror be stood in front of the camera, with the silvering removed in places to form apertures for the lens and the operator, both the camera and the operator being thus hidden from the sitter.

155. Portable Stand Cameras. Cameras for technical, architectural, and landscape photo-

graphy and for outdoor groups may be divided into two principal types : Square bellows (Fig. 129A) and taper bellows (Fig. 129B). Rigidity is more easily obtainable with the former. The swing front of the taper bellows type must be used with extreme caution, for any inclination of the camera front tends to cause the lens to work at the edges of the field over which it covers sharply, i.e. under the most unfavourable conditions. As a matter of fact, the front swing should never be used by itself ; its purpose is to permit a considerable rise or fall of front by tilting the baseboard of the camera and then bringing back the front and back into the vertical.

The essential conditions that must be fulfilled by portable cameras are comparatively small bulk and weight, great rigidity even at full extension, and a satisfactory parallelism between front and back. The lens should be capable of being used well above or below the central position.[1] The vertical swing, which is of little advantage when photographing groups, becomes useful in landscape work, and necessary in architectural or technical photography. It must allow of an inclination of at least 15°. The side swing can occasionally be used with advantage, e.g. in reducing the convergence of horizontal lines in architectural photographs taken with a wide-angle lens, or in avoiding the use of a very small stop in taking views of a street with one row of houses much nearer than the other. The maximum and minimum extensions available will be decided by the focal lengths of the lenses which it is intended to use, bearing in mind that in technical photography, the photographing of small objects " same size " (extension of twice the focal length) often needs to be done with lenses of comparatively long focus in order to avoid an unpleasant perspective. In extreme cases, the available extensions can be varied by using extension or recessed tubes or boxes, enabling the lens flange to be placed at some distance in front of the camera front or within the bellows at some distance behind the front.

The baseboard must be fitted with a circular spirit level or with two tubular levels fixed at right angles to each other (T-level). When the camera has a swing back it is advisable to fix a plumb level to the back.

To allow of two subjects being taken on the two halves of a single plate, a groove is sometimes provided in the camera back. A piece of black card can be slipped in to mask the half of the plate to be shielded whilst the other half is being exposed. To permit of stereoscopic pictures being taken on a single plate, some cameras are fitted with a partition, made pleated like a camera bellows, and guided between elastic cords. It is fastened to strips of wood, which in turn fit into recesses in the camera front and back.

The sizes in which cameras of the above pattern are most generally used for commercial photography and groups are whole-plate ($8\frac{1}{2} \times 6\frac{1}{2}$ in.), 10 × 8 in., and 12 × 10 in.

All the above cameras have square bellows and a reversing back.

For the sake of reduced weight and bulk, the stand camera for amateur use is almost always made with taper bellows, as shown in Fig. 130. While less rigid than the square-bellows pattern and less satisfactory in affording proper parallelism of front and back, it embodies all the movements of the heavier model, and, in the case of some of them, to a greater degree. The size of this light-model camera which is by far the most largely sold and used is $6\frac{1}{2} \times 4\frac{3}{4}$ in. Larger sizes, e.g. $8\frac{1}{2} \times 6\frac{1}{2}$ in., 10 × 8 in., 12 × 10 in., etc., are made, but the smaller, $4\frac{1}{4} \times 3\frac{1}{4}$ in., and $3\frac{1}{2} \times 2\frac{1}{2}$ in., are now seldom used.

In the use of cameras for technical or architectural photography, it is advantageous to focus on a ground glass ruled in squares, which allow the operator to judge the verticality of upright lines and the size of particular parts of the subject. For landscape work it may suffice to rule on the screen two vertical and two horizontal lines dividing the sides into three equal parts, this plan serving to set out the strong and weak points of composition. The frame of the focussing screen is usually hinged to the camera.[1]

156. The dark slides employed with portable stand cameras are generally of the double pattern, with rigid shutters. There are also, at least in the $6\frac{1}{4} \times 4\frac{3}{4}$ in. size, single metal holders, as commonly used for hand cameras. By virtue

[1] To compensate for insufficient amount of rise or fall, the lens-flange may be fixed above or below the central position on the lens panel ; and when using a camera of larger size than the negatives being taken, the carriers for the dark slides may be cut to serve the same purpose.

[1] It is advisable to sew tapes to the focussing cloth, so that it can be tied to the camera for work in the field ; a further facility is one or two lead weights sewn into the corners of the cloth.

of their construction, double slides with curtain shutters (as popular in France) afford a better protection of the plate against entrance of light whilst the slide is being carried or is in use, for both plates are completely enclosed by he two curtains, and when one of the plates is uncovered, the curtain that is drawn back slides over the other, thus giving the plate not being exposed a double protection.[1]

In slides with rigid shutters (solid or hinged) the light-tightness[2] of the sliding shutter is ensured by an elastic packing of thick velvet pressed against the slide by springs. After long use, wear of the velvet may cause a falling-off in the efficiency of this light-trap, for which reason it is customary to protect the slides by carrying them under the focussing cloth and by keeping the cloth over the slide when drawing the shutter and making the exposure.

Double slides with rigid shutters are of two patterns. In current French makes a plate is introduced after drawing the corresponding shutter, the plate being kept within the rabbets by turn-buttons; in *book-form slides*, as commonly used in Great Britain and the United States, the frame is made in two parts hinged together. The plates are loaded without drawing the shutters or touching the film side. After one of the plates has been put in, a partition of blackened metal is turned down over it and secured by turn-buttons, and the whole is then folded over the other plate in its bed. This great convenience in loading is unfortunately sometimes offset by a drawback; in the event of any warping of the wood used in the construction of the hinged frame, the light-tightness of the latter is pretty certain to suffer.

Numerous devices are employed for attaching the slides to the camera. The best are those in which any sliding movement is avoided, since there is the risk of the camera being shifted when the slide is being put in or taken out.[3]

[1] Curtain slides should not be left lying about with the curtains withdrawn. The free edge of the blind has then nothing to hold it in place, and the very thin wood is liable to get out of shape, thus preventing the easy closing of the curtain. To ease the movement of the curtains in their grooves neither soap nor oil should be used; the proper lubricant is graphite (soft lead-pencil) or paraffin wax.

[2] Shutters of ebonite or thin wood sometimes let through their substance enough light to fog plates in a slide which is left exposed to full light for a considerable time.

[3] All slides should be numbered on each side for subsequent identification of the negatives. If possible, a plate of ivorine should be let in; on this, such notes as the brand of the plate, etc., can be written.

157. Tripod Stands. For heavy apparatus it is unfortunately difficult to obtain stands which are sufficiently rigid for the long exposures that are sometimes needed and that are also comparatively light in weight and easy in manipulation. The legs are often too short and too flexible, and the top is often too small for adequate support of the camera.

In our opinion, the most practical model (despite its weight) is that known as the "double box," in which each leg consists of two wooden channel pieces sliding in each other, without any hinge or joint other than the one connecting each leg to the top. The bottom limb is solid, and slides in the inner channel or "box." Set-screws enable the amount of slide to be fixed at any intermediate point desired. The best length of leg at full extension is 64–72 in. This height enables the lens to be at eye-level after the legs have been splayed out as desired. Tripods of this pattern are occasionally made for a much greater height.[1]

The tripod with detachable folding legs and metal top (which latter is sometimes incorporated in the camera itself as a turntable) takes longer to set up, and allows no variation of the height except by splaying the legs out more or less, which obviously gives little latitude. Light tripods with folding legs always tend to give at the joints and are therefore suitable only for cameras not larger than half-plate for outdoor use only, that is to say, usually with short exposures.

While manufacturers have apparently accepted the decisions of International Congresses as regards the standard of the thread of the tripod-screw, it is not at all infrequent to find that a tripod-screw by one maker fails to fit the bush of a camera by another.[2]

Whatever the bellows extension used, the camera must be well balanced on the tripod.

[1] Passing mention should be made of the "ladder-stand," in which there are two sliding ladders with ledges, one for the photographer and the other for supporting a movable platform on which the camera is placed. The view-point is thus raised 9 or 12 ft. above the ground.

[2] The International Photographic Congress of 1889 (the decisions of which have not been accepted by English-speaking countries) adopted the screw known as "$\frac{3}{8}$ in. Whitworth"; outside diameter of the male screw 9·5 mm., pitch 1·6 mm.; the section of the thread is an isosceles triangle with an angle of 55° at the apex, this apex being rounded on a radius equal to one-sixth the height of the triangle. Male and female gauges of this thread are deposited with the *Société Française de Photographie*.

For this the camera should be fitted with several bushes arranged so that the one affording the greatest stability may be chosen.

The steel points with which tripod legs are shod tend to slip on pavings and polished parquet floors, and may damage carpets on which they are used. Slipping may be prevented by placing on the ground, in the shape of a three-pointed star, three chains joined to a ring in the centre ; the points of the tripod are placed in the links at a suitable distance from the centre. The points may even be tied to each other with a piece of string. When working on a carpet, a three-pointed star made of thin lengths of wood is of great service. Each length is connected to the others at one end (this being the centre of the star), notches being provided near the free ends to receive the points of the tripod legs. This fitment is also exceedingly useful on pavings or polished floors, as it allows of the camera and stand being moved as a whole without disturbing any adjustment of the camera, as regards level, which has been made in composing the subject.[1]

It is often advantageous and sometimes necessary to be able to tilt the camera without moving the tripod. This can be done by means of a tilting-head fixed to the tripod-top and to which the camera is secured. *Ball-and-socket heads* are suitable for light cameras, provided a *wooden* ball of rather large size is used.

When photographing extended panoramas at successive exposures, the prints from which are subsequently to be joined up, it is of service to be able to rotate the camera on a vertical axis through an equal angle each time. For this work a panoramic top is used ; there are several commercial patterns intended particularly for light cameras.

158. Camera Cases. For carrying cameras and their accessories, use is generally made of waterproof cases of canvas or leather, lined with soft baize. Canvas cases intended for almost daily use should have the edges, folds and seams bound with leather. Strips of wood or metal studs must be fixed so as to project considerably from the bottom, in order to protect the latter when the case is put down on wet ground. Straps, particularly those for carrying the case on the back or slung across the shoulder, should be of real leather, and their width must be the greater as the weight is heavier. In the half-plate size, the camera, dark slides, and accessories, such as focussing cloth, are often all packed in one case. It is then advisable to have a long narrow case in which the camera and the slides are arranged side by side. For larger sizes it is best to have two cases, one for the camera and the other for the slides and accessories. In the case for the tripod, space should be provided for accessories such as the fitment for preventing the tripod points from slipping and the holder for a magnesium flash-lamp for interior work. Every camera case which is likely to be left in the care of others should be fitted with lock and key.

159. Hand-stand Cameras. A type of camera which occupies a mid-way position between those for use on a stand and those employed in the hand, is that which has been perfected by one or two makers of high-class cameras in England. In general design the camera resembles that shown in Fig. 130, but the back is made considerably deeper and the baseboard is solid, and hinged to the back, so that, in the closed position, all the moving parts are contained, as it were, in a box. These "hand-stand" cameras, as they are called, are fitted with finders and focussing scales for use in the hand, and with bush for attachment to a tripod. As regards movements, such as extension, rise and fall of front, swing back, etc., they leave nothing to be desired, and the various models on the market in England are examples of design and workmanship of the most perfect kind. These cameras are chiefly used in the $4\frac{3}{4} \times 3\frac{1}{4}$ in. and 5×4 in. sizes ; infrequently in half-plate size. In the case of at least one make this pattern of camera is made in $3\frac{1}{2} \times 2\frac{1}{2}$ in. size.

160. Cameras for "While-you-wait" Photography. Brief reference may be made to the cameras (using ferrotype plates or post cards) with which is incorporated a box in which developing and fixing are done, the operator introducing his arms in sleeves of opaque material fixed to the camera, and secured round his arms by elastic bands. Others, for the production of real post cards, are fitted with a copying bench of simple construction, which folds down along the tripod while the photograph is being taken, and is then erected in correct position to hold the still wet paper negative when copying it on another post card as a positive.

We may further mention various types of automatic or semi-automatic machines usually operated by the insertion of a coin. These comprise a cabin with a fixed seat for the sitter and

[1] The tripod points are sometimes fitted with rubber shoes hollowed in the form of suckers.

containing an arrangement for artificial illumination, a camera recording successively several pictures on a strip of sensitive paper and usually also a device for developing, reversing, and drying, or for copying the developed and fixed image by projection on another strip and then processing this positive strip.

161. Testing of Cameras. Newly acquired cameras need testing, and such examination is also necessary from time to time with apparatus in service. The following points need attention—

Absence of play after the various parts have been set in position; parallelism of the front and back, tested with a square; the two parts require to be perpendicular to the long sides of the baseboard;[1] agreement in register between the focussing screen and the dark slides; absence of reflections from the inside surfaces, which must be covered with a dead matt varnish; and absolute light-tightness of the camera and slides.

In order to check the register between the focussing screen and the dark slides, place a glass plate in the dark slide and fit the latter to the camera. Unscrew the lens and introduce a rod fitted with a sliding cross-piece that can be clamped. The tip of the rod is pressed against the surface of the plate, and the cross-piece is pushed against the lens flange and clamped at that point of its travel. The dark slide is then replaced by the focussing screen, and all that is necessary is to see that the tip of the rod touches the surface of the screen when the cross-piece is again placed against the flange. When the focussing screen and dark slides are fitted to the camera in the same manner, it suffices to see that they have the same register.

[1] In the case of small cameras the parallelism of the focussing screen and of the surface of the lens-board on which the lens-flange rests may be tested directly as follows: On the points of three screws projecting from a board placed more or less horizontally, level a sheet of glass of a size closely similar to that of the focussing screen. After testing the horizontality of the glass by two cross-readings of a level, remove the glass and place the camera on the three screw-points, causing it to rest on its focussing screen. Then place the level in two cross positions on the lens flange or on the front cell of the lens, and see if the bubble indicates horizontality.

To do this, use a thick wooden rule of perfectly flat surfaces, through the middle of which a screw has been placed so that it can be screwed in or out at will. The rule is placed across the front of the frame of the focussing screen and the screw is turned until its point just touches the ground surface. Plates are now put in the dark slides, and the rule is placed across the latter. If the register is correct, the point of the screw will touch the glass surface without pressing the plate back on the springs that hold it against the stops.

To see whether the camera is light-tight, take it into a dark or dimly-lit room and put an electric lamp inside it, first through the aperture in the lens board, a dark slide being in position, and then through the back of the camera, the lens being in place and capped. The opening through which the lamp has been introduced must be closed with the focussing cloth, and a careful inspection then made to see if any rays from the lamp can be detected escaping at the folds and corners of the bellows or at the various joints.

The light-tightness of the slides can be tested only by photographic tests, viz. by loading them with plates (or, more cheaply, with bromide paper backed by a piece of card or a glass plate) and then exposing them for a considerable time to light (preferably sunlight) in all possible positions. The slide is then placed in position on the camera, the lens capped, the shutter withdrawn, and the camera left exposed to full light. Plates or papers subjected to the above treatment should not show more general fog than material taken directly from the packet and developed at the same time, nor should they show local fog. Of course, the number of the slide will have been marked on each plate or sheet of paper, so that the defective slide may be identified and the fault located.

These tests must always be supplemented, and may even be replaced, by practical tests with the camera under normal conditions of use. As a rule, no new and untried instrument should be used for any work which is of special difficulty or cannot be repeated. It is especially inadvisable to start on any trip, still more so on any long journey, with a camera which has not been thoroughly tested.

CHAPTER XIV

HAND CAMERAS

162. General Notes. Owing to the great variety of hand cameras, a detailed description of them would demand more space than is warranted by the interest of such an account, which would to a large extent be a repetition of the catalogues of makers and dealers. We shall therefore restrict ourselves to some notes on the principal types in use at the present time,[1] and to the description of some of the essential parts.

The first thing to emphasize is that a cheap camera, if handled intelligently, can yield quite as interesting and artistic photographs as those taken with a costly instrument. The superiority of the latter lies in the fact that it permits of a larger range of subjects being tackled, and allows of exposures being made under conditions where the owner of a cheap camera would have to abstain from taking a photograph. But the beginner stands a much better chance of success with a very simple camera, one with the least number of adjustments, than with one of many movements, some of which may be overlooked and others used wrongly.

Let us, however, note that some makers have recently developed, especially in the very small sizes (3×4 cm. and under), various patterns embodying the automatic linkage of various components and various safety devices, leaving only a very few manipulations or adjustments to the operator, thus removing almost all possibility of faulty manipulation. Such devices include the coupling of a range-finder with the focussing adjustment, the correction of finder parallax (§ 169), the linkage of the shutter and iris diaphragm adjustments [either checked or actually governed by a photo-electric cell (§ 326) with correction in case a light-filter carried on a swinging arm is placed before the lens], the automatic changing of exposed film, the linkage of this changing mechanism with the setting mechanism of the shutter, the bolting of the shutter until the exposed film has been changed, the return to normal adjustments (closed shutter if it has been left open after exposure, return of the shutter to "instantaneous" marking, return of the iris to full aperture, removal of the light-filter from the lens) by the act of closing the camera, the automatic return of the exposure counter to zero when the loading door is opened.

163. A prime consideration in the selection of cameras for use in hot and very damp climates, particularly in the tropics, is the choice of the material of which they are made.

Many modern instruments, especially of very small sizes, are built entirely of bare or lacquered non-rusting metals or alloys, or with bodies moulded in materials which, like bakelite, are not affected by the worst atmospheric conditions. Hot, damp air tends to cause leather coverings and bellows to become detached, to warp the wood (and often to separate the glued joints), and to rust all fittings of iron or ordinary steel. Attacks by insects complete the destructive effect of damp air on leather bellows.

Teak is one of the few woods that resist such climates. All parts must be screwed with brass screws. The wood should not have a leather covering. The shutters of the dark slides must never be of the curtain or hinged types, for the wooden strips may come unstuck. Single slides or changing boxes of almost rustless metal (special steels, nickel, German silver, aluminium) should be used exclusively. The shutter should preferably be of simple construction, without parts of iron or ordinary steel, and easy to repair in case it gets out of order.

164. Miniature Cameras. Since 1925 there has been a marked tendency to adopt smaller and smaller sizes, sometimes indeed beyond reasonable bounds (a camera was built for 9×12 mm. pictures on roll-film 16 mm. wide!). This reduction in size, involving a considerable decrease in bulk and weight, has been very favourably received by amateurs and even by a fair number of professionals. It is indeed justified for various technical reasons.

[1] We may, however, mention as a curiosity some of the very small or disguised cameras introduced about 1890 as a departure from the very bulky instruments employed until then, viz. the *photo-cravat*, in which the lens was the head of a tie-pin; the *watch*, in which the lens was mounted in the winding-stem; the *walking-stick* or *umbrella* handle; the *bowler* felt hat; *book*; *hand-bag*; *revolver*; the *binoculars*, or *binocular case*, the photograph being taken at right angles to the apparent line of sight. We may further mention a German camera for detection work of fairly recent manufacture, in which the film is carried in a hollow waist belt, the lens forming one of the waistcoat buttons.

On the one hand, progress in the manufacture of sensitive emulsions has made it possible to obtain without any great loss of speed images of fine grain (§ 196) lending themselves to much greater degrees of enlargement than previously admissible.[1] Further, an appreciable saving results in the cost of sensitive material, the only negatives that are enlarged being, of course, those of some value. On the other hand, it is known that at one and the same relative lens aperture the depth of field increases as the focal length of the lens becomes shorter. Finally, it is thus possible to use lenses of ultra luminosity, designed chiefly for the cinema industry, and obtainable only in short focal lengths.

The use on several of these cameras of interchangeable lenses of very diverse focal lengths (ranging from 2·8 to 50 cm. on a 24 × 36 mm. camera, for instance) raised difficult problems in ensuring in all cases precision in the indications given by the finder and the range-finder. While it is possible to accept a fairly rough construction in the case of cameras giving pictures usable without enlargement or with only a moderate degree of enlargement, miniature cameras must be of an extreme optical and mechanical precision. They are therefore necessarily high in price. Such precision can only be obtained in a rigid, non-folding instrument (see also § 166 and 176).

As a rule no provision is made for a rising front in these cameras. It may therefore be necessary to tilt the camera when taking the photograph, the perspective being then corrected (§ 743) when enlarging.

165. The Chief Types of Hand Camera. Hand cameras may best be classified according to their general shape. We shall therefore divide hand cameras into rigid and folding patterns, without considering for the moment whether they are for use with plates or with films, and specially for the reason that many can be used with all kinds of sensitive material.

Rigid cameras comprise box cameras of very simple construction intended for beginners: the French type known as *jumelles* (of square pyramid shape) which about 1900 were the most perfect form of hand camera, miniature cameras of high precision, and also the majority of reflex cameras (§ 176) and instruments derived from them.

Folding cameras are of three main types: (*a*) folding cameras that differ from the hand-stand cameras (§ 159) already described merely by their smaller dimensions and lighter weight, the hinged baseboard forming a protective cover when the camera is closed; (*b*) folding cameras with self-erecting front in which the lens board is automatically placed in position and returned into the camera body by means of jointed levers with spring catches, when the baseboard is opened and closed; (*c*) cameras usually known as Press cameras, without a protective cover, the opening and closing of which resemble the movements in an opera hat with automatic locking in the extreme positions.

All these instruments are made for monocular photography (with one lens), or for stereoscopic photography. For details of this latter use of them the reader should refer to the chapter (XLVIII) on stereoscopy.

166. Rigid Cameras. Rigid cameras, bulky and heavy, especially when fitted with changing-boxes for 12 or 18 plates, are no longer used in medium sizes such as $3\frac{1}{2} \times 2\frac{1}{2}$ and quarter-plate except for some special purposes.

Owing to the reflection of light which may always take place from the walls of box cameras, and especially those of the jumelle type, due to their angular shape, it is essential that the walls be a perfectly dead black. This is usually done by lining them with black cloth.[1]

Miniature cameras using roll-film or ciné film are usually fitted with a focal plane shutter. This facilitates the interchange of various lenses as well as the linkage of the mechanism setting the shutter and that winding the exposed film. As the slit can travel very close to the sensitive surface the efficiency is excellent, and the use of a narrow slit gives the fast exposures demanded by the lenses of great luminosity.

The very slight depth of field of the large aperture lenses usually fitted to these cameras and of the long focus lenses sometimes employed on them would render illusory any focussing by judgment of distances, so that these cameras must be equipped with range-finders (§ 173), and

[1] These advances were first applied to cinematographic film, hence the choice by several makers of standard 35 mm. ciné film for loading their cameras.

[1] In certain cameras not fitted with a rising front, particularly those for *aerial photography* and other patterns intended for photographic *records of wild animals*, all of which are usually fitted with lenses of very long focus illuminating a field much larger than the plate, protection against excessive light calls for a number of partitions (inside the camera), each with an aperture permitting only the useful rays to pass.

Cameras of the rigid type are the only ones suitable for use in an aeroplane, for no folding camera, however rigid it may seem, can resist the wind pressure acting on any object held outside the fuselage.

in order to allow of photographing subjects in rapid motion it is necessary that the adjustment of the range-finder be coupled with the focussing adjustment, so as to avoid having to read off the distance in the range-finder and then regulate the focussing accordingly.

167. Folding Cameras. The essential advantages of folding cameras are their small bulk and their extreme lightness—features which are sometimes obtained at the expense of convenience in handling and of rigidity after a period of use.

On cameras of this type the rising-front movements are generally limited, owing to the small size of the front and of the taper bellows. After raising (or lowering) the lens, it is necessary to centre it again before closing the camera. Closing must always be done gently, especially if one is not accustomed to this operation, for the space available within the casing is very stinted, and if all the fitments (finder, release) do not occupy the exact position assigned to them, thus preventing the baseboard from closing, any force is bound to injure some parts.

With most cameras, the front must be pushed right back into the rear body on to runners that form the continuation of those on the baseboard. When the camera is opened, it is therefore necessary to pull out the front up to the stops, which latter are usually at the "infinity" position. To do this, the front is drawn forward by finger grips on the carriage, these acting as clamps when the carriage is in position.

In the Press pull-out type, with stretcher-struts, the accordion-pleated bellows is sometimes replaced by a leather bag completely open at the extended position. The bellows are to be preferred, for the folds stop very oblique rays not used in forming the image, and are not likely to reflect them in the direction of the sensitive surface. When opening or closing these cameras the front and the back should be kept as parallel as possible in order to avoid bending the jointed levers. Cameras with folding levers are generally opened by a slanting pull, but care must be taken that both the levers of a pair are working together, in order to prevent them from being bent.

As a rule these cameras allow of ample rise of front.

Hand cameras of the folding type are generally made in sizes up to postcard ($5\frac{1}{2} \times 3\frac{1}{2}$ in.). Press cameras are made up to $6\frac{1}{2} \times 4\frac{3}{4}$ in.

168. Focussing of Hand Cameras. With the exception of box cameras and the majority of film cameras, hand cameras are fitted with a focussing screen,[1] interchangeable with the slides or changing boxes and allowing of accurate focussing when the camera is used exceptionally on the tripod. But, except in the case of "reflex" and "twin lens" cameras (§ 176), direct focussing is impossible when the camera is used in the hand. The extension of the camera must then be brought to the proper distance by means of a scale (§ 88) graduated in distances of the subject.[2] It then suffices to bring the bevelled edge of the pointer on to the mark corresponding with the distance chosen.[3]

With box cameras, with most jumelles, and with the Press cameras, focussing is done by moving the lens in a helicoidal mounting (§ 112). In the folding cameras with lazy-tongs and "scissor" levers the variation in extension is generally obtained by restricting more or less the opening of the levers by an adjustable stop linked to a bolt actuated by a screw fixed in the rear body, the stop drawing with it the pointer placed against a focussing scale.[4]

The range of extension thus obtainable is very limited, so that these cameras are not suitable for use with lenses other than the one which the maker has fitted. At the most, they may be fitted with a rigid or folding rear extension, put in place of the dark slide, which is then fitted to the other end of the extension-piece. By this means it is possible to use one element of a combinable lens (§ 104) or lenses of greater focal length than that fitted to the camera.

Cameras of the folding type, especially those with double extension, afford fair scope in focussing and allow of small objects being photographed, or of the use of one element of

[1] To avoid the necessity for carrying a focussing cloth, the screen is usually fitted with a flexible hood which shields the screen from most of the surrounding light.

[2] In cameras of British and American makes the scale in metres is accompanied by one in feet. It is always well to test the scale of a new instrument.

[3] We are not dealing here with "fixed focus" cameras (§ 87), in which the depth of field can be increased only by reducing the lens aperture, in the absence of a supplementary lens (§ 118) suited to the distance of the subject and placed on the camera lens.

[4] It would be a very good thing if the focussing scales of cameras intended for use at eye-level could be arranged so as to be visible from the back of the instrument, as commonly done on cinematograph cameras, with which the lever of the focussing mount is prolonged as a rod that projects beyond the top edge of the camera front.

the lens without any special accessories. It is possible, within certain narrow limits, to fit other lenses, but if that is done, it will, as a rule, be impossible to close the camera without removing the lens.

169. Finders. In photographing a given subject with a camera held in the hand, the instrument must be fitted with a finder enabling the photographer to see whether the subject is or is not included in the useful field of the lens at the moment when the shutter is released.

The finder may be required to indicate either only the direction in which the lens is pointed or to show exactly the limits of the field included. Let us hasten to add that in many of the cameras at present made the finder does not merit the confidence that one is led to place in it, so that the checking of the finder is a necessary precaution with any camera.

The problem of the finder is, moreover, a somewhat complex one if it is desired to solve it with desirable precision.

To begin with, we must note that except where the axis of the finder *coincides* with the axis of the lens, a condition that is fulfilled only in "reflex" cameras (§ 176), a finder which has been adjusted to indicate for distant objects the same field as that given by the lens, indicates, at very close distances, a field which is not in agreement with that of the camera, the difference increasing as the object is nearer and the axes of finder lens and camera lens are more widely separated.[1]

Another difficulty results from the rising and falling movements of the lens, which movements lose much of their value if agreement between the finder image and the camera image is not attained, at least approximately, for all degrees of rise or fall of lens.

170. Ground-glass Finders. The simplest form of ground-glass finder is used only on cheap box cameras (without rising front) and consists of a miniature box camera fitted with a bi-convex lens of focus $\frac{3}{4}$ in. to 1 in. and provided with a tiny mirror at 45°, by which the image is reflected on to a horizontal piece of ground glass, partially shielded against surrounding light by a hood which can be folded down over the ground glass when the finder is not in use. The image seen in the ground glass is very small and very dim owing to the small aperture necessary with an uncorrected lens.

[1] The differences between the image in the finder and the image in the camera are of the same order as the differences in the two images of a stereoscopic pair.

A very well made pattern of this type of finder constitutes one of the two chambers of the twin-lens cameras described below (§ 177).

171. The Brilliant Erecting Finder. In many cameras of the folding type a finder similar to that just described is used, but the ground glass is replaced by a convergent lens with a mask cut so as to show the image obtained with the camera held vertically or horizontally. If the image is not formed exactly in the front nodal point of the convergent lens, it does not remain stationary in the mask of the finder when the eye (the correct position of which is not indicated in any way) is moved. The limits of the field are therefore very badly defined; all the more so as the image usually measures not more than about $\frac{1}{4} \times \frac{3}{8}$ in. It is true that the image is very bright, so bright, in fact, that the beginner is tempted to under-expose. To allow of use when the camera is used either way of the plate, these finders are mounted on a pivot to allow of their being turned over. As the camera can be closed only when the finder is in one position, closing may result in the bending of the finder bracket, and thus destroy the agreement between the field of the finder and that of the lens, assuming such agreement to have been present in the camera as sold.

A finder of this kind is only admissible in cameras which have no rising front.[1]

Much better results are obtained in the case of a camera without a rising front used at the level of the chest, at least as concerns showing the line of sight, by using a finder formed by a concave-surfaced metal mirror of double curvature, placed at an average angle of 45° (E. Busch, 1907) with a sighting pin and sighting notch. This gives an upright and unreversed image of quite decent size (about $\frac{3}{4} \times 1$ in.), and folds into quite a small space.

172. Direct-vision Brilliant Finders. Perfect finders, at least when they are correctly mounted, consist of a frame of sheet metal or wire of the same size as the picture to be formed in the camera. These are fixed to the camera front

[1] In various cameras some regard, at least to an approximate extent, has been paid to the rising front by causing the finder to tilt either by means of a cam fixed to the lens or by hand setting in correspondence with a scale indicating the various degrees of rise.

A non-decentring finder can be of some use if its field satisfactorily agrees with that of the lens. If a given point of the subject, such as the top of a monument, touches the upper edge of the finder image, and if the camera lens is raised half an inch, we know that there will be a space of half an inch above the top of the monument in the photograph.

(on which they can be turned down when not in use) so as to follow the lens in all its movements). This *frame finder* is completed by a sight, fixed at a distance from the frame, which is always equal to the extension of the camera and in a position such that a line passing through the sight to the centre of the frame is parallel with the optical axis of the lens when the latter is not decentred (Huillard, 1900). The lack of coincidence in the foreground can, moreover, be corrected to a satisfactory degree in practice by mounting the sight on a sliding stem with a scale corresponding with the various distances of subject.[1]

Instead of fixing the position of the eye relatively to the frame by means of a sight (which is always troublesome to a wearer of glasses) a second frame may be used. This is similar to the first, but of smaller dimensions, and so placed that the straight lines joining corresponding corners of the two rectangles join together exactly at the sighting point. In this form, however, the finder no longer automatically follows the decentring of the lens. If the distance between the two frames is one-fifth of the focal distance (L. Benoist, 1897), the decentring of the larger frame must be one-fifth that of the lens. There is then no advantage in using a frame of the same size as the picture.

In order to retain the benefit of the automatic concordance of the field in the case of decentring, while reducing the size of the finder, the plan has been adopted of filling the space of the frame with a divergent lens.[2] It is necessary[3] that the divergent lens used should have a focal length equal to that of the objective, that its frame should have linear dimensions half those of the image recorded in the photograph, and that it should be placed at a distance from the sight equal to the focal length, the divergent lens being fixed on the lens front and the sight being fixed on the camera back (Gillon, 1900). This finder, unlike the one described above, does not show the same image as the lens when the extension differs greatly from the focal length.

Let us add that all the conditions set forth here, which ensure the perfection (for practical purposes) of the direct-vision brilliant finder, are by no means invariably fulfilled in all cameras fitted with finders of one or another of these patterns. It often happens that a given finder is fitted to very different cameras without any arrangement for compensating for the decentring of the lens.[1]

In some cameras the divergent lens is fixed in a convenient position, and the eyepiece is replaced by a pin which follows the movements of the lens. The centre of the field is then indicated fairly correctly, whatever the amount of rise or fall of lens (except, of course, when the subject is quite close), but the margins of the field are not exactly shown.[2]

One distinct advantage of the direct-vision brilliant finders is that, in the case of moving objects, it is possible to watch with the naked eye the oncoming moving object in the direction which at the proper moment becomes the normal line of sight.

173. Various Other Finders. Among the other finders used on some cameras may be mentioned the telescopes of the Galilean type (opera-glass) or of the astronomical type, either straight for use at eye-level or in an elbow form for use at waist-level, fitted with a graticule for indicating the centre and, in some cases, the margins of the field. The focussing of these telescopes is sometimes done by sliding a tube graduated in distances, the finder then acting as a telemeter. There is also another type of finder, copied from the *collimator*, used in artillery, but not generally popular.

The collimator finder is formed of a convergent lens, at the anterior focus of which there is a graticule, the lines of which will appear as rectangles in the extreme distance. The whole is housed in a little metal tube in one of the corners of the camera back. If one eye be placed at the collimator and the other looks directly

[1] The same result can be achieved by piercing the plate of the sight with several sight-holes, each corresponding with a given distance of the subject.

[2] The two axes, vertical and horizontal, of the frame are usually engraved on the divergent lens. The sight is sometimes fitted with a convergent lens.

[3] The proof of this fact would lead us too far. It is given by E. Wallon, in *Bull. Soc. Fr. Phot.*, 1901, pp. 121–131. It is easy to see if the finder has the required focal length by observing that a combination which is practically afocal is obtained by bringing the camera lens and the finder lens together.

[1] With brilliant finders of the divergent lens or plain-frame pattern, intended only to indicate the centre of the field of a camera not fitted with a rising front, the sighting eyepiece or pin is sometimes replaced by two crossed blades in planes parallel with the optical axis. These blades partially mask the frame unless the eye is placed in the prolongation of the straight line along which they intersect each other.

[2] In some cameras not fitted with an eyepiece, the correct field is generally seen by placing the eye on the line joining the centre of the finder lens to the pin, the cheek and nose being pressed against the back of the camera. The angle of view can also be marked on two adjoining sides of the camera.

at the subject, the rectangles of the graticule will appear on the subject itself and show the amount of view included. The lines of the graticule can indicate the limits of the field at near distances, and additional lines can show the various degrees of decentring and even a *stadimetric scale,* indicating—according to the height of a standing figure—the approximate distance of the latter from the camera.

174. Telemetric Finders. As far back as 1890 Dallinger proposed for this purpose two finders,

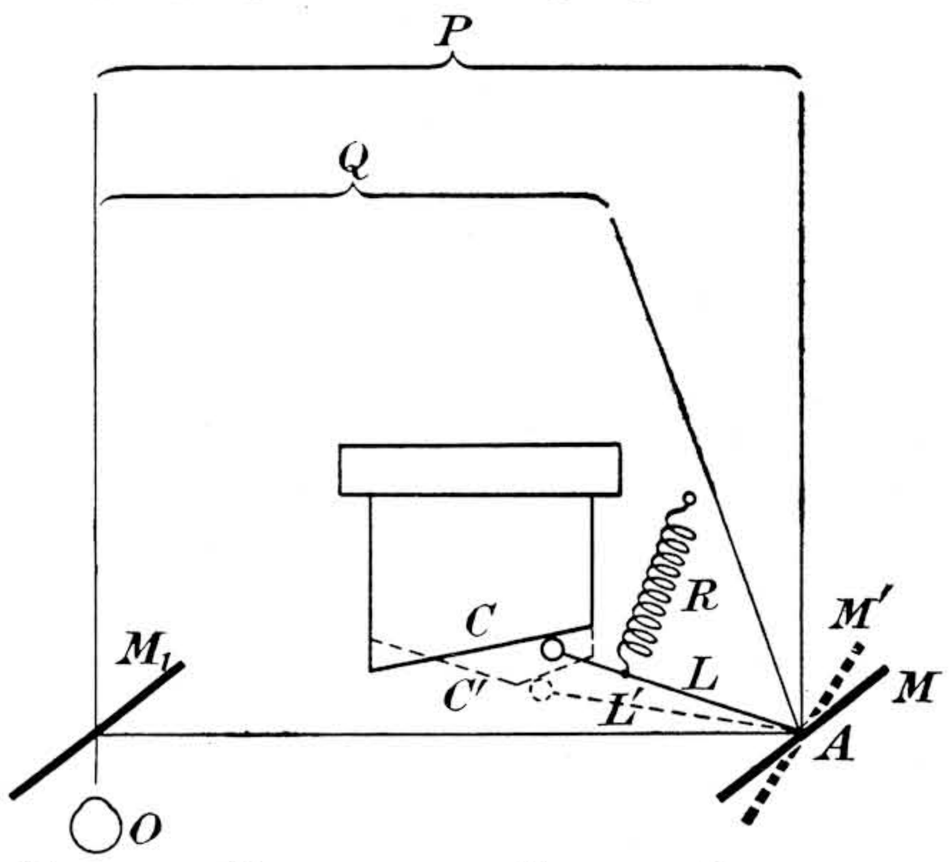

FIG. 130. DIAGRAM OF A COUPLED TELEMETER

one fixed and the other pivoting by the action of a cam linked with the focussing mechanism; the camera was correctly focussed when the subject appeared in the centres of both finders. This arrangement has been simplified by using two optical systems, suitably separated from each other, the images of which are intermingled after one has been reflected on a mirror or prism which is turned through an angle by the focussing movement. In Fig. 130, the eye O sees directly an image of the subject aimed at, and another image of the same subject after two reflections in the mirrors M and M_1. The mirror M is pivoted on an axis A and linked to a lever L held by a spring R in constant contact with a cam C cut in an extension of the intermediate tube of the helical focussing mount. The mirror can therefore pass from the orientation M to the orientation M' when the lens, first focussed on a very distant object P, is focussed on a near object Q. The camera is correctly focussed on a given subject when the two intermingled images coincide in the portion covering that subject.

The accuracy of focussing is all the greater as the base MM_1 is greater and as the subject is seen of apparently greater diameter. The range-finder, therefore, sometimes includes magnifying lenses. It can on occasion constitute a view-finder as well.

There are also on the market various types of coincidence range-finders, separate from the camera. In these, the orientation of the movable optical system is governed by a cam joined to an external knob bearing a distance scale. The distance of the subject being thus known, focussing is effected by means of the camera focussing scale.

175. Levels and Plumbs. It is absolutely necessary to be able to level the camera when holding it in the hand and sighting the subject, in order to avoid the distortion which is produced if the sensitive surface is not in a vertical plane when the photograph is being taken and the reduction in the size resulting from the trimming which becomes necessary when the camera has been slanted to the right or left.

When the camera is held at waist-height, its level can be indicated by a circular spirit level[1] or by two tubular air-bubble levels placed at right angles to each other; the levels must be placed near the finder or over it.

For sighting at eye-level, the use has been suggested of a transparent mirror inclined at 45°, showing the image of a level to the eye placed behind the finder, but the separation of the image of the level and of the image of the subject and the difference in their luminosity make it difficult to observe both at the same time. For this reason recourse is usually had to plumbs, which are needles or plummets freely suspended in the frame of the finder or along the exterior sides of this frame. These needles or plummets are pendulums of extreme sensitiveness, the oscillations of which are limited by a ring of small diameter. So long as the camera is not held perfectly level the plumb rests motionless against the ring, but immediately the camera is level the plumb hangs without touching the ring and oscillates owing to the unconscious movements of the body.

Any camera that can be used for both vertical and horizontal views should be fitted with two levels and two plumbs.

[1] The spirit in the air-bubble levels tends to evaporate by the join between the concave glass that forms the cover and the metal body of the level. Levels have been made in which a steel ball rolls on a concave surface, but the ball is too mobile unless immersed in a viscous fluid such as a mixture of water and glycerine.

176. Reflex Cameras. The reflex camera, first suggested by Sutton in 1861 and made in practical form by C. R. Smith in 1884, only became popular about 1900, and for a long time was constructed only in a form similar to that of box cameras. At the present time there are folding models, made to meet the objection of bulk often advanced against this type of camera, unless of small size. The principle of these cameras is shown in the sectional diagram (Fig. 131). When the camera is not in use, the plate *P* is covered by a focal plane shutter.[1] The rays from the lens *O* fall on a mirror arranged at 45° in the plane bisecting the angle between the sensitive surface and the ground glass *D*, which latter is shielded from surrounding light by the hood *C*. In these conditions, if the lens is in such a position that a sharp image is formed on the sensitive surface *ab*, the reflected image *a'b'* will also be sharp on the ground glass and vice versa ; the image on the screen is the right way up, although the wrong way round.

As reflex cameras cannot be used conveniently except in their normal upright position, they are usually fitted with a square reversing back, which carries the dark slide in one or other position. In some of the more highly priced models the rotation of the back automatically operates a mask, which thus shows an upright or oblong picture on the ground glass. Otherwise the latter is clearly marked with the edges of the upright or oblong picture. There is usually only a vertical rise and fall of front. The usual sizes of reflex cameras range from $3\frac{1}{2} \times 2\frac{1}{2}$ in. to $6\frac{1}{2} \times 4\frac{3}{4}$ in. As the camera is hardly ever carried in a case, the lens is protected by a rigid flap of wood or metal, which can be set at various angles and serves as a sky shade.

The camera, which is often hung from the neck by a strap, is held in both hands, one actuating the focussing knob while the subject is being followed on the screen. When it is judged that the favourable moment has arrived for taking the photograph, the release which frees the mirror is pressed. Actuated by springs, the mirror rises to the position *M'* against stops, thus effecting a light-tight closure of the upper portion of the space within the camera. At the moment that the mirror reaches the position *M'* it releases in turn the focal-plane shutter, which uncovers the sensitive surface for a time fixed by the speed setting.

[1] Some reflex cameras are fitted with a lens shutter, the mirror protecting the sensitive surface sufficiently while the image is being sighted.

To set the camera for taking another photograph the mirror is allowed to return into position, by releasing a lever, which also resets the shutter.

An ordinary mirror, silvered beneath the glass, would produce a double image on the focussing screen, and cannot therefore be employed in a good instrument, as the finest focussing is not possible. The silvering requires

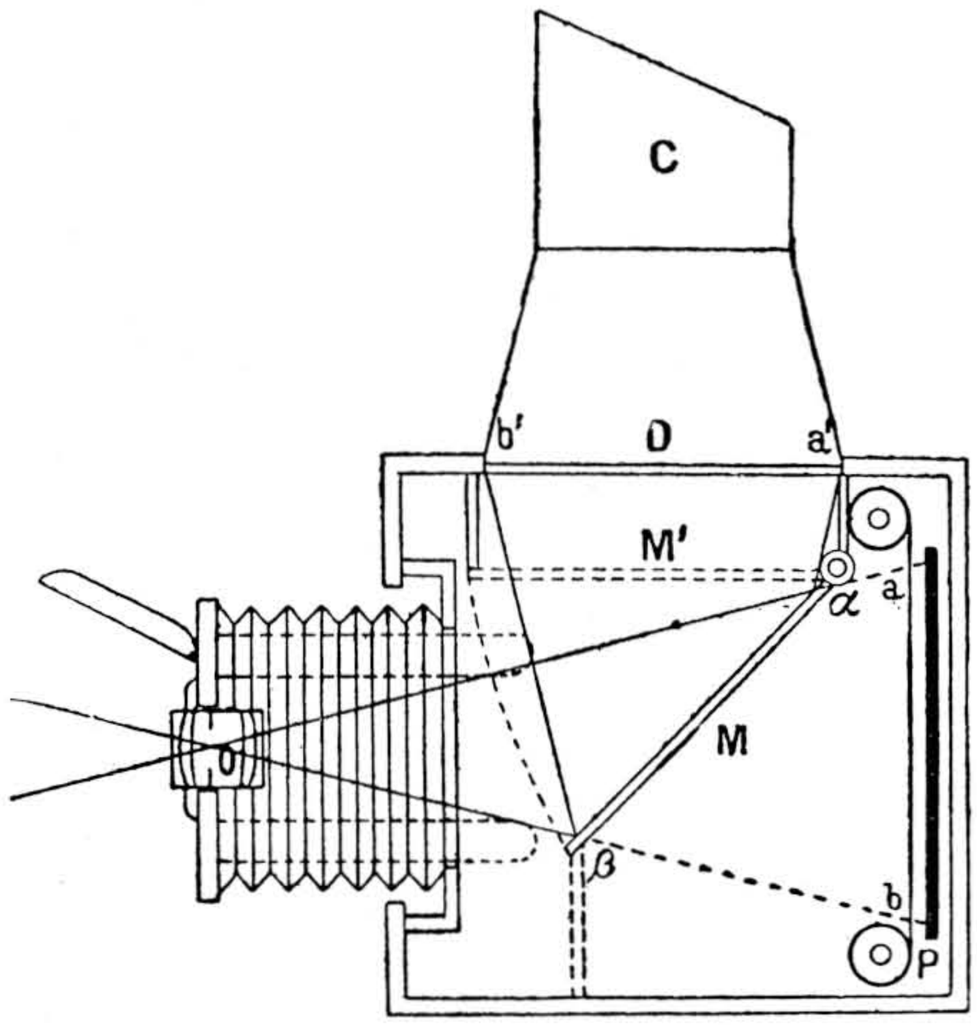

FIG. 131. REFLEX CAMERA

to be on the surface of the glass presented to the lens, and is usually protected by a very thin coat of varnish, which does not interfere with its optical performance. To avoid occasion for the re-silvering of the mirror, care must be taken not to finger or rub the surface. Any dust that may settle on it should be removed very gently by means of a clean and perfectly dry brush. On some cameras built recently a mirror of stainless steel has been fitted.

The advantages of a reflex camera are obvious. The image seen on the screen at the actual instant that the exposure is made is of the same size and has the same limits as the picture taken, whatever the camera extension and degree of use of the rising front. There is no finder which affords this facility.[1]

[1] Focussing is more easily done at the full aperture of the lens, but it would be contrary to the very principle of the reflex to require the operator to turn the camera round to set the lens aperture for the necessary depth of field. Some makers have provided a special form of iris diaphragm for this contingency. The lever of the iris is kept constantly pressed by a

The range in extension is sufficient to allow of some latitude in the choice of a lens, an advantage that is offered by scarcely any other hand camera. This latitude is increased by the fitting of an extension piece to the camera front (some cameras are specially built for lenses of very great focal length), but the use of the reflex is incompatible with the use of wide-angle lenses on account of the necessity of leaving a clear space for the passage of the mirror. In the case of a $3\frac{1}{4} \times 4\frac{1}{4}$ in. square reflex, the shortest focal length which can be used is 6 in., or a little less if the camera is built for oblong pictures only. The chief objection to the reflex camera is the practical impossibility of using it at eye-level. To meet this difficulty, some makers fit a sighting hood arranged horizontally above the ground glass and fitted with a mirror at 45° to the latter. The picture on the ground glass may thus be seen in the mirror.

It is curious to note that in the minds of many amateur and professional photographers the reflex is regarded as specially intended for Press photographers and, generally, for the photography of rapidly-moving objects. Yet specialists in these two branches of work consider it unsuitable, and prefer to use cameras of the folding focal-plane type. It is difficult, on the one hand, to work at waist-level in a crowd, and not all reflex cameras can be held upside down for use above the head. On the other hand, the space of time during which a figure subject appears well placed, or during which a rapidly-moving subject passes at the right distance, is often too short to allow of any re-adjustment of the focussing, so that the reflex thus loses its principal advantage.

Nevertheless, the reflex is the best hand camera for the great majority of photographic work, artistic and scientific and especially for the photography of animal subjects. Its only disadvantages are its price, necessarily high in view of the complexity of its mechanism, and —in the case of box models such as the one in Fig. 131—its bulk and weight.

177. Twin-lens Cameras. The method of focussing a rigid or folding camera by means of an auxiliary lens of the same focal length as the main lens, but less fully corrected, was used in the past, but was abandoned almost at once as being very cumbersome at a period when plates of size under 7 × 5 in. were scarcely used. This idea has been successfully revived in some film cameras of miniature size, in order to give the user the same facilities that a reflex would give, a reflex being difficult to build with such short focal lengths as are usually employed. The auxiliary camera is then of the reflex type, but with a fixed mirror.[1]

The differences in the framing of the two images are then compensated for by decentring or swinging the auxiliary lens, or by moving a mask under the ground glass, all such adjustments being actuated by the focussing movement so as to ensure the coincidence of the fields included in the plane of space-object conjugate to the plane of the sensitive emulsion.

To facilitate the examination of the image the customary ground glass is sometimes replaced by a plano-convex lens of which the plane surface is finely matted, the lens then acting as a collecting lens (the marginal rays being thus turned towards the observer), and as a magnifier. A focussing glass is sometimes carried by a movable arm inside the hood.

To reduce the depth of field of the auxiliary lens and thus permit of more accurate focussing, this lens is sometimes of a relative aperture greater than that of the main lens, or it may even be of greater focal length in spite of the mechanical difficulties presented by the linkage of the focussing movements of the two lenses.

178. Sensitive Material. Hand cameras are used with plates (glass support), films (transparent flexible support), or sensitized paper (§ 230). The films may be in long strips (roll film) or in cut sizes.

Various attempts, attended with scant success, have been made to supply plates packed in such a manner that the packet can be placed in the camera in full daylight. In order not to restrict the user to the plates carried inside the camera, the number of which cannot be large without increasing the weight of the apparatus, plates are usually carried in dark slides for one or two plates, or in changing boxes for 6, 12, or 18 plates, which slides and boxes are detachable and interchangeable, and may be purchased in any number required.

Films cut in sizes are supplied either for use like glass plates, in the same slides or boxes, or in special packings called *film packs*. A

spring which tends to close the diaphragm. This lever is held against stops which can be placed at any desired point of the diaphragm scale. For focussing, the lens is set at full aperture, the lever being held by a catch which is freed by the release of the mirror and thus brings the smaller stop into operation for the exposure.

[1] For sighting at eye level a mirror that can be lifted has, however, been used, the ground glass and its hood being then placed on the back of the camera.

film pack is itself a changing box for 12 films, and only needs placing in a special adapter (film-pack adapter) interchangeable with the slides or boxes.

Roll film, formerly used in roll-holders of somewhat complicated construction, was soon issued with a str p of black paper at each end of the strip of film. These bands of black paper, in conjunction with the flanges of the spool on which the film is wound, afford full protection against light, thus permitting of loading and unloading the holder in daylight. The mechanism intended to ensure the supply of the same length of film for each exposure was soon discarded by backing the strip of film with a strip of opaque black paper bearing numbered marks visible from outside through a window of red celluloid.[1] To reduce the price of the cameras, and also to compel to a certain extent their purchasers to use roll film exclusively, the detachable roll-holder was no longer supplied, and the film magazine became an integral part of the camera. Later on, there was a reaction against the excessive specialization of these instruments, and many of them can now be supplied with adapters allowing of the use of dark slides for plates.

The methods of loading the various slides and changing boxes differ to such an extent on the cameras of various makers that a detailed description cannot be given. The instructions sent out with each camera should be followed.

179. Single Metal Slides. Although double dark slides with curtain shutters are used (in France) with some hand cameras (§ 156), it is far more usual to employ single metal slides, made of stamped sheet steel or nickel, with a metal pull-out shutter, such slides being cheaper, lighter, and more compact.[2]

Among the advantages of metal slides over changing boxes are the avoidance of any risk of jamming and the possibility of tak ng a selection of plates of various kinds or for various purposes.[1] Also, as the camera is loaded with only the one plate, it is less heavy and cumbersome when arranging and taking the photograph.

On the other hand, the changing of one plate for another is less rapid with slides than with a changing box for plates or films, and finally fog may be produced as the result of wear of the velvet plush[2] fitted to both the slide and the camera in order to ensure light-tightness after the slide-shutter has been withdrawn, especially if the shutter is replaced not squarely but by inserting one corner first.[3]

It is usually possible by means of carriers to use in these slides plates of size smaller than the normal.[4] Cut films and paper can also be used by placing them in holders, of which various patterns exist (book-form, sheath, or stretcher) or, in some cases, by the use of a metal sheet covered with a suitable adhesive.

This review of holders for plates would not be complete without a reference to the special slides or adapters intended for loading in daylight by the use of envelopes of stout opaque paper each containing one plate. The envelope is opened when the shutter of the adapter is drawn and closed when it is pushed back. In England this envelope system is widely used by Press photographers.

180. Changing Boxes for Plates. In all changing boxes for plates the plates must first be placed each in a sheath or metal frame. The plates are usually slid into grooves formed by the turned-over edges of three of the sides.

The one pattern of the old type of changing box without mechanism which has survived is

[1] When using panchromatic film the red window must be covered except during the time strictly necessary, after each exposure, to centre the next number in the window. Cameras of recent construction are fitted for this purpose with a flap kept closed by a spring (sometimes the flap only opens when the winding key is being turned). In the absence of such a flap, the outside of the window should be covered with a piece of opaque adhesive material, usually supplied with each spool of panchromatic film. Various arrangements of multiple windows permit in some cameras (fitted with removable masks) the use of roll-film for picture sizes other than the normal one.

[2] All these slides should, of course, be numbered for identification of the exposures.

[1] When plates or cut films are being used both for monochrome and colour work (Autochromes), it is best to obtain slides of blacked steel for the monochrome plates and of nickel for the Autochromes. The latter, being always used along with a black backing card, can better withstand a slide with polished interior surfaces and are more likely to be fogged by the lacquer of the steel slides.

[2] This wear of the pile can be prevented by removing the shutter when the slide is not in use.

[3] In some cases confusion between slides containing unexposed plates with those containing exposed plates may be avoided by turning the other side of the shuttes outwards when replacing it after exposure. Mention may also be made of the various devices (coloured tags, catches which automatically lock the shutter when is is replaced after exposure) for preventing two exposures on one plate.

[4] For making several successive exposures on different parts of the same plate, the simplest plan is to insert the dark slide in the usual way, to withdraw the shutter, and then to insert special shutters in which openings have been cut in the required positions (multiplying shutters, G. J. Miller, 1901).

that known as the *bag changer*. In its simplest form it is closed by a shutter and attachable to the back of the camera. It is loaded with 12 sheaths, each fitted with a small tab or handle. To the upper end of the box is fitted a bag of soft leather or opaque fabric, flexible enough to allow of the tab of the sheath containing the plate that has just been exposed being grasped from outside. The sheath is then lifted up into the bag and transferred to the back of the pile against the slight resistance offered by the springs, which keep the pile of sheaths constantly pressed against the rebate at the front of the box. In current patterns the box is provided with a lever which raises each sheath in turn up into the bag.

Nearly all the changing boxes now in use are based, with many variations, on that invented about 1890 by E. Hanau. Its working will be seen from Fig. 132. The box consists of a chamber of wood or metal in which there slides a drawer within which are 6, 12, or 18 sheaths[1] (the number varies according to the size). When the first plate in the pile (position *A* in the figure) has been exposed, the drawer is pulled out (*B*). The first plate (top, exposed plate) is held back by stops until the drawer has been pulled right out, when it falls to the bottom or is pressed there by springs (*C*).[2] When the drawer is returned (*D*) this plate passes under the pile and a fresh plate comes into position for exposure.[3]

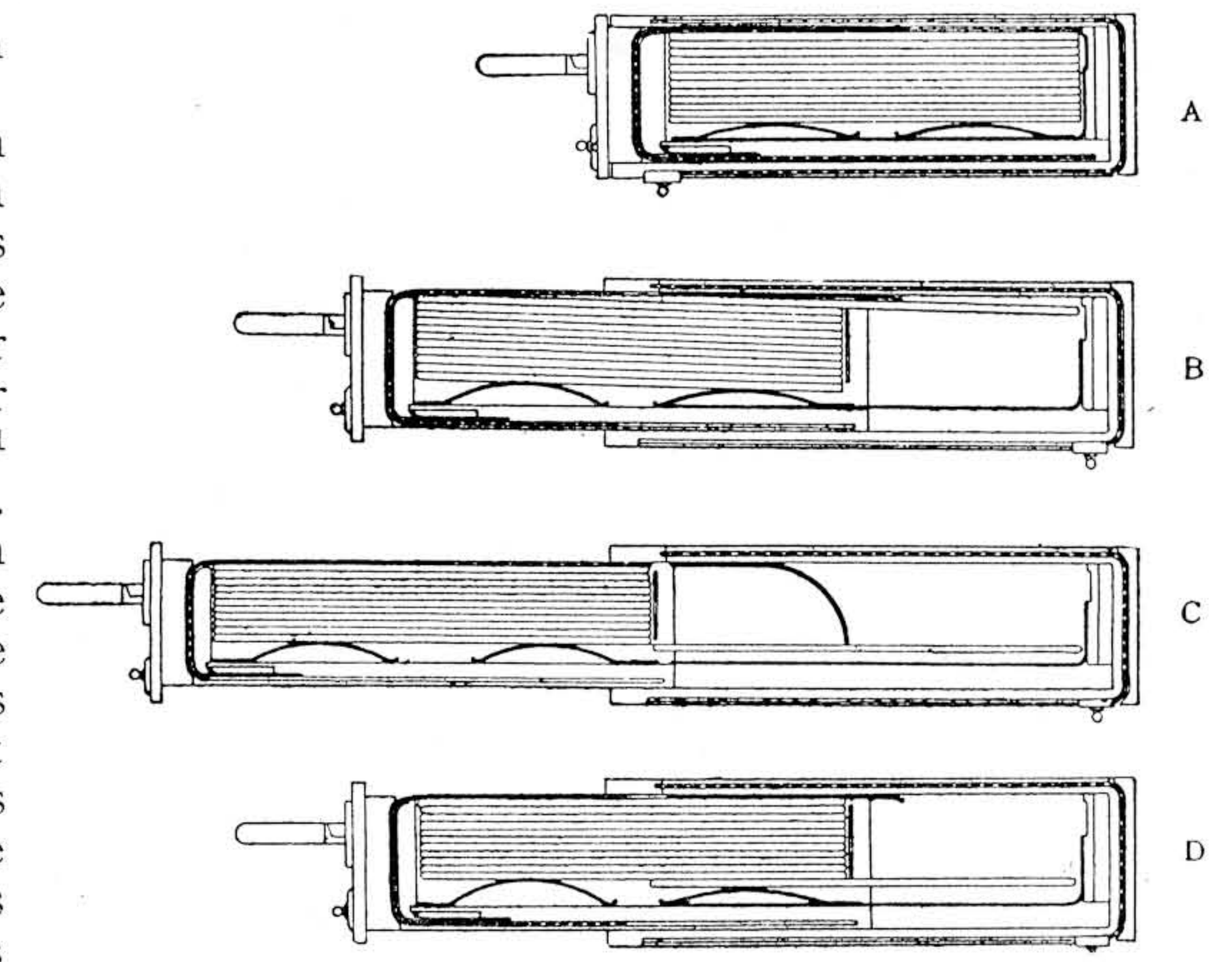

FIG. 132. OPERATION OF MAGAZINE CHANGING BOX

It will thus be seen that the working of the box depends on the drawer being pulled right out. It is usually necessary to pull it out with a smart movement, to assist the fall of the plate, but, of course, not so violently as to drag out the drawer. If the drawer is pushed back before it has been completely opened, the half-extruded sheath is likely to be bent and the plate broken, thus causing the box to jam. Jamming may also result when the sheaths are not put in according to the instructions (in some boxes the open sides of the sheaths must be towards the handle of the drawer, while in others they must be away from it), or when the sheaths have been bent. If excessive resistance is felt when opening or closing the drawer, the movement should be reversed somewhat sharply, and a second attempt then made to change the plate. *Force should never be used.*

In some boxes the drawer carries with it only one plate, putting it back under the pile. In others, the exposure must be made when the drawer is out, the sharp image being formed on the plate held at the bottom of the box. The bulk of the camera is thereby reduced by the thickness of the changing box, but the camera is not so well balanced at the instant of making the exposure. In order to reduce cost and bulk, some changing boxes are formed of two distinct parts, the loader and the cartridge. The cartridge is the drawer of the box, and it is possible to use several such cartridges,[1] each loaded with a different kind of plate if desired.

More than any other part of the camera, the changing boxes must be kept perfectly clean. On the one hand, the fall of the plates to the bottom of the box often produces fine splinters of glass, while the rubbing of the sheaths (when

[1] Some makers supply film sheaths for use with films or paper. The thickness of these sheaths is about one-half that of the plate sheaths, so that the capacity of the box is doubled. If the construction of the box is such that two of the thin sheaths are changed each time, the difficulty can be got over by loading an uneven number of sheaths, e.g. 23 or 25 in a box for 12 plates.

[2] When the plate falls by its weight alone, changing requires that the camera be held with the lens pointing directly upwards, otherwise the mechanism fails to act.

[3] In cameras for aerial surveying the plates bear on their emulsion side against two sharp edges fixed to the camera body and rigorously defining the plane of the sharp image.

[1] Attempts have been made to supply plates in cardboard cartridges for use with a suitable loader, but it seems difficult to make a cardboard cartridge of sufficient precision for ensuring reliable working.

of lacquered metal) gives rise to dust consisting of varnish. All these particles are set in motion each time the drawer is worked, its action being something similar to that of a suction and ramming pump.

181. A changing box must have some device for showing the number of plates exposed or the number of plates still to be exposed. In the early patterns of changing boxes each sheath was stamped with a depression that was convex towards the plate and acted as a spring. On the concave surface of this depression a numbered label was pasted. This number was visible from outside through a red window. As these numbers occasionally acted on the sensitive emulsion of the plates, this arrangement has been generally abandoned in changing boxes, and has been replaced by a counter, advancing one number each time a plate is changed.[1]

When a very large number of plates have to be exposed before they can be developed, the identification of the negatives is much simplified if a number is automatically marked on each negative. In place of numbers pierced in the edges of each sheath, the same result can be obtained by marking one edge with a certain number of notches or perforations, another edge being marked to show the particular changing box or cartridge.

It often happens that after exposing all the plates in a box, neglect to read the counter may result in some of the plates being exposed a second time. Such double exposures are entirely avoided in boxes in which the last sheath is too thick to pass from the drawer. It is usually possible to secure this same advantage by riveting to the underside of a sheath a plate of aluminium about $\frac{1}{16}$ in. thick, and of exactly the same width and length as the sheath.

Some changing boxes are fitted with an automatic lock, preventing the removal of the box from the camera (or the cartridge from the loader) until the shutter has been closed.

182. Roll-film Cameras. It is to George Eastman (1889) that the invention of the roll-film holder and of the appropriate packing of the film is due. The forms originated by him differ little from those in use at the present day.

[1] Some counters register on the closing of the drawer, so that a number may be registered when the drawer is partly pulled out and then returned without changing a plate. It is better that the counter should register only when the drawer is pulled fully out.

Two spools,[1] one empty (B) and the other (B') with film wound on it (Fig. 133), are placed on either side of the camera proper, their end disc pieces being fitted to pivots, one of which can be turned from the outside, whilst both pairs act as axes of rotation. After taking off the detachable cover CC, the spools are placed in position on their pivots, noting that the two spools must be placed inversely to each other, the groove in one of the discs of the spool placed in B having to fit the pin of a winding-key operated from outside the camera. Four to six inches of the black or red paper wound on the spool are unwound and the taper end inserted in the slot of the empty spool at B. A few turns of the key are given to wind the paper

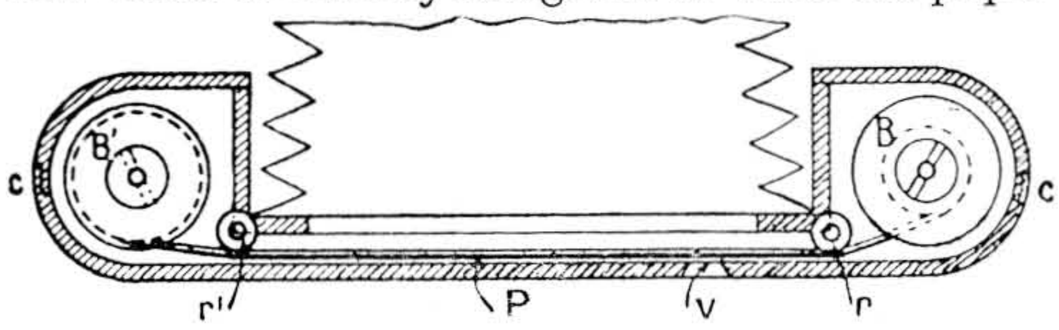

FIG. 133. ROLL-FILM CHANGING MECHANISM

tightly round spool B, and then the back CC is replaced. Some fifteen half-turns of the key are then given, the paper passing from B' to B, and moving without friction over the rollers rr'. As soon as the film, carried by the paper, reaches the field of the lens, a warning sign appears in the red window V, and is soon followed by the figure 1, showing that the film is in position for the first exposure. After making the exposure the key is turned until the figure 2 appears, and so on.[2] After taking the last photograph (the spools are usually for 6, 8, 10, or 12 exposures, according to the size of the pictures), the key is given about fifteen half-turns, and the cover is then taken off.

[1] The spools with wooden centres, on which the metal flanges were forced by pressure, are usually replaced in the current sizes by all-metal spools which are of more accurate manufacture and smaller diameter. The space between the flanges must permit the rolling up of the film and its wrapping paper, but without sufficient play to admit light. The slit in which the tongue of the paper is engaged must be exactly standardized. The spool must be sufficiently rigid to resist deformation by torsion of its axis which would result in unequal tension of the film and sometimes cause scratches on the emulsion. When travelling from one spool to the other the film slides on the wrapping paper, and for this reason it is secured only by one of its ends. In spite of this sliding a film with paper backing can never be perfectly stretched in the image plane. For this reason it has been necessary in very small sizes, i.e. such as imply considerable enlargement, to use naked film (§ 185).

[2] When a folding camera has been closed and then

The winding of the paper is then continued, pressing the fingers *very gently* on the spool to prevent the paper from uncoiling when it is no longer kept under tension by the springs which brake the supply spool. The spool is then removed and sealed with the gummed strip attached to the end of the black or red paper.

183. A very ingenious device is used for identifying the negatives as they are being taken (*autographic* film and cameras, H. J. Gaisman, 1913). Instead of a single opaque paper wrapping for the film, two papers are used, one a " carbon " paper, as employed for manifolding, and the other a thin red paper. Neither of these is completely opaque alone. The back of the camera is provided, a little

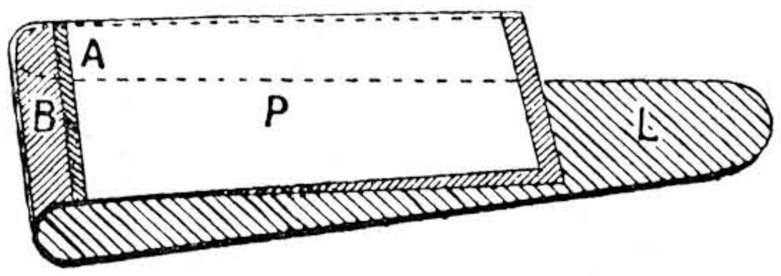

FIG. 134. FILM AND TAB OF FILM PACK

beyond the edge of the picture, with a narrow slot, which is kept covered by a spring flap. Following an exposure, the flap is raised and the desired note is made with a metal stylus, attached to the camera. An ordinary lead pencil, not too finely pointed, may be used instead of the stylus, but never a copying pencil, as the colour of the latter may come off on the sensitive surface of the next turn of film. No mark appears on the surface of the red paper, but the coating on the underlying carbon paper is removed where the stylus has pressed on it. The slight play between the two papers enables the light, diffused by the red paper, to act on the film through the inscription thus stencilled on the carbon paper, the camera being pointed to the sky (but not to the sun) for this purpose with the flap open. The flap is then closed and secured.

184. Various improvements in the construction of film cameras have been suggested, and some of them have been applied, without, however, coming into general use. To ensure the flatness of the film, which is especially necessary with lenses of large aperture,[1] film cameras are made in which the film is pressed against a sheet of glass by a plate, the pressure of which is relaxed during the time that the exposed fi m is being changed To permit focussing on a ground-glass screen a thing impossible with the usual cameras, the film-holding part of the camera has been made separate from the rest, or attached to it by a hinge, a shutter being fitted to the film-holder part to allow of detachment. To simplify the changing of the exposed section it has been suggested that the turning of the key should be replaced by a pull on a cord instantly wound back by a spring, or by a threaded rod protruding from a tube like the mechanism of an Archimedean drill, and causing the rotation of the take-up spool. Various devices have been evolved for using a camera with spools of size smaller than the normal one (junction pieces for the pivots and metal masks restricting the length of the exposed film).

Reference must lastly be made to the common use of *adapters* for *dark slides for plates*, interchangeable with the ordinary back, or attachable to the film camera after the ordinary back has been removed. Some adapters bring the sensitive surface of the plate into the plane normally occupied by the sensitive surface of the film, and thus permit of the usual focussing scales being employed. With most adapters, however, a correction of the focussing is necessary unless the camera is fitted with a second focussing scale, engraved in a different colour or clearly marked " Plates."

185. The necessity to use bare film in miniature cameras fitted with large aperture lenses in order to avoid defective flatness due to the sliding of the film on the paper (§ 182, foot-note) has led, in order to facilitate the winding of the film and the working of a counter, to the adoption of 35 mm. ciné film with two marginal rows of perforations, leaving between them a usable space of 25 mm. width.

This film is usually supplied for 36 exposures 24 × 36 mm. (the length of 36 mm. is equal to six times the pitch of the perforations) in a special charger in lengths of 150 cm., of which about 6 in. are sacrified at the free end of the strip as the leader, suitably tapered for attachment in the camera in daylight. To avoid losing a similar length at the other end the exposed film is not wound on to a second spool, its rigidity being taken advantage of to push it by means of two toothed wheels, engaging with the perforations and actuating the film counter, into a receptacle

opened with the film in position for the next view, it is advisable to stretch the film by turning the winding key slightly, as the film may have been slackened by the air eddies inside the camera.

[1] Films kept for long in a very dry atmosphere will occasionally become crinkled at the edges and then fail to give sharp pictures, unless the lens is used with a very small stop.

from which, after all the exposures have been made and before opening the camera, it is returned to the charger by rotation of a milled knob taking with it the core of the charger. To make this return possible the interior end of the film strip must not be detached from the core, as would happen if after the 36th exposure an attempt were made to overcome the resistance then felt to unwinding. If this accident should occur the film cannot be returned to the charger until the camera has been opened in a dark room.

186. Film-packs. The cut-film packing forming a changing box for the films[1] it contains still retains the name of "film pack" under which it was first issued in 1903 by the Rochester Optical Co.

Each of the 12 films *P* (Fig. 134) is attached (on one of its short sides) by an adhesive strip *A* to a long band *B* of enamelled opaque paper ending in a tab *L*. The 12 films (only two are shown in Fig. 135) are placed in a pile in a cardboard box (Fig. 135) with a fixed interior partition, which is extended as a kind of metal gutter, and with a rectangular cut-out within which the film is exposed. The tabs of the films are led round the gutter and project from the casing. They are covered with a band (of the same paper) which forms the safety cover of the pack. Between the fixed partition and the pack of films there is a plate of thin metal. It is held away from the partition by springs and presses the safety cover against the cut-out and the films against the safety cover. Strips of felt press the tabs together at the point where they emerge from the casing, and another strip of felt presses the curved portion of the paper bands against the convex surface of the gutter.

In use, the cardboard pack is placed in an adapter interchangeable with the dark slides of the camera. This having been done, the rear tab (the tab of the safety cover) is pulled[2] so as to uncover the first film. After the first film has been exposed it is transferred to the rear compartment by pulling the tab marked No. 1 until there is felt a resistance, due to the extra thickness of the film and adhesive strip. The protruding length of the band of black paper is then torn off by pulling it sideways against the metal edge of the adapter. The changed film remains attached to a sheet of black paper bearing the number 1, thus allowing of the negatives being identified. The second film is then in place ready for exposure. After it has been exposed it is changed by pulling tab No. 2, and so on. When the twelfth film has been changed the pressure plate is pressed against the cut-out and closes it. The pack can then be removed from the adapter in daylight and replaced by a fresh one.[1] After removing the exposed films from the cardboard box the latter is thrown away.

With the object of reducing the cost of films

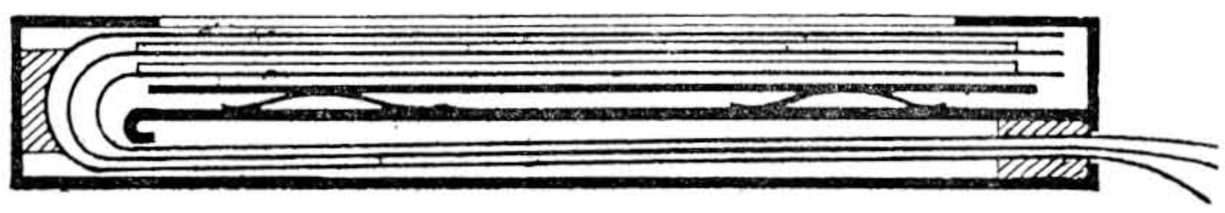

FIG. 135. CONSTRUCTION OF FILM PACK

used in this manner, metal containers of pattern identical with that of the cardboard casing described above have been manufactured. These may be reloaded in the dark with bands of paper supplied ready for placing in the case.

Various devices have been suggested for incorporation in film packs to enable a note to be made on each film at the time that the photograph is taken, but nothing practical has been evolved as yet.

187. Tripods and Pocket-supports for Hand Cameras. An exposure of $\frac{1}{10}$th second is usually the longest that can be given with the camera held in the hand without risk of movement due to the involuntary movements of the body. While some cameras can be placed level on a table or a window-sill, it is not always possible to find a steady support or a wall conveniently placed against which to hold it. If the user is not to be greatly limited in his work with a hand camera, an indispensable accessory is a tripod, or at any rate one of the many patterns of pocket accessories by which the camera may

[1] For avoidance of abrasion of the sensitive surface (§ 199) during changing, the emulsion of these films is covered with a very thin (0·004 mm.) coating of hardened gelatine.

[2] The pull must be steady and gentle; a violent, sudden pull may tear the tabs before the films have been changed.

[1] The frail construction of film packs renders them very liable to be bent by any abnormal pressure, and this may lead to difficulties in changing or to the occurrence of streaks of fog, particularly along the edges. A film pack should never be carried in the pocket except in the cardboard box in which it is sold, and care should be taken not to crush it in trunks or suit-cases in which it may be packed.

be fixed to a very large number of natural supports.[1]

A hand camera must therefore have on two of its sides a bush of the standard Continental screw-thread (§ 157), or at least the Anglo-American thread.[2] In the case of a camera fitted with a changing box which needs to be placed flat on its back (lens pointed directly upwards) when changing the plate, it would be troublesome to screw and unscrew after each exposure. For such cameras a small board is often supplied for screwing on to the tripod, the camera being simply placed on the board either upright or oblong.[3]

It is of course not possible to consider the use of the solid wooden tripods made for portable professional apparatus, for such a tripod would be heavier and more bulky than the camera itself. Nearly always telescopic metal tripods are used, in which the legs are divided into sections sliding one in another. The rigidity of an extended leg leaves more to be desired, as the diameter of the tubes is smaller and the number of sections is increased with the object of reducing the length for carrying. Weight for weight, it is preferable to use tripods with aluminium tubes of large diameter fitted with brass slide-sleeves rather than tripods with slender brass tubes. Tubes of triangular section can be quite sturdy without the total section of the tripod being too large, as the legs fit closely against each other. The length of the legs is regulated by drawing out a greater or less number of sections. As a rule, the sections lock automatically as each is fully extended (some tripods with cylindrical legs have a bayonet catch), and for closing all that usually needs to be done is to press one catch on each leg, the whole leg then collapsing on applying a fairly sharp push.

Some manufacturers supply tripods which can be taken to pieces and spare parts obtained to replace any that become worn, but metal stands which do not bear a manufacturer's mark are usually irreparable.

Tripods have been supplied, though not to a large extent, with a screw ring around the head by means of which the degree of opening of the legs can be regulated and the tripod can thus be prevented from slipping. It has also been suggested that the head should be fitted with a thick disc of felt or rubber, the elasticity of which permits the camera being rotated without having to turn the whole metal tripod.

There can also be obtained commercially ball-and-socket heads, usually of too light a construction, and panoramic heads for the same purposes as with professional cameras (§ 157).

Lastly, let formal mention be made of the walking-stick tripods, usually inconvenient either as sticks or as stands.

The pocket supports have their uses. They usually comprise a base, with screw, for the camera, and a ball-and-socket uniting the base to a kind of joiner's clamp. The latter enables the fitment to be fixed to the back of a chair, handlebar of a cycle, fence, or door frame. In some cases, the support can be fixed to a tree-trunk or mast by a steel ribbon or chain which can be drawn tight by an excentric fastening. It is necessary to avoid absolutely the supports in which there is a wood-screw for fixing into tree-trunks, a practice injurious to the tree and likely to bring the user into trouble.

188. Tests of a Hand Camera. In addition to the tests already described (§ 161) for professional cameras, especially as regards the coincidences of the planes of the focussing screen and of the sensitive surface, the examination of the lens (§ 116) and of the shutter (§ 146), which are usually integral parts of the camera, there is need, in the case of a hand camera, to make the following tests.

In cameras with tapering bellows, see that the picture is not cut off by the bellows, especially when the rising front is used to any extent.

In all cameras fitted with a focussing scale, verify, either by examination of the image on the screen, or, better, by a practical photographic test, that test-objects such as a sheet of printed matter facing the camera, placed at the various distances marked on the scale, are really rendered sharply.

In all cameras fitted with finders it is necessary to see that there is at least a reasonable degree of agreement between the picture in the finder and that in the camera. If necessary, a finder

[1] For the purpose of steadying a camera held in the hands it has been suggested that the instrument be held in a state of tension by securing a long strap to it and keeping this latter anchored under the operator's foot.

[2] Nearly all metal tripods are fitted with the English screw and with an adapter with an interior (female) thread of the English standard and the Continental thread outside. If a camera with the Continental thread is being used, it is well to solder this adapter on and so avoid losing it.

[3] In the case of certain stereoscopic cameras advantage is taken of the space between the two parts to fit there a conical tube, the camera being fixed on a conical projection on the tripod head.

which shows too much subject must be masked with bands of gummed black paper or with black varnish. Of the two evils, it is better that the finder should show less subject than the camera records, since the negative can be enlarged if the image is smaller than is desirable.

It is also well to see if it is possible to fit a colour filter to the lens if required, and if the thread of the tripod screw fits that of the bushes on the camera so as to allow of the latter being properly fixed on the tripod.

189. Care of the Camera. A camera treated properly can give long service while retaining all its original qualities, but any wrong handling, and any attempt to force it to open or close without loosening the catches or replacing in position the various parts, may result in serious damage.

Parts where there is friction (baseboard runners, grooves of dark slides and shutters therefor, etc.) must be lubricated from time to time, preferably with graphite, e.g. with a carpenter's pencil at an angle, and with which it is easy to apply a very thin film of graphite, which considerably reduces the risk of premature wear.

A photographic camera must never be left in a damp place, for the woodwork may swell, the leather covering may come unstuck, and the metal parts may rust or become covered with verdigris. If a camera has been exposed to rain and particularly to sea-water, it should be wiped with as little delay as possible. It should then be placed in a dry place, until the bellows are quite dry. A piece of waterproof cloth, used also as a focussing cloth, enables the camera to be properly protected when necessary. No less important than the avoidance of a fall or sudden knock is that of constant vibration which in time causes the loss of screws fixing the parts together. A camera case should not be attached rigidly to the handlebar of a cycle, nor put on the floor of a car. From time to time a polish composed of wax and turpentine should be rubbed on the woodwork and leather covering,[1] and metal parts should be rubbed with a rag slightly greased with vaseline.

All the interior parts should be cleaned fairly frequently with a brush and dry rag.[2]

Special precautions must be taken with dark slides and steel sheaths. They must never be left in a dark room, where it is always somewhat damp. When in process of loading and unloading they should be placed on a perfectly dry table, secured from risk of splashings of liquid. Blackened steel rusts very easily, and the rust comes off in flakes and is likely to adhere to the sensitive surfaces and cause spots, for which there is no remedy. When slides and sheaths are likely to remain unused for a long period it is well to grease them very slightly with vaseline, but they must be freed from the grease with a dry rag before using them again. These accessories are easy to damage if clumsily handled, and a dark slide or shutter that has been bent is usually not light-tight, while a bent sheath is likely to scratch the emulsion surface of the plate behind it or to cause the changing box to jam.

A camera should never be left in a cupboard except in its case. The lens should be cleaned (§ 117) from time to time, but not to an undue extent, the surfaces being liable to injury as the result of improper cleaning. Finally, it should be remembered that the shutter must never be oiled, and that it must not be taken to pieces except by an expert.

[1] Bellows of varnished leather must never be greased. They should be dusted from time to time with talc and the excess then wiped off. This prevents the folds from sticking together.

[2] For keeping free from dust, it has been suggested that the insides of cameras and changing boxes should be given an exceedingly thin coating of some greasy material, in particular cotton-seed oil.

PART 3
PRODUCTION OF NEGATIVES

CHAPTER XV

THE NEGATIVE: GENERAL REMARKS ON PHOTOGRAPHIC NEGATIVE PROCESSES

190. The Wet Collodion Process. Of the many different photographic processes which were practised before the introduction of modern gelatino-bromide plates and films, the only one which is still commonly used commercially (photo-mechanical reproductions, copying originals for enlargement, etc.) is the *wet collodion process*. In this process each sensitive plate is prepared by the user immediately before it is required (the plate not being dried until the various stages of the process are finished) by coating a sheet of glass with a layer of collodion containing a suitable mixture of bromides and iodides. As soon as the collodion is set, the plate is immersed in a solution of silver nitrate, and by interaction between the silver nitrate and the ammonium and cadmium bromides and iodides there are formed in the collodion film silver bromide and silver iodide, whilst the ammonium and cadmium nitrates remain in solution in the excess of the "silver bath." After draining, the plate is exposed in the camera and taken to the dark-room. However long the exposure given to the plate, no visible image appears, a condition of things which we describe by saying that the image is *latent*.[1] It can be rendered visible only by the process of *development*, i.e. by treatment of the plate with a solution of reducing substances (combining readily with oxygen), e.g. a solution of ferrous sulphate, with the addition of an acid to retard the process and render it more regular, which reduces to the metallic state the silver of the silver nitrate impregnated in the film. This silver is deposited in minute particles only at points on the plate which have been exposed to light, the amount of silver deposit increasing with the amount of exposure and thus giving an image. This method of development by precipitation of the silver contained in the developer is always spoken of as *physical development*, After rinsing, this image is freed from the silver salts which served as a temporary support for it by treatment with a solvent of silver iodide, e.g. a solution of sodium cyanide. This process is called *fixing*. The image, viewed by transmitted light, is opaque at the points where the silver is deposited; viewed by reflection, especially in front of a dark background, it appears white,[1] as do almost all images obtained by physical development.

For details of these processes the special manuals on the subject must be consulted.

191. The Gelatino-bromide Process. The manufacture of gelatino-bromide plates, films, and papers is exclusively an industrial process. The emulsion of which the sensitive coating is made is obtained by mixing under suitable conditions, in the presence of gelatine, solutions of silver nitrate with the iodide and bromide of potassium. In this way very minute crystalline grains of silver bromide, with a little iodide, are formed. After washing, in order to get rid of the residual soluble salts, the emulsion obtained, which is a milky suspension of these crystalline grains in the gelatine, is coated on the desired base and put on the market after sorting, cutting-up, and suitable packing.

When such an emulsion is exposed to light, no change is directly observable, except perhaps that after a fairly long time a slight darkening of the emulsion (which is yellowish-white in its normal condition) takes place. The action of the light has resulted in the formation of a *latent image*, just as was shown to be the case in § 190.

The negative image only appears when the emulsion is treated with a complex solution, the developer, of which the essential constituent, the developing agent itself, is a reducing substance chosen from amongst a fairly limited number of chemical products, most of which are closely related to the aniline dyes. This process of *chemical development* is nearly always used,

[1] From the Latin *latens*, meaning hidden.

[1] This property was formerly used for obtaining direct positives, thus imitating to some extent the Daguerreotype, the forerunner of the ferrotype portraits of travelling photographers.

the image being formed by reduction to the metallic state of the silver which, in the grains affected by light, was combined with the bromine and the iodine. The silver obtained by chemical development is usually in the form of very minute matt black particles, the agglomerations of which retain to some extent the appearance of the original crystals, but have a spongy structure comparable with that of coke. After rinsing, the excess of silver halides is removed from the image, otherwise they would reduce the contrasts and after a time would cause a change of appearance. This *fixation* is carried out in a solvent of silver bromide (the principal constituent of the emulsion), which is generally a solution of sodium thiosulphate. The negative thus obtained is then washed to remove the soluble salts, and finally dried.

Instead of dissolving out the silver bromide whilst allowing the reduced metallic silver to remain, the silver may be dissolved out and the silver bromide left. When this silver bromide is reduced a *direct positive* image is obtained, i.e. an image in which the distribution of opacities and transparencies is the inverse of those in the normal negative. In this way is obtained a direct positive, which, however, is not usually very good, unless emulsions in very thin and perfectly uniform layers are used.

Physical development of gelatino-bromide emulsions may be carried out before or after fixing, but as the coating does not contain any soluble silver salts, a solution of silver nitrate needs to be added to the developer.

Lastly, the possibility should be mentioned of carrying out development and fixing simultaneously, by mixing in suitable proportions a suitable developer and sodium thiosulphate. This procedure is, however, of no practical importance.

The processes mentioned above must obviously be carried out in the absence of all light which can act on the sensitive materials used. It will be seen later that a very weak orange-red or green light is generally employed.

Another method is to *desensitize* the emulsion, after exposure in the camera, by treatment in a very dilute solution of certain substances, coloured or non-coloured, the actual coloration, however, playing no part. A desensitized emulsion may be developed in ample yellow light, or even in weak white light.

The negative obtained by the normal processes does not always possess exactly the desired qualities. Its contrasts may not be sufficient, in which case it is necessary to *intensify* it. Its opacities may be too great and it may then be advantageous to submit it to the process of *reduction*,[1] which, according to the method adopted, may either increase or decrease the contrasts, without, however, always acting to the same degree on all the various tones.

Local defects in the negative or in the subject, or in the distribution of lights and shadows in the subject, may call for *spotting*, *retouching*, or *working-up*. Finally, it may be necessary to separate the gelatine film containing the image from its support, especially from the glass on which it was coated, with the object of reversing the image as regards right and left, this process being known as *stripping*.

[1] Here and elsewhere throughout the text the established English words *reducer* and *reduction* are used for the French *affaiblisseur* and *affaiblissement* respectively, that is to say in respect to reduction in the photographic sense. It is hardly necessary to point out that, chemically, the reduction of a silver image is an oxidizing process.—Ed.

CHAPTER XVI

PREPARATION AND PROPERTIES OF NEGATIVES—GELATINO-BROMIDE EMULSIONS

192. Preparation of Emulsions. Rapid negative emulsions are usually prepared by pouring a neutral or ammoniacal solution of silver nitrate into a slightly warm solution of gelatine[1] containing potassium bromide with a small proportion of iodide. The mixing requires to be done during constant agitation, e.g. in a mixer, thus avoiding the possibility of the least excess of silver nitrate. The conditions under which the mixing takes place have a considerable, if not the chief, influence on the final characteristics of the emulsion. Slow, fine-grained emulsions are prepared from weak solutions of metallic salts, mixed in the presence of a large proportion of gelatine; large-grained crystalline rapid emulsions are prepared from concentrated solutions of silver nitrate and potassium bromide mixed (all at a time or in several separate additions) in the presence of a small proportion of gelatine.[2]

The emulsion thus prepared is then subjected to the process of *ripening*, which consists in cooking it for a given time at an accurately controlled temperature, sometimes after the addition of ammonia or ammonium carbonate, unless the silver nitrate was introduced into the emulsion in the form of an ammoniacal solution. In an ammoniacal medium the cooking may be carried out for about 3 hours at 140° F. (60° C.); the time is much longer if the emulsion is neutral. During the ripening, the sensitivity increases considerably, and, while the grain size gradually increases, certain of the grains "grow" at the expense of the smallest ones.[3] A sufficient quantity of a concentrated solution of gelatine is then added, so that, after setting, the emulsion becomes a fairly stiff jelly.

After setting, the emulsion is pressed by an hydraulic press, in a silver cylinder, at the bottom of which is a perforated plate or a sieve of silver plates arranged on edge, so as to obtain shreds of about $\frac{1}{8}$ in. in diameter. Whilst in this form the emulsion is subjected to long *washing* in cold water until the excess of bromide and nitrates formed during the reaction, and also the ammonia, are completely removed. The washed shreds are then kept in ice until they are used.

After draining, the shreds of the emulsion are melted in a water bath and the emulsion submitted to a second ripening during which the speed increases, without growing of the grains. To the liquid emulsion different substances are then added, in particular chrome alum, which raises the melting point of the gelatine after it has been coated and dried; traces of potassium bromide (about 1 part to 100 parts of silver halide), which gives a cleaner image; certain dyes for colour sensitizing (§ 208), and, lastly, different substances (alcohol, saponin, etc.), which lower the surface tension of the emulsion, and thus facilitate coating. In this form the emulsion is coated mechanically on any given support, previously given a *substratum* which varies with the nature of the support and which is used to

[1] It has been known for a long time that gelatines from different sources (or even different lots from the same source) possess marked differences in their photographic properties. Some of them give much more rapid emulsions than others, although these differences can only be shown up by actual practical photographic tests. Following from an observation by R. F. Punnett in 1924, S. E. Sheppard has found that these differences are due to the presence in varying proportions (from 1/200,000 to 1/1,000,000) of sensitizers, amongst them being thiosinamine (allylthiourea) and mustard oil (allylisothiocyanate).

[2] Gelatino-bromide emulsions prepared without iodide have a white to pale yellow colour, whilst those containing a certain proportion of iodide are light greenish yellow. Both colours, however, change rapidly in light.

[3] Contrary to what has sometimes been thought, ultra-rapid emulsions with large grains cannot be obtained by ripening fine-grained emulsions. The effect of the ripening process is necessarily limited, and if it is pushed too far a certain number of the grains may become spontaneously developable by the developer without the action of light. In such a case the emulsion is said to possess *chemical fog*. In fact, the ripening increases the size of tne grains of very rapid emulsions only very slightly

A very interesting experiment can be made by means of a microscope having a magnification of about 250. A small piece of a fine-grained positive plate (only slightly ripened gelatino-bromide emulsion) is taken, and a part of it, which can be identified by means of guide marks in the film, is examined. The plate is then placed on a dish containing concentrated ammonia. If the selected part of the plate be examined from time to time, the formation of crystalline grains will be noticed; these will get larger and larger, and may become as much as 25 times the original dimensions. The smallest grains dissolve in the ammonia which impregnates the film, forming a saturated solution at the expense of which the largest grains grow still larger.

ensure that the emulsion adheres to the support during the various photographic manipulations.

193. In spite of the considerable progress that has been made in the application of the methods of physical chemistry to the scientific control of the different phases of the manufacturing process, the preparation of photographic emulsions is still largely an empirical art, and will probably still remain so as long as the intimate causes of sensitivity and the exact nature of the latent image are not known, and as long as the manufacture of gelatine, a material of vital importance in the making of photographic emulsions, does not itself make the considerable progress which at present it shows no sign of doing.

Silver bromide precipitated in pure aqueous solution is spontaneously developable without previous action of light,[1] but this reduction can be prevented by the presence of only a very little gelatine.[2] If silver bromide is precipitated in other colloidal media, such as collodion, the sensitivity is very low and cannot be increased by ripening. Thus the gelatine acts as a sensitizer, in addition to being the emulsifying agent. The presence of an iodide is necessary for the preparation of the best rapid emulsions; iodide facilitates the ripening process in that it retards the time of appearance of chemical fog. The sensitivity of the emulsion by no means depends on the sensitivities of the two constituent salts, but only on the conditions under which the salts are used and the emulsion made. All the grains in a single emulsion contain both silver iodide and silver bromide (with faint traces of silver chloride due to the chlorides which are always present in commercial bromides and iodides and in the waters used in their preparation and washings), but in variable proportions. The largest grains, which are the most sensitive, contain the most iodide.

The art of the emulsion maker is to precipitate the silver salts in the form of grains having the desired photographic qualities, with a certain regularity and uniformity, in commercial quantities and over long periods.

Whilst it is relatively easy to obtain the necessary metallic salts with the desired degree of purity (total absence of copper, iron, and lead salts, the causes of desensitization and fog), the scientific testing of gelatines for photographic emulsions still leaves much to be desired, and needs always to be supplemented by an actual manufacturing test on a semi-works scale. The properties of gelatine, even of the best-known brands, vary considerably from one batch to another, and especially from one season to another. These variations can only be compensated for by more or less successful blending. Gelatines always contain different amounts of substances, formed by their degradation, of which some, soluble in cold water, are eliminated by the washings, while others, which are insoluble, play an important rôle, sometimes useful and sometimes harmful, as regards the characteristics of the emulsion.

The state of acidity or alkalinity of the medium exerts, at each stage of the emulsion-making process, a considerable influence on the photographic properties of the emulsion.

194. In photographic factories most elaborate precautions are taken in order to keep the conditions under which the manufacturing processes are carried out absolutely constant, and to avoid all external causes of contamination.

A photographic factory generally forms an enclosed space, and is only connected with the outside by self-sealing doorways for the passage in and out of the staff of the factory and of the materials used. The air used for ventilation and drying is filtered free from dust and brought to a constant temperature and hygrometric state, generally by washing it in chilled brine, which frees the air from dust and its excess of humidity, and then by passing it over radiators.

The precautions taken to ensure cleanliness and asepsis are at least as thorough as in the best surgical operating theatres. All those in the factory can enter the part where the emulsions are made only when wearing special overalls and headgear.

A rigorous chemical control is kept of the various raw materials as well as of the emulsion itself during manufacture and afterwards. Lastly, before the final coating takes place, a test coating is carried out to ascertain the photographic qualities of the emulsion. All emulsion that is not satisfactory is treated for recovery of the silver. All those coated and issued under a maker's trade-mark may be regarded as emulsions of perfect quality, with their different characteristics lying between well-defined limits.

[1] Unless special precautions are taken and a developer containing a large amount of soluble bromides is used.

[2] If precipitated in pure aqueous solution, silver bromide may, after very rapid washing, be emulsified by agitation in a gelatine solution, thus giving a fine-grained emulsion. But if there be any delay before the gelatine is added the silver bromide agglomerates and cannot then be emulsified.

195. The Sensitive Emulsion. As an item of interest the approximate mean of the results of recent analyses (1924) of ultra-rapid emulsions is given below[1]—

Emulsion (dried in air)[2] per square foot. 42 to 70 gr.—

Percentage Proportions of the Constituents	
Water	10
Gelatine	55
Silver chloride	(traces)
Silver bromide	33 to 32
Silver iodide	2 to 3.

A negative emulsion generally has a very feebly alkaline reaction. Its melting tempera-

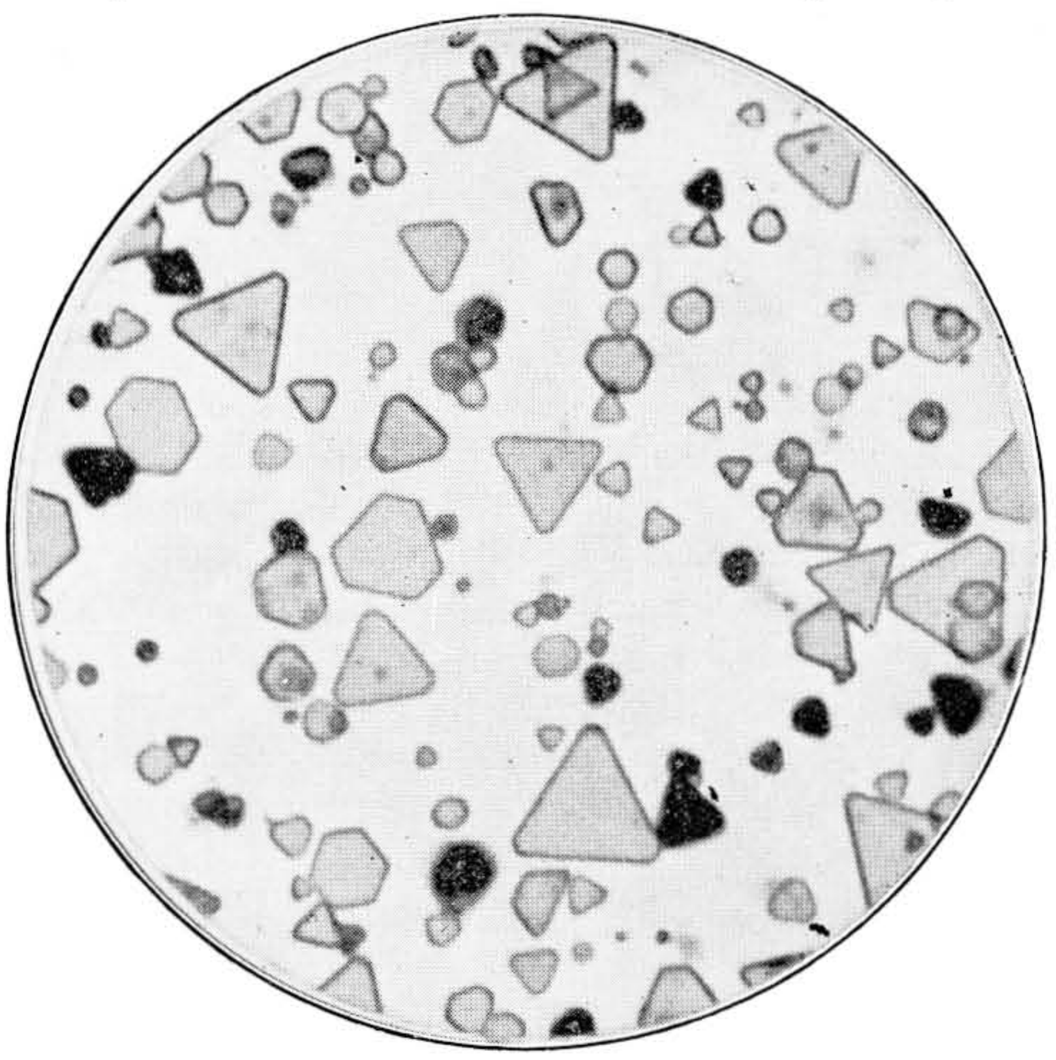

FIG. 136. PHOTO-MICROGRAPH OF SILVER HALIDE IN NEUTRAL EMULSION (DILUTED), × 4,000
(S. E. Sheppard)

ture when plunged in warm water is about 95° F. (35° C.) in the case of fairly new plates and films, and increases slightly with age.

196. Microscopic examination of suitably-diluted emulsions (Fig. 136) shows that the grains of silver halide[3] in an emulsion have very different shapes and sizes. Under a sufficiently large magnification the crystalline structure can be clearly seen, and the forms identified with those derived from the "cubic" system. The most general shapes are triangular or hexagonal tablets of thicknesses between 1/5th and 1/15th of their diameter. The large flat faces arrange themselves, during drying, parallel to the free surface of the gelatine. Microscopic examination in polarized light shows double refraction, indicating the existence of internal strains which extend to the gelatine surrounding the grains.

The mean and maximum dimensions of the grains vary considerably with the emulsion. In the so-called "grainless" emulsions (very slow emulsions, not made commercially but used in certain cases where extreme fineness of the image is necessary) the mean diameter of the grains is about 0·0002 mm. (two ten-thousandths of a millimetre), whilst in ultra-rapid emulsions (about 150,000 times more rapid than grainless emulsions) the mean diameter of the grains is from 0·003 to 0·004 mm.[1] In a single emulsion, the grains have very different sizes, even in cases where the emulsion is not made by mixing two emulsions prepared separately. As a general rule the differences in dimensions between the extreme grain sizes becomes greater as the emulsion becomes more sensitive. In a single emulsion the large grains are always more sensitive than the small ones.[2]

These grains are not usually of the pronounced

[1] The application of extremely delicate methods has shown that traces of free silver can be detected in ripened emulsions—about 2 milligrammes per square metre. F. Weigert and F. Luhr, 1928.

[2] Gelatine is considered to be "dry" when it does not contain more than about 15 per cent of moisture; in this state it is very flexible, but it becomes very brittle when the water content drops to 10 per cent.

[3] The generic name of haloid, halide, or halogenide salts is given to chlorides, bromides, and iodides.

[1] The fact that the sensitivity does not necessarily depend on the size of the grain can be shown by preparing experimental emulsions which have a grain diameter almost double that of ultra-rapid emulsions, but a sensitivity about a hundred times less.

[2] In an ultra-rapid emulsion having about 500,000,000 grains per square centimetre, with diameters lying between 0·2 and 3·9 thousandths of a millimetre, the distribution between the various sizes has been found as follows—

Less than 0·001 mm.	61%
From 0·001 to 0·002 mm.	32%
From 0·002 to 0·003 mm.	6%
Beyond 0·003 mm.	1%

The areas of the largest grains are about 200 times those of the smallest. In a slow emulsion for reproduction purposes, having about 3,000,000,000 grains per square centimetre, the ratio of the extreme areas was not more than 1 to 25.

The different properties of the grains of a single emulsion can readily be demonstrated by exposing a piece of plate or sensitive film to a very bright light; a microscopic examination of the film then shows that the different grains become coloured at very different rates.

If all the grains of an emulsion had the same sensitivity, it would be impossible to register with such an emulsion any values intermediate between black and white, since, in each region of the film affected by the light, all the grains would become developable at the same moment.

forms and sharp edges of crystals formed freely in the absence of gelatine; in fact, they are not made up simply by the silver halides, but contain also a certain quantity of gelatine and water.

The thickness of a layer of emulsion on negative plates and films in common use is generally from 0·03 to 0·04 millimetre. The grains form several superposed layers, and it is impossible to see the grains individually in the microscope, even under strong magnification. What is actually observed is due to the fact that the emulsion sometimes contains agglomerations of grains almost in contact, and that grains situated at different depths in the layer overlap one another. It is this fact which gives rise to the lack of homogeneity of photographic images (Fig. 137) seen under the largest magnifications used in practice (such as enlargements and projections). These magnifications are, however, very much less than those necessary to show the individual grains. This lack of homogeneity is called the *graininess* of the image, and generally becomes more apparent for the more sensitive emulsions having bigger grains.[1] In much of what follows grain and graininess must not be confused by the reader.

The free surface of the dried image, seen by reflection, appears the brighter as the grains of silver there are finer and rarer. The whites of a slow emulsion, clearer than those of an image with a rapid emulsion, are always brighter. Superficial reduction, dissolving the grains nearest the free surface, leaves a uniformly bright surface.

197. The Latent Image. A very sensitive emulsion, fully ripened, drops enormously in sensitivity, and may even revert to the sensitivity it had before ripening, when it is subjected to the action of oxidizing agents, which, on the contrary, have no action on non-ripened or only slightly-ripened emulsions. Thus it would seem that the great sensitivity of ripened emulsions is due to some other substance than silver bromide. This substance, in the form of nuclei distributed amongst the grains according to the laws of chance, is not sensitive itself but accelerates the formation of the image.[1]

On exposure to light these nuclei take part in some change which occurs, giving rise to latent image centres, the points from which start the reduction of the silver bromide on development. These points have been shown experimentally by T. Svedberg (1922). The photo-micrograph

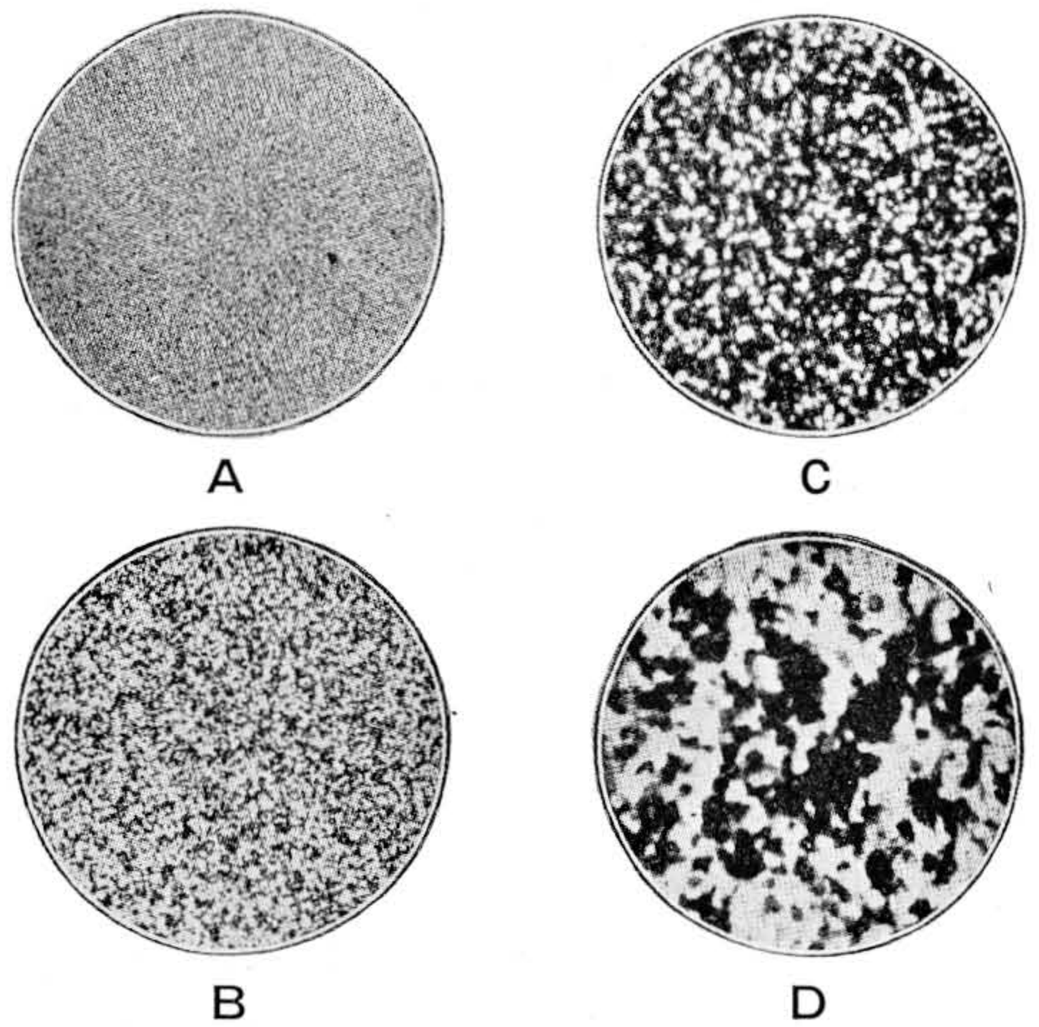

FIG. 137. APPEARANCE OF EMULSION AFTER DEVELOPMENT WHEN MAGNIFIED
(C. E. K. Mees)
A = 20 diameters. *C* = 400 diameters.
B = 100 *D* = 900 ,,

in Fig. 138 shows in the first picture the grains in a diluted emulsion after exposure before development, in the second picture the centres after very short development followed by fixation, and in the third picture (by superposition of the first two), the position of the centres in the grains.

It has been directly shown that if silver bromide is exposed long enough to an intense light it is partially decomposed into metallic

[1] Graininess is always more apparent in the clear half-tones (density 0·3 corresponding to a transparency of 0·5 or opacity 2·0), and is therefore often seen in the face in a studio portrait negative. Once present it cannot be reduced except by decreasing the contrast or the sharpness, or both.

It has been suggested (Threadgold, 1932) that graininess should be stated by the relation $10D''/D^*$, in which D'' and D^* represent respectively the densities measured in parallel and diffused light (§ 752, foot-note), for $D^* = 0{\cdot}5$. The value of this relation is usually between 11–13 (transparency plates) and 20–23 (ultra rapid emulsions).

[1] The sensitive nuclei of photographic emulsions may to a certain extent be compared with the minute traces of impurity which give rise to the phosphorescence of certain metallic salts, such as zinc sulphide.

These nuclei consist of reduced silver and silver sulphide formed from the sulphur sensitizers of the gelatine (§ 192, footnote). The rôle of these nuclei during the exposure to light would be to orient and "concentrate" the silver atoms which are freed by the action of the light on the silver halide (S. E. Sheppard, A. P. H. Trivelli, and R. P. Loveland, 1925.)

silver and free bromine, but under the conditions normally prevailing in the formation of the photographic image it is impossible to prove directly that this takes place. This is because the total mass of substance decomposed is considerably less than the least which can be detected either by the most delicate methods of

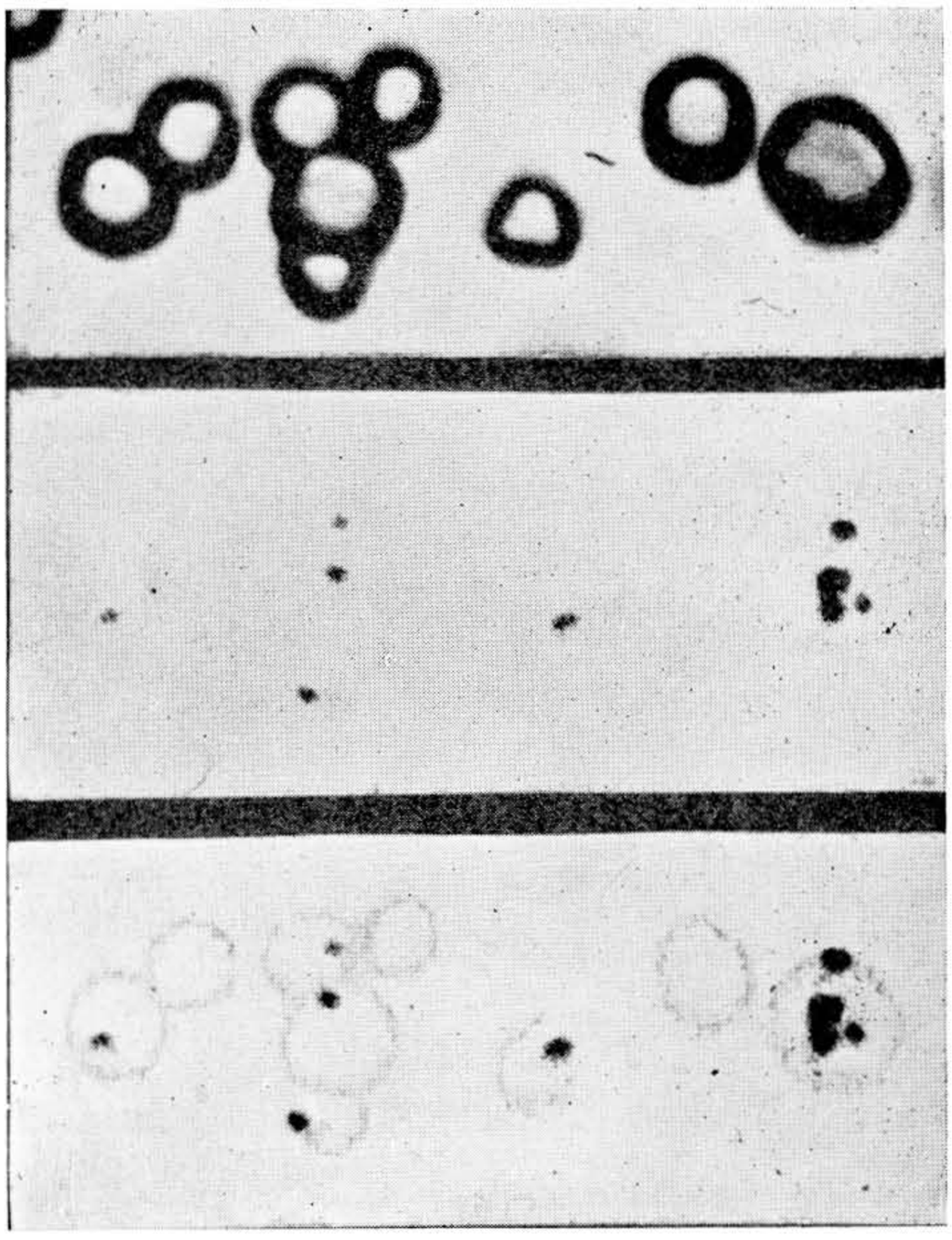

FIG. 138. DEVELOPMENT CENTRES × 4,000
(T. Svedberg)

chemical analysis, or by microscopic examination under the highest practicable magnification. Thus we can only make assumptions as to the nature of the latent image.

However, the analytical methods based on a study of the structure diagrams given by X-rays indicate the presence of very small amounts of metal silver, of which the concentration increases gradually as the excitation becomes greater.[1]

[1] The silver bromide of a sensitive emulsion, assumed to be spread in a homogeneous and uniform layer, would be about 0·0025 mm. (1/10,000 in.) thick. After exposure to light so as to obtain on development a medium density, 1/10,000,000th part of this silver bromide would be reduced to the metal state, which quantity is evidently much too minute to be visible. By reducing the same fraction of silver by action of X-rays on a silver bromide crystal 2 cm. thick (i.e. a thickness 80,000 times greater) the colour due to the liberated silver is readily visible (R. W. Pohl, 1933).

From our experimental knowledge of the latent image a certain number of facts are known of which the principal ones may be mentioned here. The latent image formed in a gelatino-silver bromide emulsion still exists after the silver bromide has been changed into silver iodide,[1] or after the silver bromide has been removed from the emulsion in the form of soluble salts (development after fixation, § 396). If increasing quantities of light act on different regions of a single sensitive film, there are obtained, after development under the same conditions, images which at first get more and more opaque up to a certain maximum and then begin to decrease in opacity (*reversal*). Thereafter the latent image is no longer developable by ordinary means even for a considerable quantity of light incident on the emulsion[2] (*solarization*). A latent image having characteristics apparently identical with those in the case of light can be obtained, at least with ripened emulsions, by the action of different reducing agents which have scarcely any action on an emulsion from which the nuclei have previously been removed in an oxidizing bath. If a sensitive emulsion is treated, after having been exposed to the light, with a solution of chromic acid, the latent image is more or less destroyed. This destruction, apparently complete with fine-grain emulsions, is incomplete in the case of those with large grains, the chromic acid thus being able to act only on the surface nuclei of the latent image, and not on those inside the grain. The latter become susceptible to development in cases where this is carried out after fixation.[3]

The latent image may be weakened or destroyed by exposure to red, and especially infra-red, light (Herschel effect, 1839), if the emulsion contains a soluble bromide.[4] This phenomenon is often better observed by long exposure and weak illumination than by short exposure to a light which is very intense. Also,

[1] In the same way a silver chloride latent image exists after the salt has been changed into silver bromide or silver iodide.

[2] It has sometimes been stated that under these conditions the sensitive salt returns to its original state, but this is not correct. The reversal does not show up, or only very slightly, in the case of physical development after fixation.

[3] By treatment with less strong oxidizers, and especially with a pure solution of potassium bichromate (J. Sterry, 1904), the contrasts of the developed image may be diminished (§ 555), due to weakening of the latent image.

[4] Various experiments have led this effect to be regarded as a return to the halide state of the silver liberated at the first exposure to light.

it is facilitated by the presence in the emulsion of organic desensitizers (safranine), or some mineral salts (traces of copper salts). By such means a positive may be obtained by exposing to red light, through another positive, a plate which has been uniformly fogged (Lüppo-Cramer, 1927.)

198. The change which takes place in silver bromide during a short exposure to light is so minute, that it was formerly thought to be a modification of the physical state or an allotropic transformation. These hypotheses, as well as those which assume an oxidation of the silver bromide, are ruled out by the fact that the same phenomena can be produced by means of very weak solutions of feebly-reducing substances, e.g. sodium arsenite.

For a long time it was believed that the violet-coloured or reddish-coloured products obtained by light-action on silver bromide and silver chloride were definite substances in which the silver was combined with half the quantity of chlorine or bromine with which it is combined in the normal silver chloride and silver bromide. It has been shown beyond dispute that these silver *sub-halides* have no separate existence, and are only " solid solutions " of colloidal silver[1] in the normal silver chloride and silver bromide. Thus the hypothesis which considers the latent image as formed of very small particles of silver sub-bromide can no longer hold.

The latent image is probably silver adsorbed to the silver bromide, as Carey-Lea suggested in 1887 and as supported by experiments of Lüppo-Cramer since 1906. This adsorbed silver possesses, however, certain properties which are different from those of completely free silver.[2]

[1] By colloidal state is meant a state of extreme division of matter of which the particles have dimensions much less than the limit of resolution of the most powerful microscopes. Because of the considerable surface that matter possesses when in this state, the phenomenon of surface *adsorption* (inter-penetration of two bodies), the effects on which are negligible in ordinary conditions, here plays a most important rôle. For example, if a cube of 1 centimetre side, of which the free surface is 6 sq. cms., is divided into elementary cubes of 0·01 thousandths of a millimetre, the free surface of the same original quantity of matter is then equal to 6,000 square metres. The medicinal " collargol " is, for example, a colloidal solution of metallic silver in water.

[2] This hypothesis is in perfect agreement with our knowledge of photo-electric phenomena, which are very similar in many ways to the phenomena occurring in photography. Thus, for example, in both cases the action of the light results in the liberation of " electrons " and the ionization of the sensitive material (J. Joly, 1905). It may be noted that these intra-atomic phenomena still occur even at the lowest known temperatures where all real chemical reactions cease, and that the formation of the latent image is possible even at the temperature of liquid air (J. Dewar, 1894). It is possible that the sensitive centres themselves may be made up partly of silver sulphide (§ 192, note) and partly of reduced silver but as particles which are too small to play the rôle of centres of attraction during development. The difference between the number of atoms of silver which make up the sensitive nuclei and the minimum number of silver atoms necessary to make the grain developable may be taken as some sort of measure of the inertia (inverse of the sensitivity) of the corresponding grains (Sheppard, Trivelli, and Loveland, 1925).

199. Different Actions on the Photographic Emulsion. The photographic emulsion is sensitive not only to ordinary visible light but to all radiations of shorter wavelengths, especially the ultra-violet[1], X-rays and similar radiations emitted by various radio-active bodies, and even in certain conditions by supersonic waves. Images can also be obtained by static electric discharge in contact with the film.

Different mechanical actions, such as sliding pressure[2] (friction of a blunt point), rubbing, etc., all cause the emulsion to become developable (*abrasion* of the film), and at the same time make the emulsion insensitive to the subsequent action of light (O. Bloch, 1915). Just like light, these different actions, if they are extremely intense, give rise to phenomena similar to reversal and solarization (§ 197). These reversals can generally be obtained much more easily if two different actions, or two different degrees of the same action, are made to act successively on the emulsion. Thus it is that an abrasion can give rise to black marks in the whites of an image and white marks in the black.

Contact with the emulsion of a great number of reducing solutions (sodium arsenite, stannous chloride, etc.), or of gaseous reducers (sulphuretted hydrogen, hydrogen phosphide) causes an intense fog.

Special mention must be made of the action of hydrogen peroxide,[3] first noticed by W. J.

[1] Due to the fact that gelatine, even in very thin layers, is very opaque to the extreme ultra-violet, these radiations can only be registered on specially prepared plates, on which the amount of gelatine is extremely small (V. Schumann, 1893), or on emulsions covered or superficially impregnated with a fluorescent body which transforms the incident ultra-violet into visible radiations capable of penetrating the gelatine.

[2] Pressure applied without friction to a sensitive emulsion *during* exposure usually produces a desensitization of the emulsion, the normal rapidity reappearing as soon as the pressure is discontinued (E. Poindexter, 1931; Ny Tsi-Zé, 1932).

[3] Although hydrogen peroxide may be in general a powerful oxidizing agent, it is known that it can cause the reduction of different bodies (ozone, permanganates, silver oxide) whilst being itself reduced.

Russell in 1899, and more recently studied by Lüppo-Cramer, W. Clark, and others.

The contact of a sensitive film, in which reduction nuclei have been formed by sufficient ripening, with neutral or acid solutions of hydrogen peroxide,[1] or with the vapours evolved by these solutions, gives rise to a series of phenomena which are all analogous to those arising from the action of light (such as formation of a developable image, reversal, and solarization). Ozonized air has almost the same characteristics.

A very large number of organic substances, and some metals, oxidize slowly in moist air and give rise to traces of hydrogen peroxide (or ozone), which can act from a distance on sensitive emulsions and cause the formation of fog. Such is the case, for example, with different woods (especially resinous woods), turpentine, and other vegetable essences, numerous resins, base resin varnishes, lignites, and, amongst metals, zinc, and, to a less degree, aluminium and magnesium.

The reader will notice that several of the substances that have just been mentioned enter normally into the construction of cameras and plate holders. This explains the fog which is often found on a plate which has been left a long time in its holder, especially in one of recent construction. These phenomena cease as soon as the surface oxidation is completed.[1]

A specially interesting case is that of the action of paper on the emulsion. Niépce de St. Victor (1857) attributed the action on a photographic plate of a piece of paper which had previously been exposed to the sun to an invisible ray, comparable with a phosphorescence. It is now known that this action is due to the formation of hydrogen peroxide by the oxidation of the size in moist air, and that it can be avoided by all bodies which destroy the hydrogen peroxide. Similar complex phenomena may be noticed when a paper, having printed or written letters on it, is placed in contact with the film; according to the nature of the ink, the latter may exert a more intense action than the paper, or, on the contrary, the metallic salts in the ink may desensitize the emulsion, so that, after a sufficiently long time

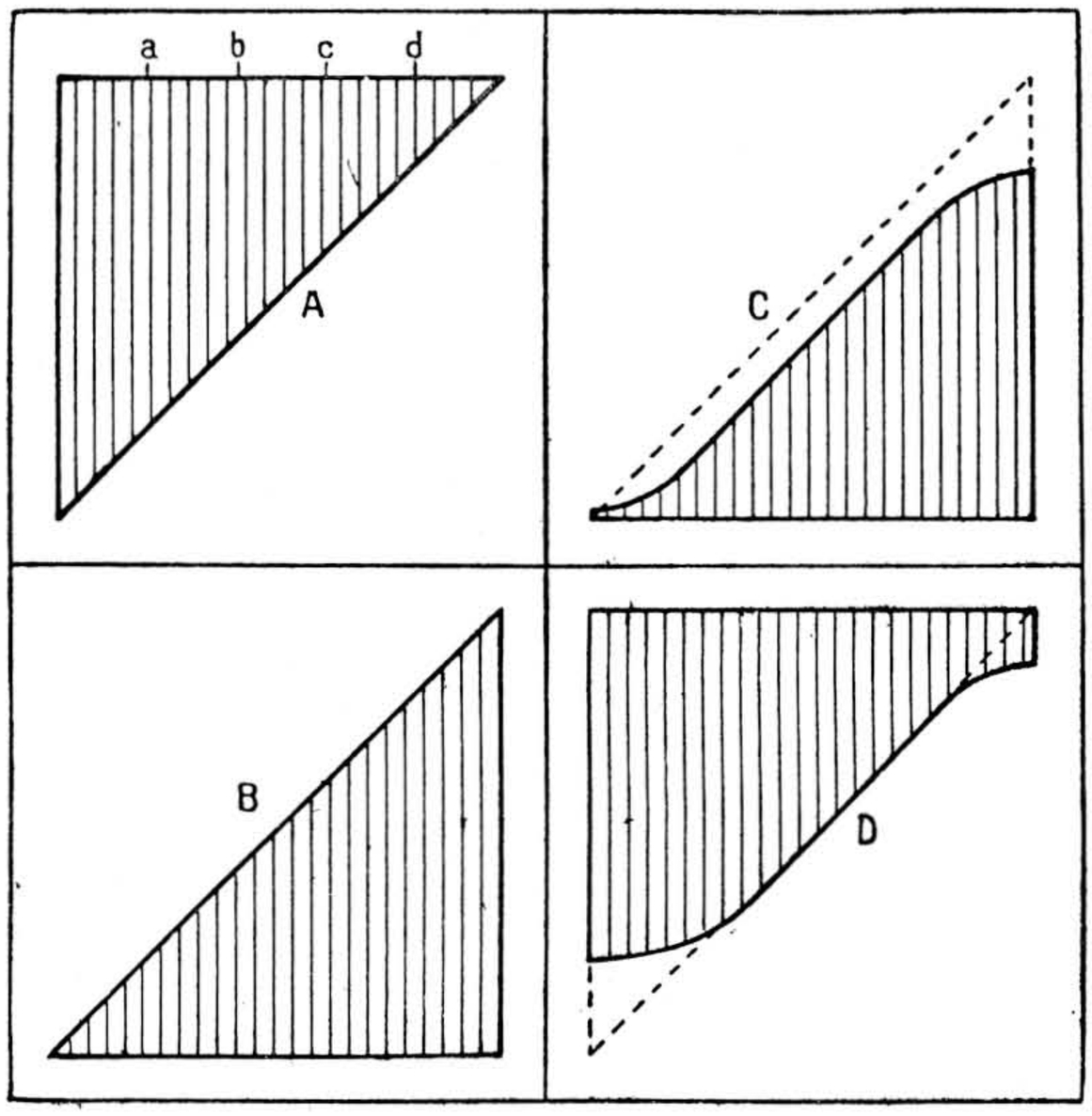

FIG. 139. THE LAW OF TONE REPRODUCTION

[1] In alkaline solution the hydrogen peroxide becomes a developer of the latent image, and does not give rise to fog.

[1] Other metals, which are non-oxidizable, act at a slight distance on sensitive emulsions after a very long stay in darkness. This action has been attributed to a secondary radiation produced in the metal by cosmic radiation (J. Reboul, 1936).

in contact, the image of the text may appear, on development, deep grey on a clearer ground, or light grey on a dark ground.[1]

200. Various Actions on the Latent Image. If in identical conditions various parts of one and the same plate or film are exposed at known intervals of time running into hours, the negative developed immediately after the last exposure will show different densities in the different parts. As a rule, the oldest latent image produces a somewhat denser image, this spontaneous evolution of the latent image being at first rapid and then slower and slower.[2] Moreover, it is not the same for latent images produced by different radiations.

In the case of keeping for a very long period between exposure and development, especially in a warm and moist climate, other phenomena become manifest: progressive fog and, usually, retrogression of the latent image, this retrogression being sometimes fairly rapid with films owing to the chemical action of the products of spontaneous decomposition of the support.

201. The Law of Density. In order to set forth the accuracy in the rendering of different luminosities in the photographic process, we will consider, not a landscape or any other usual subject, where the luminosities are distributed at hazard, but a scale in which the same range of luminosities is arranged in increasing order, and preferably a translucent scale which can be printed by contact on the sensitive film to be tested in such a way as not to introduce any causes of error due to the lens. Let us choose, for example, a neutral grey prismatic screen (wedge), forming a graduated scale of tones such as that represented in section (but with the height very exaggerated) by Fig. 139A.

If we consider several points *abcd* equidistant from one another along the straight edge of the prism, we see that the thicknesses of absorbing matter at these points form an *arithmetical progression*;[3] the quantities of light transmitted at these different points form a *geometrical progression*[1].

Take the case of several identical absorbing layers arranged so as to form a scale of graded tints. Suppose that each layer transmits half of the light which reaches it. The quantities of light transmitted by the successive steps will be as shown in the table, if we represent by unity the value of the originally incident light.

This fact is generally expressed by saying that the quantity of absorbing material (the thickness of the wedge in the example we are considering; the mass of reduced silver per unit area, in the case of a photographic negative) is proportional to the *logarithm* of the opacity. The name *optical density* is given to the logarithm (to the base 10) of the opacity.[2]

Quantity of light transmitted by	Corresponding opacity
One layer . . . $1 \times \frac{1}{2} = \frac{1}{2}$	2
Two layers . . . $\frac{1}{2} \times \frac{1}{2} = \frac{1}{4}$	4
Three layers . . $\frac{1}{4} \times \frac{1}{2} = \frac{1}{8}$	8
Four layers . . . $\frac{1}{8} \times \frac{1}{2} = \frac{1}{16}$	16

202. If we could obtain a negative in which the silver was distributed as shown, on a convenient scale, in Fig. 139B, then the "wedge" and the negative, if superposed, would make a series of uniform densities, this negative allowing us to obtain, by a second print made under the same conditions, a perfect *facsimile* of the "wedge."

Actually, however, it is known that whatever kind of sensitive film be used for one or other of the prints, the ideal result is never attained. Under the most favourable conditions the distribution of reduced silver in the negative may be like that shown in Fig. 139C. Another copy made under identical conditions will not give a

[1] These peculiarities may be observed even if paper has been badly charred, a fact which has been employed, for example, in deciphering documents rescued from a fire (R. Davis, 1923).

[2] In works on photographic photometry a comparison of the effect of successive exposures is legitimate only if development is deferred for several hours after the last exposure, so as to permit the latent images of different ages to attain equilibrium (C. Jausseran, 1934).

[3] A series of numbers form an arithmetical progression when the differences between consecutive numbers are equal. For example, the numbers 1, 4, 7, 10, 13, 16 . . . form an arithmetical progression with common difference 3.

[1] Numbers form a geometrical progression when the ratios between consecutive numbers are the same. For example, the numbers 1, 2, 4, 8, 16, 32 . . . form a geometrical progression with a common ratio 2.

[2] We will refrain here from defining the idea of a logarithm and will confine ourselves to indicating the connection between certain numbers and their logarithms or, what is the same thing, between certain opacities and the corresponding densities.

Opacities . .	1	2	4	8	10	16	20	32	80	100	1000
Densities . .	0	0·3	0 6	0·9	1·0	1·2	1·3	1·5	1·9	2·0	3·0

An optical density of 1, measured in completely diffused light, corresponds, on a photographic negative, to a mass of silver of about 0·01 grm. per sq. decimetre (a mass which is variable with the grain size, the exposure, the conditions of development, etc., and the wavelength of the radiations used). This mass is sometimes called the *photometric equivalent* of area considered.

facsimile of the original screen but the irregular scale of tones indicated in Fig. 139D.

The curve in Fig. 139C is called the *characteristic curve* of the emulsion.[1]

203. Numerical Expression of the Sensitivity of Photographic Emulsion. After attempts had been made to reduce the photographer's testing work by dividing the various emulsions into a number of arbitrary classes (one of the most fantastic of these empirical systems was that due to Warnerke), endeavours were made to denote each emulsion by a numerical value expressing some characteristic of this emulsion. The different Austro-German sensitometric systems (Scheiner, Eder, etc.) are based on the measurement of the least quantity of light (corresponding with the threshold of sensitivity), which, after development under constant conditions (which unfortunately is not always equivalent to development carried to the same degree), produces on the emulsion an image which can just be detected in comparison with the region which has been completely protected from the light. The systems of English origin, which are all derived from the sensitometric method of Hurter and Driffield,[1] attempt to define the sensitivity of the emulsion by the position of the point A (Fig. 140), at least when this point is situated on the log E axis. These different methods of numerical expression, characterizing as they do different properties of the emulsion, have no common connection between them, and it is impossible to obtain precise equivalents of one system in another. The most that can be done is to indicate the approximate relation between the different methods of expression.

[1] To obtain the characteristic curve of an emulsion, a plate is exposed in a sensitometer (e.g. under a neutral grey prismatic screen, called a Goldberg wedge) in such a way that the exposure (quantity of light, or product of the intensity and the time of exposure) received at each point of the plate is known. After development, etc., and drying, the opacity is measured at each point of the negative, and a curve is constructed showing the density plotted, not against the quantity of light, but the logarithm of this quantity (Hurter and Driffield, 1890).

The slope of the straight middle part of the curve measures the degree of contrast of the image relative to the object. This slope which increases as development is continued, until it reaches a maximum—which depends chiefly on the characteristics of the plate—is always represented by the Greek letter γ (*gamma*) and is known as gamma or the *development factor*. The value of gamma, for equal times of development, is not the same for exposures to radiations of different wavelengths. It is generally a maximum in the spectral region corresponding with maximum sensitivity; it is always less in the ultra-violet.

If several strips of the same plate have been exposed under identical conditions and developed for increasing times in the same bath, the corresponding characteristic curves will be as shown in Fig. 140. It will be noticed that the straight parts of all these curves may be prolonged to meet in the point A. The position of this point A may be on or under the log E axis, and is characteristic of the group of negatives obtained with the emulsion under test, after development in the given developer.

In studying development and the different corrective operations, we shall see the value of these considerations, the detailed study of which is called *sensitometry*.

It must be pointed out that equal exposures (product of the intensity and the effective time of exposure) have not always the same effect even on the same emulsion. An intermittent illumination always has a little less effect than a continuous illumination of the same total value, but the differences, however, are very small. On the other hand, for equal quantities of light-energy received by a photographic emulsion, the effect of a feeble illumination is generally less than that produced if the illumination is intense. For example, if the intensity of a light be reduced to 1/100th, then to 1/1,000th of its original value, then, to obtain the same density, the exposure times must be increased not 100 or 1,000 times, but 225 and about 3,300 times. The law formulated by K. Schwarzschild in 1899 has since been shown to hold strictly only in the case of extremely weak illuminations, to which the experiments of this author had been limited. For each emulsion there appears to exist a minimum very weak illumination (which is weaker the more sensitive the emulsion) below which it is impossible to render the grains developable.

These peculiarities are sometimes indicated by stating that photographic emulsions do not obey the *law of reciprocity*.

The photometric properties of an emulsion cannot therefore be completely represented except by its *characteristic surface* (G. E. Harrison and C. E. Hesthal, 1923; H. Arens and J. Eggert, 1928), the three co-ordinate axes corresponding respectively to illuminations, durations of exposure and densities. Such a surface is sufficiently defined by the projection of its contours, each corresponding to a value of the density, on the plan of the two other axes of co-ordinates.

[1] The method devised by Hurter and Driffield in 1890 for studying the properties of a photographic emulsion has been extremely fruitful and still furnishes the most complete information on the different properties of sensitive emulsions and represents them graphically under the most favourable conditions. At the same time the mode of numerical expression of sensitivity proposed by them (H and D sensitivity) has now (1929) scarcely any significance. At the time of Hurter and Driffield, already long past, the different types of emulsions all had characteristic curves of the same general form, and in order to express the relative sensitivity of two plates it was sufficient to measure (parallel to the exposure axis) the distance between the corresponding curves, after the two plates had been developed to the same *gamma*. Since 1910, however, new types of emulsions have appeared with characteristics very different from those old emulsions, and it is impossible to imagine a single numerical value which defines at the same time the form of a curve and its position relative to another one.

The numerical expression of plate sensitivity has become in many cases a means of commercial advertisement, numbers being given to emulsions without previous consultation with a firm's technicians, so that only very rough values can be attached to indications which are given.[1]

An agreement between German makers of sensitive emulsions defined, in 1932, under the name of DIN 4512 (Deutsche Industrie Normen), a method of indicating the speed of the usual negative emulsions, especially films for amateurs. A sample is exposed for 1/20 second behind a neutral grey scale of which the densities progress by 0·1. This scale receives an illumination of 40 lux (artificial sunlight). After very prolonged development (so as to obtain the number most favourable to the emulsion) in a specified developer, the speed of the emulsion is stated by the density of the sensitometric screen under which there has been obtained a density superior by 0·1 to the fog density, without this latter exceeding 0·4. For instance, if the desired density was obtained (average of four tests) under patch No. 18 of the screen (density 1·8), the speed is stated as 18°/10 DIN (with a tolerance of 3°/10, corresponding to a variation from single to double). There is, unfortunately, no relation between the speeds of different emulsions, developed in conditions such as to give a usable negative, and the speeds assigned to them after the excessive development (which exaggerates contrast and graininess) prescribed for the application of the DIN method.

The makers of different exposure-meters (§§324-326), Watkins, Wynne, etc., publish from time to time, for use with these instruments, tables showing for the best-known types of emulsions coefficients of sensitivity which represent generally quite satisfactorily the average properties of each type.

It may be mentioned that emulsions manufactured successively under the same name by the same maker may have markedly different characteristics, the differences being sometimes as great as those between emulsions of different makes.

Except for the photography of subjects in very rapid motion or animated subjects in bad light, a quality of the emulsion far more important than its speed[1] is its latitude of exposure, the relation between extremes of exposure for the correct reproduction of a subject of medium contrast. The double coating of a support with

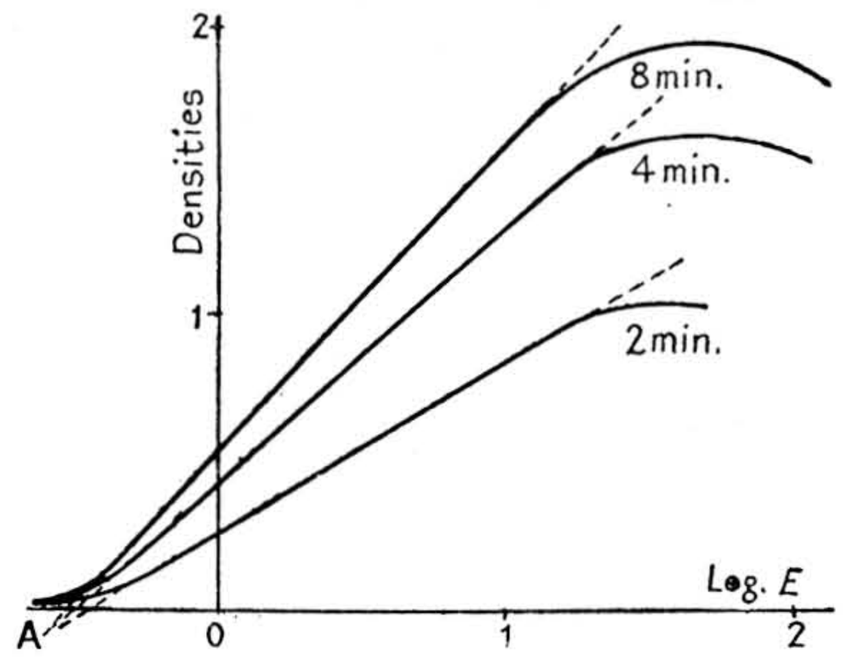

FIG. 140. CHARACTERISTIC CURVES OF A PLATE

a very rapid emulsion upon a slow one so that the latter comes into action when the upper one reaches solarization often permits, in the case of a subject of which the extreme luminosities are in the relation of about 1 : 30, variations in exposure greatly exceeding a range of 100 to 1. The characteristic curve of these double-coated emulsions is usually broken.

204. Reversal and Solarization. When a series of increasing exposures, extending over a very wide range, are given to an emulsion, it is found after development that the resulting density first increases, reaches a maximum, and then

[1] It is very desirable that the qualities attributed to different types of emulsions should correspond a little more closely with their real properties. Gelatino-bromide plates, which were called "extra-rapid" in 1880 (in comparison with collodion plates, the only ones employed up to that time), and which are now considered as slow, have unfortunately always kept their ancient name, and all the available superlatives have been exhausted before the speed of emulsions has ceased to increase.

[1] An appreciable increase (2 to 3 times) of the original sensitivity of an emulsion may sometimes be obtained by giving a uniform exposure before or after the real exposure, but in any case before development, provided that this exposure is not greater than that corresponding to the threshold of sensitivity. This is called *sensitization by preliminary exposure*. The difficulty in applying it is in the necessity of giving only an extremely small intensity in order to be able to regulate the time conveniently. It has been suggested, for example, to give this preliminary exposure inside the camera by a candle or some other very weak source, the lens being covered by an opal or ground glass and pointed towards the light at about two yards from it. The best time is determined by trial.

Keeping plates or films for 24 to 30 hours in a closed box containing some drops of mercury increases the speed by about 1·5 to 2·5 without affecting the contrast or the fog; this effect continues for about a fortnight. On exposed plates or films, the effect of mercury vapour is the intensification of the latent image (F. Dersch & H. Dürr, 1937).

diminishes until it becomes almost nothing. In 1880 Janssen suggested the existence of a second range of increasing densities beyond the point where the blackening had decreased to nothing. Thus, in photographing a natural object, it is possible, according to the time of exposure given, to obtain either a normal negative, or an almost uniform high density (first neutral zone), or a more or less satisfactory positive (image reversed by solarization), or, lastly, an almost uniform and very weak density (second neutral zone). Generally speaking, the time of exposure necessary to obtain a direct positive on an ordinary emulsion is 1,000 times that necessary to give a satisfactory negative,[1] but this process is uncertain and is used only with special emulsions (§ 439).

The reversal of images on gelatino-bromide emulsions may be avoided, or at least reduced, by impregnating the emulsion with different substances (sodium nitrite, salts of hydrazine, or paraphenylene-diamine, etc.), which absorb the bromine liberated from the silver bromide by the prolonged action of the light; it is made easier by partial iodization of the emulsion (A. Charriou and S. Valette, 1935).

Further, the effects of solarization may be destroyed by treating the emulsion, before chemical development, with solutions of chromic acid, or by physical development after fixation.

Abnormal reversals occur in certain special cases. A *very short* exposure (of the order of 1/50,000th of a second) to a very intense light lowers the sensitivity of the plate and prevents it from fogging when again exposed to the light[2] (Clayden effect).

Reversal of the image is also sometimes noticed in developing a normally-exposed plate by means of a light which is not quite safe; the light prints a positive of the normally developing negative on the lower layers of the emulsion, and this positive image may become preponderant. A similar phenomenon is observed when white light is momentarily admitted to the room while the image is still weak (Sabatier effect), due to the desensitization of the emulsion by the oxidation products of the developer (§ 330). This reversal occurs also if the developer is an alkaline solution of hydrogen peroxide (G. W. W. Stevens and R. G. Norrish, 1934). The result is the same whichever face of the sensitive layer is exposed to light for the second exposure (A. P. H. Trivelli, 1908).[1]

205. The Accuracy of Photographic Images. Each brightly illuminated point of a sensitive film acts towards the surrounding grains as a secondary source of light and thus produces a developable image at points beyond the part directly illuminated until a point is reached where, due to absorption, the quantity of light transmitted is less than the threshold value. By the application of the laws of absorption, Féry (1899) showed, and experiments have verified, that the enlargement of the image follows an arithmetical progression when the quantities of light increase in geometrical progression. This phenomenon is known as *irradiation*. However, a plate must be over-exposed at least ten times to enlarge to double its width a line 1/125th of a millimetre (this being really a spreading of 1/250th of a millimetre on each side of the line). This increase of thickness has really important consequences only in scientific work of high accuracy and can be avoided by lightly staining the emulsion yellow or red and compensating for the absorption of the light by the dye by increasing the time of exposure.

Much more marked spreading of the image is caused by such defects as traces of aberration, always present even in the best lenses, and from slight faults in focussing.

[1] The character of a reversed image changes considerably during very prolonged development, the image, which sometimes first appears as a negative, becoming positive and then changing back to negative. Attempts have been made to explain the retrogression of solarization through prolonged development by adducing the fact that the deep-lying layers would be less solarized than the superficial ones, but this phenomenon occurs also in dilute emulsions spread in thin coating; it is therefore probable that solarization is confined to the exterior of each of the sensitive grains, the active centres existing in the interior of the grain not being able to act except after prolonged action by the developer. In fact, solarization does not appear in a developer containing a solvent of silver halide nor in the case of physical development after fixation (H. Arens, 1934).

[2] This is the effect which explains the formation of reversed images, called *black flashes*, in the photography of flashes or electric sparks.

[1] A method of *stylization of images by partial reversal* has been applied by Man Ray (1934) under the incorrect name of "solarization" as it is due to a combination of the Sabatier and Eberhard effects (§ 343). A negative (preferably one duplicate on contrasty glossy paper, because of the uncertainty of the result) is normally exposed and developed, development being stopped before the edges begin to fog. It is blotted off (without rinsing) and exposed to white light and development is allowed to continue by means of the developer impregnating the emulsion, after which the image is fixed. A copy of the negative thus obtained furnished a print of very much softened contrasts of which the main lines are surrounded by a very distinct black line.

The *limit of resolution* of a photographic image is the smallest distance between the images of two points, or two parallel lines, which can be seen separately under a magnification such that the individual grains of the image are not more apparent than the image itself.[1] The limit of resolution diminishes in the case of very short or very long exposures; it varies quite appreciably (within a ratio of 1·5 to 1) according to the developer:[2] and, to a lesser degree, with the contrast of the model; it varies with the nature of the emulsion but without any direct relation with the grain size. An image localized in the surface of the emulsion gives greater resolution than one formed throughout the whole thickness of the emulsion coating. Thus all factors which tend to limit the utilizable thickness of emulsion film lower the limit of resolution. Notable examples of this are coating the emulsion in a thin layer, the use of radiations which are strongly absorbed by the film (the extreme violet or ultra-violet), dyeing the emulsion with some colouring matter which strongly absorbs the active radiations (yellow in the case of ordinary emulsions), and, finally, physical development or partial chemical development.

The table given below indicates the number of lines per millimetre which can generally be separated by different types of photographic materials—

Type of material	Albumen plates	Positive plates	Positive cine film	Rapid plate	Ultra-rapid plate
Relative sensitivity	0·01	6	10	150	400
No. of separate lines per millimetre .	125	62	42	35	29

206. In addition to the contractions and distortions which occur in photographic images on film or on paper because of the nature of the support, errors of position may also arise in photographic images on rigid supports on account of contractions and distortions of the gelatine itself during drying, due to the action of the oxidation products of the developer. Further errors of position may arise due to the unsymmetrical intensification of the borders of images close together, causing a mutual attraction between neighbouring images.

These different sources of error need only be considered in scientific photography and photocartography[1]. The mutual influence of adjacent regions of an image is generally lessened by using developers free from solvents of silver salts (e.g. ferrous oxalate). The effect of drying is reduced when this takes place slowly and uniformly in a moist atmosphere, or when it is accelerated by the use of alcohol. The effects of irregular drying can be overcome by washing the plate afresh and drying it under suitable conditions. Accurate measurements should never be made on the marginal regions of a photographic plate, or anywhere within about half an inch of the edge.

[1] The reciprocal of this limit of resolution is sometimes called the *resolving power* or the *separating power* of a sensitive film. Thus the resolving power is the maximum number of equidistant parallel lines per unit length which can be separately distinguished. It is evident that for obtaining given details in the photograph of a subject the negative can be of smaller size, as the emulsion used possesses a higher resolving power, the final image being made by enlargement.

The results of resolution measurements on photographic images depend largely on the numerical aperture of the microscope lens used for the reading. A lens of very large aperture having almost no depth of field permits the examination to be limited to the superficial layer, which is perfectly sharp, whereas a lens of small aperture with great depth of field brings in all the thickness of the image and therefore the layers where the image is much less sharp (E. Goldberg, 1935).

[2] Confusion often arises in making comparisons between developers from the point of view of fineness of the image or fineness of the grain when the different plates are not developed to the same degree of contrast. Every developable grain will develop completely if it is given time, and by arresting the development at an early stage the image is made up of finer particles, since each of them represents only a fraction of an originally complete grain. In this case, however, the contrasts are very weak.

[1] Faulty registering has been met with in the copying of large (32 × 36 in.) maps owing to the bending in the dark slide of plates secured only by their upper and lower edges (C. Bender, 1933).

CHAPTER XVII

CHROMATIC SENSITIVITY, ORTHOCHROMATISM, AND INFRA-RED PHOTOGRAPHY

207. Action of Different Spectral Radiations on Gelatino-bromide Emulsions. The photographic emulsion which is commonly termed " ordinary" should be used only in the somewhat unusual case when the subject consists entirely of blacks, greys, and whites. The human eye is most sensitive to green light, especially at small intensity, and warm colours (yellows and reds) appear lighter, at equal saturation, than violets or blues. On the other hand, unless specially sensitized to colour, the photographic emulsion is chiefly sensitive to the invisible ultra-violet

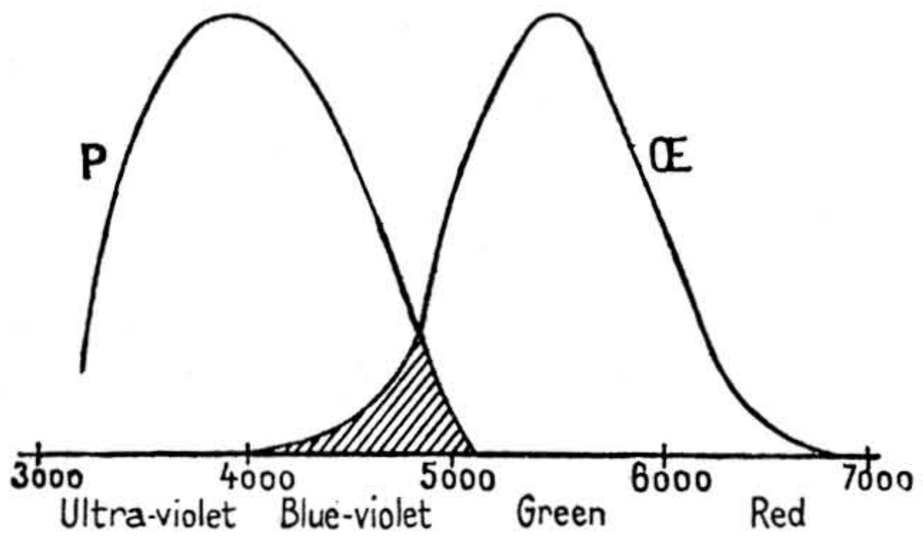

FIG. 141. CURVES OF VISUAL AND PHOTOGRAPHIC COLOUR-SENSITIVITY
Œ = Visual activity of different radiations.
P = Photographic activity of different radiations transmitted by optical glass.

and the physiologically less active violets and blues (Fig. 141). Thus, a plate sees objects almost as they would be seen by a colour-blind person (§ 3), or as we should see them through a blue filter, such as a piece of blue cobalt glass.[1]

The addition of suitable dye (generally erythrosine) to the emulsion before coating, or the immersion of the sensitive film in the same dye after coating, extends the sensitivity more or less into the green region. Such emulsions are said to be " sensitive to the green and yellow," or, more bombastically, *orthochromatic*,[2] a term which suggests that they are capable of rendering colours correctly. Actually, under the most favourable conditions, they can only represent natural colours as we should see them through a rather dark green filter, the reds appearing absolutely black.

The difficulties encountered in the first attempts to produce a photographic emulsion sensitive to all visible radiations led to the offer to the photographer of emulsions " sensitive to the yellow and red," which have lost all recognition since it has become relatively easy to produce *panchromatic* emulsions sensitive to the entire visible spectrum.[1] This has been done by means of various dyes derived from cyanine, which are used singly or in mixtures during manufacture, or by subsequent bathing.

The contrast factor γ (§ 202, foot-note) after equal times of development usually increases when one passes from ultra-violet to infra-red. The curve representing the variations of γ as a function of the wave-length often presents two stages, the one corresponding to the natural sensitivity in the visible spectrum, and the other to the range of colour sensitivity. This increase in contrast has been attributed to a more complete colour sensitization of the fine grains, which always tend to give more contrasty images and which would have a larger part in forming the image, their rapidity being greater to lights of longer wave-length (S. D. Threadgold, 1935).

208. Tests of Colour Sensitivity. The first idea which appears to occur to the practical photographer desiring to ascertain the chromatic qualities of a sensitive emulsion is to photograph a chart of colours, such as a sample card of paints, first with the emulsion under test, then with an ordinary emulsion, and to com-

[1] It would be incorrect to say that the ordinary emulsion is *insensitive* to the green, yellow, and red, but the times of exposure required to produce any effect with these wavelengths are so long that *for practical purposes* we can regard the emulsion as insensitive to these colours.

[2] The word *isochromatic* is sometimes used in the same sense. Strictly speaking, this should be applied only to a panchromatic emulsion equally sensitive to all radiations with equal energies, an ideal emulsion not yet realized in practice.

[1] The sensitivity of panchromatic *plates* often has a rather marked depression in the blue-green in order to permit of examination of the product and packing, plates having to be examined individually. This gap in colour sensitivity is not necessary in the case of films of which the manufacture and examination are entirely automatic and of which a statistical examination is made, it being assumed that if samples taken at random from point to point are perfect, the film between these points will be so likewise (E. Calzavara, 1935).

pare the results. Nothing is more deceptive than such a test.[1] To begin with, the surfaces of all objects diffuse a certain amount of white light. It is this reflected light only which produces the images of coloured objects which appear on ordinary emulsions. Secondly, long exposures tend to weaken by solarization the powerful effects produced by the violets and blues, thus enhancing the effects of the relatively small quantities of white light reflected from the other colours. Finally, and this concerns the reds in particular, a large number of red pigments are slightly tinged with violet, and the effect which may easily be attributed to the red will be solely a manifestation of the extreme sensitivity of the emulsion to the violet. More reliable results can be obtained by means of a series of colours photographed by transmitted light, or, better still, exposed in actual contact with the sensitive emulsion—and comparing the relative effects of the various colours. When the series of colours is made by the juxtaposition of definite coloured filters covered by a neutral grey graduated wedge, one can form an idea of the relative sensitivities to the various colours, and the " coefficients " for use with these screens.[2]

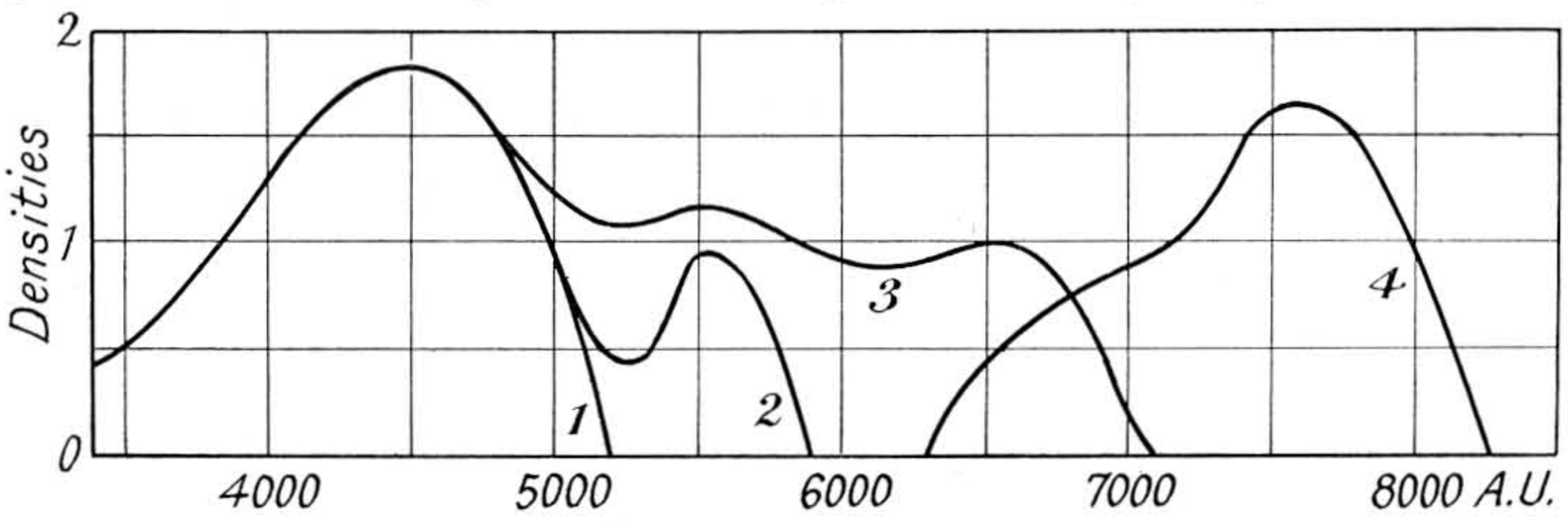

FIG. 142. CURVES OF SPECTRAL SENSITIVENESS OF EMULSIONS

209. The only really reliable method is the spectrographic one. The emulsion under test is used to photograph the normal spectrum of a source of light as near in composition to daylight as possible. The density of the resulting negative is measured at various points, and the density curve thus obtained. In Fig. 142 is given a series of density curves (spectra exposed to white light) corresponding respectively with (1) an ordinary emulsion, (2) an emulsion orthochromatized with erythrosine, (3) an emulsion panchromatized with isocyanines, and (1 + 4) an emulsion sensitized to infra-red with dicarbocyanines. Each one is chosen as an average representative of its class.

These curves show that the sensitivity to the blue remains predominant, and that a photographic rendering does not agree with our visual perception of the luminosities of various colours unless the intensity of the blues be weakened considerably. This is the part played by the yellow filter, which is a regular adjunct to the use of orthochromatic and panchromatic emulsions.

Comparison of the spectral curves of density of photographs obtained with different spectrographs, or in spectrographs of the same type illuminated by different light sources, leads to inexact conclusions. It is sufficient, for instance, to use a prism spectrograph or to illuminate a diffraction spectrograph by a naked incandescent lamp in order to cause the appearance in the red of a sensitivity very much superior to the sensitivity to blue, which does not agree with actual practice.

210. Yellow Filters. Brownish-yellow glasses, coloured throughout their substance, were used at first as yellow filters.[1] They were practically equivalent to a combined light orange-yellow

[1] There have been placed on the market (by Ilford Ltd. in 1927, and since then by various other makers) colour test charts specially prepared for tests of colour sensitivity, in which each coloured band is extended by a grey band of the same luminosity. The light is reflected with the same intensity by the two bands. The test of a perfect orthochromatic rendering is afforded by the exact match of the two scales in the photograph.

[2] As a deep yellow filter and a red filter transmit almost all the non-absorbed spectral regions while a blue filter or a green filter scarcely transmit more than 60 per cent, sometimes all that is done is to juxtapose on the neutral grey wedge a colourless filter, a yellow filter (limited towards 500 mμ), and a red trichrome selection filter. It is then admitted that the effect of the blue is equal to the difference of effects under the colourless and yellow filters, the effect of the green being the difference of effects under the yellow and red filters. Strictly speaking, the "neutral grey" wedge is never perfectly neutral, and it should be calibrated for each of three spectral regions considered (see also § 214).

[1] See Chapter XI for information concerning optical properties of coloured filters, their best working positions, and their preservation.

filter and a smoked glass, the latter absorbing all radiations uniformly without any useful effect.[1] The only really effective filters which could be prepared at that time were made of coloured liquids (solutions of metallic salts, or of artificial dyes) contained in glass cells with parallel sides.

The enormous progress made since 1900 in the methods for the preparation of gelatine filters (coloured gelatine[2] unprotected or sealed between two pieces of plane-parallel plate glass) has gradually led to the abandonment of all other types.

Yellow filters of very different absorbing powers are used, according to circumstances. In Fig. 143 are given the absorption curves of several standard filters, as follows—

oo Practically colourless screen, absorbing only the ultra-violet.

1, 2, 3, Compensating screens of various depths, absorbing more or less of the blue and violet.

G Contrast screen, completely absorbing blues and violets.

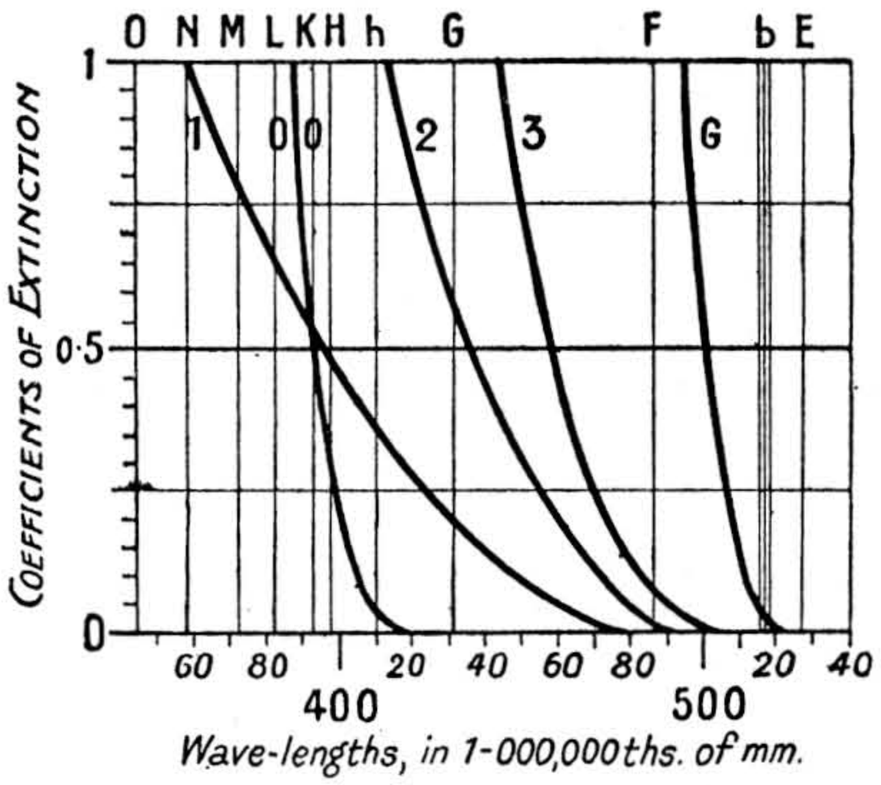

FIG. 143. ABSORPTION CURVES OF LIGHT-FILTERS

[1] In spite of the advances made in their manufacture, filters of coloured glass are not so uniform nor so transparent, at equal efficiency, as filters of dyed gelatine. Their one advantage is less fragility. A reputable maker of yellow glass filters states that he scraps filters of which the uniform absorption (equivalent to the incorporation of a smoked glass) exceeds 15 per cent.

[2] The basic dyes (§ 602) are usually those that have sharply cut absorption bands, but they are rather unstable and, therefore, acid dyes are preferred for preparing colour filters. These have an almost as sharp an absorption, but are far more stable. The direct dyes (used especially for dyeing cellophane) are very permanent, but their absorption bands are shaded off and they can be used for decorative purposes only. All the dyes transmit infra-red.

Though normal orthochromatic filters are usually yellow,[1] it does not necessarily follow that all yellow filters are suitable for orthochromatic work.[2]

It may be said that, in conjunction with a suitable yellow filter, an orthochromatic emulsion records different colours with luminosities comparable with the apparent luminosities of the colours when viewed through green spectacles. Under the same conditions, a panchromatic plate records the colours with as nearly as possible the same luminosities as we should assign to them when viewing with the naked eye.[3]

211. The Factors of a Colour Filter. The use of a coloured filter, which absorbs a greater or less proportion of the photographically active rays, necessitates an increase in the time of exposure to obtain the same densities when exposing on a neutral grey scale, with and without the filter. The ratio of the exposure times with and without filter gives the *coefficient* (or *multiplying factor*, or, simply, *factor*) of the filter for the particular type of emulsion and illumination employed.

Many photographers imagine they have completely defined a colour filter by giving *one* factor. Now, two filters having the same factor with respect to a *given emulsion*, and under given conditions of illumination (that is to say, two filters through which the optimum times of exposure will be the same multiples of the optimum times of exposure without the filters), may have very different factors, with respect to another emulsion or under different conditions of illumination, and under the same working conditions these filters may produce very different results.

212. When viewing objects by daylight, the relative effects of the three colours on the eye are in the following approximate proportions:

[1] The most perfect modern panchromatic emulsions being much more sensitive to red than to green, it is customary to use with them greenish yellow filters absorbing a trace of red in order to avoid an incorrect predominance of red in photographic rendering.

[2] In particular, special filters for use with plates for colour photography necessarily transmit too much violet and blue to form efficient orthochromatic filters.

[3] Some manufacturers of panchromatic plates will supply on demand a filter through which the luminosities of the various colours appear to the eye as they would be registered on the plate used without filter. By superimposing on this visual filter the filter it is proposed to use for the photograph, the subject is seen with the same relative luminosities it will have in the final photograph.

red, 34 per cent; green, 60 per cent; and blue, 6 per cent. The ideal filter reduces the respective effects on the sensitive emulsion to these proportions. We can see from this that the most suitable filter for a certain type of emulsion will not be as suitable for another very different type of emulsion.

Consider the case of a panchromatic emulsion, equally sensitive to the three groups of spectral radiations. This has not yet been realized in practice, it is true, but has been very nearly approached owing to the great progress since 1905. What should be the absorption of a filter giving, in conjunction with this emulsion, a photographic rendering of colours similar to the representation by an artist of the same colours in a charcoal drawing or engraving?

If we assume that in daylight the energy is distributed about equally between the three large spectral regions in question, i.e. 33 per cent for each, we can say that the intensities of each group will be converted to the desired relative values by a filter transmitting 51 per cent of the red, 90 per cent of the green, and 9 per cent of the blue. This yellowish-green filter thus transmits altogether half the white light, and this will be compensated if we double the exposure.

Suppose we use the same filter with an orthochromatic emulsion practically insensitive to the red, and having a spectral sensitivity to the green and blue of 20 per cent and 80 per cent respectively. Apart from subjects consisting entirely of blue and greens, the result cannot possible represent the visual impression, since the red radiations, so active to the eye, have no action at all on this emulsion.

With a filter transmitting 90 per cent of the green and 9 per cent of the blue, the photographic effect through this filter will be: for the green ($0{\cdot}20 \times 0{\cdot}90$), or 18 per cent of the total effect when the filter is not used, and for the blue ($0{\cdot}80 \times 0{\cdot}09$), or 7·2 per cent, making altogether 25 per cent. To compensate, we must in this case give four times the exposure. Further, while the effect of the blue in the formation of the image on a panchromatic plate represents only 6 per cent of the total effect, it represents in this case ($7{\cdot}2/25{\cdot}2$) = 28·5 per cent of the light-energy utilized. The efficiency of the filter is thus considerably reduced.

Finally, let us suppose that the same yellow filter is used with an ordinary gelatino-bromide emulsion, in which 2 per cent of the image is formed by the green and 98 per cent by the blue. The introduction of the filter reduces the effect of the green to ($0{\cdot}02 \times 0{\cdot}90$), or 1·8 per cent, and of the blue to ($0{\cdot}98 \times 0{\cdot}09$), or 8·8 per cent, altogether 10·6 per cent. To obtain the same image of a grey scale we must expose nine times as long as without the filter. The effect of the blue in the image thus formed amounts to (8·8/10·6), or 83 per cent of the light-energy utilized. The efficiency of the filter in this case is thus practically nil.

Whilst, relative to a constant illuminant, a given yellow filter may have factors equal to 2, 4, and 9 respectively, for the various emulsions considered, a neutral grey filter transmitting uniformly 50 per cent of all radiations has an invariable factor of 2, whatever the emulsion, and an efficiency of 0.

It is only due to the fact that the filters used in the early days of orthochromatism had efficiencies almost zero (being little better than smoked glasses) that they showed in all circumstances an invariable factor. Moreover, with orthochromatic plates, they gave results little different from those obtained on ordinary emulsions. These facts are largely responsible for the erroneous ideas which have spread among photographers.

213. We shall discover other variations in the value of the factor if we consider how the ideal panchromatic plate behaves, in conjunction with a greenish-yellow compensating filter, relatively to various kinds of artificial illuminants. The data for various cases are given in the following table.

		Mercury vapour lamps	Arc lamps	Gas-filled lamps (half-watt)
Approximate percentage proportions of rays of different colours in the light-source	Red	—	60	61
	Green	10	25	32
	Blue	90	15	7
Proportion of rays of different colours transmitted by the filter relatively to 100 white light without filter	Red	—	30·6	31·1
	Green	9	22·5	28·8
	Blue	8·1	1·3	0·6
	Total	17·1	54·4	60·5
Factor of filter		5·9	1·8	1·65
Net effect of blue in formation of image		47%	2·4%	1%

In short, the factor of a filter is higher the more active the absorbed radiations in their effect on a given emulsion, or the greater the proportion of them in the light emitted by the illuminant used.

214. Experimental Determination of the Factors. The only elements of the subject which retain their relative luminosities after introduction of a colour filter are the whites, neutral greys, and blacks. Each value of the factor of a colour filter is, thus, the ratio of two times of exposure, which, with and without the filter, give images of the same densities, all other working conditions being the same (same emulsion, same illumination, same development, etc.). We therefore choose a subject, such as a photograph on paper developed to a neutral tone, or a gradated scale on black carbon tissue, and make tentative exposures until we obtain through the filter an image equivalent to that obtained without the filter.

The cost of these trials can be greatly reduced by making them on different parts of the plate or film for the use of which we wish to determine the factor. The parts of the sensitive film not being used in a test are covered successively by means of masks suitably placed in the camera, or the photograph chosen as subject may be mounted to a slide in front of a deep box lined with black velvet, so as to afford an absolutely black background. Several exposures can then be made, sliding the original between each, without any other adjustment.[1]

215. Self-screened Orthochromatic Emulsions. Attempts have been made to relieve the photographer of the need to use colour filters by putting at his disposal orthochromatic emulsions containing, in addition to the colour sensitizer, a yellow colouring matter, which to a certain extent plays the part of the screen.

From the fact that this colouring matter, which absorbs the excess of the blues and violets, is *in* the emulsion, instead of acting on the incident light before it reaches the emulsion, it is necessarily ineffective for the part of the image recorded in the surface layers of the emulsion. Actually the effect will be produced by the superposition of two images, of which the superficial one is practically identical with one obtained on a normal orthochromatic emulsion used without a filter, and consequently very slightly different from that produced by an ordinary emulsion. The deeper image formed by the light filtered through the yellow surface layers is, however, orthochromatic.

Any working condition which causes the surface image to predominate (short exposure, rapid development in a concentrated bath, etc.) will reduce the orthochromatic effect of these emulsions, and the best results are obtained by favouring the formation of the deeper image (ample exposure,[1] slower development in a relatively dilute bath). The orthochromatic effect will be always more marked in the light parts of the subject (e.g. sky) than in the dark parts (shadows). Under the most favourable circumstances these plates give (in daylight) results comparable with those obtained on normal orthochromatic emulsions with a light yellow filter, of which the factor is about 2.

The directions " for use without screen " need not be taken literally, and the orthochromatic efficiency of these plates will be greatly improved by using even a light yellow filter with them.

216. Orthochromatism in Practice—Portraiture. As is well shown by Figs. 144 and 145, the advantage of orthochromatism is indisputable (and is not disputed) in such cases as flowers, and some photographers consider it quite sufficient to use orthochromatic emulsions, refusing to adopt panchromatic plates or films.[2] Others, however, in spite of all evidence, still deny the advantage of orthochromatic methods.

From what has already been set forth (§ 212), it is clear that with a panchromatic emulsion the efficiency of a yellow filter is always greater than with an orthochromatic emulsion, the factor considerably lower, and the exposure consequently shorter. It is in these respects

[1] The determination of the factors of colour filters under various conditions can be made straight away if there are available a neutral grey wedge and relatively long bands of gelatine filters identical with those used in practice. It is sufficient to expose to the light a sample of the sensitive material, in respect to which we wish to ascertain the factor, under the combined neutral grey wedge, and bands of coloured gelatine, these being placed in the same direction as the density variations. After development, it will be found that the sensitive film has recorded bands of identical gradation, but more or less shifted relative to the part exposed without filter. The product of the shift and the density variation per unit of length of the neutral grey screen represents the " logarithms " of the required factors (L. P. Clerc, 1911).

[1] These circumstances are also those favourable to halation (§ 231). Thus, when plates coated with these emulsions are used, they should be protected from this effect.

[2] It is only right to add that for a long time the quality of panchromatic emulsions left a great deal to be desired, and the necessity of groping in total darkness when handling them did not tend to popularize them. The great progress made by many makers, and the possibility of developing these emulsions in a relatively bright light after desensitizing (Chapter XXVII), have rendered their use as easy and certain as that of the ordinary emulsion.

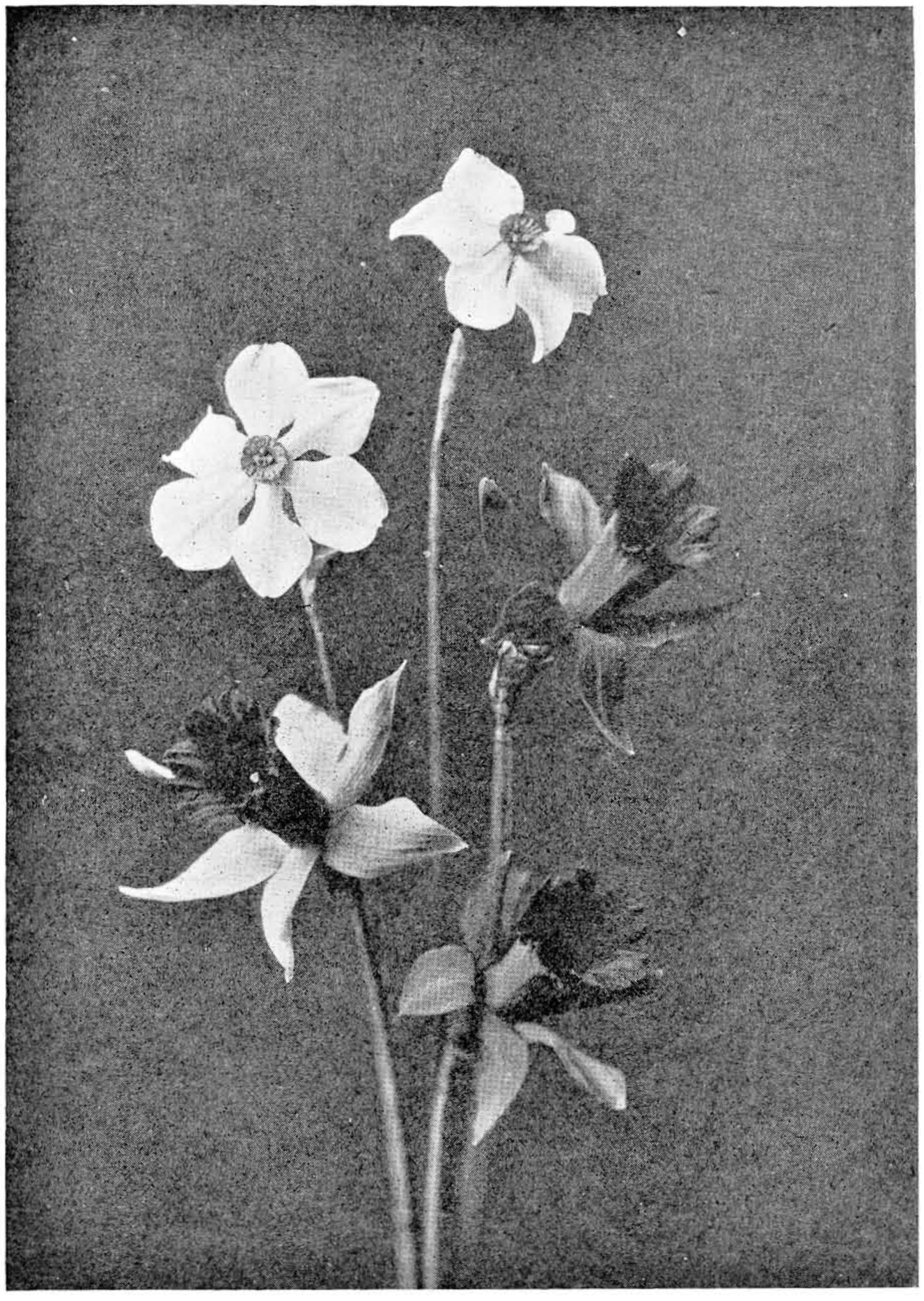

FIG. 144. FROM NEGATIVE ON ORDINARY PLATE

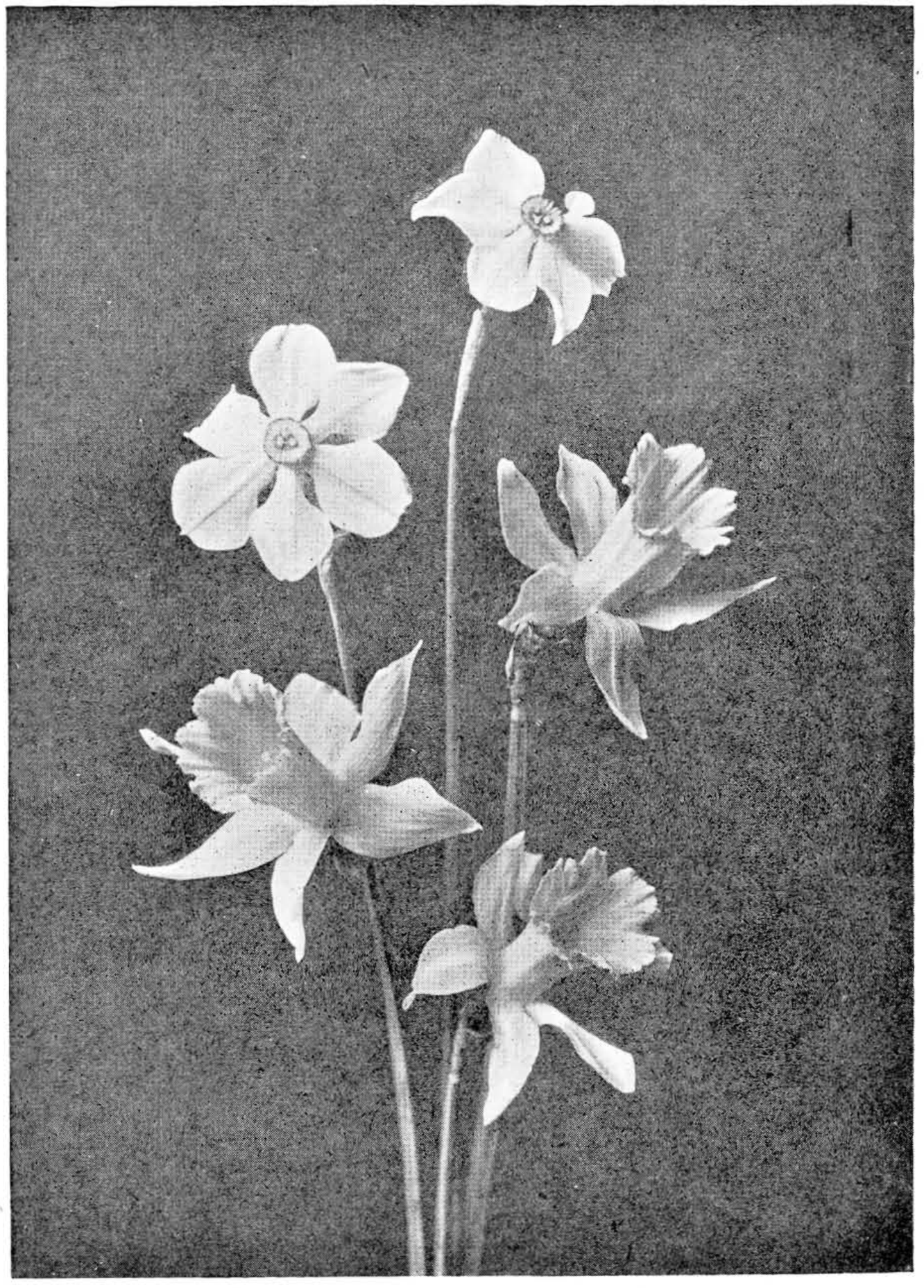

FIG. 145. FROM NEGATIVE ON ILFORD SCREENED CHROMATIC PLATE

NARCISSI AND DAFFODILS

(Originals by courtesy of Ilford Limited)

that the panchromatic emulsion has a marked advantage over the orthochromatic emulsion, excepting, of course, in the somewhat rare cases when the subject is devoid of apparent reds.

The essential part played by the red radiations in the colouring of the face is shown by the complete alteration of the colours in the light of a mercury arc. This quality of the mercury light is not, however, a disability in cinema studios, where the actors are "made up." The orange coloration of the skin, with spots and red streaks, yellow freckles, and small reddish veins running along wrinkles, are not particularly noticeable on anyone's face, but are considerably accentuated by a photograph on an ordinary emulsion. In order to avoid rendering the skin too dark, the photographer over-exposes, thus sacrificing detail and gradation in light clothing.

The use of an orthochromatic emulsion with a yellow filter[1] considerably assists the rendering of blonde or red hair, blue eyes, the purplish shadows which give the eyes their relief, lips, and certain colours of the dress, but still leaves a great deal to be retouched, e.g. minute defects in the skin, wrinkles, etc. The use of panchromatic plates, however, leaves nothing for the retoucher to do beyond taking out mechanical defects in the sensitive film, and the "rejuvenescence" of the sitter, often necessary but obviously not capable of accomplishment by any photographic process. It is very pleasing to disguise the signs of increasing age, and it is certainly the use of a panchromatic emulsion with appropriate illumination that avoids this inevitable change more satisfactorily than the use of ordinary emulsions.[2]

217. Landscape, Aerial Perspective and Mist. Among pictorialists in photography—those who exercise a large measure of personal control and produce works which owe nearly as much to the brush as to the photographic process—orthochromatic methods are often considered useless for landscape photography. But for those who wish to obtain by purely photographic methods a tone rendering as near as possible to the interpretation of an artist using only black and white, the only process for photographing a landscape is on an orthochromatic or panchromatic emulsion with an appropriate colour filter.

Two things have to be considered in the use of orthochromatic methods in landscape work: the rendering of distance, and the interpretation of different colours.

218. In a negative of open country, taken without special precautions, the image of the distance is always shrouded in a more or less dense mist, in which details disappear which, at the time of taking, were easily perceptible to the eye through the bluish haze near the horizon.

The effect of this *atmospheric haze* is experienced nearer to the camera according as the atmosphere is less pure. Even when the atmosphere appears to us absolutely clear, it is in fact a turbid medium, the effect of which is greater in correspondence with the space extending between distant objects and the lens. Like all turbid media, it is practically transparent to yellow and red rays, but stops in increasing proportions greens, blues, violets, and ultra-violet rays. These radiations are not, however, absorbed appreciably, but diffused in the same way as any light is diffused by a fog or mist[1]; hence the peculiar appearance of photographs obtained by ultra-violet radiations solely (§ 4).

The following observations serve to prove the selective properties of the atmosphere. Dark objects a long way off always appear bluish, and snow, golden. The sun appears redder the lower it is on the horizon because it is then seen through a greater thickness of air. The pure blue of the sky at the zenith in fine weather is due to the light diffused by the atmosphere, and if the sky passes to a bluish white towards the horizon, it is because the light then is diffused by a thicker layer of a more diffusing

[1] With the exception of the mercury lamp, all the usual sources of artificial light emit radiations richer in green and richer still in red than daylight. They may, therefore, be regarded as emitting white light, the blue and violet of which would be more or less completely absorbed by a yellow filter. This indicates the possibility, when working with such illuminants, of reducing the time of exposure (or reducing the amount of light used) by employing panchromatic emulsions, which make use of all the light rays instead of only a small proportion, also the possibility of being able to dispense with the yellow filter more frequently when working with orthochromatic or panchromatic emulsions (these latter may even require a blue-green filter to absorb the excess of red).

[2] The photograph of a negro on an emulsion sensitive to infra-red produces, as regards skin pigmentation, the almost complete illusion that it is the photograph of a white.

[1] The respective intensities of the various radiations in light thus diffused are inversely proportional to the 4th power of the wave-length (Lord Rayleigh). When passing from ultra-violet 3,500 to infra-red 8,000 A.U., the intensity of mist is therefore reduced in the relation $(8/3{\cdot}5)^4$, i.e. 27 : 1.

medium (by reason of the dust, always more plentiful near the ground), the blue radiations being accompanied, but in reduced quantities, by the other components of white light. Finally, in a fog, shadows appear blue, and a lamp appears to emit red light as soon as one walks away from it.

The haze of distance and the progressive weakening of the coloration form the principal factors in *aerial perspective*, which gives one an idea of the respective distances of the various elements of a landscape. The use of an emulsion which is only sensitive to the blue, violet, and ultra-violet, necessarily exaggerates the effect, which many artists have used to excellent advantage but which cannot be an advantage in straightforward photography. The use of orthochromatic or panchromatic plates with a suitable yellow filter[1] renders the contrasts of the distance at their visual value or exaggerates them, the photograph recording details which could not be seen with the naked eye at the time of exposure.

There are two applications of photography in which atmospheric haze is the cause of special difficulties, viz. photography at a great distance with telephoto lenses of high magnification, and aerial photography at great altitudes. In both cases the subject is entirely situated in the distance, of which the bright parts will be yellowed and the dark parts blued. Hence, considerable reduction of contrast, so that the image on the negative is very faint, a practically uniform haze being chiefly recorded. To reduce or remove atmospheric haze, in this case, filters of greater absorption than the usual orthochromatic filters must be used.

In *telephotography* long exposures have to be made, owing to the low intensity of the greatly magnified image, and one is forced to use a stout camera and a heavy rigid tripod, so that a deep yellow filter may be used, e.g. a filter having an absorption represented by curve *G* in Fig. 143. This transmits only the green, yellow, and red, and has a factor somewhere between 8 and 20, according as a panchromatic or orthochromatic emulsion is used with it.

[1] Numerous experiments have established the fact that of the different radiations from a misty atmosphere the invisible ultra-violet occasion the most difficulty. One can obtain an appreciable improvement in the rendering of distance by using colourless or practically colourless filters absorbing ultra-violet and practically no other rays. Conversely, a yellow filter which absorbs the violet and transmits the ultra-violet, although appearing identical with a correct filter, is practically useless from this point of view.

In *aerial photography*, where the circumstances always necessitate a very short exposure of the order of $\frac{1}{100}$ sec., it is not generally possible to use filters of this degree of absorption, but the contrast of the image will be greater, and in consequence its legibility improved, according as it is possible to use a filter of greater depth.[1]

219. The use of a light yellow filter, however light it is, suffices to increase the contrast between the white clouds and the deep blue of the sky, and at the same time to reduce the contrast between the sky as a whole and the ground. A yellow filter of factor of 2 at most on a panchromatic emulsion, or 3 on an orthochromatic emulsion, reduces the sky to its correct value relative to the earth, whilst still allowing the camera to be used in the hand. The greens of spring will, at the same time, be greatly lightened, but the greenish-blue foliage of fir trees will not be greatly improved—especially if one uses an orthochromatic emulsion having a minimum sensitivity corresponding with the greenish-blue. A deeper yellow filter, used with a panchromatic emulsion, for which it has a coefficient of 3 to 4, assures a satisfactory correction of the blue-greens and also of autumn foliage, which are practically impossible to render correctly on an emulsion insensitive to red.

In orthochromatic photography, insufficient exposure tends to give an effect of over-correction, which is as undesirable as the absence of all colour correction. In a photograph of a landscape taken on an under-exposed plate the sky tends to be too dark, the distance too strong, and the nearer parts too contrasty. Actual over-correction with normal exposure is very rare, and occurs only when an excessively absorbing filter is used.

220. Photography of Coloured Objects. The photography of coloured objects present considerable difficulties in some cases, especially when the " effects " of the subject to be reproduced are entirely dependent on the contrast of colours, the tonal contrasts being very weak, as is the case, for example, with tapestries and

[1] The English and American air services, using very wide-aperture lenses and rapid panchromatic plates, having high sensitivity in the red, have been able, with the help of reddish-orange filters, to obtain excellent photographs of ground covered with a light fog, through which only occasional details of the earth appeared visible when flying over it. One cannot hope, however, to pierce an opaque fog by using red or infra-red radiations

many modern pictures. An isochromatic rendering, in the strict sense of the word, which represents each colour by an intensity of grey proportional to its luminosity, will cause the design of the object reproduced to disappear almost completely, whilst non-orthochromatic photography will ruin both the tones and the forms, a pattern in green and red being rendered as a uniform black. No fixed rule can therefore be given. Taking into consideration the type of subject and the result required, a different filter must be chosen in each case, so as to render each colour with a luminosity which differentiates it from the adjoining colours.

In the more general case, when the subject presents both contrasts of colour and tone, better results can often be obtained by using a panchromatic plate and a yellow filter,[1] rendering each colour by the luminosity with which it is customarily seen by the eye (Figs. 146 and 147). If this general correction leads to neighbouring colours being rendered in the same tone, it may be advantageous to lighten the reds a little relatively to the greens, in order to compensate for the normal attraction of the eye to the reds.

221. When it is wished, by reason of the character of the subject, to make the reds, greens, or any other colour, predominate, or when it is desired to minimize the contrasts, e.g. in a photograph to be coloured, while maintaining the limits of the hues, the use of a series of coloured filters of different depths and colours, ranging from greenish-yellow to orange, may be dispensed with by using the process of *multiple exposures*.

A rigorously isochromatic reproduction may be made by using in succession during the exposure the three normal three-colour filters (Chapter XLIX), blue-violet, pure green, and vermilion-red, each of them being used for one-third the time of exposure necessary to obtain a complete image (*triple exposure* of Lippmann).

Such exactness is rarely required, the blues nearly always being darkened relatively to the greens and reds, and a good orthochromatic reproduction is generally obtained by using only green and red filters, e.g. for the respective times of exposure equal to two-thirds and one-third of the normal time of exposure for the complete image. To cause the reds to predominate, the proportion of the exposure under the red filter is increased and the proportion of exposure under the green filter correspondingly reduced. The greens may be lightened relatively to the reds by variation in the reverse order.

222. The photography of almost monochromatic objects taken by themselves must be treated in a very different way.

The practical rules follow from the following principles—

(1) To render the various intensities of a single colour by gradated densities from black to white (an object consisting only of intermediate shades between a pure colour and white), the photograph must be taken by means of rays absorbed by the colour in question, but the absorption must only be complete in the maximum intensity of the colouring. For example, for a piece of Delft ware, having blue decoration on a white ground, a panchromatic emulsion and red filter should be used.[1]

(2) To reproduce, by gradated densities from black to white, the various luminosities of a uni-coloured object, presenting only intermediate shades between a saturated colour and black, use must be made of only the radiations most completely reflected by the colour of the object. For example, to show the veins of a piece of mahogany furniture (without considering the ground), a panchromatic emulsion should be used with a red filter.

(3) Maximum contrast (Case 1) being incompatible with maximum detail (Case 2), if detail cannot be sacrificed to contrast, or vice versa, that is to say, if the subject consists of both light and dark shades of the same colour, a compromise must be made between the two contradictory conditions given above.

These conditions are fulfilled with sufficient approximation by choosing from a set of three-colour filters that through which the subject appears to greatest advantage.

223. Photography with Infra-red Rays.[2] There

[1] A perfect colour rendering is possible only if the filter absorbs the near ultra-violet transmitted by glass, and if the emulsion is not sensitive to infra-red. Some whites are, as a matter of fact, rendered as blacks if ultra-violet has a dominant influence, and infra-red renders as white or as a very light grey a large number of colours and even certain blacks.

[1] An application of this principle has been made by E. Calzavara (1927) to the photo-micrography of histological specimens coloured by a cryptocyanine (sensitizer for the infra-red), the photographs being recorded entirely by the infra-red on emulsions sensitized by the same cryptocyanine, with interposition of a filter absorbing all other active radiations.

[2] It should be borne in mind that cameras used for infra-red photography must not contain any material transparent to these rays, unless covered with an

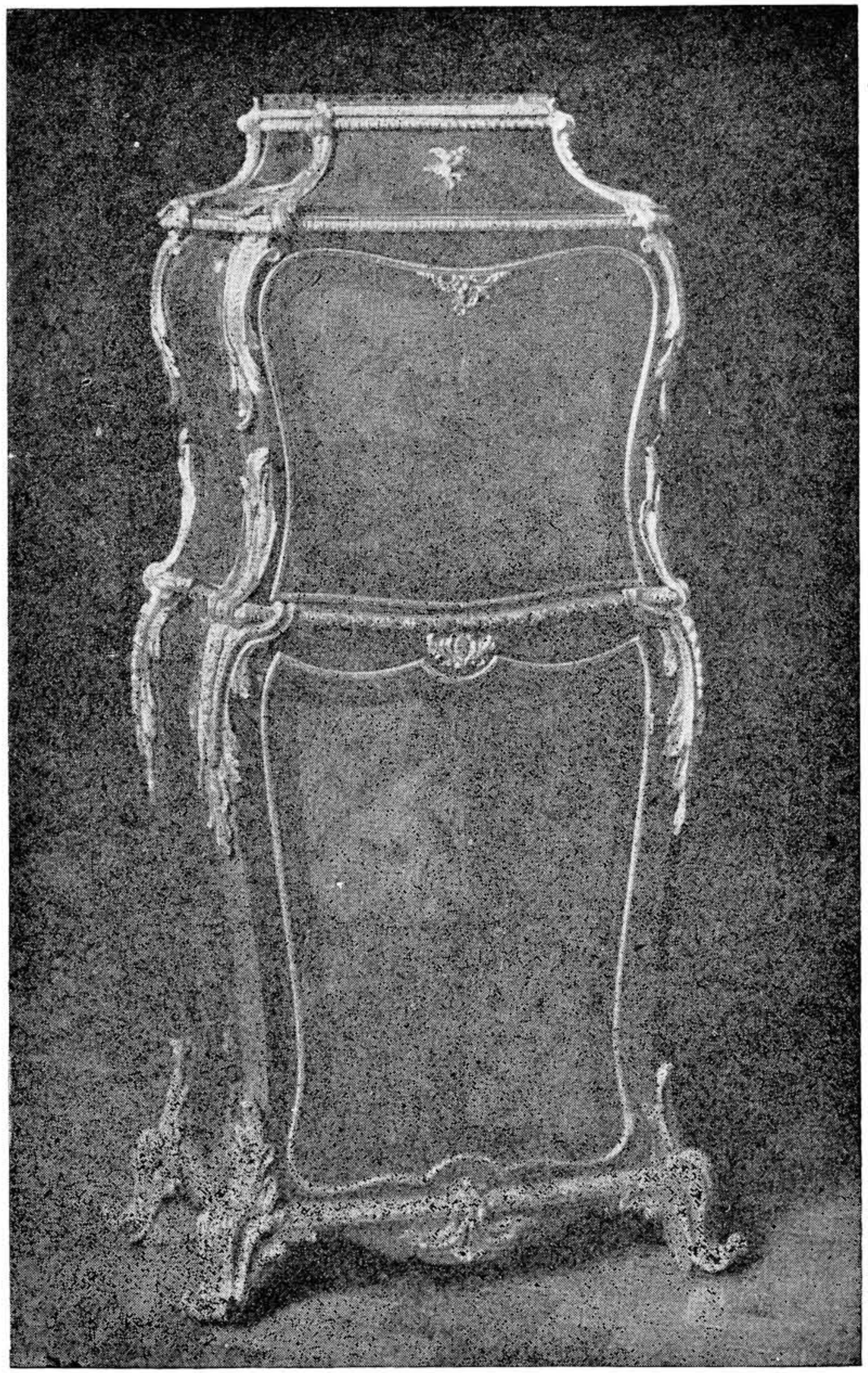

FIG. 146. FROM NEGATIVE ON ORDINARY PLATE

FIG. 147. FROM NEGATIVE ON ILFORD PANCHROMATIC PLATE WITH MICRO NO. 5 FILTER

(Originals by courtesy of Ilford Limited)

are commercial infra-red emulsions of three types with spectral limits of sensitivity at about 9,000, 11,000, and 13,000 A.U., their respective maxima being at about 8,500, 9,500, and 10,500 A.U. All these emulsions are practically insensitive in a more or less extensive area comprising most of the green and the yellow.

Whereas plates and films of the first type can be kept for several months without special precautions before becoming fogged to a troublesome extent (provided that their packing includes a sheet of metal foil), those of the second type must be stored in a refrigerator, and those of the third at the temperature of carbon dioxide snow (−95° F.) almost up to the moment of using (W. Dieterle and W. Zeh, 1935). Even so they undergo a progressive diminution of rapidity which, however, leaves no trace after hypersensitization (§ 226).

These sensitive emulsions are the slower as their sensitivity advances farther into the infra-red. With the fastest it is at present (1936) necessary, in the case of photography by daylight, to expose under the red filter from 50 to 100 times as long as would be required with an ordinary emulsion of medium speed used without any filter. This exposure factor reaches 400 for photography with a black filter (through which the sun appears red). These numbers, however, indicate merely an order of importance, for there is no proportionality between visible intensity and infra-red intensity in daylight (G. B. Harrison, 1932). For a portrait group taken in darkness, the subjects receiving only infra-red light given by incandescent lamps through black filters, the power of the lamps must be about 1 hectowatt per square metre of floor in order to permit an exposure of 1 second at $F/3{\cdot}5$. In such photographs (the same result being obtained if the filter is mounted on the lens) faces appear chalky with colourless lips, the eyes are shown as black circles, and all the features are very accentuated.

With an exposure of a few hours it is possible to photograph in complete darkness an electric flat-iron heated at its normal rate, or an object, such as a plaster bust, "illuminated" by two such irons.

We have already mentioned (§ 4 and 218) the applications of infra-red to long distance photography (see Frontispiece). Highly exaggerated statements have been made as to the possibility of photography in a fog. In a slight fog the range of infra-red photography is scarcely twice that of the visual range (equal to that of photography in a red light), and the increase in range is almost nil in fog.[1]

We cannot enumerate here the very numerous technical and scientific applications of infra-red photography, nearly all of which are based on the difference of transparencies and reflecting power towards infra-red and towards daylight. While carbon, in the different forms in which it is used in painting, behaves like black, as also do certain mineral pigments (iron blues, copper greens, and all mixtures in which they occur in large proportion), most usual pigments behave like white or light grey, hence there is an almost complete suppression, in the photograph of a coloured object, of everything that is not a black or a shadow.

224. Colour-sensitizing. Colour sensitivity (sensitivity to the green and red and by extension to the infra-red) is usually conferred on photographic emulsions by treatment with dyes[2] called chromatic sensitizers or optical sensitizers.

Until fairly recently the sensitizing dyes were manufactured by the dyestuffs industry. The most efficient ones among them are now produced by plate and film makers for their own use. There is, therefore, no longer any advantage for the consumer to undertake the colour sensitization of ordinary emulsions, especially as manufacturers place at his disposal plates and films whose colour sensitivity satisfies all requirements. We will therefore refrain from giving any information on the practice of colour sensitization, and will content ourselves with a general survey of the subject.

opaque coating (made with lampblack, for instance). While all metals, even the thinnest sheets, are perfectly opaque, many woods are more or less transparent in thicknesses under $\frac{1}{8}$ in. (mahogany and deal are particularly transparent). Unless containing opaque fillings, ebonite, bakelite, and vulcanized fibre are transparent, as are also leather camera bellows and paper.

[1] In particular, no success has attended attempts made to facilitate navigation in a fog by taking infra-red photographs and examining them in a very short time afterwards.

[2] Note, however, that various rapid emulsions have been sensitized to the red or panchromatized by the action of weak solutions of some mineral salts, iodides, cyanides, and alkaline bisulphites (Renwick, Capstaff and Bullock, 1920) followed by washing in water for a considerable time. While this method of sensitizing is not of practical interest, it has great theoretical importance. It explains the sensitivity to the red shown to exist in various very rapid emulsions containing silver iodide. Although this sensitivity is too small to be of any use, it is sufficient to cause fog if these emulsions are handled in red light.

Almost all the known dyes have been tried with this object in view, and it has been shown that the number of them suitable for colour sensitizers is very limited. The greatest number of colour sensitizers known belong to a group of the derivatives of fluorescein (erythrosine, eosine, etc.) and a group of cyanines (cyanines proper, isocyanines, pseudocyanines, carbocyanines, and their oxa-, thia-, selena-, etc., derivatives). The most satisfactory strengths of the solutions of these dyes are always extremely small; some of them show very marked activity in a solution of 1 part in 1,000,000.

The mechanism of colour sensitization is not yet completely known;[1] our present knowledge is limited to the following facts—

(1) All the sensitizers are rapidly decolorized by exposure to light in weak solutions or in thin films.

(2) A dye only acts as a colour sensitizer if it effectively dyes the grain of silver halide. Generally speaking, all circumstances which favour the dyeing of the grain increase the colour sensitivity.[2]

(3) An emulsion impregnated with sensitizer shows an absorption band in the spectral region corresponding to the colour sensitivity conferred by the dye.[3]

It is important to note that the fulfilment of these necessary conditions is not sufficient; many dyes possess these properties without being sensitizers.

225. Whilst the colour-sensitivity produced in a rapid gelatino-bromide emulsion is always less than the blue-sensitivity, which is slightly decreased by the treatment, the colour sensitiveness may be very much greater than the blue sensitivity in unripened or only slightly ripened silver bromide emulsions (grainless emulsions, collodion emulsions, and positive emulsions), in emulsions deprived of their nuclei (§ 197), and in silver chloride emulsions. The general sensitivity to unfiltered white light is not affected appreciably in the case of very rapid emulsions,[1] but it is considerably increased with slow emulsions by the colour-sensitizing, though still very much smaller, after this treatment, than the initial sensitivity of the rapid emulsion.

Any circumstance tending to favour the increase of general sensitivity of a rapid emulsion (except the case of sensitizing by auxiliary exposure mentioned in note to § 205) causes a considerable fog, rendering the emulsion useless (at any rate for chemical development).

The choice of the emulsion to sensitize plays an important part in the quality of the image. Sensitization by the isocyanines and analogous dyes (the only ones considered here)

remembered that a *violet* solution of pinachrome (panchromatic sensitizer of the isocyanine class) dyes the silver bromide grain *red*, and the silver chloride grain *blue*. The excess of dye remaining in the gelatine is not merely inactive, its presence is very undesirable in that it absorbs the very radiations which are active on the dyed silver bromide complex before they reach it. Plates soaked in a solution of a dye and then washed are superior in sensitivity to plates coated with the same emulsion to which has been added at the time of coating a given quantity of dye. The reason for the superiority is that, in the former case, the excess of dye is removed.

[1] An attempt has been made to explain colour sensitization by assuming that the luminous energy absorbed by the dye is transferred to the silver halide on the surface of which the dye is adsorbed, without the dye itself being decomposed. However, in an emulsion sensitive to infra-red, where the relation of the mass of dye and the mass of silver bromide (both expressed in molecules) was 1 : 357,000, it was impossible to demonstrate in the infra-red a difference in absorption between the sensitized emulsion and the non-sensitized emulsion (O. Bloch, 1933).

[2] In particular, immersion of a photographic preparation in an alcoholic solution of a sensitizing dye does not produce colour sensitization, which appears only after washing with water. The presence of soluble bromides,which oppose the dyeing of the silver bromide, prevents more or less completely the action of the sensitizer. Preliminary washing of the emulsion or the addition of traces of silver salts to the sensitizing bath, by removing the soluble bromides or converting them into silver bromide, assists sensitization.

[3] This condition is obviously necessary since a photochemical reaction can be effected only by the radiations absorbed by the system. It should be noted, however, that the maximum of the sensitivity conferred by a colour sensitizer does not coincide with the maximum of the absorption bands of the dye used in aqueous solution. In the case of gelatino-bromide emulsion the shift of the sensitivity maximum is about 150 to 200 A.U. in the direction of the increasing wave-lengths. It will be readily understood that there may be shifts varying with the nature of the emulsion when it is

[1] A considerable increase in general sensitivity of rapid emulsions by colour sensitizing under certain conditions has been frequently proclaimed. Invariably, comparative tests before and after sensitization had been made with more or less reddish artificial light. The decrease in time of exposure, therefore, results not from an increase in general sensitivity but from the chromatic sensitization which enables the whole of the light to be used instead of a small fraction. Consider two emulsions (one ordinary and the other panchromatic) which in daylight require the same times of exposure. The panchromatic emulsion will always require a shorter exposure than the other in yellow or reddish artificial light.

However, some oxacyanines are very effective sensitizers for blue, thus increasing the speed of an ordinary emulsion without extending its spectral sensitivity.

always tends to increase fog; they therefore require an emulsion which has very little tendency to chemical fog before treatment.

226. Hypersensitization. In many cases hypersensitization permits an increase of the colour sensitivity of plates and films sensitized in manufacture (the speed being thereby increased from 2 to 4 times in the corresponding spectral area), without modifying to any marked extent the inherent sensitivity of silver halide in the blue-violet area.

An essential condition for success is absolute cleanliness. Only glass dishes cleaned each time before use must be utilized.[1]

Hypersensitization can be obtained by washing for about 5 minutes in running water, or in several changes of water; or by immersing for about 4 minutes in the following bath[2]—

Alcohol 90% or pure methyl alcohol[3].	5 oz. (25 c.c.)
Concentrated ammonia[4] . . .	5 dr. (3 c.c.)
Water to make	20 oz. (100 c.c.)

the one or the other operation being followed by drying as rapidly as possible in a current of air at room temperature, or in a light-tight box filled with desiccating materials (§ 281, footnote).

Emulsions thus treated must be used without much loss of time.

The efficiency of these various forms of treatment is due to the removal of soluble salts and excess of dye from the emulsion; to this must be attributed the specific action of ammonia on all the sensitizers; to this effect must be added the specific action of ammonia on silver bromide in the presence of gelatine, an action which tends to liberate traces of soluble silver salts which are absorbed by the sensitive grains (B. H. Carroll and D. Hubbard, 1932), thus neutralizing the troublesome influence which potassium bromide, always added to sensitive emulsions to render them stable, exercises on colour sensitization.

[1] Sensitization is not possible with the water sterilized by hypochlorite (*Eau de Javelle*) supplied over certain periods in many towns. In case of doubt, add a little ammonia to the water, boil, and use only after cooling again.

[2] Treatment with ammonia is not applicable to orthochromatic emulsions sensitized with pinaflavol.

[3] Not methylated spirit.

[4] Avoid the use of vessels made of nickel when using the ammonia bath for colour-sensitizing.

CHAPTER XVIII

PLATES, FILMS, AND NEGATIVE PAPERS

227. Supports of Sensitive Coatings. The terms plate, film, and photographic paper are applied to photographic products resulting from coating sensitive emulsion on to glass, flexible transparent material, and paper, respectively.

In Daguerreotype, which was the first practical photographic process, a thin sheet of silver-plated copper was used as the support, and the sensitive coating was made by treating the surface of the silver with iodine vapour. Later, in the case of ferrotype, a process still used by itinerant photographers, sheets of iron covered with black varnish and then coated with a collodion emulsion were developed to give an image appearing more or less white on the opaque black ground, thus forming a direct positive.

Many attempts have been made to use aluminium, or of steel plated with nickel, as a support for gelatino-bromide emulsions, either as a flexible band for amateur cinematography (the image being observed or projected by reflection), or as a rigid plate instead of glass in accurate photo-cartographic work, where measurements are made directly on the negative and where it would be advantageous to make use of sensitive materials as rigid as glass plates but less fragile.

228. Glass. The glass used in the manufacture of photographic plates is specially manufactured, and is, in fact, the monopoly of certain Belgian firms. It must be fairly flat, of uniform thickness, almost colourless, and as free as possible from bubbles or black spots. These qualities are rarely united in one glass, even in the highest qualities for picture framing, which are of much better quality than window glass. The sheets of glass, received in crates, are sorted according to thickness and quality, and stored for distribution as required. Except in the case of very large plates the size required is not the size coated. Medium-size plates are prepared by coating a sheet which is twice or four times the size required, afterwards cutting at right angles, with automatic machinery. For small plates, a sheet corresponding with eight or more is used. The glass is cleaned on both sides with alkaline solutions on machines having either rotating or reciprocating brushes. The plates, carried on endless belts, are rinsed in a large amount of water and then coated on the concave face,[1] on which the emulsion will ultimately be coated, with a *substratum* consisting of a small quantity of gelatine in strong alum solution. This enables the emulsion to adhere to the glass[2]; the plates then pass through a tunnel through which a current of warm air passes, and arrive at the end dry and ready to be transferred, on wooden racks, to the coating room.

The plates, loaded end-to-end on to the endless band of the coating machine, pass first under a coating trough, which distributes to them a uniform layer of liquid emulsion, and then through a cold tunnel, where the emulsion sets. The plates next pass to another endless band which, through moving more quickly than the first, separates them. On reaching the unloading station they are placed on racks for transport to the driers (drying rooms or continuous conveyor driers).

After drying is complete the plates are examined, cut up,[3] and wrapped, etc., for delivery to customers.

[1] Drawn glass, which is now beginning to be more widely used, is without general curvature, but has wide though slight channellings, which are visible by highly oblique light. In any case, the drying of the gelatine coating causes a bending of the glass of which the emulsionized side becomes concave.

[2] It is almost impossible to re-coat glass from old photographic negatives. Glass is not, as is commonly supposed, an inert material. Under many influences (light, atmospheric action, chemical treatment, etc.) it is susceptible to many changes, of which the most curious is one shown frequently by photographic plates. After stripping off the old emulsion and cleaning with great care, even to the extent of using concentrated and boiling nitric acid and alkalis, some plates will give a more or less complete rendering of the original image when the glass is silvered or when it is coated with fresh emulsion. (In the latter case, development of the fresh emulsion is necessary.) It may be supposed that the presence of ultra-microscopic particles, probably of metallic silver in solid solution in the glass, are the cause of this phenomenon.

[3] The glazier's diamond should be used by drawing it towards the operator, the side marked with an indented or other mark being turned towards the left and pressed against the ruler. A correctly mounted diamond must be held vertically during the cut. A diamond which has been improperly used may sometimes cut better if inclined a little backwards or forwards. The pressure of the diamond on the glass must be very light, and its motion must be comparatively

229. Flexible Supports. Celluloid is still the best flexible support for films. For its manufacture in thin transparent sheets (H. Goodwin, 1887; H. M. Reichenbach, 1889), collodion, of a consistency approximating to that of honey, is prepared in mixing tanks by dissolving nitro-cellulose and camphor (natural or artificial), in a mixture of methyl alcohol with the addition of another less volatile solvent such as amyl acetate. The highly-viscous collodion is passed through a filter press and on to the coating machines. The evaporation of the more volatile solvent[1] leaves a very compact solution in the less volatile one, which results in a homogeneous, non-porous, and transparent film which is actually a solid solution of nitro-cellulose in camphor.

The first flexible film was coated on to a plate glass table, about 50 ft. long, by a moving hopper. The collodion was dried and the emulsion was then coated and dried before the complete film was stripped from the plate glass. Film base, as it is called, is now made by a continuous process. The machine consists of a slowly-revolving large cylindrical drum with a highly-polished nickel surface. A layer of collodion overflows from a trough on to the drum, and is dried by a current of warm air. Before the revolution of the drum is completed the film is stripped off and carried by an endless band to the spooling machine. In some plants the cylindrical drum is replaced by an endless band of polished aluminium or nickel.

The most serious objection to celluloid[2] is its inflammability, particularly as it is very difficult, if not impossible, to control a celluloid fire, in which combustion can continue in absence of air. Attempts have long been made to replace it by a less inflammable substitute. The best results have been obtained with cellulose acetate; unfortunately, no compound will play the part of plasticiser for this compound as camphor does for nitro-cellulose. Acetate film base, in proportion as it loses its solvents by evaporation, loses some of its original mechanical properties, particularly its flexibility.

Whatever be the base employed, it must, before coating with emulsion, be coated on the side which is to receive the emulsion with a substratum[1] designed to secure adherence of the gelatine to the support during the various manipulations. This generally consists of gelatine dissolved in a solvent of the base, e.g. acetic acid.

For coating the emulsion, the base passes round a large cylindrical drum, cooled internally to allow the gelatine to set; a kind of tank formed by silver rollers, rolling by pressure against the film, is kept full of emulsion, which adheres to the film in a quantity determined by the temperature of the emulsion and the speed of the machine. The film, covered with wet emulsion, is hung in festoons from rods, distributed in a continuous manner on an overhead track, and thus travels a sufficiently long distance in the drying room, which is traversed by a current of warm air. The dry film is wound on to reels containing about 400 ft., and, after examination, is passed to the automatic cutting-up machines.

230. Papers. The properties required of papers which are to be used as supports for emulsions vary according to the use to which the (paper) negative will be put. Paper negatives may be used for printing by transmitted light, for direct reading, as in the case of self-recording instruments, or for reproduction only by reflected light, e.g. in the primitive cameras used by itinerant photographers and in some semi-automatic "while-you-wait" portrait cabinets introduced in 1928.[2]

In the first case the paper should be homogeneous in structure, to avoid, as far as possible, the structure appearing on the prints made from

slow (about 1½ in. per second). A very light scratching sound should be produced, and the scratch should be almost imperceptible. A white line in the trail of the diamond is a sign that the glass has not been cut in those places. If the pressure has been excessive the glass seems to be cut to a certain depth. In order to separate the pieces, the plate is held horizontally, gelatine film underneath, and bent as if to bring the gelatine surfaces together. After the glass has parted, the bending is done in the opposite direction, so as to part the gelatine. The cutting of glass sometimes gives rise to a luminous phenomenon which is slight, but suffices to fog a very narrow strip on either side of the cut (G. Labussiére, 1927).

[1] The volatile solvents are recovered as they evaporate and are used again.

[2] Celluloid releases nitrous acid and nitrogen peroxide, doing this rapidly in light and slowly in darkness, and in quantity all the greater as the temperature is higher. These bodies, to which is often due the yellow tint of celluloid of old manufacture, have a very marked action on sensitivity and on the latent image, especially in the case of ciné film, rolled up on themselves in tight coils without any other material interposed.

[1] The coating of a substratum is sometimes replaced by a superficial saponification of the cellulose ester regenerating cellulose to which the emulsion can adhere directly.

[2] Attempts have been made to induce amateurs to use negative paper in rolls interchangeable with roll-film, these images being copied by means of an episcopic projector (§ 799).

it ; to avoid too long a time being taken in the printing of each print, a thin unloaded paper is chosen, having sufficient mechanical strength, particularly in the large sizes, not to tear under

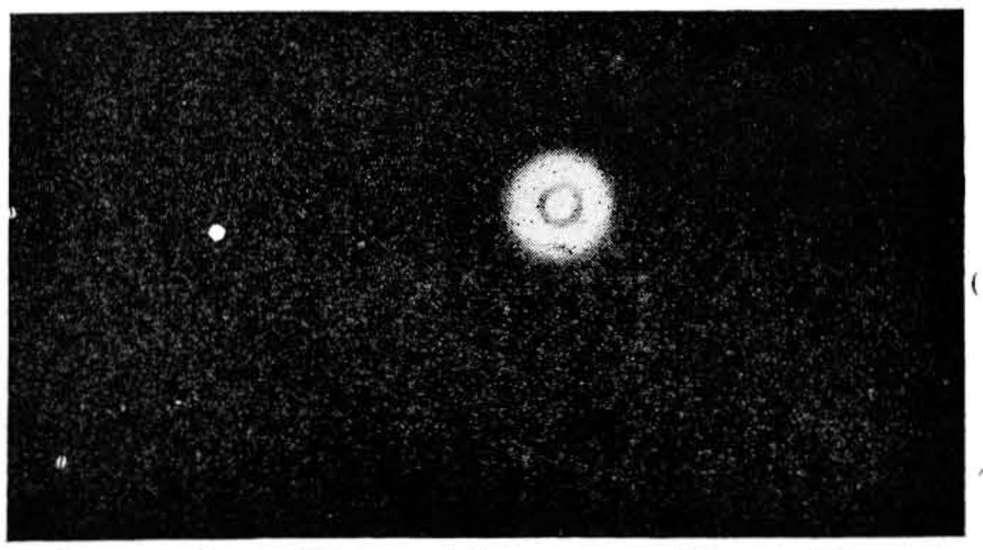

FIG. 148. A POINT (*a*) AND ITS HALO (*b*) AS OBTAINED ON A GLASS PLATE

the stress of the weight of the water absorbed by the paper and by the gelatine. As the emulsion is coated directly on to the substance of the paper without any intermediate layer, the material of the paper should be quite free from all impurities capable of affecting the emulsion or the image in the course of development. Metallic dust should be rigidly excluded.

In the second case, the emulsion is separated from the paper "raw base," as it is called, by a semi-opaque coating made by spreading, with brushes, a mixture of pure barium sulphate suspended in a small quantity of gelatine solution ; after drying, the paper is calendered.[1] By virtue of this isolation[2] greater latitude may be exercised in the choice of paper, particularly as the perfect homogeneity demanded of a paper used as a transparency is not of importance ; in these circumstances either thin or thick (card substance) papers are used.[3]

[1] Papers for matt prints are coated with a layer in which the quantity of gelatine is less than it is in the case of glossy prints, and, further, calendering is omitted.

[2] The protection conferred on paper by the *baryta coating* applies only to development papers ; the print-out papers (Chap. XXXVII), which contain an excess of soluble silver salts, are always coated on to paper of excellent quality. Certain papers used for positives direct by reversal (as in automatic machines) are rendered impermeable with celluloid so as to reduce the penetration of the baths and thus the times of washing.

[3] For the manufacture of papers with transferable sensitive layers (stripping papers), the paper is first coated with a thin layer of a fatty substance or soap insoluble in water, which is covered after drying with a layer of hardened gelatine or collodion (which latter forms the actual support of the image after the paper has been detached), and finally with emulsion. The paper is not stripped until the various treatments (including drying) have been carried out, so as to give to the whole a mechanical resistance sufficient for the successive operations.

In either case resin sizing must be protected against the action of alkaline baths, used for many operations, by adding a colloid such as gelatine or casein to the substance of the paper.

To coat the emulsion the paper passes under an ebonite cylinder, adjusted either to a trough containing emulsion kept at a constant level, or to a second cylinder half immersed in the emulsion. It then passes round part of a cooled drum and finally is hung in festoons for drying, in the same manner as that already described for films.

231. Halation. If an attempt is made to register an isolated luminous point on a photographic plate, or, if a plate is exposed to light under an opaque screen pierced by a small hole, the image of the luminous point will be found to be surrounded by an aureole, which is limited internally by a sharply defined circle, while externally it fades gradually into the background. This aureole is termed a *halo*, and effects of this

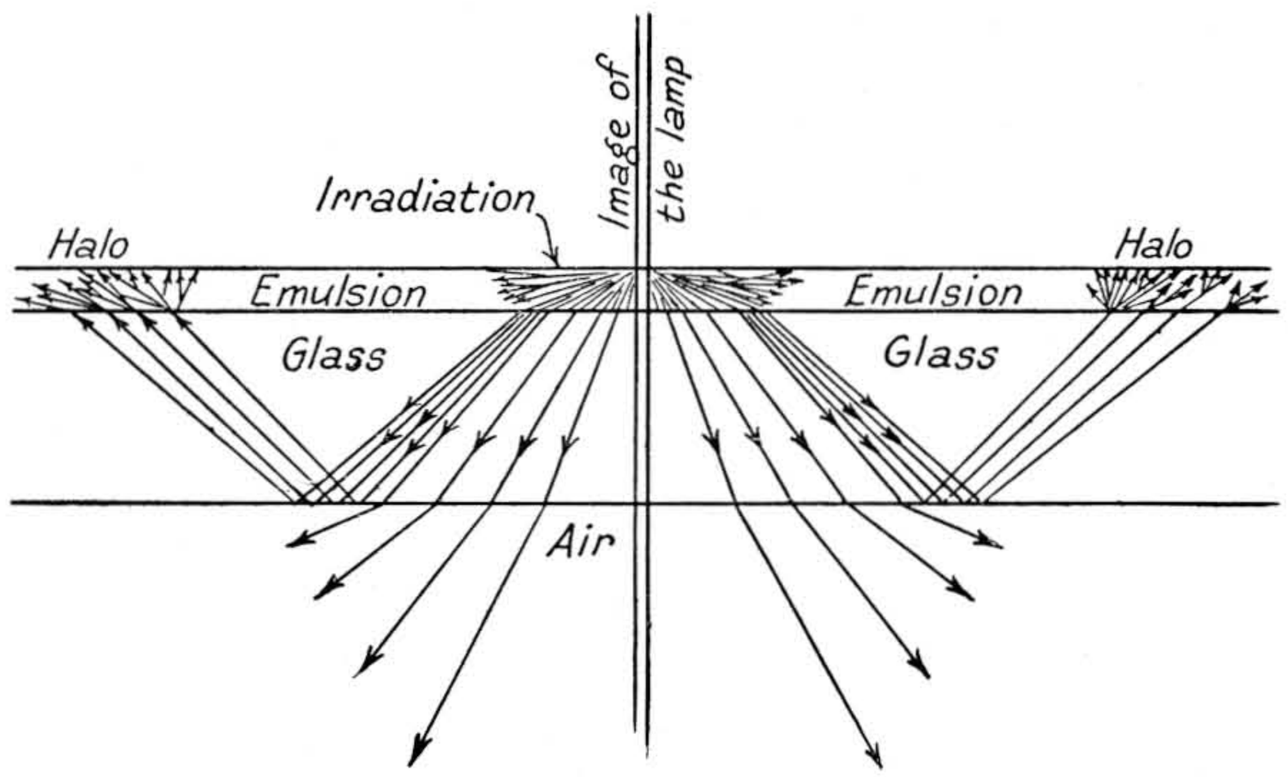

FIG. 149. MECHANISM OF HALATION

kind are comprised in the term *halation*. In Fig. 148, *a* represents a luminous point registered without halo, and *b* the halo obtained on an ordinary plate having a thickness of $\frac{1}{16}$th inch (each part of the illustration is a facsimile of the original negative).

The formation of a halo is illustrated in Fig. 149, which represents a magnified section of an emulsion coated on to a transparent support, which we will suppose for the moment to be glass. Owing to the turbidity of the emulsion, each

strongly illuminated point of the coating (e.g. the point receiving the image from the lamp), will itself radiate light in all directions. A fraction of the incident light is diffused from the face of the sensitive coating, and is absorbed by the black surfaces of the camera. Those of the rays which are diffused in directions almost parallel to the surface of the emulsion cause *irradiation* (§ 205), viz. a spreading of the image on to neighbouring portions, which we have seen to be negligible in ordinary photographic work.

The luminous rays diffused towards the back traverse the support and reach the back surface of the latter. Those of them which are least inclined pass through the surface into the air, and are absorbed by the black surface of the negative holder ; the rays that reach the back surface of the glass at an angle equal to or greater than 41° (the limiting angle for glass of mean refractive index 1·5) cannot emerge, and are totally reflected, thus forming the halo round the true image.[1]

The dimensions of the halo depend entirely on the thickness of the support and its refractive index. While it is practically negligible with thin film as long as the image is not appreciably magnified,[2] it becomes a disturbing factor in photography on film in miniature sizes and in cinematography, where there is considerable magnification. The intensity of the halo depends on the turbidity, the thickness, and the colour of the emulsion, as well as on the method of development. A thick or a yellow emulsion gives less halo than a thin or uncoloured one. Finally, the halo increases in relative intensity with increase in exposure.

Contrary to what has sometimes been stated, halation occurs with at least equal intensity on plates or on film exposed to light by their dorsal side.

232. The halo does not exhibit the geometric form which we have considered, except in the very rare cases in which separate bare lights appear against a dark background, as in the case of the photography of roads in towns at night, where, to obtain detail, there is, perforce, considerable over-exposure of the light-sources. In the case of a highly illuminated surface included in the field, the sum of the individual halos of each point of this surface causes its image to overlap the images of adjoining darker bodies. It is in this way that the image of the window, in the photograph of an interior, is spread out and distorted, the rectangle becoming curved and the image of the cross-bars disappearing more or less completely. In landscape photography the image of the sky shades off into that of the ground and of the trees or buildings which appear in outline against the sky, the slender branches of trees disappearing more or less completely. In the copying of a pen-and-ink drawing or letterpress, the image of the white paper encroaches more or less on to the images of the lines, and can, in certain cases, completely obliterate the finer details.[1]

Even when the halo does not show as an alteration of the shape of the image, it appears as a fog, which is in addition to the fog due to reflection of light in the lenses (§ 57).

233. Prevention of Halation. The only effective preventives[2] are—

(*a*) The application to the back of the glass of an absorbent layer (Marlow, 1861), in optical contact with the support,[3] having a refractive index at least as great as that of the glass (Carey-Lea, 1865; Cornu, 1890).

(*b*) The interposition of a light-absorbent coating[4] between the emulsion and the support.

[1] The diameter of the circle of the halo is, for glass of a refractive index 1·5, 3·58 times the thickness of the glass.

[2] While halation is less broad on films than on glass plates it forms much closer to the illuminated point of the emulsion and with a greater intensity, so that it reduces to a greater degree the resolving power, which is not much influenced by halation in the case of plates. Halation is often more intense with red light than with blue light, hence the advantage of absorbing chiefly red light in the means employed to protect panchromatic emulsions against halation.

[1] The mistake is sometimes made of attributing to halation (defined as above) the effect caused by dirty lenses, particularly in the absence of an effective hood, and, in the case of isolated luminous points, the diffraction effects due to the iris diaphragm ; in the latter case the image resembles a star with as many rays as the diaphragm has leaves (or double this number if it is odd).

[2] Halation seems reduced by very short development, but no addition to the developer can avoid or eliminate halation. It is clear that a developer cannot behave differently towards parts of the plate that have received, after the light has travelled by different paths, equal excitations.

[3] For ciné film, use is sometimes made of a support permanently tinted a grey of such intensity that, crossed twice under a very oblique incidence, it reduces sufficiently the halation without slowing down printing excessively, as it is then crossed once only by the light, and that under an incidence very close to the normal.

[4] A disadvantage common to all anti-halation substrata is the increase in the total thickness of the gelatine which retards exchanges within the gelatine in the course of the various treatments and washing and also retards drying.

This material may be either an opaque salt or a dye. It is eliminated during the course of development or fixation, or by special treatment.[1]

In the case of plates the anti-halation coating is usually in the form of a layer intermediate between the glass support and the emulsion, for a coat on the back runs the risk of being scratched when the plates are placed in the sheaths or dark-slides. In films it is generally combined with the coating that most films have on the back, this coat being sometimes covered with a very thin coating of wax to facilitate sliding.

A very ingenious method for the measurement of the anti-halation quality of a sensitive material (ratio of the quantities of light giving rise respectively to halation and the first trace of a developable image) has been devised by R. Mauge (1926)[2].

234. One of the first methods employed to protect photographic plates against halation had the further advantage that it also protected them against over-exposure and reversal by solarization (J. T. Sandell, 1892). The plate is successively coated with two or more emulsions of increasing sensitivity (§ 203).

235. Another process is that suggested in 1891 by A. and L. Lumière, and applied in 1892 by Magersted (*Isolar* plates). Before being coated with emulsion the support is coated with collodion or hardened gelatine coloured red with dyes which do not diffuse into the emulsion and have no injurious effect on it, and which will also, as far as possible, be decolorized by the acid fixing bath. For this purpose rosolic acid and its salts, aurine, coralline, and congo red, have been used. Red dyes are used for ordinary and orthochromatic emulsions; dark brown or black dyes for panchromatic ones.

H. Oakley proposed, in 1895, to coat the glass with a solution of gelatine and, after drying, to treat the gelatine with permanganate to form the brown hydrated manganese dioxide. This would be eliminated, when fixing, by the sodium bisulphite usually present in the fixing solution. Anti-halation plates have since been prepared by coating with an emulsion of colloidal hydrated manganese dioxide in gelatine, which gives a transparent yellow-brown substratum.[1]

Such a substratum does not interfere at all with the control of development by examination by transmitted light, when the operations are carried out in red light. At the most it interferes with the examination of the image by viewing the back of the plate, but we do not regard this as a real drawback.

236. Many English plates, especially those of the panchromatic kind, are protected by a coating of lamp-black in dextrine or caramel, applied to the back of the plate after the emulsion is coated (*backed plates*). Such a coating should not be too smooth, which would result in confusion between the two faces of the plate when the slides are filled in darkness, nor should it be friable,[2] for detached particles depositing on the emulsion would cause pinholes, worse in their effect than halation. It should not become tacky, as it would then adhere to the dark slide, and it must be quite soluble in water, or at any rate must soften in water, so that it may be easily removed with a sponge in the early stages of development.[3]

We also mention the use on plates and films of a dorsal anti-halation coating consisting of a

[1] With some panchromatic films with a bluish or greenish anti-halation layer decolorized by the alkali of the developer, the use of an excessively acid fixing bath or any subsequent treatment in an acid bath may cause the re-appearance, uniformly or in irregular patches, of the original colour. This may be removed again by an alkaline bath (5 per cent solution of sodium carbonate); the effect of an ammoniacal bath does not always persist after the ammonia has evaporated.

[2] The plate or film to be tested is exposed under a neutral graduated wedge (densities ranging from 0 to about 7 over a length of about 5 in.) with interposition of a thin sheet of black paper in which is a slit about 1 mm. width, placed at right angles to the lines of equal opacity of the wedge. Exposure is adjusted so as to cause reversal of the image in the parts of the screen of least density. After development, it is noticed that, beyond a certain exposure, the image of the slit is, owing to halation, bordered by two bands, of increasing density and width, which, owing to irradiation, soon merge into the image proper and spread in the form of a club. The logarithm of the anti-halation quality is the product of the constant of the wedge (variation of density per unit of length) and the distance between the threshold point of the image and that of the halo.

[1] Pyro and pyrocatechin developers very rapidly become exhausted when used for the development of these plates, their oxidation by air being catalyzed by the traces of dissolved manganous salts (H. Dürr, 1930).

[2] These backed plates thus coated cannot, as a rule, be loaded into the sheaths of the small changing boxes, which accommodate thin plates only. In using sheaths which are for thicker plates it is often of advantage to introduce, at the same time as the backed plate, a piece of thin cardboard with rounded corners to avoid any scratching of the coating by the edge of the plate holder.

[3] A good method of removing the backing from small plates consists in placing a small piece of well-soaked thick felt (about 1 in.) in a large dish containing a small amount of water. The back of the plate, held by its edges, is rubbed against the felt until it is noticed that the glass is sliding readily on the felt.

very thin layer of varnish (shellac or cellulose derivatives soluble in water) deeply stained by dyes which are not readily soluble in water, but which are decolorized in the developer which also dissolves the varnish.

The user may himself coat any plates which he cannot obtain ready backed. The following method of working (A. Helain, 1901) gives excellent results, the addition of the ammonium chloride to the dextrine ensuring perfect adhesion of very thin layers of the backing—

To prepare the backing—

Lamp-black (refined) . .	½ oz. (10 to 12 grm.)
Yellow dextrine . . .	4 oz. (100 grm.)
Ammonium chloride . .	¼ oz. (6 grm.)
Water	4 oz. (90 to 100 c.c.)

The lamp-black is moistened with a little denatured alcohol; the dextrine is then added, and then the water in which the ammonium chloride has previously been dissolved. The mixture is stirred with a spatula until even, and is not used until it has stood for 24 hours; it is then again stirred. The quantities given are sufficient for from 21 to 27 sq. ft. (200 to 250 sq. decimetres). Coating is best carried out with a stiff flat paint brush (a very thin, wide brush, rectangular in shape), of such a size that one stroke is sufficient to cover a plate. Practice in daylight on plain glass[1] is useful. It is well to coat the plates in pairs. For this purpose the plates are held, emulsion sides in contact, either in the hand or in a screwed polishing clamp. The coating should be very thin, but no portion of the glass should be left bare.[2] The coated plates are left to dry in a cupboard in the dark-room, or in a light-tight cupboard (approximate time, 3 hours).

237. A French brand of plates has, for a long time, been made with a black anti-halation backing film. This film, which contained gelatine, glycerine, ox-gall, and a black pigment, adhered perfectly to the glass until the plate was placed in any solution, when it was readily stripped off in one piece. (L. Lesueur, 1907.)

A similar result may be obtained by the user, at least as far as plates insensitive to red are concerned, by coating or brushing on to the backs of the plates collodion (P. and P. Henry, 1890) or celluloid varnish coloured with chrysoidine and safranine or with other dyes soluble in collodion solvents, or even with a little bitumen varnish.

238. Reference may finally be made to anti-halation backing sheets, made by coating ordinary or mounting paper with a mixture of glycerine, gelatine, and fine black pigment. These are applied to the backs of the plates by a squeegee or a rubber roller, and may be removed, for subsequent use, by stripping after the exposure has been made. These backing sheets may also be prepared by coating waste photographic paper with glycerine. Prior to this treatment the paper is darkened by exposure to a uniform source of light, and by development if necessary, and is then washed thoroughly.

Such backing sheets may be used again and again for an indefinite number of times, if kept in contact with parchment paper when not in use. If after repeated usage the gelatine becomes less sticky, a little glycerine is applied and the excess blotted off. Of late years photographers have preferred to buy plates ready backed.

239. Photographic Plates. The sheets of glass used in the manufacture of photographic plates[1] are divided, according to thickness, into three classes, viz—

Extra thin glass . .	$\frac{3}{100}$ to $\frac{4}{100}$ in.
Thin glass . . .	$\frac{4}{100}$ to $\frac{5}{100}$ in.
Ordinary glass . .	Above $\frac{5}{100}$ in.

As the *lower* limit for the internal dimensions of negative holders and plate carriers is the same as the nominal dimensions of the glass (with a tolerance of 1 per cent *at the most*) the nominal dimensions may be considered as the *maximum* dimensions of the sensitive plates. The cutting tolerances, at the most equal to 1 per cent, can be allowed only within the nominal dimensions.[2] In order that the plates may be effectively held in the plate holder, the dimensions of the image (measured between grooves or angle blocks) must be 5 per cent less than nominal.

Photographic plates are usually sold in boxes

[1] The plate on the glass side should give the appearance of a uniformly brilliant mirror.

[2] The backing may also contain soluble dyes, one of which may be a desensitizer.

[1] The coated side of a plate is generally slightly concave (§ 228). In practice no serious deformation of the image results; for very accurate work involving measurements (photo-topography and astronomy, for example) the emulsion is sometimes coated on to very thick patent glass.

[2] For lengths less than 8 in. a cutting tolerance of from six to eight hundredths of an inch is allowed. In practice an attempt is made to maintain a difference of less than $\frac{1}{20}$ in. between the nominal and the real dimensions.

of a dozen. Sizes from whole plate ($8\frac{1}{2} \times 6\frac{1}{2}$ in.) upwards are supplied in boxes of six. Finally, very small or thin plates are supplied, when required, in packets of eighteen, which is the normal capacity of certain types of changing box. In the interior of the boxes[1] the plates are packed face to face[2] in groups of 2, 4, or 6, wrapped in red or black paper, and the various packets are themselves wrapped in black paper.

240. In addition to trade particulars (trade mark, type of plate, etc.), the label on the box always has on it the *emulsion batch number*, so that the maker, in case of claim[3] (§ 430), can refer to the works register to find full particulars of the emulsion in question, together with the results of the tests made of the batch. The batch number is, moreover, of much greater value to the user than is generally believed. Two successive batches of the same formula cannot be absolutely identical in spite of all the care which is exercised, and a change in number indicates a variation in one or more of the characteristic properties of the material (slight variation in sensitivity and, for panchromatic emulsions, variations in the relation of sensitivity to the different colours; variation in speed of development, which may be considerable, and is the chief variant from a practical point of view). Photographic plates maintain all their qualities for a period of time much greater than a year, and it is advisable, when the quantity required can be estimated, to take a sufficiently large stock of plates with the same emulsion number to last for from three to six months. In this way one can be sure that all the plates used will behave similarly.

241. Photographic Film. Films are supplied in long strips for use in hand cameras for amateurs (§ 183), in automatic cameras for aerial photography (in lengths ranging from 100 exposures of $7 \times 9\frac{1}{2}$ in., up to 500 exposures of 7×5 in.), and for cinematography (Chapter L). Films are also supplied cut to various sizes, either in the form of film packs or in boxes of 12 or 24, to be used in place of plates for ordinary photography or for radiography. Roll films and the films for film packs which are coated on celluloid $\frac{3}{1000}$ in. in thickness, and cut films[1] which are coated on celluloid $\frac{1}{100}$ in. in thickness, are all coated on the non-emulsified side with a layer of plain gelatine (about 0·25 grm. per square decimetre), to counterbalance the curling tendency of the emulsion; without this provision the films would tend to curl up during handling,[2] owing to the swelling of the gelatine in the solutions.

Films, and particularly those coated on very thin supports, allow prints to be taken either direct or reversed as regards right and left. This is of great service in the case of pigment processes (carbon, transfer in greasy ink, etc.), which usually give reversed prints.

[1] French manufacturers generally use boxes with half-thickness fitting-on lids (the box is sometimes opened by pulling a thread, which is sunk into the joint). English makers always use lids which completely enclose the box. Owing to the considerable amount of looseness that obtains, it is advisable to slip the English boxes (when opened) into their stout paper wrappings; these should be opened only at one end. The label is as a rule placed on these wrappings, and should therefore be preserved until all the plates have been used.

[2] In the case of some English makes, the plates are not completely separated; the glass only is cut, and the emulsion of two opposite plates forms a hinge. The plates may be separated by carefully bending them backwards. The sensitive coatings, which are face-to-face, are sometimes separated by thin strips of blotting paper placed in the middle of the short sides of the plates. In spite of the care taken in the choice of these papers, fog is almost always caused by their contact, and so they are not generally employed.

[3] All claims relating to a supply of plates should give the emulsion batch number, and be accompanied by the reference slip (which has on it the number of the examiner), which will be found inside the box. We would urge the photographer to examine his conscience very carefully before blaming the maker for failures, which, in the vast majority of cases, have been shown to have resulted from some incorrect manipulation during the course of the operations.

[1] X-ray films are emulsion-coated on both sides. It is thus possible to use a much greater quantity of emulsion per unit area (about 0·60 grm. per sq. dm.) without increasing the time necessary for the various treatments, and also to use two *intensifying screens* (cardboard screens covered with a layer of fluorescent material, which becomes luminous when irradiated with X-rays, and thus reduces the time of exposure) one on each side of the film. It will be obvious that the use of two screens is possible only when the support of the sensitive material is very thin; if a thick support were used the two images would not register.

Mention may also be made of cinematograph film coated on both sides for two-colour projection and for stereoscopic anaglyphs. In these cases the emulsion is coloured yellow to stop light penetrating from one side and affecting the emulsion on the other.

[2] It may be mentioned that certain German films have not this gelatine backing; the support is of an acetate of cellulose which is very porous, and which swells in water almost as much as the gelatine.

The back of some films are coated with a translucent layer consisting of a suspension of raw starch in gelatine. The matt surface is due to superficial irregularities (the refraction indices of gelatine and starch being scarcely different). Transparency can therefore be restored if the back of such films is wetted with a liquid of the same index, if it is varnished, or cemented to glass by means of Canada balsam.

242. Strips of film of great length, for aerial photography or cinematography, which are developed either by continuous processing machinery or after having been wound on to a frame or drum, cannot be coated on the back with gelatine owing to the risk of adhesion or staining. The film, which is a very bad conductor of electricity, is liable to become electrically charged if rubbed against another bad conductor, and thus to cause discharges (visible in darkness) which are registered on the emulsion as dark marks of foliage pattern.[1] These *static markings* are produced only when the atmosphere is dry and particularly in cold weather, or when the camera is suddenly chilled. Many means have been suggested for increasing the conductivity of the non-emulsion surface of the film (*anti-static films*).

Emulsions coated on to films should be particularly resistant to abrasion (§ 199), as all rubbing of the film tends to cause phenomena similar to those caused on plates by sliding pressure and friction.

Films, even of the best quality, expand and contract according to circumstances. In the course of development and the subsequent treatment, films may increase in length by from 0·5 per cent (celluloid) to 1·5 per cent (cellulose acetate of good quality), while after drying they may exhibit a contraction of from 0·2 to 0·5 per cent. This shrinkage continues for a long time, and, in the case of an old film, may exceed 1·25 per cent (limit of tolerance for cinematograph apparatus); it is not uniform, and in some rare cases the *local variations* may amount to 100 per cent.[2] As a rule, film cannot be used when it is wished to make exact measurements from the images except by registering, at the same time as the image, a scale (e.g. a squared ruling of known size) against which to check the measurements. To reduce the local variations for this work, the film should be kept for some time in a moist atmosphere before commencing measuring.

243. The constituents of films are not, as is glass, inert materials, and the preservation for a long period of the qualities of the emulsion with which the film is coated is not as certain as it is in the case of plates. Chemical fog usually appears after some time, but in temperate climates it takes two years or even longer for this to acquire appreciable density. To safeguard themselves, manufacturers mark on the packets a date beyond which the film should not be used. The period thus indicated is much shorter than that which can probably be allowed, so as to provide for the risk of retailers keeping stocks under unsuitable conditions. Frequently films (not panchromatic or infra-red sensitized ones) have given excellent results after a period considerably in excess of the time limit allowed.

244. Negative Paper. Negative paper, which is deserving of notice owing to its comparatively low price compared with that of plates and films, is generally kept for work in large sizes (direct negatives, or negatives made by enlargement). For small sizes, the grain of the paper, which always appears to some extent when prints are made by contact, masks some of the finer details of the image. Printing and enlarging by episcopic projection (§ 799) can give good results, but the range of tones of the subject that can be differentiated in the final image is then much more limited than in contact printing.

In addition to negative paper proper, and the various stripping negative papers (forming supports for thin films which are stripped from the paper after processing), other papers are prepared for special purposes. These include papers for certain scientific and industrial recording apparatus, and papers for use with the simplified cameras for the copying of documents (in banks, for copying current accounts; in drawing-offices for the duplication of sketches, etc.). These negative copies are obtained "the right way round" by the use of a prism (§ 123) in front of the lens, and, as a rule, are kept as they are. The emulsion of these papers is considerably hardened, so that it can rapidly be dried by heat without risk of melting the gelatine.

245. Relative Merits of Plates and Films. We will consider here only the point of view of the amateur, with particular reference to the novice, leaving to the professional and other users the responsibility for deciding for themselves in each particular case to which type of sensitive material they will give preference.

To amateurs who restrict themselves to instantaneous photography in good weather, the roll film offers the advantages of daylight

[1] This electrification (negative charge of the bare side and slightly smaller positive charge of the emulsified side) may occur solely through the unrolling of a tightly coiled spool. The charges may neutralize each other through the support if the film is in equilibrium with an atmosphere of 60 per cent relative humidity. Anti-static coatings usually cause the back of the film to take a charge of the same sign as the emulsified front (V. B. Sease, 1928).

[2] The variations, general and local, are usually much less with thick films of cellulose acetate.

loading, lightness, and almost complete freedom from halation. On the other hand, for those who wish to improve their work it is a drawback that it is impossible, without almost acrobatic operations, to develop each negative as soon as it is taken. The novice who, during the day, has found two or three subjects worth photographing is always tempted to "finish the spool" by photographing anything in order not to be obliged to postpone the development of his negatives. Roll-film cameras are usually not fitted with any means of focussing the picture on a screen, and so it is at a disadvantage in doing all that is best for an exposure. Also, a long strip of film is much less easily handled than a plate.

It is possible to take advantage of the lightness and convenience of the daylight changing associated with films, by using a film pack with a plate camera, when need arises.

CHAPTER XIX

NON-ACTINIC LIGHTING : DARK-ROOM LAMPS AND SAFELIGHTS

246. General Principles. The choice of illumination to be used when handling sensitive material, either during manufacture or during the various operations prior to and including fixation, must be guided on the one hand by the distribution of the spectral sensitivity of the emulsion under consideration, and on the other by the sensitivity of the eye to various colours.

It may be laid down that there is no really *non-actinic illumination* in the true sense of the word ; that is to say, that there is no light, whatever may be its spectral distribution and however weak in intensity it may be, which will not fog a photographic emulsion if allowed to act for long enough.

It will thus be plain that in choosing a light for a dark-room we have to work out a compromise between somewhat incompatible conditions. We have to arrange, at least for a part of the time, for a light sufficient for the effective control of the operations being carried out, without at the same time appreciably fogging the sensitive material during the normal time required for the necessary manipulations.

To give shape to these ideas, suppose, to begin with, that we have to handle a panchromatic emulsion equally sensitive to all the colours of the spectrum.[1] Three filters, coloured respectively blue-violet, green, and red, each transmitting a third of the range of the visible spectrum and in the same proportions, could be used indifferently as filters for the dark-room lamp if only the actinic values of the three lights thus transmitted were being considered, in that they would each cause the same fog density if the emulsion were exposed to each for equal times. But, considering the physiological activities of the three lights thus transmitted, the blue-violet is a poor illuminator, the red little better, while the best visibility is obtained by the use of the green. This is in agreement with what has already been stated with regard to the spectral sensitivity of the human eye (§ 207, Fig. 141). Moreover, if it be supposed that, by suitable regulation of their respective intensities, two filters, coloured red and green, may be made, such that they have the same visual intensity, then it will be found that if the source of light common to both be reduced in intensity, the red will appear less intensely illuminated than the green (Purkinje[1] phenomenon). This is a further reason for preferring a green light for, by allowing the pupil time to accommodate itself to very feeble illumination,[2] it is possible to use a green filter which, transmitting only one-thousandth of the visual intensity transmitted by an ordinary ground-glass screen, at first sight appears to be absolutely opaque.

The same physiological considerations still apply even when the emulsion under consideration is not equally sensitive to the whole of the spectrum. For example, an emulsion sensitized

[1] It may be remarked that this hypothesis is in no way absurd ; it has been shown (A. von Hübl, 1920, that a collodio-bromide emulsion sensitized with pinachrome blue may have a sensitivity to green of 2·3 and to red of 4·8, the blue sensitiveness being represented by 1 ; if only the actinic properties of these three zones of the spectrum be considered, it will be clear that a non-actinic filter would be blue-violet in colour.

[1] The maximum brightness of the spectrum is, for strong illumination, in the yellow-green (about 5,800 Å.U). With decrease in intensity this maximum approaches the blue-green (5,300 Å.U). An example of the very great sensitivity of the eye to very feeble green light is given by dials, rendered luminous by radium, of which the emission (5,500 Å.U.) is very close to that corresponding to the maximum of visibility. Their intensity, about 0·002 to 0·004 candle power per square centimetre (H. Buisson, 1917), is such that they are readily visible, though only after one has remained in total darkness for some time.

[2] By means of the aperture of the iris and the sensitivity of the retina, the eye adapts itself automatically to illumination after an extraordinarily long interval ; while the opening and shutting of the iris is very rapid the adjustment of the retina is slow. From bright sunlight to darkness an hour may be required, while but ten minutes is necessary when passing from normal illumination to that of the photographic dark-room. The sensitivity increases more slowly than it decreases, and rapid alternations of light and darkness greatly reduce it. When leaving momentarily after adaptation it is well, in order to avoid the loss of time of a fresh adaptation, to put on black spectacles (density 2, approximately) with a fitting excluding all light except that passing the glasses. The presence in the field of view of a spot more strongly illuminated than the objects that are being looked at reduces the sensitivity of the eye and is a cause of fatigue. This is found in its worst form if the lamp, or its reflection from some bright object, is in the field of view when the dark-room is very dark (P. G. Nutting, 1916).

with pinachrome may be regarded as insensitive to the extreme red (beyond 6800° Å.U.) but a coloured filter transmitting only these radiations would appear so feebly luminous that a green filter, transmitting much less luminous energy but giving the same visibility, would give, as a rule, an equal degree of safety. For the same reason, although an orange filter usually transmits all the red, there is often less risk of fog with an orange light than with a red one, since, for the same visibility, less total luminous energy is necessary. The advantage of an orange light is particularly noticeable when working with very rapid emulsions which, as we have seen, are often slightly sensitive to the extreme red (§ 223, note), as the proportion of these feebly active radiations is much less than it would be in the case of a red light.

The source of light and filter combined must not transmit either ultra-violet,[1] which is very active on all sensitive emulsions, or near infra-red, which is known to act, after a fairly long exposure, on several emulsions.

247. Choice of Dark-room Illumination. In practice, the following lighting is used[2] for various types of sensitive material—

Slow positive silver chloride emulsions (for development) . . .	Yellow
Rapid positive silver bromide emulsions	Orange
Rapid negative emulsions, not orthochromatic[3]	Orange-red or yellow-green
Orthochromatic emulsions, sensitive to green	Ruby-red
Panchromatic emulsions . . .	Bluish-green of feeble intensity
Emulsions sensitive to infra-red, but not to green	Pure green

Not so very long ago the sensitivity of photographic plates was so small and so restricted to one part of the spectrum that it was always safe to use ruby-red glass (manufactured for windows or for railway signals) and, frequently, even fabric impregnated with lead chromate and varnished. But while the general and the chromatic sensitivity of photographic emulsions has constantly been improved, the manufacture of red glass has been more and more neglected,[1] the glass manufacturers having considered only the visual effect, and not the spectral transmission. Many red glasses, sometimes even the deepest, transmit a considerable proportion of violet which is usually not absorbed by the yellow-brown glass, sometimes superimposed on the red one as a precaution. The green glass of commerce transmits almost the whole of the spectrum and has merely a predominant transmission in the green. It is only very exceptionally that it is possible to find a green and a yellow glass which, when superimposed, gives a non-actinic filter which is satisfactory for the manipulation of ordinary emulsions.

The inability of glass makers to satisfy the needs of photographers has resulted in the manufacture of special filters for the illumination of photographic dark-rooms which are generally described as *safelights*, and are prepared either by dyeing papers[2] in solutions of dyes of suitable strength or by coating coloured gelatine. The actual safelight is made by the superposition of two or three similar or dissimilar elements.

Safelights applicable to each case have been worked out by determining each time the maximum general dark-room illumination which is compatible with safety, and not the amount of direct light which may be allowed to fall on to the sensitive material. The operator thus avoids the painful sensation of groping about in almost complete darkness.[3] With the traditional

[1] This condition is satisfied when the usual artificial illuminants are used, but it must be borne in mind if daylight is employed or electric lamps with metallic gases or vapours (neon, mercury, sodium, thallium, etc.).

[2] In choosing a light it should be remembered that red light increases the apparent contrast of images and induces one to curtail the development; where there is a choice of illumination, orange or green should be chosen.

[3] From the fact that a certain red and a certain green are complementary, inventors have attempted to get a colourless non-actinic light for ordinary plates by blending red and green lights, which separately are non-actinic. As it is possible to produce only a yellow in this manner, it is much simpler to use a plain yellow filter in all cases where the sensitivity of the emulsion permits.

[1] In place of the glass coloured throughout its mass with gold salts, it is more usual to meet in commerce with glass coloured with copper by coating a thin layer of red enamel on to the surface of ordinary glass. To cut this glass (the structure is readily seen by examining a section) the diamond should be applied to the plain side, never to the coloured side. Neglect of this precaution may result in damage both to the glass and to the diamond.

[2] Non-actinic papers should not be confused with coloured papers intended for the manufacture of artificial flowers or for packing material.

[3] It is interesting to note that, as a result of many clinical observations on workers in photographic plate and film factories who have worked for many years in darkness or in feebly actinic light, Drs. F. Heim and E. Aglasse-Lafont (1912) have concluded that *occupational anaemia*, caused by working in darkness, *does not exist*.

deep-red glass safelights, which limited the illuminated zone to a square foot or so in the immediate neighbourhood of the lamp, the dishes had to be brought into contact with the lamp itself, whereas a lamp fitted with a modern safelight may be placed some distance from the baths, and the dark-room will be well illuminated in its entirety without the sensitive material being more strongly illuminated than it would have been under the old conditions. Nevertheless, it is still well to cover the bath during the time when it is not necessary to watch the development.

The use of a desensitizer, either as a preliminary bath or in the developer itself, allows a

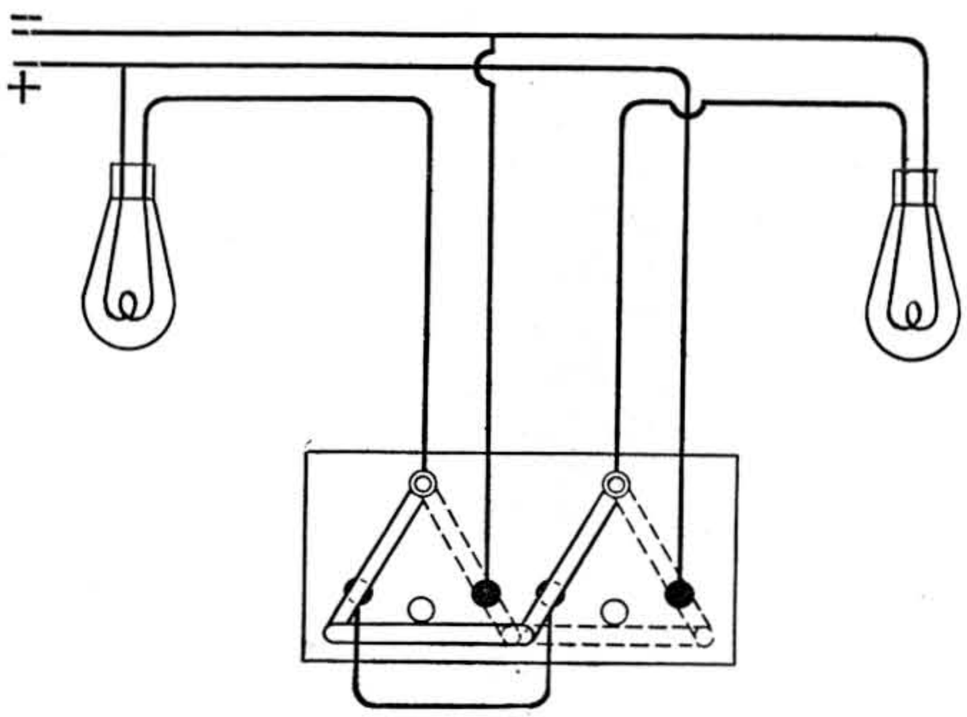

FIG. 150. WIRING FOR DARK-ROOM LAMPS

very bright light to be used from the moment the emulsion has been effectively desensitized, so that the remaining operations may be carried out in a yellow or white light without the slightest risk of fog whatever the original sensitivity of the materials in use.

To ensure good general illumination of the dark-room, the walls and ceiling should be light in colour; the diffused light from the walls cannot be more dangerous than the light which issues directly from the dark-room lamp.[1]

248. Light Sources. Daylight, owing to its continual fluctuation, is the least serviceable light source for dark-room illumination; it may, however, be used for general lighting of the dark-room, if it is possible to exclude it partially or wholly when desired by a shutter or blind.

In all rooms equipped for permanent use where illumination is restricted to combustible solids (candles), liquids (paraffin, petrol, oil), or gases (acetylene, incandescent gas mantles), it is well, when space permits, to place the source of illumination outside the dark-room, allowing the light to enter through a window. In front of this window grooves should be provided to take interchangeable frames fitted with safelights corresponding with the different photographic materials in use. With such an arrangement the products of combustion are kept from accumulating in the dark-room, vitiating the atmosphere and making it uncomfortably hot in warm weather. Also a greater choice of lighting appliances is possible. The burners usually provided in dark-room lamps are seldom well made. Finally, there is avoidance of the risk of white light leaking into the room, as it frequently does through the badly-constructed ventilation holes of dark-room lamps. Failing this arrangement of external lighting, the products of combustion should be allowed to escape by metal pipes.

As regards the simplest kinds of lamp, it should be borne in mind that a candle, when it is enclosed in a lamp, melts more quickly than it burns.[1] For this reason a stearine night-light in a glass saucer is to be preferred if no other illuminant is available. These night-lights can be renewed to any extent by using wax matches as wicks. The reservoir of a petrol (gasoline) lamp should never be inside the lantern, which should enclose only the flame.

Preference will obviously always be given to electric lamps supplied from the mains[2] or by a storage battery. In view of the fact that the higher the voltage is across the lamp the greater is the emission of the blue and violet radiations which have to be absorbed by the safelight, it is worth limiting these useless portions of the radiation by running the lamps at a voltage lower than normal. Thus, a lamp intended for 125 volts may be used on a supply with a voltage of 110 volts.[3]

[1] Since red light is so frequently used, red ink and pencils, which give marks totally illegible in red and faintly legible in yellow light, should not be used for labels, notes, or for any memoranda used in dark-rooms.

[1] The guttering of the candle can be prevented by using an infusible coating, forming a species of cup which retains the liquid stearine (dextrine mixed with a hot solution of magnesium sulphate).

[2] Failure in the domestic electric supply may be guarded against by having an emergency lighting outfit (e.g. Féry cells), thus avoiding being interrupted in the course of work. In emergency an electric pocket lamp may be converted into a dark-room lamp by fixing a safelight in front of the lens, which acts as a condenser for the light, or by replacing the ordinary lamp by a special lamp with a red bulb.

[3] *Fatal accidents* have occurred following contact of wet fingers with metal parts connected to one of the wires of a 110-volt circuit (faulty insulation), especially

To obtain full illumination in the dark-room, after desensitizing negative emulsions or when using positive emulsions, it is useful to be able to modify the amount of current used by the lamps. For this purpose the arrangement shown diagrammatically in Fig. 150 (Clerc, 1913) may be used. A double-pole switch is arranged to connect the lamps either in parallel (maximum light) or in series (minimum light of intensity, measured after the light has passed through the safelights, about 25 per cent of the maximum). Alternative arrangements involve the use of a resistance in the lamp circuit ; or, with alternating current, a special transformer, with tappings for two different voltages (e.g. 60 and 90 volts for a 110 volt lamp) [1] controlled by a switch, may be used.

Despite the considerable progress which has been made in electric lighting, most of the energy consumed is converted into heat, and so the ventilation of electric lamps is just as necessary as it is for other types of lamp. The life of an electric lamp is always shortened if the lamp is used at a higher temperature than would be attained if it were not enclosed.

Neon pilot lamps which emit a very feeble orange glow (about 1 candle-power) may be used with advantage in all cases where only a very faint light is required (e.g. for reading a dark-room watch or clock placed on the work bench, or for illuminating passages between several dark-rooms. Whenever these lamps are used on the work bench a yellow safelight should be employed to cut off the small proportion of violet rays emitted.

The reader should be cautioned against the use of lamps with red bulbs (red glass or glass covered with red varnish), which are more useful for decorative lighting at fêtes than for photographic purposes. The few lamps specially manufactured are very much higher priced than ordinary lamps, and the difference in price, after several replacements, amounts to more than the cost of a good dark-room lamp.

249. Dark-room Lamps. The chief quality demanded of a dark-room lamp is that it shall stop all light other than that which passes through the safelight. It must be sufficiently well ventilated not to cause damage through over-heating of the filters of paper or gelatine (charring, melting, etc.), which are obviously more susceptible to injury of this kind than the coloured glass which, at one time, was the only material used. In some lamps the safelights are separated from the lamp itself by a sheet of glass, and the two compartments thus formed are separately ventilated.

From every point of view work is considerably facilitated if the lamp gives only a diffused light. This may be achieved either by the safelight being itself a diffuser, or by arranging the source of light so that the light which falls on the safelight comes from the matt-white surface of the interior of the lamp, which can be regarded as a source of diffused light. [1]

Lastly, it is very desirable that the luminous surface of the lamp should not be visible to the operator in his normal working position. This may be achieved by using a hinged shutter or opaque screen, so that, when required, the negative can be examined by transmitted light [2] in the course of its development.

We will refrain from describing the innumerable types of dark-room lamp, more or less satisfactory in design and construction, which have been manufactured. A description of those at present available will be found in the dealers' catalogues. We will content ourselves with a mention of lamps with liquid filters. These consist generally of two concentric bowls of clear glass, between which is poured a solution of mineral salts or of dyes, the composition and concentration of which are chosen according to requirements. [3]

if the floor is damp (which is often the case in a dark-room), or the other hand is dipped in a liquid connected to earth. It is therefore necessary to see that all conductors are perfectly insulated, and to avoid as much as possible using flexible wires in dark-rooms, or at least to use them only sheathed in thick rubber. All danger can be avoided by supplying the dark-room with a 30-volt current from a transformer.

[1] It is useful to be able to switch on or off at least one of the lamps by either of two switches placed one at the door and one near the operator's usual position.

[1] In addition to the lamp which illuminates the work bench, it is useful to have one illuminating the ceiling. This gives a general indirect illumination, the value of which has already been emphasized for other purposes. The safelights for this lamp may pass more light than those for bench use. This method of illumination is the only one used in the emulsion-coating rooms of some factories.

[2] Mention may be made, for the sake of reference, of an arrangement which has frequently been commended, viz. a plate of glass, illuminated from beneath, on which a glass developing dish is placed. The negative can then be examined by transmitted light when necessary, without it being necessary to remove it from the dish.

[3] A lamp with a liquid filter can be improvised by placing a tubular electric lamp with a small cap in a test-glass with a foot which is suitably weighted, and the upper and lower parts of which are fitted with opaque masks. The test-glass is then stood in a jar containing the filter liquid. For instance, an effective

250. Testing of Safelights. The spectroscopic examination of safelights, which is frequently recommended and sometimes used as a guarantee of these goods, is entirely illusory. The harmful rays, and particularly the violet rays transmitted by many red glasses, when dispersed by the spectroscope, affect our eyes so little that they are often unnoticed even when the source of light is the sun or a strong electric arc. The only way in which a spectrographic examination can be of any use is when the eye is replaced by a photographic plate of the same kind as that for which the safelight is intended.[1] The only visual examination capable of giving any safe indication as to the quality of a safelight is that in which various filters transmitting only one portion of the spectrum (*monochromatic filters*) are superposed on to the safelight to be examined ; in these circumstances the combination should in no case appear to transmit rays which should be absorbed by the safelight.

The best, and, incidentally, the simplest, method of testing a safelight is to make a practical test under reasonable conditions. If it be remembered that the loading of a dark slide takes place partly in darkness and partly in indirect light, that a plate loses from 50 to 70 per cent of its sensitivity (quite apart from previous desensitizing) when it is immersed in a developer, and that the bath or dish in which development takes place can be covered during the greater part of the development, it will be readily understood that if the dry surface of a sensitive emulsion be exposed to the light from a safelight, placed 20 in. away, for a period of 30 seconds[2] without the emulsion becoming appreciably fogged (2 minutes if the safe-light tested is intended for use with positive emulsions), the safelight is a satisfactory one for the particular plate. To make the test, a plate (or film) is placed in a printing frame, and about a third of it is covered with black paper. A piece of cardboard, which at the start covers the whole of the sensitive surface, is moved every ten seconds, so that successive strips of the material are exposed to the light; these strips will thus receive exposures of 10, 20, 30, 40, etc. seconds respectively. After development, the plate is examined, and if the 30-second strip and the portion which has not been exposed at all do not appear to differ in density, then the safelight may be regarded as suitable for the material in question. If, on the other hand, fog appears on the 10- or 20-second strip, it is necessary either to change the lamp for a weaker one or to darken the safelight by adding one or more sheets of paper, coloured yellow, green, or red, as the case may be. If, however, the first appearance of fog on the test strips indicates that a much longer exposure than 30 seconds is safe, then it is possible to increase the strength of the lamp. In either case, a fresh test should be made after the alteration considered to be necessary has been carried out.

251. Preparation of Safelights. It is beyond the scope of this work to describe the commercial methods of manufacturing coloured screens, and we will content ourselves with indicating a method of preparation which may, on occasion, be used by the photographer.

Procure some parchmentized paper (or sulphurized paper) and immerse for a few minutes in one of the tinting solutions given below, heated to 120° F—

A. 4% solution of tartrazine. (Yellow.)
B. 1% solution of chrysoidine. (Orange.)
C. 1% solution of naphthol green. (Green.)
D. 2% solution of carmine blue or Patent Blue. (Greenish Blue.)
E. 1% solution of methyl violet. (Violet.)

According to circumstances, the safelight is made by using or combining the dyed sheets, as follows—

Slow development papers .	1 or 2 sheets of A (Yellow)
Bromide paper. . .	1 sheet of A and 1 of B (Orange)
Ordinary slow plates or films	2 sheets of A and 1 of D (Green)

filter for emulsions sensitive to infra-red, with a 25 watts lamp, is provided by a layer 70 mm. thick of a mixture of 9 volumes of a cold saturated solution of copper sulphate and 1 volume of a 5 per cent solution of potassium bichromate (F. Leiber, 1933).

[1] It has been suggested (H. Arens and J. Eggert, 1929) that the spectrograph should be illuminated through a filter so that the various radiations should have the same visual intensity in the spectrum obtained. A spectrogram on the emulsion tested indicates by its least dense areas what are the spectral areas to be used for illumination, and a second test with the safe-light under test interposed indicates if the active spectral areas have been cut out.

[2] We have seen a time of 30 minutes recommended for this test ! No safelight, unless completely opaque, could be accepted as a result of such a test. The conditions of the test must be very much more strict when testing safelights intended for use in the coating, cutting, and examining rooms of a works. It has been advocated (C. Emmermann, 1929) that samples on which sensitometric scales have been printed in identical conditions should be exposed for increasing times to the inactinic light. The time chosen as the maximum permissible is the longest of those that do not distort the density curve.

Ordinary or orthochromatic plates or films . .	1 sheet of A and 1 of E (Red) [1]
Panchromatic plates or films	2 sheets of A and 1 of C and 1 of D (Dark green)
Infra-red plates or films .	2 sheets of A and 1 of D (Green) with a Prussian blue filter added [2]

[1] At 10 in. from a 25 c.p. lamp of the vacuum type and slightly overrun, a rapid plate (dry) will not develop fog until after exposure for longer than 8 min.

[2] Dissolve 154 gr. (10 grm.) of gelatine and 71 gr. (4·56 grm.) of potassium ferrocyanide in 5 oz. 134 min. (150 c.c.) water and add slowly 31 gr. (2 grm.) of pure ferric chloride dissolved in $1\frac{3}{4}$ oz. 5 min. (50 c.c.) water, stirring vigorously, the two solutions being at 104° F. This mixture is coated at the rate of $\frac{1}{4}$ oz. 91 min. (12·5 c.c.) per 15·5 sq. in. (100 sq. cm.) (K. M. Kusminsky and A. N. Kusmenov, 1936).

Waste plates, which have been fixed (without having been developed), washed and dried, may be dyed in the same way. Safelights thus prepared are very transparent, and one or more sheets of coloured or translucent paper should be placed between the two sheets of glass unless the lamp is to be used for indirect lighting, or is so constructed that the light-source affords the lighting entirely by reflection from a matt white surface in the lamp.

CHAPTER XX

EQUIPMENT OF THE DARK-ROOM

252. The Amateur's Dark-room. There is no need of a specially equipped dark-room for the production of good photographs. Any room (preferably kitchen or bathroom containing a sink and running water) may be used *after dark* as a photographic "dark-room"[1] without alteration. If the room faces a lighted window or if there is a light outside (e.g. a street lamp), all that is necessary is to close the shutters or draw the curtains; failing this, some dark fabric must be hung so that it fits tightly over the window; any light that filters through the cracks will not matter as long as the sensitive films are not exposed directly to it.

The amateur who has sufficient leisure and opportunity to work during the daytime requires a non-actinic light, and can fit up, according to his resources, a dark-room similar to that of a professional photographer. Directions are given for this in §§ 254–261.

253. Public Dark-rooms. The public dark-room, found chiefly in hotels, is designed entirely for the changing of slides and changing boxes to the exclusion of all other operations (the dark-rooms of amateur photographic societies, in which the equipment is similar to that of a professional, obviously do not come in this category). The function of a public dark-room being thus limited, a cabin not much larger than a telephone box is quite sufficient (about $4\frac{1}{2} \times 4\frac{1}{2} \times 7$ ft.) The equipment consists only of a small table along one wall to a depth of about 18 in., and a waste-paper basket. A table standing about 3 ft. from the ground will be convenient, and a stool of appropriate height will enable one to work sitting down. The room must be perfectly light-tight, no ray of light being visible after remaining 5 minutes in total darkness. To ensure this, it is usually necessary to provide a rebate or seating for the door to the width of an inch or two, the seating thus formed being painted matt black. A catch on the inside permits the occupant to shut himself in. The inside is papered or painted a light yellow or orange colour. The red light must be placed so that it does not illuminate the table directly, only by light reflected from the walls. The best plan is to provide a small window in one of the walls about 15 × 20 in., fitted with non-actinic screens, the source of light being placed outside the room; this prevents the lamp being left on after use by mistake. A movable shutter, worked from the inside, shuts off the light completely when using panchromatic emulsions.

254. Construction of the Ideal Professional Dark-room. The first consideration is the health and safety of the worker.[1] Do not let the dark-room be so large as to lead to its subsequent conversion into a lumber-room.

Most solutions of salts, particularly the concentrated solutions of hypo used for fixing, cause disintegration of cement. The floor of the dark-room, at least in the working space, should preferably be paved (earthenware tiles, *not* cement, jointed with bitumen), asphalted, or covered with some impermeable composition. If the floor is of wood, it should be entirely covered with a rubber covering or linoleum, cemented down, or, at least, rendered impermeable by pouring hot paraffin wax over it, the excess of wax being scraped off before cooling (the coat of paraffin wax should be renewed from time to time).

The interior walls, and, if possible, the ceiling, should be covered with a washable paint, preferably matt (many water paints withstand water after complete drying) of a light colour—but not white, as it gets dirty so easily, and occasions reflections, which may cause trouble when the dark-room is used for enlarging. Yellow and orange are the most suitable. They remain light whatever illuminant is used (red or green). It is well to cover the wall at the back of the

[1] Care must, of course, be taken to avoid staining the floor, furniture, and wall hangings. They may be protected by linoleum, oil cloth, or American cloth. Work may also be done in a large dish, fitted to serve the purpose of a sink.

[1] In France, an order published in the *Journal Officiel* of 12th July, 1913, to which there have been other references, prescribes: The volume of air shall be at least 10 cubic metres per person employed in a laboratory. The closed rooms used for work are to be well ventilated and comfortably heated in winter. During intervals of work the air in the rooms is to be completely renewed. The floor is to be cleaned at least once a day either *before* or *after* work by washing with a damp cloth. The walls and ceiling are to be frequently cleaned.

sink with earthenware tiles or thin sheet lead to protect the wall from splashes.

If possible, the dark-room should have a window for ventilation when the room is not in use. The easiest way of excluding light is to replace the panes of glass by tin plate; or a blind may be fitted between two frames, forming a trap for the light; or a detachable shutter may be constructed by gluing opaque paper on cloth stretched on a framework, which, in turn, may be wedged in the window frame or secured by screws and bushes.

255. Passages. Where there is ample room, it is a great convenience to provide means for entering and leaving the dark-room without admitting light. One method is the "drum," as shown in Fig. 151, the vanes closing on one another for ventilation when the dark-room is not in use.[1] Another plan is a series of partitions represented in Fig. 152, the centre partition being preferably movable to admit large objects. If neither of these means are possible, one must be content with an ordinary door (Fig. 153) opening into an enclosure, covered with a large opaque black cloth, hanging in folds and arranged if possible against a frame which forms a species of rebate. Whatever the means adopted, the walls of the "passage" must be painted matt black to absorb as completely as possible any light that may reach them.

[1] "Drums" are not advisable unless the dark-room has an emergency exit freely accessible for use in case of danger.

Failing any of these devices, it should be borne in mind that it is much easier to render completely light-tight a sliding door than one of the ordinary pattern on hinges.

256. If entrances and exits cannot be made without admission of extraneous light to the dark-room, it is convenient to be able to pass slides containing exposed plates from the studio to the dark-room, or re-loaded slides from the dark-room to the studio, without having to admit white light to the dark-room. An arrangement as shown in Fig. 154 can be built in the partition for this purpose. It consists of a wooden box with a false bottom and two openings opposite each other; a flexible curtain of strips of wood mounted on cloth is arranged so that one opening cannot be uncovered until the other has been completely closed.

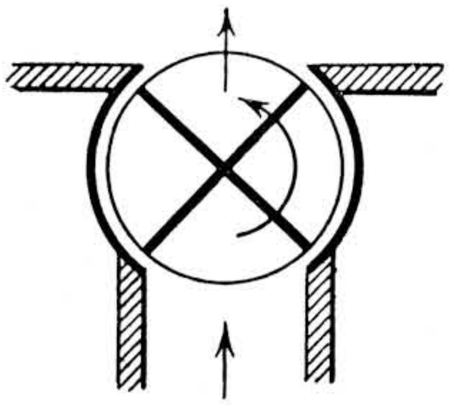

FIG. 151

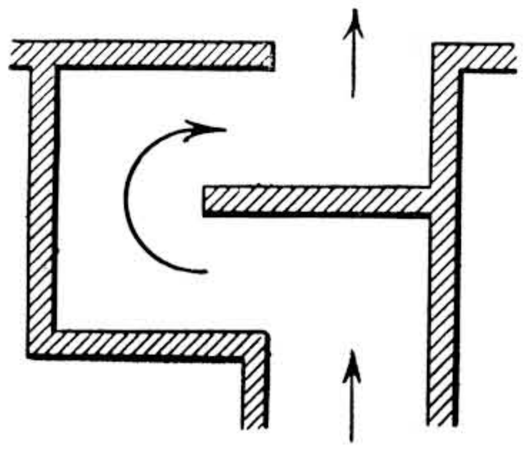

FIG. 152

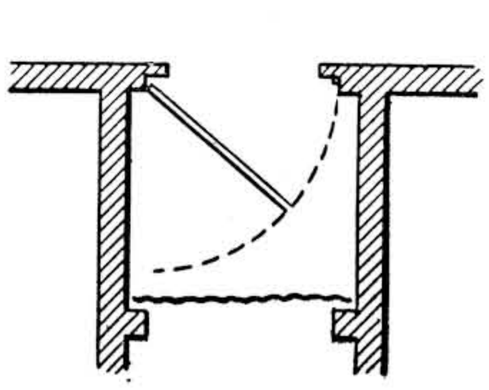

FIG. 153

TYPES OF ENTRANCES TO A DARK-ROOM

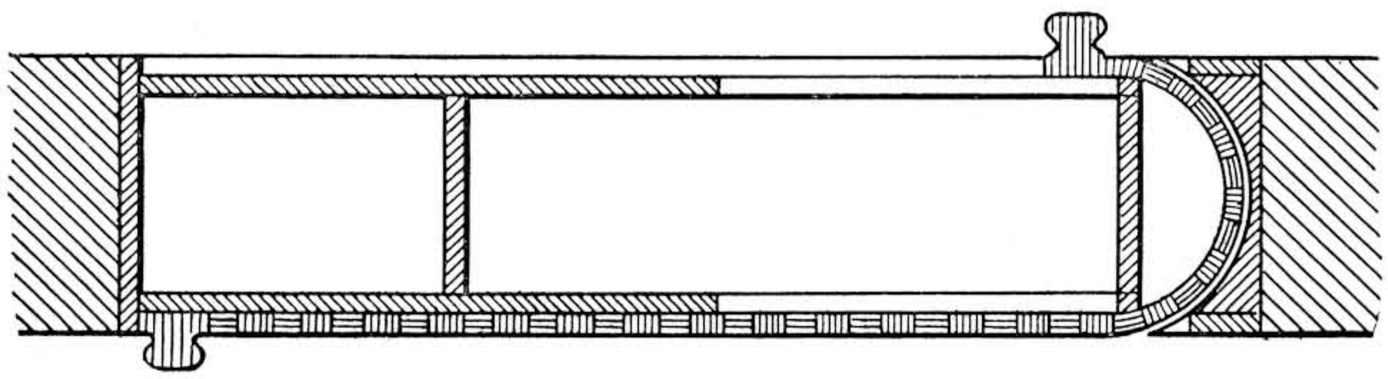

FIG. 154. BOX FOR LIGHT-TIGHT DELIVERY TO A DARK-ROOM

Another device for the same purpose is shown in Fig. 155. Within the thickness of a partition wall a kind of cupboard is arranged, closed on each side by a guillotine or sliding door. A cylindrical iron rod, sliding in grooves, forms a common bolt between the two doors, one of the latter being able to slide only after a peg in the bolt has been fitted into a hollow in the other door, which is thus locked. When one door is open the bolt cannot be disengaged from the other, since it is flush with the inside wall of the open door.

Use has been made for the same purpose of a drawer opening from either side of the partition,

and sliding in a sheath long enough to cover it entirely.

257. Ventilation. Except in the case of dark-rooms, having permanent entrances by "passages," the exclusion of all light obviously necessitates the closing of all the means of ventilation usually found in a room. It is therefore necessary to arrange a system of ventilation which does not allow the passage of light, by air-ways to another room, or preferably to the open air.

In either case, two systems are required, one

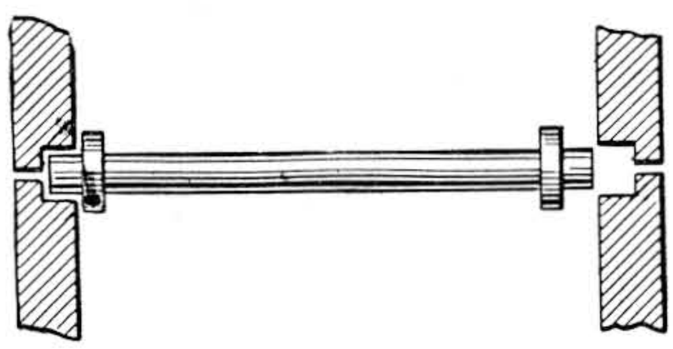

FIG. 155. BOLT FOR SELF-LOCKING DARK-ROOM DOOR

for the entrance of fresh air, and the other for the removal of the contaminated air, the former near the floor of the dark-room and the latter near the ceiling.

When the ventilation is taken from a corridor or from another room, the partition is provided with a wooden frame similar to that shown in section in Fig. 156. The passages are formed by thin sheets of wood or metal mounted in the frame. When the ventilation is taken from the open, the wall is fitted with hollow bricks (Fig. 157), the passage being made on the outside by a zinc baffle plate, and, on the inside, by a wooden frame with a wood or iron panel. In both cases all inside walls of the passages are painted matt black to avoid successive reflections of light.

Ventilation to the open may also be made by shafts or wide tubes of wood or sheet iron with knees, so as to provide exclusion of light.

258. Heating. The temperature of the baths used in photography considerably affects the speed of the reactions and the quality of the images. The use of time methods of working requires the temperature of the developer to remain practically constant from one operation to another, or at least during a single operation. It is useless to try to use a warm developer in a cold dark-room, or vice versa, except by employing a water-bath of large capacity.

The best way is to keep the temperature of the dark-room constant within narrow limits (about 65° F.). If central heating is not available, the flue of a stove in a neighbouring room may be arranged to pass through the dark-room. A closed combustion stove in the dark-room is a mistake, on account of the dust produced in charging and discharging. Failing other means, an electric heater may be used; unfortunately, it is a very expensive mode of heating.[1]

259. Sinks. It is best to conduct all operations with liquids in a large sink. This can be made, for example, of wood,[2] lined inside with lead (all joints must be welded, not made with tin solder) or slate. Cement sinks are to be avoided; they are cheap, but do not last long; earthenware sinks are usually too small. The bottom of the sink should always be on a slope, to allow all the water to flow away through the waste pipe (Fig. 158).

The sink is provided with a wooden rack from one end to the other, fitted with triangular rods, so that it makes very little contact with the

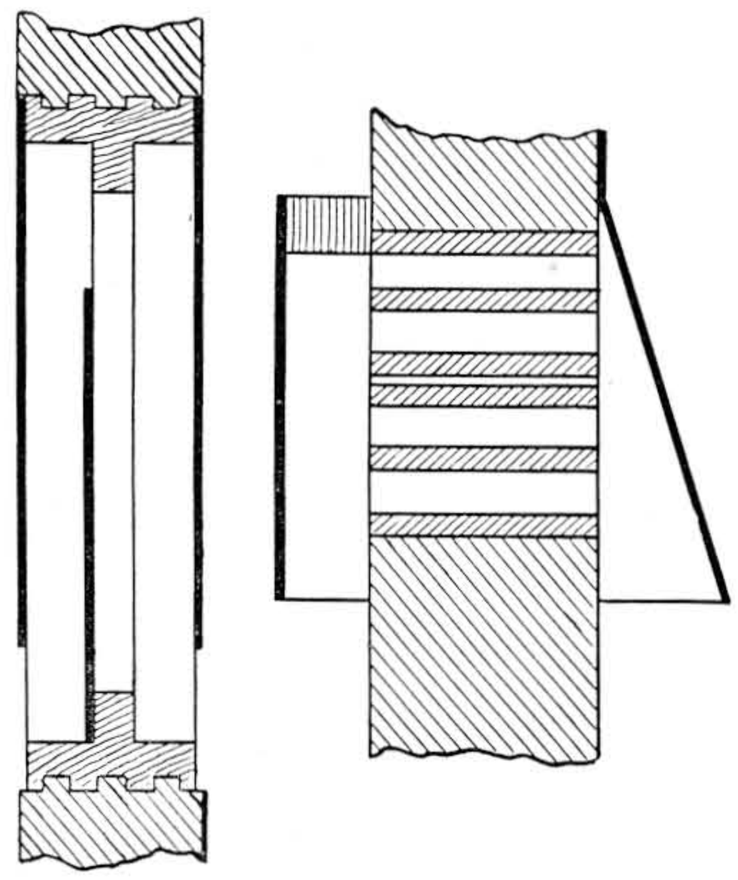

FIG. 156 FIG. 157

DARK-ROOM VENTILATORS

bottoms of dishes, and consequently does not wet them appreciably.

The internal dimensions of the sink should be such that it will hold side by side the dishes used in the various operations. The sink may

[1] Electric boiling tubes (of quartz) are very useful when one wishes to warm up rapidly a very cold bath to the temperature of the dark-room. They are heated internally by resistances, and are plunged into the liquid to be heated, and used as a stirrer.

[2] It is possible to use sinks of bare pine, the boards being pressed by bolts on to a jointing of thick tar in the grooves of the joints.

be extended on one side or the other by platforms where stock solutions can be mixed. The platforms should preferably be made of impermeable material, or be rendered impermeable, and should have grooves draining into the sink to prevent water collecting on them.

A bamboo rail running above and a little in front of the top of the sink provides something for the operator to lean on, and prevents his wetting his sleeves or clothes against the sides of the sink, which are always damp.

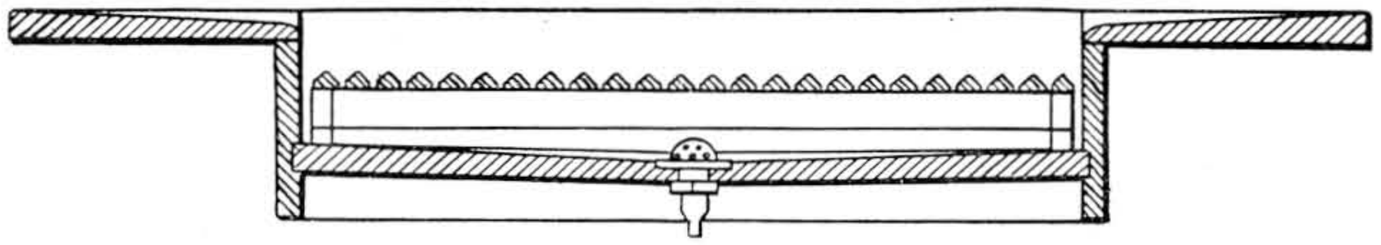

FIG. 158. DARK-ROOM SINK

Water should be laid on, if possible, from two taps;[1] one supplies the washing tank and is arranged at one end of the sink, while the other, near the centre, is used for mixing solutions, rinsing, etc.[2] It is well to choose taps of a long-neck pattern, and to fix them so that they project from the wall to about the middle point of the sink, placing them at a height such that they allow the passage under them of the tallest vessels used when standing in the bottom of the sink or on the grid.[3]

The waste pipe should preferably be covered with a perforated dome-shaped cap, to prevent its stoppage by odd pieces of film or paper.[4] The waste pipe should also be provided with a siphon, with an inspection plug at each bend, in case the pipe becomes stopped up.

260. White Light in the Dark-room. Apart from the safelights for the dark-room, which we have studied in Chapter XIX, there must obviously be ordinary lighting, chiefly for cleaning, getting things ready, and examining negatives, etc., after fixation. Where electric light is used, steps must be taken to avoid confusion, during working, between the switches operating the white light and those operating the safelights. The switches for the white light may be operated by removable keys, or may be placed higher than the others, or be of a different design and material.[1]

To avoid dazzling the eyes and rendering them slow in getting accustomed to the safelight, any white lights in the dark-room should be provided with ground glass or opal diffusers, so as to render the filaments or flame indistinguishable. The lamps should be arranged as high as possible so as to be out of the direct field of view.

261. Equipment of the Dark-room. It is a good rule that the dark-room be used only for operations which cannot be performed except in non-actinic light. An extra "work-room" should be provided, with a sink and one or two tables and cupboards, for any work which can be done in white light, e.g. weighing chemicals, preparing baths, intensification and reduction of negatives, toning, and washing[2] prints, and drying. But let it be borne in mind that neither of these rooms, where the atmosphere is always somewhat damp, is suitable for keeping stocks of plates, papers, etc. There should, however, be one or two drawers in the table, for use when loading slides, for opened packets, and sufficient material to last the day only.

The table used for loading and unloading slides should be far enough from the sink to be out of the range of any splashes, and not in the direct rays of the lamp. In a very small room,

[1] In a dark-room often used for the handling of large plates it is an advantage to be able to operate one of the taps by foot to give the operator free use of both hands.

[2] A hot-water tap, while not essential, is often useful.

[3] The water supply being usually at a lower temperature than that best for the various baths, it is convenient, for diluting stock solutions at the time of use, to have a separate container of about two gallons capacity, in which the water can come to the temperature of the dark-room and give up at least a part of the gases dissolved in it.

[4] If it is wished to wash large prints in the same sink, it is useful to fit a support for a vertical tube in the waste pipe, the arrangement serving the purposes of an overflow.

[1] It is possible, for example, to use a push-pull switch, worked by a pedal, to light up momentarily a lamp with a white or bluish ground glass window used for examining negatives and prints immediately after fixing.

[2] If the dark-room and workroom are next to each other, the sink may be extended through the partition by making a passage through the partition. This should be of a size to allow space for a dish between the grid and the top of the aperture. The amount of light which can thus enter the dark-room will not be serious if the communication with the workroom is made in the darkest corner of the latter; a movable trapdoor or a blind of rubber cloth may be used as a safeguard.

a folding table with a cloth cover can be used, being erected only when required.

The dark-room should contain only absolute necessaries in order to facilitate working in the dim light. All useless shelves and cupboards should be vetoed; they only encumber a dark-room and make it difficult to keep it clean. A rack suitable for draining dishes under the sink, a shelf above the sink for bottles of solutions, and under this shelf a rack containing notches to hold measuring and other glasses upside down, form, with the table for loading dark slides, the only necessary equipment of a dark-room used for negative-making.

If printing on development papers is to be done in the same room, there must obviously be provided a printing box and a cupboard for the printing frames and opened packets of papers. If no other room is available, there is also the enlarger to be included, which may, however, be of the vertical type, and thus save space.

For ease in cleaning, avoid securing to the walls any fittings which can remain unattached. For the same reason, tables[1] and shelves should be painted with some washable preparation, or covered with linoleum, so that they can from time to time be sponged with a wet rag. It is even well to get rid of sharp corners in the room by nailing into them strips of wood of triangular cross-section.

A soap dish above the sink and a roller towel on one of the walls should not be forgotten.[2]

[1] Sheets of fibro-cement form excellent dark-room tables if painted with bitumen or other waterproof paint. Sheets of rubber cemented on to tables of hard material greatly reduce the risk of breaking glassware.

[2] One cannot too strongly impress the necessity of *rinsing the hands in clean water before drying on the towel* after contact with any chemical substance, dry or in solution. This precaution is particularly necessary in the case of the fixing bath, which by contamination of the towel is the cause of many failures through handling sensitive films with fingers which are supposed to have been wiped clean.

CHAPTER XXI

DARK-ROOM ACCESSORIES

262. Tanks and Dishes. If only one or a very few negatives are treated at a time, the plates or cut films may be laid flat in a shallow dish, but when large numbers are often treated at once much time is saved if they are placed in a deep tank holding several plates vertically.

Dishes are made with the sides splayed outwards,[1] and with a lip at one of the corners for pouring the liquid out. The dishes most frequently used are not deep enough, especially in large sizes; the depth being usually the same for a dish 20 × 24 in. as for one 5 × 4 in.

For many years it was usual to make projecting ridges on the inside of the bottom of the dish to facilitate the removal of the plates. This practice was a nuisance in the use of papers and is now almost entirely abandoned. In its place we have a shallow channel along the two long sides of the dish, which allows of the introduction of a finger nail or a hook under the plate to lift it.

Tanks for vertical development have for a long time been made with grooves in the two opposite sides, or carrying a movable framework fitted with grooves. One plate is inserted in each pair of slots or sometimes two back to back. The removal of the plates by their edges is not always easy, and the grooves are often very close together, thus reducing the quantity of liquid in contact with the sensitive film under treatment. These types of vessels, moreover, cannot be used for cut films.

A developing tank invented for the use of the French Military Aviation (E. Cousin, 1914) was a marked improvement on vessels for vertical development then known; it was adopted afterwards by the various allied armies, and its use has spread in all branches of photography, either in its original form for plates, or, after certain modifications, for cut films.

The plates or films are placed singly in metal frames or hangers[1] (Fig. 161), where plates are held during all the operations until drying, or even including drying, in the case of films. The frames, once filled, are introduced one by one,[2] and left for the time necessary in the different baths and in the washing tank. Hangers are supported by their crosspieces on the top edge of the tank or on an internal ledge (Fig. 160), the latter arrangement facilitating the fitting of a light-tight lid, which enables white light to be turned on in the dark-room during development, if need be.

The tanks should always be of such size that the plates are covered by at least $\frac{3}{4}$ in. of liquid and allow $\frac{3}{4}$ in. of liquid below them, for the accumulation of used developer or the deposition of sediment and insoluble matter.

The capacity of these vertical tanks is considerable (about 3 gallons for 12 × 10 in.), and it would be ridiculous to pour the by no means exhausted developer into a bottle every time it is used, to protect it from spontaneous oxidation. A very ingenious way of protecting the developer consists in placing in the tank, when not being used, a *floating lid* (shown in position on the tank in Fig. 159). This lid fits in the vessel with as little play as possible, thus reducing the surface of liquid in contact with the air.[3]

It is easy in a given tank to treat plates or films of any size smaller than those provided for. Hangers for plates 7 × 5 in. upright can

[1] The sides of dishes are often made too much splayed out, to facilitate the packing of one inside the other for transport and storing. It is thus very difficult to move a dish half full of liquid or to rock it even gently without spilling some of the liquid. The fluting on the sides of glass dishes concentrate locally on the sensitive emulsion the light reaching them obliquely, thus sometimes giving rise to fogging restricted to narrow black shaded bands along one edge of the plate or film.

[1] The frame shown in plan and elevation in Fig. 161 is of the type used for plates. To assure a better hold on a film after it has been softened by wetting, curved frames may be used, or, for large films, frames with a deep rebate (which can then be perforated to allow free circulation of the liquids) or frames with spring clips at the four corners. If curved frames are used the emulsified surface of the film must be the concave one.

[2] To avoid air-bells both plate and film hangers can be introduced at an angle (not vertically). As soon as the whole emulsion is wetted the hanger is lifted up and down a few times. The hangers must not be too close together; a gap of $\frac{3}{8}$ in. for plates 7 × 5 in. or about $1\frac{1}{4}$ in. for plates 15 × 12 in. should be left.

[3] The floating lid can be improvized by cutting a piece of impermeable paper (paraffin waxed paper) of size about $\frac{1}{16}$th of an inch smaller than the internal dimensions of the vessel. This paper can be replaced when it becomes damaged.

be used for plates 5 × 4 in. on their sides.[1] Also, movable crosspieces may be fitted on which to rest frames smaller than those intended.

263. Special Tanks for Roll Films. A description of all the methods for development of roll films would carry us too far afield. For the amateur's roll film we have tanks into which the film may be introduced in daylight, no dark-room being required. For cinematograph films we have frames immersed in a large vessel, or horizontal drums, with the film wound on them, revolving on an axis. The lower part only is immersed in the bath, and the steady rotation ensures uniform action on the film. Different types of apparatus for the treatment of the amateur's spools singly will be found in any catalogue of photographic apparatus; for equipment of the cinematograph dark-room we must refer the reader to special works.[2]

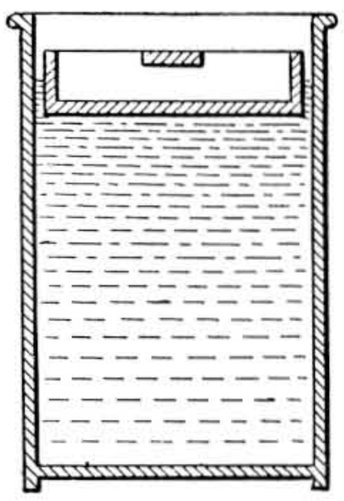

FIG. 159

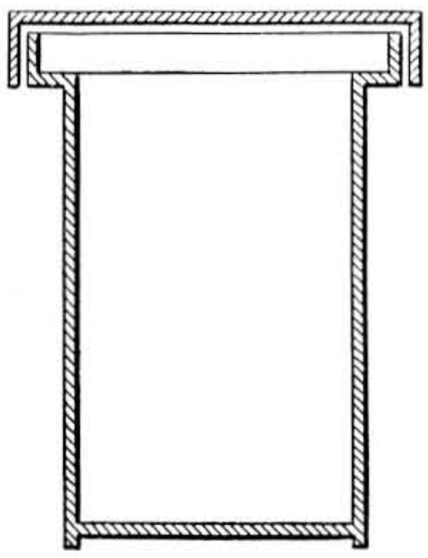

FIG. 160

DEVELOPING TANKS

The commercial processing of roll films (developing and printing) for the amateur is generally done in deep tanks, the films being held by clips hung on a rod, by single hangers, or by racks holding several films. Long films are often fastened at both ends by the same clip, the two sides being held apart by a cylindrical roller weight or by a cross-piece of the frame.[3]

For long strips of film used in automatic cameras for aerial photography, viz. films too large to be handled on frames similar to those used in cinematography, the only practical apparatus is, to our knowledge, the large-scale model of the Kodak cylindrical tank, made for development of roll films in daylight (Eastman Kodak Co., 1918). The film to be developed is wound on a suitable spool with a sheet of celluloid provided on its two edges with toothed rubber bands, which keep the coils of the film from one another, permitting the access of the liquid and the escape of air when the successive solutions are poured into the cylindrical tank holding the spool (the model made for the U.S. Air Service takes films 25 yd. long and about 7 in. wide).

We may finally mention, without describing any of the many types, the machines for processing (including fixing and washing) ciné film, film in long strips for aerial photography, and roll-films used in cameras for amateurs.

264. Materials for Tanks, Hangers, and Dishes. Owing to its absolute impermeability and resistance to nearly all chemical reagents, *glass* is certainly the best material for the manufacture of tanks and dishes, at least in the sizes required by the amateur. After proper cleaning, a glass dish can retain none of the products it previously held, and can therefore be used alternately for very different operations without risk of contamination. Transparent glass dishes are sometimes used in order to be able to illuminate the negatives from below in the course of development or fixing in order to follow the progress of the operation without touching the plates.

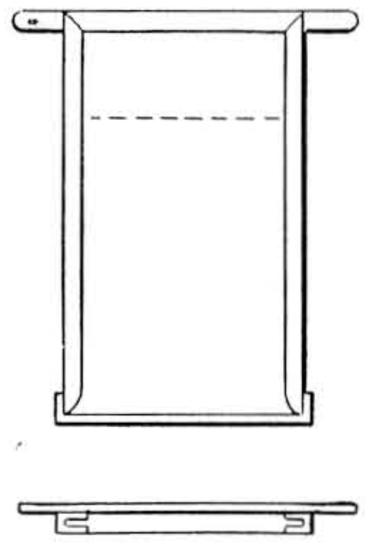

FIG. 161

DEVELOPING HANGER

Porcelain (white *translucent* ware) has the same properties, but is no longer used for dishes and tanks. Dishes sometimes described as "porcelain" are nearly always made of some variety of earthenware (opaque porous ware) with the surface protected by a glaze, which is fragile and easily chips off. This glaze readily cracks, allowing the products to penetrate into

[1] Tanks can also be made to take frames of various sizes, for instance, 7 × 5 in. lying on their side, lengthways; or 5 × 4 in. upright, crossways.

[2] J. I. Crabtree, *The Development of Motion Picture Film by the Rack and Reel Systems* (Kodak Ltd.).

[3] In case a film should drop to the bottom of a tank, a net or basket is sometimes kept at the bottom from where it can be drawn up by cords or rods hooked on the upper edge of the tank.

the porous substance, whence they can only be partially removed by washing, or even by the action of powerful reagents. Not only should an earthenware dish be kept as far as possible for the same bath, but one should avoid leaving the solution in it longer than is necessary for the operation; for if a solution of a salt is left in such a dish it tends to crystallize out in the earthenware, breaking up the glaze and sometimes even the earthenware itself. This does not apply, however, to the special stoneware made for the chemical industry and used for the manufacture of vertical tanks for handling numbers of roll films at a time.

Brief reference may be made to dishes of *japanned card*, also to tanks and dishes of celluloid or of moulded composition. These nearly always split or become deformed after using a few times.[1]

Slate is excellently adapted for the construction of dishes of large size, being strong and having perfect resistance to almost all chemical reagents.[2] At the same time, it is very necessary to protect the edges of the tanks used for fixing to prevent the hypo from penetrating into the material along the planes of cleavage, and separating the layers when it crystallizes. This, however, only occurs after very long use.

Tanks of *cement* are useful for washing; they can also be used for development in dilute baths or baths only slightly alkaline. They are attacked by fixing baths, particularly acid fixers, as well as by all acids in very weak solution.

Dishes of *wood lined with gutta-percha* about $\frac{1}{4}$ of an inch thick are very satisfactory in large sizes by reason of their lightness and strength. They are not much use, however, in hot climates, where the gutta-percha becomes very soft. If left dry for a great length of time these dishes are liable to crack, but it is easy to repair them with a hot iron. Wooden dishes may be made impermeable with molten paraffin wax applied very hot with a brush and smoothed on the surface with a hot iron; also with several coatings of asphalt varnish, allowed to dry with free exposure to the air before using.[3]

Vessels of *enamelled cast iron* made by manufacturers for the chemical industry resist the usual photographic reagents well. The iron does not become deformed, and the enamel, having the same coefficient of expansion as the iron, does not tend to crack. Unfortunately, it is not the same with dishes of *enamelled sheet iron*, or *enamelled steel*, of which the coating is often cracked before delivery.[1] Once the metal underneath is bare its corrosion is rapid, and the enamel soon comes off in flakes on both sides of the cracks. Also, bad quality enamels often used in this branch of manufacture are superficially attacked by the alkali of developers, and are then by no means so easy to clean as when the surface is polished.

Ebonite-covered steel, which is sometimes used for medium-sized tanks, is not open to the same objections, as ebonite is sufficiently elastic not to crack in case of slight temporary or permanent distortion of the metal.

When bare metal is employed, the action of the metal on the bath, as well as that of the bath on the metal, has to be considered. In particular, *copper* and *tin*,[2] with their *alloys* (with the exception of the copper-nickel alloy to be mentioned), *bronze*, *brass*, and *solder*, should *never come into contact with a developer*, owing to the certainty of an intense chemical fog resulting[3] (J. I. Crabtree, 1918).

In considering the choice of a metal, a distinction must be drawn between a material suitable for amateurs, which is not likely to be exposed for long periods to chemical action, and one used on a commercial scale, which may be almost continually in contact with the solutions used.

Stainless steel for chemical industries (with 18 per cent chromium and 8 per cent nickel), pure nickel, nickel alloys rich in nickel (Monel, Inconel) are suitable for development, fixation and washing; copper or brass thickly and evenly nickel-plated, are suitable for vessels used for development and washing; they may also be used for fixation, but the time of exposure to

[1] These dishes must never be used for baths containing caustic alkali or a large proportion of alcohol.

[2] Dishes for development and washing must be joined by cement; those for fixing, with gutta-percha.

[3] Plain wood, preferably one of a resinous nature, may be used for tanks, if the latter are metal-bound (otherwise they may leak at the joints, especially if allowed to dry), and are always kept for the same operation. The wood, being porous, does not permit the use of successive "incompatible" baths.

[1] This is nearly always the case with dishes having the vertical sides *joined*. Dishes of stamped iron plate are less liable to deformation, and have a better resistance, the enamel only breaking in the case of rough treatment.

[2] Copper, especially, tends to promote aerial fog (§ 339), which may be avoided by desensitization; tin produces a fog that it is impossible to diminish.

[3] Rubber of ordinary quality (tubing, stoppers, etc.), which contains antimony sulphide (always present in the red variety) and sulphur, also causes fog if allowed to contaminate the developer. Pure rubber (English sheet) does not give rise to this trouble.

hypo must be strictly limited to the time necessary for fixation, and the vessels must be washed immediately afterwards.[1]

Tanks of cast iron and of mild steel have been used with advantage for developers with a strong content of caustic alkalies.

Lead is not attacked by developing or fixing solutions (the latter may contain acid, alum, or silver salts), nor does it affect the solutions.[2] Wooden tanks lined with lead (the joins must be made by welding and not with a tin solder) are very satisfactory, as are small lead-lined steel tanks. Type metal has similar properties, and may be used, particularly for taps in photographic tanks.

Zinc is not affected by pure water, but it is rapidly attacked by photographic solutions, even when very dilute. When tanks for washing are made of or lined with zinc, it is essential to restrict the corrosion of the metal by at least rinsing plates or prints before putting them into the tank. The tank should always be emptied and drained after use. With some care, tanks of galvanized iron may, however, be used for slightly alkaline developers.

In general, all metal vessels which come into contact with developing or fixing solutions should be made of one homogeneous metal. Of two metals in contact with each other and with the solution, one is always more quickly corroded than it would be alone, owing to galvanic action. Most alloys thus suffer greater corrosion in contact with solutions than would either of the constituents separately.[3]

265. Glass-ware. The photographic outfit comprises a number of glass articles, notably graduated glasses (measuring glasses, conical glasses, and measuring cylinders),[4] the graduations of which are often marked with a pleasing disregard of exactness (the graduation of measuring cylinders is generally less crude than that of the conical measures, and is, at any rate, fairly uniform), stirrers[1] (glass rods rounded at the two ends by heating), a dropping bottle,[2] and funnels for filtrations. In a dark-room of any size a funnel stand of wood is a useful thing; the "notch" type is preferable to the "ring" pattern.

For the preparation of baths it is useful to have some pots or pans of enamel ware or aluminium in which water may be heated, the dissolution of the chemicals being done in a bottle or in some vessel of a material resistant to the substances used. For warming-up any solutions, basins of porcelain or pyrex glass, or, more economically, porcelain kitchen casseroles, should be used exclusively.

We shall discuss more fully in a later chapter the question of bottles and glass jars (§ 271).

266. Cleaning of Utensils. Dishes, tanks, and all vessels or utensils of glass or earthenware are best cleaned by running a little strong hydrochloric acid all over. The acid can be used a great number of times. With a hard brush or a rubber sponge it is then very easy to remove all adherent deposits, and the cleaning is finished by rinsing in pure water and draining. It is better not to wipe; the cloth used is generally dirtier than the vessel to be cleaned.

If a point is made of cleaning vessels immediately after use, it is usually sufficient to rinse them in water to be sure they are perfectly clean.

Adherent deposits on the inside of bottles can often be removed by shaking up with lead shot.

Wooden developing frames or racks placed successively in developing and fixing baths must be cleared of all traces of the hyposulphite which has penetrated into the wood before being used again. This can be done by allowing them to remain for some time in a solution of about 80 gr. to the gallon of potassium permanganate (followed by a rinse in pure water). The same precaution can be taken with metal

[1] If absolutely necessary, the tanks may be soldered *externally*; developing hangers should never be soldered.

[2] In general, any metal, when placed in used fixing baths as in solutions of silver salts, becomes covered with a weakly adhering film of silver, which gives only very incomplete protection against the action between the metal and the solutions in which it is immersed.

[3] Many of the data given in this paragraph are taken from the papers of J. I. Crabtree and G. E. Matthews, published in 1923 and 1924.

[4] The risk of breaking measuring glasses is greatly reduced by fitting a projecting band of rubber round the top edge.

At its upper surface a solution ascends the walls of a vessel (capillarity). The observer must read the lower surface of the meniscus thus formed, the eye being on the same level.

[1] When using a stirrer in a vessel of thin glass it is well to cover the ends of the stirrer with a small piece of rubber tube. For mixing large quantities of liquids, a large spatula or paddle of soft wood is best, but each of these must be kept strictly for a particular bath, the name being marked on the handle.

[2] The volume of the drop varies with the nature of the liquid and with the temperature, but it varies most with the outside *diameter* of the dropping tube. The drops given in some formulae are, as in pharmacy, the drops delivered by a *standard dropping bottle* with capillary tube of external diameter 3 mm.

frames,[1] but they need not remain so long in the bath.

Metal tanks[2] can, if cleaning with water is insufficient, be rinsed occasionally with hydrochloric acid diluted with about ten times its volume of water, but the vessel must not be allowed to remain in contact with this acid bath too long.

Too great emphasis cannot be laid on the necessity of carefully cleaning every new vessel before taking it into use. For the first cleaning of metal goods (except for aluminium, which can be cleaned with soap or with a solution of trisodic phosphate) hot soda solution should be used to remove the greasy material which has been employed for polishing or for the protection of the surface.

267. Various Accessories. The *racks* sold for drying negatives are usually of bad design. As a tradition from the days of wet collodion, when the photographer had to carry his entire apparatus to the place of operation, these accessories are of folding pattern, to the detriment of their stability; their grooves are also too close together, and are of rectangular section, whereas they should be of V-section, so as not to allow the wet gelatine to stick to the sides of the groove. For professional work, and in all cases of large sizes, the racks should be rigid, with well-spaced grooves, allowing free renewal of the air round the drying gelatine.

As regards *balances*, it is best to choose the Roberval type, thus permitting the weighing of substances in a weighed vessel without interference of the usual stirrups supporting the pans. The sensitiveness of a balance being about a two-thousandth of the maximum weight it will carry, it is well not to buy a balance which is capable of dealing with greater weights than are necessary. If, in a large establishment, it is necessary to have balances for heavy weights, it will be best to provide a separate balance for light weights. A Roberval balance, having a very long needle, will weigh 3 oz. to 7 oz. to the nearest grain.[1]

A very useful accessory in the photographic dark-room is a small clock having only a minute and second hand, both being visible in the semi-darkness of the dark-room, or, better still, a *metronome,* set to beat half seconds or seconds.

A final item of equipment is a thermometer, fixed at some distance from the wall, to indicate the temperature of the dark-room; also a small thermometer, graduated on the stem, for placing in tanks or dishes to ascertain the temperature of the baths.[2]

[1] The silver which is deposited on the metal frames forms an uneven layer liable to stick to the gelatine of the negatives. It is best to remove the large deposit of silver from time to time by means of a steel brush. After this, proceed with the treatment indicated above, and then brush with a tooth brush, rinse in water, and put to dry.

[2] For stainless steel use nitric acid diluted as stated above for hydrochloric acid.

[1] A very practical type of balance, since it avoids the use of the very small weights, often lost, consists of a graduated beam along which a small mass can be moved as in the steelyard.

[2] Alcohol thermometers for photographers should not have the liquid coloured red, but deep purple blue, in order that it may be easily seen in non-actinic light.

CHAPTER XXII

CHEMICALS; PREPARATION OF SOLUTIONS

268. Choice of Chemicals. Substances which are entirely free from chemical impurities cannot be obtained as ordinary commercial products, and are only necessary for certain scientific investigations, for which purposes they are specially prepared by elaborate processes of purification. Intermediate between the purest chemical products and the raw materials, there are a large number of grades, which differ from one another in the amount of active constituent they contain, as well as in the nature and proportion of the various impurities. Certain impurities, according to the use for which the substance is needed, are not injurious. For instance, impurities which merely lower the amount of active substance present may be permitted, but others, which would retard or interfere with the intended reaction, should be excluded.

For this reason, chemical substances to be used in pharmacy must comply with the standards of purity laid down in the *British Pharmacopoeia*. Similarly, many firms issue certain specifications to their purveyors of chemicals, which state the limits of admissible impurities in each product, and fix the price according to the actual content of active substance. It may be gathered from these remarks that care should be exercised in buying photographic chemicals, and that a comparison of prices is not the only consideration to be taken into account.[1]

In his own interests, therefore, the photographer should purchase his chemicals from reputable specialized firms, who, from their knowledge of the ultimate uses of the materials, can supply the required qualities.

269. Anhydrous, Crystalline, Efflorescent, and Deliquescent Substances. The amount of active substance contained in a product varies considerably with the chemical form in which it is obtained, and also with the extent to which it may have been changed by the action of the air.

Many salts exist in two forms, *anhydrous* and *hydrated*, the latter appearing most usually in the form of crystals. Anhydrous sulphite of soda,[1] for example, is equivalent to exactly twice its own weight of the crystalline sulphite, the difference (assuming both substances to be pure) representing the *water of crystallization* contained in the crystalline salt. The fact that this numerical relationship is fortuitous and applies only to the case of sodium sulphite, is often overlooked. Thus, anhydrous carbonate of soda is equivalent to 2·7 times its own weight of the crystalline carbonate, and anhydrous hyposulphite of soda to approximately 1·5 times its own weight of the crystalline salt.

The water, which constitutes an integral part of hydrated salts, is not always firmly retained, and, in a very dry atmosphere, certain of these salts *effloresce*, the outer coating of the crystal being converted to the powdery anhydrous compound.

Other salts, both anhydrous and hydrated, readily absorb moisture from the air,[2] dissolving progressively in the water they have absorbed. These *deliquescent* or *hygroscopic* salts, as they are called, are very difficult to keep in good condition, and their weighing-out becomes so uncertain that it is often advisable to prepare from these substances, immediately they are received, a stock solution of known concentration, from which, at any future time, the various mixtures may be prepared.

270. Unstable Substances. Many other substances change very rapidly, either spontaneously or due to the influence of atmospheric oxygen. These changes are usually accelerated by the presence of moisture. In this manner sulphite of soda, particularly as the crystalline

[1] By way of a typical example, precious metal refiners supply "chlorides of gold" in which the amount of pure gold varies from 15 per cent to 48-50 per cent. The difference between the various samples can only be shown by actual estimations. It is, therefore, quite easy for an unscrupulous retailer to substitute the low grade products for those richer in gold, thus realizing an appreciable profit at the expense of the consumer.

[1] The rules of chemical nomenclature state that the name of a salt should be formed not from the base (soda, potash, ammonia, etc.) to which it corresponds, but from the metal (sodium, potassium, and the hypothetical radical, ammonium): we shall adopt, as far as possible, the nomenclature in current use, although it should be understood that the two names are equivalent and refer essentially to one and the same compound. (The only exception is a substance which is not used in photography, namely, chloride of lime. This is the common name for calcium hypochlorite, a salt which differs widely from calcium chloride.)

[2] Products like quicklime and liver of sulphur that swell in damp air without dissolving in the absorbed water may burst a badly stoppered jar.

salt or in solution (in which case the weaker the solution the more rapid the change), is gradually converted into a mixture of sulphate and dithionate by absorption of oxygen. Similarly, developing agents turn brown or black, in time, by oxidation, especially if they have been transferred to a damp vessel; cyanides are gradually converted into carbonates by the carbon dioxide in the air. In a manner similar to the loss of gas from seltzer water, ammonium hydrate constantly loses ammonia gas, which, dissolved in water, forms the active constituent. Solutions of formaline, or formaldehyde, deposit a white insoluble mass (trioxymethylene) produced, without external interference, by a transformation of the original gaseous product.

These examples, which could be multiplied indefinitely, indicate, in the first place, that every precaution should be taken to store the substances as carefully as possible, and also that, as regards the majority of chemicals which are used, the actual amount of active substance present is very uncertain.

Fortunately, the ordinary photographic processes do not require great precision. A considerable variation of an active substance in a photographic bath would often pass unnoticed. It is therefore useless to discuss the relative merits of formulae differing from one another in a small degree, since the variations, which occur unknown to the operator, are in many cases much larger.

271. Storage of Chemicals. Many solid substances, which are not readily affected, are usually delivered in bags or cardboard boxes, to reduce carriage costs, but there are very few photographic chemicals which, if stored in this manner for any length of time, would not become spoiled to a greater or lesser extent. Moreover, it is not infrequently found that the labels or inscriptions on such parcels are lost or become illegible, or that the bags are split with the consequent risk of annoying losses and mistakes.

Stable substances, such as hyposulphite, alums, and the various natural products, which are occasionally used, gum, starch, etc., should be stored in wooden boxes, or the bags containing them should be placed in labelled metal boxes.

All other substances should be stored in tightly-stoppered glass[1] or earthenware receptacles. For this purpose, narrow-necked reagent bottles are very much easier to seal hermetically than the ordinary type of wide-mouth bottle. Druggists usually seal off their bottles with flat corks which are cut off level with the neck. This method, although perfect at the outset, does not afford such an airtight joint once the cork has been removed and replaced. It is therefore better to obtain, both for ordinary products and for unstable substances, a series of bottles of required capacity, fitted with good quality cork stoppers of tall conical[1] shape, which are easily removed by hand, and will last for a considerable time.

It is frequently supposed that *ground-glass stoppers* are preferable to cork. Although they must of necessity be used with certain liquids, such as nitric and sulphuric acids, which attack both cork and rubber, the fitting so obtained is far from airtight, and there is the additional risk that the stopper will stick tightly unless smeared with paraffin.[2] This type of stopper should be avoided for alkalis and their solutions, and for very volatile liquids, such as ether.

Many substances which attack cork (solutions of caustic soda and potash, hydrochloric acid, eau de Javelle) can be stored in perfect condition in bottles fitted with rubber stoppers. This method of storage is recommended for all oxidizable solutions.[3]

Beer and preserve bottles can be obtained with mechanical caps, which fit down tightly on to rubber rings. These afford a perfect airtight

[1] Bottles of blue or brown coloured glass are often considered to possess exceptional qualities for the preservation of substances or solutions which are either decomposed or oxidized more readily when exposed to light. The protection afforded by coloured glass is absolutely illusory if the exposure is at all prolonged, as is generally the case where bottles or flasks are left in a well lighted room. The few substances which are unstable to light (e.g. solutions of mercuric iodide, used for intensification) should be stored in opaque bottles (either stoneware bottles or ordinary glass bottles covered with black paper).

[1] Cork stoppers can be made more flexible by rolling them under pressure between a block of wood and the top of a table: they can be readily filed down, if necessary, to improve the conical shape. A conical stopper of pliable cork affords a perfectly airtight fitting owing to the pressure which it exerts on the glass as it is gradually forced in. When inserting the cork, about half its length should be left above the neck.

[2] Stuck stoppers can usually be loosened by leaving the bottles for about 48 hr. under a depth of about 6 in. of water, the water gradually finding its way between the stopper and the neck. Sharp tapping with a stout *glass* tube is another method which is often successful.

[3] The rubber bungs or stoppers used for developing baths should be made, as far as possible, of pure flexible rubber (§ 264 footnote), which, by reason of its length of service, is in the end more economical than "loaded" rubber. In any case, red rubber should be avoided.

fit, which is specially useful for oxidizable liquids and solids. It is also possible to procure rubber caps, which may be drawn right over the neck of a bottle fitted with an ordinary cork stopper, in order to render the joint more airtight.

In France, the law demands that in a professional establishment, all poisonous substances (which are always delivered with a red label and a second label marked " Poison ") shall be kept under lock and key in a special cupboard. All other chemicals may be stored on shelves in the room where the baths are prepared. To avoid all chance of dangerous mistakes, no beverages or pharmaceutical products should be kept in this same room.

The amateur must never store photographic chemicals or their solutions near household or pharmaceutical preparations, and it is important that they should be inaccessible to children. Bottles of similar shape to those used for beverages should be avoided, or at least the old labels should be removed and new ones indicating the contents made clearly visible. As the common photographic chemicals are not poisonous, their accidental ingestion will have only disagreeable consequences.

272. Labelling of Jars and Bottles. The necessity for labelling very clearly the containers of all substances or their solutions[1] immediately they are bottled cannot be stated too emphatically. Neglect of this elementary precaution, especially in a dark-room to which several people have access, leads inevitably to annoying mistakes and to loss of materials which cannot be identified.

Labels written in indian ink on white paper can be rendered indelible by painting them, after the gum has dried, with a brush dipped in celluloid varnish or melted paraffin wax. If this is not done, a bottle should be held with the label upwards when pouring out liquids, so that if any of the solution should trickle down the sides the label will remain intact.[2] The labelling of all large receptacles should be done with paint.

273. Solutions, Concentration, Solubility, Saturation. A solid, liquid, or gaseous substance dissolves in a liquid when it disappears into the liquid, giving a homogeneous *solution*; the dissolved substance is called the *solute*, and the liquid in which it is dissolved the *solvent*; evaporation of the solvent leaves the solute unchanged.[1]

For practical purposes[2] the *concentration* or *strength* of a solution may be taken as the weight in ounces of the solute in 100 oz. of the solution. For example, if 20 oz. of hyposulphite are dissolved in a certain quantity of water and, after solution, made up to 100 oz., then this solution is said to be 20 per cent, or a 20 per cent hyposulphite solution. (When the solvent is water, the fact is not usually stated.)

At any one temperature, a solvent will dissolve only a fixed amount of a salt, and when the solution has attained its maximum concentration it is said to be *saturated*. This concentration is known as the *solubility* at the temperature in question.

Except in very rare cases the solubility of a salt increases with rise in temperature. On cooling a saturated solution, the excess of the solute over the solubility at the lower temperature separates out in the form of crystals, which are generally much purer than the original substance (purification by crystallization), since the impurities present have not been able to reach their saturation point, as long as the amount present in the salt is not considerable.

In certain cases, however, a carefully cooled saturated solution will not deposit crystals, but will remain in unstable equilibrium. Such a solution, called *supersaturated*, will deposit the excess of salt in solution immediately, if a speck of the same salt (*germ*) is brought into contact with it.

The speed of solution depends on various

[1] It is possible, for provisional labelling, to write on very dry glass with a stick of aluminium. In a laboratory where large numbers of solutions are prepared it is often very convenient to etch or roughen a small area on a series of bottles, the matt patch allowing of short notes being written in pencil.

[2] To avoid loss of time when renewing the stock solutions of baths which are in constant use, it is often useful to have a copy of the formula for each particular bath in the form of a label on the bottles in which they are kept. The formulae may also be copied on to a piece of white cardboard, mounted under glass and fixed to the wall near the place where the weighing is carried out.

[1] The volume of solution obtained is generally intermediate between the volume of the solvent and the sum of the volumes of solvent and solute. Where the solution of a solid takes place without any chemical reaction with the solvent, there is usually a quite perceptible lowering of temperature, notably in the case of the solution of hyposulphite in water. The solubility of a salt is usually reduced by the presence of a second salt derived from the same metal or acid as itself.

[2] In physics the concentration is sometimes expressed as the weight of the solute in 100 grm. of the solution, the curves expressing the solubility at various temperatures being in this manner reduced to straight lines.

factors. A porous or very finely divided substance will dissolve much more readily than one in the form of large compact lumps. Nevertheless, water should not be poured on to a powdered anhydrous substance, but the latter should be dropped into the water in small quantities to prevent the formation of a large compact mass of the hydrated salt. Solution takes place more rapidly in hot than in cold water, and is accelerated by agitation. Since the solution is denser than the solvent, there is a tendency for a saturated solution to be formed in the neighbourhood of the salt unless this is suspended in a porous pot or a bag at the top of the liquid.

274. Expression of Formulae. A correctly-stated formula gives the substances in the order in which they are to be dissolved.

The quantities are expressed in weights of solid substances, or volumes (at 65° F.) for liquids (grammes and cubic centimetres for preference).

The weights or volumes are arranged to give a total volume of 20 oz. (or 1,000 c.c.). The volume of the principal solvent need not be expressly stated, but may be indicated by the instruction," Sufficient quantity to make 20 oz." or some such equivalent term.

When a formula denotes that a certain number of drops of a solution are to be measured, to avoid confusion the number is usually given in roman figures. It is, however, better to prescribe the quantity in cubic centimetres or minims of a more diluted solution.

275. Water used in the Preparation of Baths. With the exception of distilled water, rain-water, and water melted from ice, the water usually at our disposal (tap, river, and well water) contains dissolved salts (chiefly bicarbonate and sulphate of lime),[1] suspended matters (dust, rust particles from the iron pipes), organic substances of animal and vegetable origin, which in colloidal form escape the most perfect filters, and after coagulation deposit in the baths as a fine mud, and, lastly, dissolved gases, notably oxygen and carbon dioxide.

Business establishments, possessing a water supply of poor quality, but which are able to obtain distilled water quite cheaply (condensed water from boilers) should certainly use the distilled water for the preparation of all baths, since the only impurities it contains are small quantities of dissolved gas.

Amateurs and professionals, who would have to purchase their distilled water from outside sources, but who are supplied with ordinary drinking water, should use freshly boiled water for the preparation of the baths. Boiling converts the bicarbonate of lime, which forms the larger part of the dissolved salts, into the insoluble carbonate of lime, coagulates most of the organic matter, and expels the dissolved gases, which can re-dissolve only after the water has been cooled.

A few substances form traces of precipitate in presence of the sulphate of lime which exists in boiled water, but if the baths are made up in relatively small quantities it is quite easy to filter them before use. The filtration of large quantities of solutions, such as are required in the cinematograph industry, introduces many serious complications, which can be avoided either by the use of distilled water or of water purified by chemical means.

As a general rule, therefore, distilled water is not necessary for the preparation of photographic baths,[1] in spite of the instructions to the contrary which are given in various formulae.

276. Preparation of Photographic Baths. For the weighing-out of small quantities, the balance pans are covered with small sheets of paper, which are renewed for each fresh substance. To avoid the formation of dust, each sheet is wetted under the tap before being thrown away. For large quantities the substance is gradually introduced into a tared receptacle.[2] A bottle

[1] The water in many urban districts is sterilized with *eau de Javelle* (hypochlorite of soda), the excess of which is purposely destroyed by the addition of traces of hyposulphite of soda. While infinitesimal traces of the latter salt would not cause any appreciable inconvenience, hypochlorite of soda, however, present even in the faintest traces, might quite possibly react with certain dyes.

[1] The only exceptions to the use of tap water are in the preparation of the stock solutions of the salts derived from the precious metals (silver, gold, platinum).

[2] Where a substance is obtained regularly in crystals of approximately the same dimensions it is possible to replace weighing by the more rapid method of a measurement of volume. Metal or strong cardboard boxes are cut down until they will just contain the required weight or sub-multiple of the weight of substance when filled level with the sides.

After one or two preliminary trials it is possible to paint two lines on the outside of a bottle so that, having filled the bottle to the first mark with water, the correct amount of substance will have been added when the water has risen to the second mark.

The use of a hydrometer also dispenses with the necessity for weighing. A concentrated solution of the salt is diluted continuously with constant stirring until the reading on the hydrometer corresponds with that given in the formula or with the reading previously determined with a solution accurately prepared by weight and tested at the same temperature.

large enough to contain the total volume of the bath is half or two-thirds filled with freshly-boiled warm water, into which the substances are introduced[1] in the prescribed order with constant stirring, taking care that each substance is fully dissolved before the next is added. After the complete solution of all the constituents, the bottle is filled with boiled water and, if necessary, the solution filtered or decanted off.

For the preparation of baths in large quantities, the work is carried out in a large vessel or tank, in which the final volume is adjusted

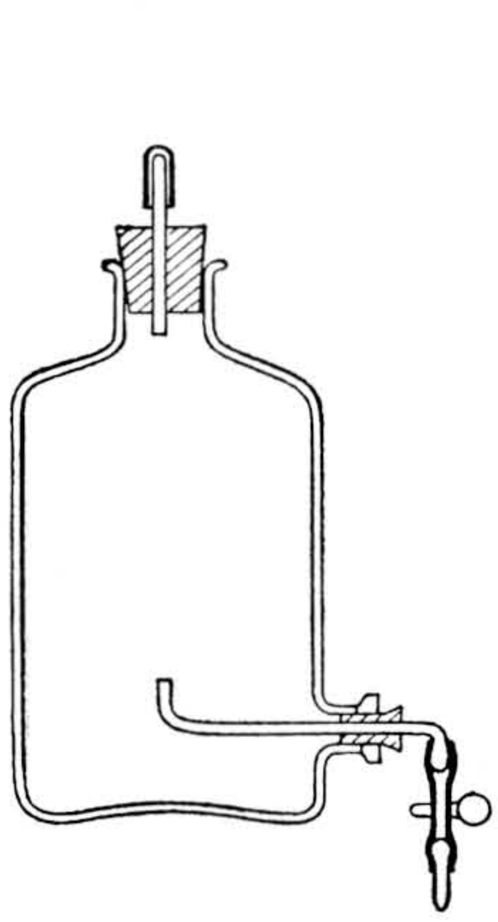

FIG. 162

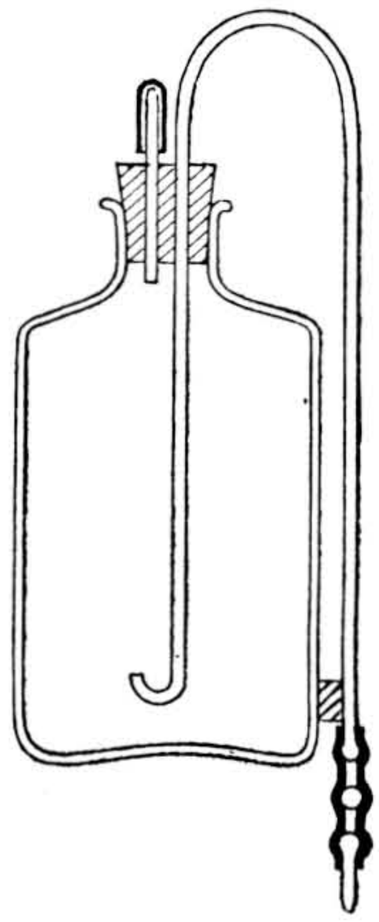

FIG. 163

CONTAINERS FOR STOCK SOLUTIONS

either to a mark on the inside of one of the walls or to a notch on the handle of a wooden stirrer placed in contact with the bottom. Having introduced a certain quantity of water, the substances, contained in a linen net fixed on a wooden frame, are successively dissolved by sprinkling them with water. When all the constituents are dissolved, the level is brought up to the mark by the addition of the requisite amount of water.

277. Filtration. Filtration through paper is usually much slower and more costly than through either fabric or absorbent pads. The process is best carried out in a wide funnel (cone 60°) with a cylindrical stem, which is plugged with a piece of cotton wool or a lightly compressed piece of sponge, or, alternatively, the cone of the funnel may be fitted with a flannel or chamois leather bag. The three last-mentioned materials may be used repeatedly, if washed in running water and set to dry[1] immediately after each filtration.

With large bulks of liquid, filtration is usually done through felt pads, each pad being kept for a special solution. In such cases, however, it is often preferable to stand the solution in a reservoir with a tap fitted at a little distance from the bottom. After the solution has cleared by sedimentation the top layer is drawn off, and it is then only necessary to filter the small quantity at the bottom, which contains the sediment and any surface scum. The decantation may also be carried out by a syphon.

278. Stock Solutions. Stock solutions may be used with advantage for all substances which are as stable in solution as in the dry state, and which are constantly being used in small quantities at a time. Weighing is then replaced by a measurement of volume, calculated from the concentration of the solution.

It has often been proposed to use saturated solutions for stock solutions, but their concentration, although well defined if maintained at a constant temperature, is liable to considerable variations. The salt, which crystallizes out on cooling, is often deposited in a difficultly soluble mass, so that when the temperature rises again the solution is no longer saturated. All concentrations which exceed the saturation value at 40° F., the lowest temperature usually reached in any commercial establishment, even during the interruption of work at the week-end, should therefore be avoided in the preparation of stock solutions.

Stock solutions may also be prepared for unstable substances, but sufficient only for one week should be made up, bearing in mind the fact that concentrated solutions keep much better than dilute solution (this is the case with sulphite of soda and sodium sulphide).

To avoid the necessity of handling a large bottle when only a small quantity of liquid is required, the stock solutions may be stored in

[1] Never pour water on to a powdered anhydrous salt as this in becoming superficially hydrated is covered with a compact crust, dissolution then being extremely slow. To dissolve such products (such as sodium sulphite and carbonate) quickly, throw them into the water a little at a time with constant stirring.

[1] If, owing to the lack of a filter stand, the stem of the funnel is inserted into the neck of a bottle, air must be allowed to escape from the bottle by placing a piece of string or twisted paper between the stem and the inside of the neck. The flow is always more regular if the end of the funnel stem is bevelled: this can easily be done on an ordinary grindstone.

bottles fitted with either a glass tube outlet at the bottom or a piece of glass tubing, which, after passing the neck of the bottle, is bent round to form a syphon (see Figs. 162 and 163). In either case, the outlet is connected to a glass jet by means of a length of rubber tubing, which is closed by a spring clip or by the insertion of a glass bead. In the latter method, the liquid is delivered by pinching the rubber tubing round the bead.[1]

When baths are prepared immediately before use by the admixture of stock solutions, insufficient care is often taken to secure a perfectly homogeneous mixture. This cannot be obtained merely by pouring out the solutions (which have been measured together in a graduated measure) into another receptacle, for the mutual penetration of many solutions is much slower than is often realized. The mixing should be carried out in a measure which is closed securely with the palm of the hand, and then inverted several times, or the liquid decanted several times from one container to another.

[1] It has been proposed to store stock solutions of developers under the same conditions as those used for stable substances, at the same time covering the surface of the developer with a layer of oil, or connecting the air space above the liquid to a source of gas which is unreactive, such as to the ordinary gas mains. These practices are not to be recommended, for they usually lead at some time or another to annoying accidents. The air inlet at the top of the bottle should be covered with an indiarubber cap when the solutions are not being withdrawn.

279. Commercial Preparations. A large number of preparations in various forms have been put on the market to relieve amateurs of the necessity of weighing the various chemicals for the solutions—

(*a*) Solutions ready for use, or concentrated solutions to be diluted with water as directed.

(*b*) Dry powders contained in boxes, sealed or stoppered bottles and tubes, and wax-paper packets.

(*c*) Compressed tablets, to be crushed between clean paper before introduction into the volume of water indicated.

(*d*) Homogeneous pastes, prepared by mixture with glycerine or dextrine solutions, delivered from flexible metal tubes similar to those employed for tooth pastes. A definite length of the paste corresponds with a certain volume of the particular bath (Guillemot, 1900).

(*e*) Paper ruled off into squares and impregnated on both sides, each square corresponding with a certain volume of the bath (Ziégler, 1901).

Owing to the diversity of the formulae used in these preparations, the only advice which can be given is to adhere strictly in each case to the accompanying instructions.

CHAPTER XXIII

HANDLING OF SENSITIVE MATERIALS
LOADING AND UNLOADING OF DARK SLIDES; REPACKING

280. Storage of Sensitive Materials. Sensitive materials should be stored in a dry place of moderate temperature, where they cannot be reached by any gases and emanations from volatile products. They should especially be protected from hydrogen sulphide (cesspools, or any work where sulphides are in use) and the impurities from acetylene. As we have already emphasized, the dark-room and the places reserved for the preparation of the baths and the storage of stock chemicals are not at all suitable for the storage of sensitive plates, films, and papers.

In an establishment of any size, the boxes should be stored on their sides in cupboards, or on the racks allocated for this purpose, so as to avoid any possible damage to the packings, caused by the boxes being piled one upon the other. The different types of materials should be classified according to the emulsion number.

Moisture, which rapidly passes through the ordinary packing materials, lowers the sensitivity quite appreciably[1], and, if the humidity is high, may cause the surfaces in contact to adhere. Heat and the majority of chemical products cause fog, which is always greater with the more rapid emulsions.

Even under perfect conditions sensitive materials undergo a more or less rapid change, which is usually more marked with films. The edges become fogged, and, as ageing proceeds, the fog band becomes broader.[2] At the same time, development takes longer, and it is no longer possible to obtain the same contrast from the emulsion as when fresh. The colour-sensitivity is also affected, the red-sensitivity being lowered much more rapidly than the blue.

281. In tropical countries, the warm and very humid atmosphere tends to produce a rapid change in the emulsions. Roll film spools exported to these regions are usually wrapped singly in lead foil and packed in air-tight cartridges. Since it would be difficult to give this individual protection to flat sensitive materials, these are often placed in wooden boxes, lined on the inside with zinc foil, and securely soldered; in this case the protection ceases immediately the box is opened.[1] Paper, which has been rendered impermeable (e.g. by paraffin wax) may be used as a separate outside wrapper for each box, and well-made metal boxes sealed with adhesive tape are very serviceable both for the transport of unexposed emulsions and for the storage of opened packets and exposed plates awaiting development. A very efficient method of preservation is by means of a strong air-tight wooden box (interior and lid lined with a thickness of zinc), the lid of which is firmly held down by bolts or clasps on to a thick layer of indiarubber. The inside is filled with old newspapers thoroughly dried in the sun. Well-dried newspapers form an excellent drying agent, but they must be re-dried every time the box is opened.[2]

282. Handling of Materials. The order of use of the materials in each different class should be decided by the age of the material; in this

[1] To protect the emulsions from moisture it has been suggested that the sensitive layer should be covered with a fatty acid, which can be removed in the developer by the saponifying action of the alkali. A somewhat similar method has been used by spies especially, in which the plates are covered with a coating of grease or varnish, development being impossible if the operator does not know that the impermeable superficial coating must be removed.

[2] Marginal fog usually occurs only on plates which mark the edge of the emulsion coating during manufacture and not on the edges of plates formed by cutting the larger ones which are coated in the works. The defect appears to be due to a wandering towards the central parts, during drying of the emulsion, of potassium bromide added as a preservative (B. Homolka, 1905). Thus it does not occur on films, the margins of which are cut away in course of manufacture.

[1] It should be pointed out that this type of packing, instead of protecting the plates, may accelerate the change if the soldering is done during very damp weather, owing to the fact that the packets have absorbed an appreciable quantity of moisture.

[2] More complete desiccation may be obtained by using calcium chloride treated in the following manner (J. I. Crabtree, 1924): Pieces of pumice or asbestos are impregnated with a saturated solution of calcium chloride, and then dried on a flat sheet of iron placed on a fire. Excellent results can also be obtained with calcium sulphate dried at a temperature not exceeding 200° C. It has been noticed that too complete drying of cinematograph and roll films increases the risk of the formation of markings (§ 242).

manner ageing of plates and films in stock is avoided.

The boxes should be opened neatly and put aside together with the black paper wrappings for future use in the packing and classifying of the finished negatives or for re-packing the exposed but undeveloped plates and film. The instructions should also be kept for future reference, in case it should be necessary to look up any special directions for that particular type of emulsion.

Opened packets should only be stored in the dark-room if they are to be used without delay; if not, they should be placed in stock, having first secured the packet with gummed paper, or at least with a strong rubber band. It is well to seal up the box with a label indicating the number of unexposed plates or films and the date on which the box was opened.

In an opened packet do not allow the face of a plate, film, or piece of sensitive paper to come into contact with the wrapping paper. Although certain specially-prepared or treated papers, such as those used inside roll films, film packs, and for the individual packing of X-ray plates and films, are without effect on the emulsion, it is often found that after prolonged contact with an ordinary paper, such as that used round plates and films, the structure of the paper appears on the image after development.

283. Loading Plate Holders. Plate holders or dark slides should always be loaded in weak, non-actinic light,[1] and preferably in absolute darkness.[2] It is desirable to practise filling the plate holders first in full daylight, using waste negatives for this purpose, and then, having become familiar with the operation, to get accustomed to working in complete darkness.[3]

[1] In a dark-room where the light cannot be put out nor turned down, the operator should stand in such a position that the sensitive materials are handled in the shadow of his body.

[2] Although it is not desirable that tobacco ash should be allowed to fall on plates or films at any time during their manipulation, there is no risk whatever of veiling or fogging from the *light of a cigarette*, however sensitive the emulsion may be. The use of a pipe provided with a perforated cover, which may be completely closed, may be regarded by those who smoke as an unnecessary precaution.

[3] By means of a *changing-bag*, dark slides or plate holders may be loaded in full daylight when the operator has become expert in loading in darkness. This is a bag made of several thicknesses of opaque fabric provided with two sleeves, through which the arms are inserted. The ends of these sleeves are held tightly in place on the arms by elastic bands, and the sleeves of the coat are turned down over them to form light-tight shields. An opening, closed by two flaps of fabric held by snap-fasteners, enables the operator to insert the plate holders, the box of plates, and an empty box for the exposed plates, when these are too large to be inserted through the sleeves of the changing bag. When absolutely necessary, and provided that a dark place can be found, plate holders may be loaded under an overcoat, the arms being inserted through the sleeves from the wrists.

Sensitive materials should always be held by the edges. At the most the fingers should only come into contact with either the face or back of a plate or film to the extent of about three-sixteenths of an inch from the edge in large sizes. Wherever the fingers touch the emulsion, even when they seem quite clean and dry, a minute quantity of greasy matter is deposited on the gelatine. This prevents the developer from penetrating the film, and produces a light finger-mark on a dark ground in the developed image.[1] Similar marks are sometimes found on a plate or film which has been packed with its sensitive surface in contact with the back of a plate on which there are finger-marks. For this reason, when plates are re-packed after exposure, they should always be placed face to face.

In order to use stiff cut-film in dark-slides for plates it is possible, in small and medium sizes, to slip the film into a film holder securing it on three sides. This arrangement does not ensure the necessary flatness with films of large and very large sizes, and these are held with their back in contact with a rigid support (glass or sheet metal) coated with an adhesive varnish containing vinyl resins (M. Hagedorn and A. Jung, 1931) or rubber; if required, the film can be left on this support during development and further processing. The use of a blackened support can, in some measure, act as an anti-halation protective.

Except in special cases, the sensitive surface of a plate or film should always be turned towards the outside when filling a dark slide. Autochrome and similar plates are, of course, exceptions, as are also plates intentionally reversed in the plate-holder for the purpose of obtaining reversed negatives. In such cases it is necessary to adjust the camera extension when focussing to allow for the thickness of the glass.

Although plates are always packed in a uniform manner, uncertainty may occasionally arise with regard to which is the sensitive side. In order to ascertain this, a corner may be

[1] Dark finger marks on a light ground are the result of the emulsion having been touched by fingers impregnated with various chemicals, notably hyposulphite of soda.

touched cautiously, care being taken to touch the surface as near the edge as possible. The glass is smoother and feels colder than the emulsion. If still in doubt, moisten the thumb and first finger slightly and hold the corner of the plate between them. The sensitive emulsion will stick to the finger; the glass will not [1]. Since cut films are coated with gelatine on the rear side, these methods for recognizing the emulsion side cannot be adopted with them. In order to obtain the correct position, both during loading and dish development, a guiding mark is cut in one of the edges, so that when the film is held in such a position that the V-shaped cut is on the right at the top, the emulsion side of the film is then towards the operator.

Before loading is begun, the plate holders, which retain dust very easily, should be carefully cleaned.

The different types of plate holders and changing boxes vary considerably in the method of loading, so that in each case the instructions of the maker or the dealer should be consulted. [2] If the sheaths are fitted into the changing box in the wrong manner, they may jam or be damaged. The direction in which they are inserted, i.e. the position of the groove of the sheath relatively to the handle of the drawer, varies with different changing boxes. [3]

Often, when fitting a plate with sharp edges into a plate holder or metal dark slide, small pieces of glass are broken off. Loading should therefore never be carried out over the open box, or over plate holders which have already been filled. As the plate holders are loaded, place them with their faces towards the wall to protect them from light and dust.

284. Dusting the Sensitive Surfaces. With very few exceptions, the emulsion surface of plates and films is perfectly clean when purchased, for every precaution has been taken to this end in the factory, where the struggle against dust is often carried to greater extremes than in many surgical operating theatres, since only filtered air is allowed to enter the factory.

After development, however, a number of white spots (pinholes) are often found on the negative, each of which marks the shadow of a grain of dust which was present before exposure. In professional work these markings have to be carefully spotted out.

These dust particles are more frequently found on very fast plates, the surface of which is more matt than that of the slow emulsions and therefore much more liable to retain any dust which comes into contact with it.

The doubtful cleanliness of some dark-rooms, the use of fluffy paper for packing plates, chips of varnish, the fragments of glass produced in the loading of the dark slide or plate-holder, and the air eddies produced in a changing box by each operation of the drawer are sufficient to explain the presence of these dust particles, which are rarely found on roll films.

Attempts are often made to prevent these pinholes from forming by dusting the face of the plate before its insertion into the dark slide or sheath. These precautions, however, often make matters worse, especially if a hair brush or a velvet pad, which has been left lying about the room and is consequently full of dust, is used for the dusting.

The most effective method for preventing pinholes is to clean the dark-room, the plate-holders, and the changing-box very frequently, preferably with a vacuum cleaner, and also to follow closely the instructions given above for the loading of the plates. Where it is not possible to get rid of dust in this way, then a brush should be used, but it should be kept in a smooth-walled box when not in use and should be frequently cleaned by shaking and washing in alcohol. [1]

In any case, replace the slide of the holder very gently, holding the dark slide with the plate underneath, so that any dust on it is able to fall away.

285. Unloading the Dark Slides. If it is not possible to proceed with development as the plates are removed from the dark slides [2], they

[1] These statements may be incorrect in the case of plates on the back of which there is an anti-halation coating with a gelatine base.

[2] The fact that *roll film spools* may be loaded in daylight does not imply that it is necessary for this purpose to choose a well lighted place; still less a place where direct sunlight may reach the film. The paper wrapper should on no account be allowed to unroll loosely so that the light can penetrate into the sensitive surface. When loading film packs, care should be taken to avoid pressing the black paper slide or squeezing the pack from opposite sides, for, owing to the flexibility of the case, light may easily enter.

[3] Do not omit, after loading the changing box, to set the indicator so that, after closing the box, the indicator reads " o " (for no plates exposed) or " 1 " (first plate in position for exposure).

[1] For detaching the dust which has adhered to plates during the loading of a plate-holder or varnished metal dark slide, it is often sufficient to rap the holders smartly on the table.

[2] If development is carried out in vertical tanks with hangers, the handling of the sensitive materials can be reduced to a minimum if they are transferred to the

must be replaced in their original wrapping.[1] Plates and films should be packed face to face, and the packets should be firmly pressed down so as to prevent the emulsion faces from rubbing one against the other. Remember that the use of all common papers, with or without writing or printing, is liable to cause various defects (§ 200). The boxes should be sealed with a label stating explicitly that it contains exposed plates.[2]

When unloading dark-slides or the sheaths of a changing-box, avoid any contact with the emulsified surface and any rubbing of the glass edges against the rear partition as this might scratch the black varnish.[3]

286. Identification of Negatives. In all cases where a large number of negatives are dealt with, or where it is required to determine the effect of certain alterations in treatment on a number of negatives of the same subject, it is necessary to adopt a scheme of identification which will permit of no mistake.

The simplest method is to write a number with a soft pencil[4] (No. 1 or B) in one of the corners of the plate, taking care not to encroach on the picture part of the plate. If the inscription can be made during loading (where there are only a few negatives to identify) the pencil mark protects the emulsion from the action of light, so that after development the number appears light on a dark ground, even after the original pencil mark has been removed. If the inscription cannot be made until after the exposure, the number corresponding to the customer's order (in portrait studios and businesses catering for amateurs) or similar inscriptions should be made with a semi-hard pencil (No. 2 or F), so as to scratch the gelatine.

Various arrangements have been devised which will give each negative a permanent or provisional number more or less automatically, viz., (1) in a portrait studio, a number plate or a slate, with the number corresponding to the customer's order written upon it in chalk, can be placed in such a position that the image will appear in one of the corners of the negative; (2) one of the fixed holding pieces in each dark slide may be replaced by a metal plate perforated with the required figures; (3) the rebate of the sheath of a changing box may be notched or perforated on one of its longer sides, and, if necessary, a further mark, denoting the particular changing box, may be perforated in the shorter side.

In the developing and printing firms of any size,[1] the small length of film which extends beyond the last exposure is often used to record photographically the number of the order. The numbered receipt, made of very thin paper, is inserted, together with the end of the film, into a specially constructed printer, in which they are pressed tightly together by a shutter which automatically turns on the light used for the exposure as it is brought into position. The number may also be impressed on the film in greasy ink by means of a numbering machine. Finally, the method usually employed in cinematography could be employed, the films and order form being perforated with the required number by means of a machine similar to that used in banks for indicating the amount of a cheque.

hangers immediately on removal from the dark slide. The already loaded hangers may then be stored in a cardboard or wooden box of similar shape to the tank and fitted with a light-tight lid.

[1] In tropical regions, particularly if films are being used, the sensitive materials should be dried before repacking in order to prevent retrogression (i.e. fading) of the latent image, a phenomenon caused by the simultaneous action of heat and moisture. For this purpose the sensitive materials (long rolls of film should be wound into loose spirals) are placed in an air-tight box fitted with a double bottom containing pumice or asbestos, which has been impregnated with saturated solution of calcium chloride and dried over a fire. After leaving them for a day in this dry atmosphere the sensitive materials may then be repacked, and the packets, which have been dried also, are then enclosed in soldered or air-tight boxes.

[2] Certain plate boxes have a memorandum printed on the back where many useful notes may be made, e.g. a record of the various subjects photographed.

[3] In some cases when the air was exceptionally dry, it was noted when unloading the sheaths of a changing-box that a bluish light occurred at the moment that the bare glass back of the plate parted from the markedly arched back of the sheath, the light being the brighter the more rapidly the plate was pulled out of its sheath. Starting from the edge where the electrical discharge began, these plates had a shaded fog extending for a distance of 4 cm. (J. Boillot, 1933).

[4] Never use copying ink pencils, otherwise the inscriptions may either become discoloured during the various treatments or may spread on to the image.

[1] Special clips for development may be obtained, the tops of which are made to receive a numbered card.

CHAPTER XXIV

LIGHTING OF THE SUBJECT; DAYLIGHT; ARTIFICIAL LIGHT

287. Daylight. Daylight is not only of a very variable intensity, according to the geographical position, the season, time of day, and the atmospheric conditions, but its composition also varies over very wide limits, although it is always conventionally called " white light."

When referring to daylight, it is necessary to distinguish between direct sunlight and the light diffused by the blue or clouded sky.

On a clear day, the light consists almost exclusively of direct sunlight. A comparison of the intensity of illumination of a white surface exposed to direct sunlight and of a shadow thrown on this surface, in which case the shadow is illuminated only by the light diffused from the sky, shows that diffused light represents only about 5 per cent of the total light. This proportion increases as the sky becomes more clouded, until, when it is completely overcast, there is nothing but diffused light. Setting aside the effect of contrast, shadows are better lighted as the sky becomes less clear, that is, as the diffused light increases. In fact, the luminosity of the sky increases with the cloudiness and, in the case of large sunlit cumulus, can be as much as eight times the luminosity of ordinary blue sky. If, however, the sky becomes so cloudy that rain is imminent, then the luminosity diminishes, being approximately equal to that of blue sky.

288. Leaving aside for a moment the effect of atmospheric conditions, the intensity of sunlight depends essentially on the *height of the sun* above the horizon. Thus, in two widely separated places (a tropical and a temperate region), the light will have the same value at those times when the height of sun above the horizon is the same.[1] Thus, at Algiers on 15th January or 1st December, at 9.20 a.m. or 2.40 p.m. (local time), the intensity of sunlight will be the same as in Paris on the same days at 11.30 a.m. and at 12.30 p.m., or on 15th June at 6.20 a.m. and 5.40 p.m., for in all these cases the sun is 20° above the horizon.

The variations in intensity of the different groups of radiations constituting sunlight are not proportional. The ratio of the intensity of the violet radiations (i.e. the active intensity for ordinary photographic plates) to the intensity of the green radiations (i.e. the visual intensity) is much greater during the middle hours of the day than in either the morning or evening, when the sun becomes richer in red radiations as it sinks towards the horizon. While the visual intensity of sunlight[1] is usually greater in the afternoon than in the morning, yet, at equal times before and after midday the actinic intensities are approximately equal. As already stated (§ 220) these disproportions are even more marked as regards the intensity of the infra-red radiations that are photographically active.

At equal intensities, diffused light is always richer in violet radiations than direct sunlight, and the ratio increases as the sky becomes clearer. As the sun rises higher above the horizon, however, the composition of diffused light tends to approach that of sunlight.[2]

The chief conclusion to be drawn from these considerations is that, owing to the disproportionality between the visual and actinic intensities of light, any attempts to judge the actinic value merely from the visual intensity may be very misleading.

When considering, however, the action of

[1] Various empirical formulae connecting the intensity of light with the height of the sun have been proposed but none have furnished satisfactory results.

[1] More for curiosity than for any practical application, we reproduce below, from the work carried out by W. Abney (1875), the values of the visual intensity and actinic intensity relative to the light given by a candle, a source which is obviously very poor in photographically active radiations.

Height of sun	64°	30°	20°	10°	8°30′	Sunset
Visual intensity	5,600	4,700	3,300	2,000	1,400	140 candle metres
Actinic intensity	120,000	72,000	42,000	9,000	5,600	1·7 ,, ,,

[2] Apart from meteorological considerations, it is necessary to take into account the very appreciable loss of intensity due to the smoke over crowded areas, industrial towns, and those suburbs lying in the direction of the wind from the towns. It has been shown, for instance, that the light-intensity to the east and south-east at 7 miles from Paris falls 15 to 25 per cent when the wind blows in that direction.

light on orthochromatic plates instead of ordinary plates, this disproportionality is markedly less.

The intensity of the light from the *moon* is about 1/600,000th of that from the sun, assuming the two bodies to be at the same height above the horizon.[1]

289. In landscape photography, the only control the photographer has over the distribution of lighting is the choice of the most suitable moment for the exposure. This is done with due regard to the angle of the direct sunlight (time of day), and to the best proportions of diffused and direct light (choice of atmospheric conditions).

In portrait and still-life photography, various means of control, particularly in a well-fitted studio, are available. A large variety of effects, particularly with the aid of artificial lighting, may be obtained, by means of opaque blinds, diffusers of semi-transparent fabrics in the form of blinds or stretched over movable frames, and reflectors made of white opaque materials. A detailed description of the arrangements in a portrait studio can be readily obtained.[2] It may be stated in passing that at the time photography was first practised, when exposures, even in the most favourable cases, were counted in minutes, as much light as possible was admitted into the studios, with entire disregard of light and shade, by constructing them entirely of glass.[1] Owing to the considerable progress which has been made in the manufacture of sensitive materials and photographic lenses, it is possible nowadays to use an artist's studio, or even an ordinary room. The modelling in a face is much better rendered if the subject is illuminated only by a small area of glass window.

290. Artificial Light Sources. The three factors to be considered in an artificial lighting installation for photography are quantity, quality, and the degree of diffusion.

Source of light	Proportion per cent of the radiations			Relative efficiency towards emulsions		
	Red	Green	Blue-violet	Ordinary	Ortho-chromatic	Pan-chromatic
Sun	33·3	33·3	33·3	100	100	100
Petrol flame	80	18	2	18	28	42
Acetylene flame	62	32	6	30	44	52
Incandescent gas mantle	54	38	8	—	—	—
Low voltage arc, ordinary carbon	50	32	18	125	110	105
High ,, ,, (enclosed)	60	25	15	175	175	165
White flame carbon arc	40	35	25	255	235	215
Electric lamps: Carbon filament	65	30	5	24	33	43
Electric lamps: Tungsten vacuum	61	32	7	35	43	52
Electric lamps: Tungsten gas-filled	50	30	20	60	65	73
Mercury arc, glass tubes	nil	10	90	310	350	270

Quality depends essentially on the nature of the illuminant body. When this is a solid (particles of carbon in an illuminant flame, metal filament, crater of an arc, etc.) the spectrum of the emitted light comprises all the radiations in a wide interval (continuous spectrum). Compared with sunlight there is always a predominance of infra-red and red, the extent of the spectrum and its intensity in blue-violet and especially in ultra-violet being all the less, as the temperature of the incandescent body becomes lower.[2]

[1] Photographs taken with times of exposure inversely proportional to the intensity of the light would usually give similar results. When, however, photographs are taken in moonlight, it is generally desired to reproduce the special qualities of this lighting (absence of details in the shadows), so that it is sufficient to give an exposure about 100,000 times as great as that in sunlight, viz. about fifteen minutes at $F/8$ on a rapid emulsion (the same effects can often be obtained in daylight by giving an extremely short time of exposure). The moon, of course, should be kept out of the picture owing to its movement during the prolonged exposure.

[2] Herbert Lambert, *Studio Portrait Lighting* (Sir Isaac Pitman & Sons, Ltd., 1936).

[1] To permit the sitter to remain with open eyes facing the sun during an exposure of about a quarter of an hour, use was made about 1849 of blue glass for glazing the studios of portrait photographers. The use of such glass is no longer justified.

[2] The quality of a light source with a continuous spectrum is often indicated by its *colour temperature*, the temperature of an ideal radiator (black body) which would emit a radiation of the same visual composition, the said temperature being expressed in

As a rule, a much larger part of such an artificial light is effective if the photographs are taken on orthochromatic or, better, on panchromatic plates or films (§216 [2], footnote).

When the luminous body is a gas or a vapour made incandescent by heating to a very high temperature (the true electric arc) or rendered luminous by electrical discharges, the spectrum of the emitted light is discontinuous. Monoatomic (mercury, sodium, neon, helium, etc.) gases or vapours thus give a line spectrum on which in certain conditions (high pressure, high temperature) may be superposed a continuous spectrum, the other gases (hydrogen, carbonic gas, etc.) emitting a band spectrum.

The table on page 193, the data of which has been taken from various papers by Hübl, Ives, Jones, Hodgson, and Huse (1913 to 1916), shows the approximate compositions of various light-sources relative to sunlight, which is taken as the standard for comparison (on the assumption that sunlight may be divided into three equal parts of red, green, and blue-violet, the partial intensities in each case being brought to a total of 100). Their relative efficiency towards three types of sensitive emulsions is also given, and for this purpose the value of 100 is arbitrarily assigned to sunlight, the efficiency of the other sources being measured *for equal visual intensity*. [1]

Lamps usually cast light in all directions, so that their efficiency is notably increased by reflectors bringing back to the subject the light emitted in other directions. When high intensity lamps are used for living subjects they must be fitted with diffusers preventing dazzle. From these various points of view the efficiency of a lamp can be of very different values according to the apparatus in which it is used.[2]

With the exception of the light obtained by the combustion of magnesium, which we shall study later, we have only, from the point of view of practical application, to deal with the various forms of electric lighting.

291. Arc Lamps. The arc lamp has for some time been the only luminous source from which high intensities can be obtained, under advantangeous conditions with regard to the consumption of energy.[1] When used for the lighting of photographic subjects this source introduces the defect which is common to all point-sources. The shadows are so sharply defined, with no penumbra, that it is very difficult to obtain a good rendering of the form of the subject. To avoid this it is often necessary to point the arc away from the model and to use the reflected light from an adjustable diffuser, often in the shape of a large umbrella.

Since the introduction of the luminous tubes called mercury arcs, and the great improvements which have been made in the manufacture of incandescent lamps, arc lamps are much less used in portrait photography but still find employment in cinematograph and process studios, more particularly for wet-collodion photography. As these applications lie outside the scope of this book, we shall not attempt to describe the various types of arc lamps.[2] In the use of alternating or rectified current, the alternations of light and dark (two extinctions per " period " of the current), give rise to alternating bands of different density when exposure is made with a focal-plane shutter; in cinematography the effect may be insufficient exposure of some pictures.

292. Incandescent Lamps. The first notable use of the incandescent lamp for the illumination of sitters and originals to be photographed dates from 1913, when I. Langmuir first made lamps with a tungsten filament enclosed in an atmosphere of inert gas. In these half-watt (or gas-filled lamps), as they are called, the pressure exerted by the gas retards the volatilization of the metal, making it possible for very high

absolute or Kelvin degrees (Centigrade temperature increased by 273°).

In all cases where the spectrum of a source is continuous, a filter can be made, which, when placed in the path of a beam of natural light, will transmit light of the same composition; inversely, a suitable filter can be prepared which will alter the composition of artificial light to that of natural light. These corrections generally lead to a considerable loss of light.

[1] No account has been taken of ultra-violet radiations, even in the region transmitted by glass.

[2] When working with artificial daylight, the background is usually very much farther from the lamps than the subject. If the background is not lit by auxiliary lamps, it must be chosen of very light tint to avoid exaggerating the influence of the law of the square of distances (§ 13).

[1] Light of very different quality may be obtained, when employing arc lamps burning freely in the air, by the use of different carbons, according to the nature of the metallic salt with which the cores of the carbons are impregnated. Whitish or yellow-flame carbons are the most efficient for exposures on panchromatic plates.

[2] A modification of the electric arc can be used in two ways to obtain the instantaneous illumination employed in the study of extremely rapid motion (projectiles, etc.). The spark obtained between two aluminium electrodes, across which a condenser is discharged, gives a light more intense than the sun and of less than one millionth of a second duration.

temperatures (exceeding 2,500° C.) to be reached, at which the light emitted approximates very closely in composition to that of the best arc lamps. Very high intensities (up to 30,000 watts) have been attained, exceeding those of the most powerful arc lamps, which can now be replaced for nearly every purpose by the new lamps.

The luminous intensity and the photographic efficiency of a given lamp increase as the filament is heated to a higher temperature, which is effected by running the lamp at a higher voltage. Such over-running is limited by the increasingly rapid volatilization of the incandescent metal, causing rupture at the weakest point of the filament.

The rating adopted for ordinary lamps for domestic and public lighting gives them an average life of 1,000 hours (which may, however, be considerably shortened by fluctuations in the supply voltage[1]). To increase the efficiency recourse was first had (Trevor and Salt, 1914) to overrunning, during the actual exposure, lamps of a lower voltage than that of the mains (for instance, 80 volt lamps on 110 volt mains) by short-circuiting a resistance (or transformer), the switch being often actuated simultaneously with the shutter of the photographic camera.

The following table, prepared from measurements by Luckiesh (1915) and L. Lobel (1921), shows approximately the variations in the visual intensity and actinic intensity (towards an ordinary emulsion) of gas-filled metal-filament lamps when over-run or under-run, the value of 100 being arbitrarily assigned to the intensity of the lamp in question when working under conditions such that the lamp has a life of 1,000 hours.[1]

	Visual intensity	Actinic intensity
Under-run, 17% . . .	70	55
Normal voltage . . .	100	100
Over-run, 17% . . .	130	200
,, 37% . . .	190	325

With orthochromatic, and especially with panchromatic, emulsions, the changes are not so marked, since the actinic and visual power of the lamp approximate more closely.

Subsequently, makers of incandescent lamps placed on the market special lamps for photography and cinematography, specially devised to withstand overrunning, and which must not be worked beyond the stated rate. These lamps are of three types, corresponding respectively to continuous use for 100 hours or 10 hours at the maximum rate, or to intermittent use of an average total duration of 2 hours at the said rate. While preparations are being made these lamps must be under-run.[2] In the table below, the last column shows the voltage at which lamps supplied for 110 volts must be run so as to have a life of about 1,000 hours, and the

Life at maximum rate	Normal use	Working	Lumens per watt[3]	Approximate voltage for life of 1,000 hours
1,000 hours	Domestic or public lighting . .	Continuous	10–15	110
100 ,,	Cinema studios, projection . .	,,	20–22	80
8–10 ,,	Amateur cinematography . .	,,	25–30	70
2 ,,	Photography	Intermittent	32–36	64

[1] Owing to voltage fluctuations at different hours of the day and to the greater influence of voltage on actinicity than on illuminating power, it is well to have a voltmeter facing the operator.

In alternating or rectified current the alternations between light and dark (two extinctions per "period" of current) give rise, when a focal plane shutter is used, to bands alternately over-exposed and under-exposed, and, in cinematography, to under-exposure in certain images.

Both these remarks are applicable also to all light sources using electrical energy.

[1] The results differ considerably according to the very different qualities of lamps of various makes. Some lamps, especially those of low power, will withstand over-running, whilst others are speedily rendered useless.

[2] The electrical resistance of a cold filament being only a small fraction (1/15th approx.) of that of the same filament at its normal working temperature, it is advised, when using a relatively great total light power, to put in during lighting a resistance (or transformer) until the filament is red, when the preparatory voltage is switched on, and then the maximum voltage.

[3] A source of an intensity of 1 candle radiates a total of 12·6 lumens. The efficiency increases with the power of the lamp.

resistance put in must reduce the voltage to about that shown in order not to shorten appreciably the life at the maximum rate.

Rather than use a small number of lamps of high intensity,[1] which give very little diffusion,[2] even by using matt or "opal" bulbs, it is sometimes preferable to employ a battery of from 12 to 20 lamps, of smaller intensity, mounted on a frame 6 ft. by 4 ft., behind a diffusing material. The area of illumination can then be adjusted by lighting a suitable number of lamps.

293. At a time when portrait photographers and cinematographers used only ordinary or slightly orthochromatic emulsions and long life lamps emitting chiefly rays inactive as regards these emulsions, they were led to use high light intensities. In order then to avoid the discomfort and fatigue due to heat and glare, it was suggested by Luckiesh to use blue bulbs made of a glass absorbing the greater part of the inactive rays. Dealers, who probably had more knowledge of electrical than of photographic technique, have seriously affirmed that these lamps, emitting blue light, furnished a more actinic light than the white lamps of the same consumption, and these statements have been received with enthusiasm by photographers, who have tinted the glass in their studios blue in order to increase the actinic value of the light!

It cannot be repeated too often that the action of a filter is not to tint the light as a skein of wool is dyed by a coloured solution, but to cut out a certain variable fraction of the incident radiations, so that it is obviously impossible to improve the actinic value in this manner.

Not only is there a loss, from the point of view of the exposure necessary, but this loss becomes considerable when panchromatic emulsions are used, for, having absorbed the red by the blue filter incorporated in the lamp, it is then necessary to use a yellow filter, in order to absorb in its turn the excess of blue and violet which now predominate. The marked advantage which the incandescent lamp possesses for the photography of coloured objects is therefore lost.

294. Mercury-vapour Lamps. These lamps, which were invented in 1901 by P. C. Hewitt, could only be used at first with direct current, and could not be started from a distance, because they had to be tilted in order to strike the arc. Owing to the many improvements which have been made in their manufacture, special lamps can now be supplied, which run on alternating current and are lighted merely by closing a switch.[1] They are generally in the form of fairly thick glass tubes about 4 ft. long and an inch in diameter. The whole length of the tube emits a bluish-green light composed of separate spectral lines ranging from yellow to ultra-violet, the green line possessing the highest visual intensity. Ordinary emulsions are of course insensitive to this radiation, since their sensitivity is mainly confined to the violet and ultra-violet regions. The very high actinic value of these lamps towards ordinary emulsions allows of an appreciable economy in electrical energy, besides which they give off less heat than any other source of light, and, owing to the low visual intensity from the luminous tube, all glare is avoided. Unfortunately, this type of lamp cannot be used for orthochromatic photography, for the use of a yellow filter, even of very low absorption, causes a deplorable fall in the efficiency of the lamp.

To correct the disagreeable effect of this green light, which gives people a peculiar ghostly appearance, the only effective means is the addition of lamps emitting mainly red light, banks of under-run incandescent lamps, or neon tubes,[2] the respective intensities of the two

[1] It is not wise to wait until the luminosity of the lamps has fallen markedly, owing to the metallic deposit on the inside of the globe, before renewing them, for their actinic value will have been reduced some time previously by the yellow coloured film which is first formed. In an installation where all the lamps are not used at the same time, they should be frequently changed round to prevent those which are used most from being worn out. Some high power lamps contain a few grains of tungsten which, when shaken, clean the interior surface of the bulb. The efficiency of lamps is considerably lowered by accumulated dust on the bulbs, reflectors, and diffusers.

[2] Incandescent lamps are often used in small projectors (spot lights) to supplement the lighting given by ordinary daylight or artificial light. This is exemplified in the lighting effects obtained by the American cinematographers, in which the heroine often appears to be surrounded by a halo of cotton wool.

[1] In a cold room lighting up is often difficult as the arc will not strike unless the tube contains mercury vapour at a sufficient pressure.

[2] Neon lamps, used with a comparatively low voltage, emit mainly a spectrum of red rays; an increase in voltage progressively increases the intensity of the violet rays.

For special purposes use is made of the discharge of condensers at several thousand volts in neon or mercury tubes, the duration of the flash being somewhat like one millionth of a second. These discharges, which are of considerable actinic power (A. and L. Séguin, 1930), can follow each other at any desired frequency, either equal to that of a periodic occurrence ("time" exposures of machinery parts in very rapid motion by

lights being adjusted to suit the chromatic sensitivity of the emulsions used.

In the cinematograph industry, where special make-up and appropriate choice of the colouring in the costumes and decorations render the use of orthochromatic materials unnecessary, these lamps were used to a large extent, more especially for the *general lighting*, obtained from a number of frames arranged horizontally above the scene, each frame carrying from four to eight tubes. The *contrast lighting* (for the modelling of reliefs) was supplied by batteries of lamps mounted vertically on trolleys.

In a portrait studio, two tubes mounted on movable or fixed platforms, for general lighting, and another arranged so that it is movable in all directions, can be made to give a great variety of lighting effects. The numbers of lamps can be reduced to two for purposes of economy, or increased if it is desired to work with very short times of exposure.

Numerous attempts have been made to increase the efficiency of mercury lamps by increasing the pressure and the temperature of the mercury vapour inside the lamp and decreasing its volume in order to increase brilliancy. The bulb must then be made of quartz and, therefore, transmits with considerable intensity ultra-violet rays of short wave-length. The bulb, unless protected by an envelope of rather thick glass to absorb these rays, would, even in a very short time, cause grave injury to eyesight.[1]

By way of example we will indicate the chief characteristics of two very high pressure lamps (C. Bol, 1935), one cooled by water circulating in a jacket and the other air-cooled, both for alternating current with auto-transformer and self-induction coil. The emitted light is at first formed only of mercury lines, somewhat broadened, on which there is gradually superimposed a continuous spectrum that becomes more and more intense, the light being then almost white, with green predominant. These lamps can be re-lit only after complete cooling, and this restricts their photographic uses.

Consumption in watts	600	75
Voltage	500	420
Pressure, kg. per sq. cm.	150	30
Dimensions of the quartz tube	2 × 10 mm.	2 × 10 mm.
Cooling	water	air
Efficiency, lumens/watt	50–60	40
Luminosity, candles/sq. cm.	40,000	1,100
Time required to reach normal working	15 min.	5 min.

295. Illumination of Flat Originals. While the distribution of the lighting over a person, object, or group of objects is almost entirely a matter of taste, and is therefore outside the scope of this work, the illumination of flat originals, for the purposes of photographic reproduction, is controlled by definite rules, which have been described in full in text-books on photo-mechanical reproduction. We shall just briefly outline the essential facts.

The light-sources should be preferably mercury arc lamps for all originals in black and white, and incandescent[1] lamps for all colour work.

The desired uniformity of illumination cannot be obtained with a single lamp, unless it is moved, after appropriate fractions of the exposures, successively to the positions which are later recommended for several separate sources of light.

The positions chosen for the lamps should be such that, in the first place, the whole area of the original is uniformly illuminated,[2] and, secondly, that no reflections of the lamp appear on the original, a condition which is much more readily fulfilled if a lens of long focal length is employed.

Even illumination of the original can be obtained by using four incandescent lamps or two mercury tubes.

Suppose it is necessary to illuminate a square by means of four lamps, which roughly may be assumed to be point-sources. By placing a lamp opposite each corner of the square at a distance equal to half the diagonal of the square, or slightly nearer, even illumination is obtained to within 4 per cent, the mean value being about 1·45, the illumination from a single lamp, falling on the original at a point directly opposite it, being represented by 1.

The avoidance of reflections generally neces-

means of a series of flashes) or at a slightly higher speed (stroboscopic cinematography for slow motion of high speed machines).

[1] No photographic use should therefore be made of mercury lamps with quartz bulbs specially made for other uses.

[1] Lamps with frosted globes are unsuitable for this work.

[2] *Absolute* uniformity is neither necessary nor even desirable. In fact, there is an advantage in increasing slightly the illumination along the edges of the subject in order to compensate for the loss of light at the edges of the field formed by the lens.

sitates the illumination of a square much larger than that required by the largest dimension of the original, unless, of course, the latter is of very narrow shape. Rather than draw up a number of complicated rules, we would recommend the following method. Place a mirror or a piece of glass flat on the original, and then, with the eye close to the lens, make sure that no reflection from the lamps can be seen.

If the original is to be illuminated by tubes, the length of the tube should exceed the greatest dimension of the original, the difference in length being greater the farther the tube is removed. If, for example, lamps 4 ft. in length are placed at a distance of 18 in. from the original, the illumination, in the direction parallel to the lamps, will only be uniform over a distance of about 2 ft. To obtain uniform illumination at right angles to the lamps, the latter should be separated by a distance of about 1·7 times that from the original.

296. Illumination by Magnesium. The combustion of metallic magnesium, in the form of thin ribbon, has been used since 1850 (Bunsen and Roscoe) to obtain a very actinic intense light. About 1865 Traill Taylor experimented with an explosive mixture allowing of the almost instantaneous combustion of an appreciable weight of magnesium shreds, but it was not until twenty years later that magnesium in the form of fine powder was first brought on to the market. At first the powder was ignited by blowing it through a very hot flame (Armstrong, 1888), but later pyrotechnic mixtures, similar to the present-day flash powders, became obtainable with either rapid or slow combustion, the idea being derived, no doubt, from the earlier work of Traill Taylor. In certain of the mixtures the magnesium has now been replaced either partly or entirely by other metals, or by combustible metallic compounds.

The table given below, taken from sensitometric experiments (J. M. Eder, 1890; E. Huse, 1923), shows in visual candle-seconds (white light) the actinic values of 1 grm. of magnesium, burnt in three different forms, using three types of sensitive emulsion.[1]

The pyrotechnic mixture given is similar to the type now generally in use (magnesium metal and potassium perchlorate). The use of calcium, strontium, and barium salts as combustion agents allows the activity towards orthochromatic and panchromatic plates to be increased, by correcting for the excess of violet and ultra-violet, which is due, in an ordinary flash-powder, to the very high temperature of combustion.

Combustion of 1 grm. magnesium	Actinic values in visual candle-seconds		
	Ordinary	Ortho-chromatic	Pan-chromatic
In ribbon . .	2,850	4,800	5,600
Pure powder .	2,300	4,600	7,700
Flash powder (approx.) . .	3,000	1,900	2,200

The combustion of magnesium (or of the metals which can be substituted for it) is necessarily accompanied by the formation of a corresponding amount of oxide (magnesia,[1] in the case of magnesium), together with, in the case of flash powders, the solid residue of the substance used as a combustion[2] agent. A part of this solid residue is deposited immediately, while the remainder, which is in a very finely divided condition, as smoke, is carried upwards by the current of warm gas, and only deposits slowly.

297. Burning of Magnesium in Ribbon or in Powder. Magnesium ribbon, usually about $\frac{1}{8}$ in. wide, $\frac{1}{130}$ in. thick, and weighing about 10 gr. per yard,[3] can only be used for inanimate objects, firstly, owing to the time required for the combustion of a sufficient weight, and secondly because the very strong glare causes sitters to close their eyes. It can be burnt either in a lamp with a clockwork movement, which automatically releases the ribbon at the same speed as the combustion, in a small lamp where the ribbon is pushed out by hand, or as a kind of torch made by twisting round a piece of fine iron wire two or three strands of ribbon, the

[1] It is necessary to point out that an increase in the quantity burnt, especially with flash powders, does not increase the actinic value proportionally, since the central regions of an incandescent mass add very little to the main effect produced by the outside layers.

[1] In whatever manner the magnesium (or other metals used for the same purpose) is burned, it must be remembered that any oxide which may be deposited on the operator's clothes or hair, if allowed to fall on a sensitive plate or film during development, will cause black spots, due to the local increase in alkalinity of the bath.

[2] The name "combustion agent" is applied to all substances which are capable of supplying the oxygen necessary for the combustion.

[3] Just recently extra thin magnesium ribbon has been put on the market, being about $\frac{1}{12}$ in. by $\frac{1}{300}$ in. and weighing about 4 gr. per yard.

whole being held firmly in a horizontal[1] position at the end of an iron clamp.

Owing to hardness of the shadows produced by a point-source, it is necessary to keep the lamp or torch moving during the exposure, or to burn several torches in different positions. The working conditions should be arranged, however, so that the lighting predominates in one direction, taking care that the shadows from the auxiliary positions of the light-source cannot be seen. The operator should protect his eyes by means of a piece of deep red glass or film, otherwise he will be completely dazzled for some minutes and will be unable to look after the combustion of the metal.

The table given below shows the length of magnesium ribbon required, according to the distance of the light from the subject, there being no other effective lighting. The photograph is assumed to be taken on a plate of the rapid ordinary type, with lens working at $F/8$. It should be pointed out that in order to obtain even illumination the light should be produced at a distance much greater than the width of the subject.

The ribbon may be ignited with a match or with a spirit flame, but the ends of the magnesium should first be cleaned with glass paper or emery cloth in order to remove the magnesium oxide which would prevent the ignition. Magnesium ribbon should always be kept in a dry place.

By projecting very finely powdered magnesium (to pass sieve No. 120) into a spirit flame, a flash lasting from one-fifth to one-tenth of a second can be obtained. A continuous flame can be obtained by using an ordinary powder bottle sprayer or various types of lamps, the manufacture of which has been discontinued since the advent of the flash powders. It is necessary to emphasize the fact that these lamps, particularly those fitted with powder reservoirs, when used either for single or continuous illumination, must only be charged with pure magnesium powder, not with any other mixtures (flash powders), which will almost certainly cause a serious explosion in the lamp or reservoir.

Distance from the subject in feet	1½	3	4½	6	7·5	9	12	15	30	45
Weight to be burnt in grains	½	2	4	8	12	18	30	50	200	600
Corresponding lengths in feet	·15 (= 2 in.)	·60 (= 8 in.)	1·3 (= 16 in.)	2½	3½	5½	10	15	60	135

Nature and form of the metal	Thickness or diameter (mm.)	Weight of metal (milligram)	Bulb diameter (mm.)	Maximum luminosity (lumens)	Duration of flash (sec.)	Lag in lighting[1] (sec.)
Aluminium foil	0·0004	30	60	2,000,000	0·05	0·01
		60	75	4,000,000	0·06	0·008
		240	110	10,000,000	0·10	0·017
Magnesium wire	0·035	27	35	1,000,000	0·02	0·03
		55	70	2,000,000	0·02	0·03

298. Combustion of Magnesium or Aluminium Wire or Foil in a Bulb of Oxygen. A recent type of lamp (J. Ostermeier, 1929) gives a single flash of very great actinicity (colour temperature 3,500° K. approx.) and of very short duration

[1]If the ribbon is burnt in a vertical position, the metal often melts, under the influence of the great heat of combustion, before being burnt and falls to the floor in incandescent particles, causing the ribbon to be extinguished. In any case, care should be taken against falling incandescent particles by covering the floor or carpet with several thicknesses of old newspapers placed under the point at which the magnesium is to be burned.

[1]The lag in lighting, which it is important to know for synchronization of the flash with the period of full aperture of the shutter, varies greatly with the voltage of the current used. It was found, with lamps burning aluminium foil, that this lag passed from 0·10 second (lighting with 6 volts) to 0·01 second (lighting with 110 volts). To avoid these variations it has been suggested that mechanical synchronization be replaced by photoelectric control of the shutter by the light of the flash at its beginning, using a photo-voltaic cell placed at the back of the reflector. It must be borne in mind that no instantaneous flash is compatible with the use of a focal plane shutter.

by burning crumpled aluminium foil or magnesium (alloyed with aluminium) wire in pure rarefied oxygen[1] within a sealed bulb, i.e. without external smoke. For the purpose of electrical ignition by all currents from 2 to 220 volts,[2] the bulb is fitted with a cap like that of an incandescent lamp. Ignition is effected by explosion of a wire acting as a lighter. This lighting wire is sometimes coated with metallic salts (such as sodium nitride) to increase the proportion of yellow and red rays and thus improve colour rendering.

The table shown gives the average characteristics of some of these lamps according to the measurements of W. E. Forsythe and M. A. Easley (1936) on one hand, and of M. van Liempt and J. A. de Vriend (1935) on the other.

In Press photography the need for compact and very portable apparatus has led to the mounting of the lamp or lamps[3] on the camera, which is obviously the worst position aesthetically, as all shadow modelling is thereby suppressed.

Some attempts have been made to use in the same way flashlamps containing only a gaseous mixture (carbon bisulphide and nitric oxide).

299. Flash Powders. These powders invariably consist of a mixture of magnesium (or one of its substitutes)[4] with one or a combination of oxidizing substances, which supply the oxygen necessary for the combustion immediately the ignition is started by the application of heat to any part of the mixture.

[1] The pressure is about 1/5th atmosphere. Overpressure, due to combustion in a non-rarefied atmosphere (penetration of air through a crack), would cause the bulb to burst. For this reason some of these lamps contain an indicator the change of colour of which, due to moisture, indicates that the lamp is no longer fit for use.

[2] As ignition by current from the mains might burn out the house fuses, the cap of the bulb often contains a fuse contact breaker. To ascertain, without danger of setting off the flash prematurely, whether the lighting wire is intact, the flash bulb may be placed momentarily in circuit with an electric pocket-lamp worked by a *single* dry battery cell (1·5 volt), the filament of the pocket-lamp being then caused to glow weakly.

[3] When such lamps are placed side by side, the separation between the bulbs being not more than 1 cm. (2/5 in.), the firing of one of the lamps may spread progressively to the others, the total duration of illumination being then longer (the lamp first fired being extinguished while the third is lighting up). This propagation, which occurs especially with aluminium foil flash-bulbs, seems due to the heating of the metal by a considerable emission of infra-red by the incandescent alumina.

[4] For instance, use has been made of zirconium hydride giving less smoke at the same actinic power.

The photographer who has no knowledge of chemistry or pyrotechnics should never attempt to prepare flash powders. The majority of the formulae for these preparations, which have been copied in many cases from one book to another, are really formulae for dangerous explosives, and it is not unlikely that any such experiments may lead to a serious accident, sometimes fatal. Even mixtures which are said to be fairly safe may prove to be dangerous if, instead of using substances of known purity, as the manufacturers do, commercial products of unknown composition are used. For instance, perchlorates often contain as impurity a small amount of chlorate, which for other purposes is quite harmless. While flash powders containing pure perchlorate are perfectly safe, any which contain chlorate are very dangerous to handle since they are liable to explode through shock or by friction against a hard substance. It must be thoroughly understood, therefore, that the various formulae given later are included for use by competent people only, knowing the precautions necessary for the handling of such mixtures.[1]

If there is any doubt about the safety of a flash powder,[2] all the precautions necessary with an explosive should be taken while handling it.

A certain number of flash powders are sold with their constituents separated, to facilitate transport. In mixing powders of this type, care should be taken to avoid shock or friction against hard substances. Sufficient homogeneity may be obtained by gently shaking the powder, preferably in a cardboard box.

Flash powders should never be stored in glass-stoppered bottles, for the friction between the stopper and a small quantity of the powder may be quite sufficient to cause the explosion of the bottle and its contents.

300. Constituents of Flash Powders. Flash powders should contain no poisonous substances,

[1] In France the commercial preparation of these mixtures cannot be undertaken without previous registration. (Dangerous establishment of the first class.) Their preparation, even for personal use or in small quantities, is not permitted in an inhabited house except by the authority of the police. They may not be stocked for sale without police authorization. (Paris Police Instructions, 16th May, 1904.)

[2] Before using a flash powder, which may be entirely satisfactory from all other points of view, we would recommend that tests be carried out to ascertain whether it is susceptible to shock or friction. This should be done, *using only* 1½ *gr.*, on an anvil (holding the hammer at arm's-length) or in a mortar, using a long-handled pestle.

nor any substances which give off poisonous fumes, such as chromates.

There should be no deliquescent substance present, which will absorb the moisture from the air and in this manner prevent or delay the combustion. All substances which attack magnesium, or which are liable to cause spontaneous combustion of the mixture (this sometimes occurs when cadmium nitrate is used), should be excluded. Products which make the mixture susceptible to shock, as an example of which potassium chlorate may be cited, should never be added. It is desirable to choose those combustion agents which give the least solid residue.[1] Lastly, the constituents should be in a sufficiently finely divided state to permit of rapid combustion, without, however, using the magnesium in the form of too fine a powder, in which condition it is rapidly oxidized and may, in certain cases, cause the spontaneous combustion of the mixture.

One of the best magnesium flash powders is obtained from a mixture of magnesium and perchlorate of potash, which are powdered separately before mixing, the proportions being then chosen according to the desired result. The most rapid combustion ($\frac{1}{150}$th of a second for a charge of from 15 to 30 gr.) is obtained with equal quantities of the two constituents, but the intensity of the light is improved if the proportion of perchlorate is reduced. A mixture of 30 gr. magnesium with 15 gr. of perchlorate (time of combustion about $\frac{1}{25}$th of a second for the same charge as above) is to be preferred because of its higher actinic value, in all cases where extremely rapid combustion is not necessary.

Excellent flash powders, generally with slower combustion for the same actinic value, can be prepared by replacing the magnesium by aluminium (not the impalpable aluminium powder used for metal paints), the most suitable combustion agent in this case being either potassium or barium permanganate (15 gr. of metal to 30 gr. of permanganate).

[1] The percentage of smoke may be defined as the ratio between: (*a*) the difference between the initial weight of the charge and the weight of the residue, and (*b*) the weight of the charge. Many suggestions have been made for reducing the proportion of the smoke. These include the use as combustion agents either of ammonium salts, which leave no solid residue, or of substances giving a very spongy residue, which occludes the magnesium oxide, thereby preventing its escape (barium dioxide), or, finally, the addition of inert substances, which act in an exactly similar manner (various silicates).

Powders of exceedingly high actinic power and burning with a very small percentage of smoke, have been prepared by mixing cerium, zirconium, and thorium (much more costly metals than magnesium) with their respective perchlorates.

301. Testing of Flash Lamps and Flash Powders. Tests of flash lamps and flash powders should be designed to indicate actinic value and also speed of combustion. It may also be useful in the case of powders to determine the volume of the flash, which will give some idea of the diffusion of the light, and, if necessary, of the required dimensions of smoke traps or diffusers. Various methods have been outlined for these tests by A. Londe (1901), J. I. Crabtree (1916), and others.

One of the simplest methods for the determination of the actinic value is to expose to the flash one half of a plate placed behind an even neutral grey density (transmitting about one-thousandth of the incident intensity). The other half is then exposed behind a sensitometric wedge (a neutral grey filter of gradually increasing density) at a known distance from a light-source of known intensity. Having developed the two halves of the plate together, a comparison is then made of the exposures necessary to produce equal density on each half, and from this comparison the actinic value of the flash can be expressed in terms of that of the known light-source.

In order to determine the duration of the combustion, and, at the same time, the variation in actinic intensity at various stages of the combustion, the powder is ignited behind an opal glass, and the flash photographed with a high frequency cinematograph camera. The exactness of the measurement increases with the speed at which the camera is run, provided the frequency of the images is accurately known. From a photometric comparison of the densities registered on the various sections of the film with a scale of densities made on the same film under known conditions, the actinic value of the flash at the moment of registration of each image can be determined.[1]

[1] It is also possible to run a band of sensitive paper or film at a constant speed past a narrow slit covered with a neutral grey wedge of known gradation. In this manner a curve showing the variation in intensity at different times during the combustion will be impressed on the paper or film. Use has also been made of various photo-electric methods, the current received by a photo-electric cell being led, after amplification, to a recording galvanometer.

The dimensions of the flash may be determined by photographing it behind a screen (formed of squares of known size) against a black background. By placing a mirror at an angle of 45° close to the flash, two images from directions at right angles to one another (on somewhat different scales) may be obtained simultaneously.

302. Practical Uses of Flashes. It is proposed to deal more especially with the application to portraiture, for, as we have already seen, in the absence of moving subjects, a much better actinic value is obtained if the magnesium is burned in the form of ribbon.[1]

The frequent unskilful use of flashes leads sometimes to the belief that it invariably results in bewildered expressions, or closed eyes, and, in the majority of cases, complete absence of modelling. Moreover, when using powders, the danger from fire and the inconvenience of the smoke are frequently overestimated, whereas by taking a few simple precautions both may be easily avoided.

The dilation of the pupils, so commonly found in portraits taken by beginners, occurs through taking the photograph in a dark or poorly-lighted room. In accommodating themselves to the bad light, the pupils become very much enlarged and give, in consequence, an expression of fear to the faces of the sitters. This expression is not caused by the flash, but is a faithful representation of the strained look which everyone acquires in semi-darkness. When working at night, the lights should not be turned out, except, of course, such of them as come within the field of the lens. This obviously makes it necessary to cap the lens until just before the ignition of the powder, and to re-cap it immediately the flash has finished. If no other light is available, the beam of light from an ordinary pocket flash lamp may be turned on to the eyes of the sitter, in order to bring the pupils to their normal size.

Another difficulty which arises with the use of a flash is the closing of the sitter's eyelids due to the dazzle of the light, but this occurs only when the flash has been of too long a duration. A study which should be of great value to the portrait photographer has been made by J. I. Crabtree (of the Eastman Laboratories) of the reflex movements of the eyelids. In Fig. 164 is reproduced a cinematograph film, which was taken at the rate of 32 images per second (twice the normal speed) in a lighted room, just at the moment of ignition of a charge of flash powder, which lasted for about one-sixteenth of a second (corresponding to the two over-exposed images). It will be seen that the eyelids have not begun to close until after the flash has finished, and then the right eye, which was nearer the flash, closed first, to re-open about one-sixth of a second later.[1] If, therefore, a flash not exceeding one-sixteenth of a second is used, the only risk of taking the model with the eyes closed is the coincidence of the flash with a blinking of the eyelids, a coincidence which might occur just as easily during the release of the shutter when taking a photograph by daylight.

From among the different methods which may be used to ignite

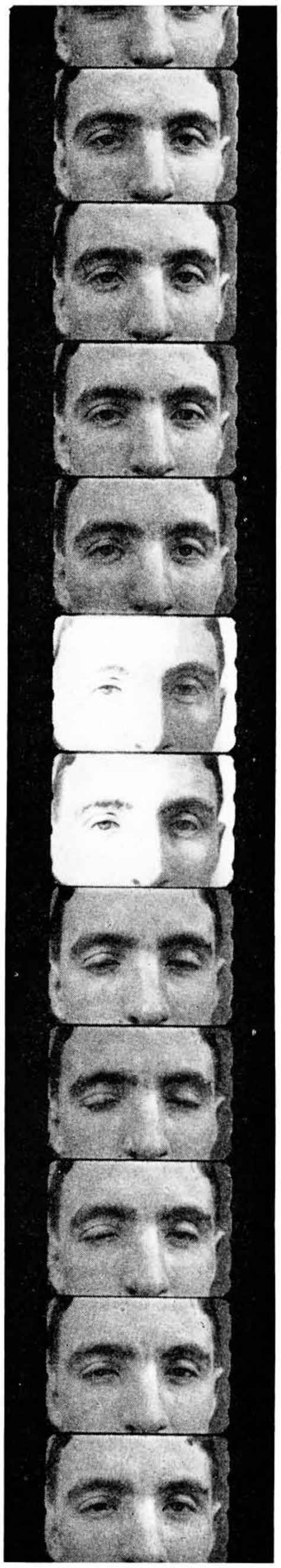

FIG. 164. MOVEMENTS OF EYES DURING FLASH-LIGHT EXPOSURE

[1] In absence of moving objects, it is also possible to use the slow-combustion flash-cartridges, which resemble, to a certain extent, bengal fire. Light cartridges, fitted with a parachute, have been marketed in the U.S.A. Thrown to a height of 200 ft. by means of a special pistol, they ignite after a few seconds, and for 1 to 2 minutes give a light of about 1,000,000 candles which suffices for photography within a circle of 700 ft. in open ground. Several air forces have used such cartridges, of much greater power, for aerial photography by night.

[1] This circumstance prohibits the use of slow-combustion powders for portraiture even if the exposure is reduced by a shutter to the desired duration.

the charge, it is preferable to choose those which do not attract the attention of the sitter, avoiding, therefore, the use of a fuse.

303. The speed of combustion of a powder depends primarily on its composition and its state of division, but it is also controlled to a certain extent by its state of preservation, the weight burnt in a single charge, and by the distribution at the moment of ignition.

Powder which has been kept in a damp place will only ignite very slowly, and will give a low actinic value, owing to the fact that the magnesium powder has been oxidized on the surface or that the combustion agent is damp.

The time of combustion always increases with the size of the charge, hence the need for extremely quick-burning powders when dealing with large groups (banquet halls, etc.), which require large charges. Crabtree has found that with a charge of 75 gr., as compared with one of 220 gr., using a very rapid powder, the time of duration of the flash increases from 9 to 14 hundredths of a second.

Combustion is always much more rapid if the powder is heaped up in a small cup than when spread out along a channel, in which case the time of the flash may be as much as doubled. This drawback, however, is compensated by a much better completeness of combustion, which allows of the use of a smaller quantity of powder.

304. Numerous methods are available for the ignition of the flash powder, which may be arranged in a heap on a metal tray, or placed along a very shallow channel. In the latter case a bit of gun-cotton, or a strip of paper treated with potassium nitrate (touch paper), is first inserted, and the projecting end is then lighted with a taper held at the end of a stick (the hands should never be placed near the powder at the moment of ignition, unless covered with leather gloves).[1]

These methods of ignition are only satisfactory when the flash is used in conjunction with daylight or artificial light, which by themselves almost supply the necessary illumination. When the magnesium flash is the only source of light, it is necessary to use at least two charges, which must be of unequal strength, one of them being used to soften the shadows of the other. Since it is important that the two flashes should take place simultaneously, a special method of ignition must be used, which can be controlled at a distance, preferably at the same time as the shutter.

A pneumatic release, connected to the tube controlling the shutter, can be made to bring the mechanism of the flashlight lamps into action, the ignition being caused either by a ferro-cerium spark or by a small charge of fulminate. As a general rule, all lamps which are set ready for use should be handled very carefully, and in no case should the final adjustments be made before the charge has been added, since a premature release of the shutter may cause a serious accident, especially if the powder is being poured direct from the stock bottle. In many different types of lamp, the same operation alternately sets and releases the ignition mechanism.

The best lamps are undoubtedly those with electrical ignition, obtained by the explosion of fine metal wire (iron or copper), inserted in the powder, under the influence of a discharge. The ignition current is preferably started by the shutter itself at the moment it starts to open.[1] The current may be obtained from the lighting circuit or from a battery of dry cells.

Whatever the method used for the ignition of the powder, in case of a misfire, one should wait for some time before coming near the lamp, for a damp powder will often " recover " in a few seconds and flare up—possibly just when it is being examined.[2]

305. In a room where it is required to make a series of flash powder exposures, precautions must be taken to prevent the smoke from spreading.[3]

In a permanent establishment, it is usual to employ a large lantern, or, better still, a glazed cabinet with reflectors at the bottom and

[1] Mention should here be made of the different forms of the same idea embodied in the commercial supply of flash powders. These include cardboard cups, closed with a piece of paper, into which a fuse is afterwards attached (the cup is placed on a metal tray of ample size); packets made of paper treated with nitre or of celluloid, suspended by a thread, and ignited either by a fuse or by drawing a striker; sheets of touch paper with the flash powder placed between portions of which are cut off, hung up, and then ignited.

[1] A well-known type of blind shutter, used in studios, is fitted with an electric contact serving as the ignition starter, which is worked by the shutter itself.

[2] When using electrically controlled ignition apparatus fitted with movable trays, the tray should never be charged before it has been replaced in position, for if the circuit happens to have been left open the charge may be scattered over the hands. The worst that can happen if the tray is uncharged is the fusion of the ignition wire, which can cause no damage.

[3] Serious accidents, due to the conductivity of the smoke, have been caused by lighting magnesium powders underneath high tension electric conductors.

diffusing screens on the outside of the glass, the whole being connected directly or by means of a chimney to the outside of the room. For use away from the specially-fitted studio, a smoke trap consisting of a bag made of semi-transparent, non-inflammable[1] material, which acts at the same time as a diffuser, will be found very useful. The top of the bag can be hung from a metal crossbar attached to a vertical metal pole screwed at its base into a tripod, the lamp being fixed half-way up the vertical stand. The material is drawn in round the pole at the bottom end, allowing just enough room for the passage of the pneumatic tube or the wires leading to the ignition control. After each flash, the bag is opened out of doors.

306. For a portrait on a very fast plate, in the absence of any other effective illumination, using an aperture of *F*/8, a charge of about 30 gr. is necessary, divided into two parts, one about 22 gr. and the other about 8 gr. These are placed at least 6 ft. away from the head of the sitter, in a direction which makes an angle of about 45° to the side and also above.

The flash should take place outside the field covered by the lens, and at a sufficient distance to prevent any incandescent particles from reaching it.

If the powder is not ignited in a cabinet or a non-inflammable smoke-trap, it should be held at least a yard away from all curtains, hangings, partitions or ceilings, in order to avoid all risk of stains and of fire.

It is always advisable to include a bottle of liniment and some bandages in the flashlight outfit, so that they will be handy in case of burns.

The supply of flash powder should always be kept in several containers, so to limit, in case of accidents, the extent of the damage to persons and property.

[1] The material can be rendered non-inflammable by treatment in the following solution: water, 50 oz.; ammonium phosphate, 5 oz.; and boric acid, ½ oz. The materials should be left until thoroughly impregnated, and then put to dry without rinsing. (Formula of the Municipal Laboratory of Paris used for the light fabrics employed for theatrical scenery.)

CHAPTER XXV

FOCUSSING OF THE IMAGE AND THE POSITION OF THE SUBJECT ON THE PLATE

307. Focussing. In all cameras fitted with a ground glass screen, the focussing is done, as far as possible, by visual examination. The image formed by the lens on the ground glass[1] is examined under a black cloth,[2] while both the distance of the lens from the screen and the aperture are varied until the image possesses the definition most suitable for the work in hand.[3]

If the structure of the ground glass is very coarse, it is often of advantage to reduce the graininess by smearing a thin uniform layer of vaseline or glycerine over the surface of the screen. The transparency of the ground glass is, at the same time, greatly improved, an advantage which is particularly noticeable when photographing dark interiors. It is then necessary, however, when examining the edges of the field, to view the screen slantwise, i.e. in the direction of the rays from the lens, and not directly as in the normal manner.

If the ground glass is not too coarse, the sharpness can be judged much more easily with the assistance of a focussing magnifier (magnification of from 2 to 4 times), which is held against the screen in a sliding adjustment. This permits of setting the lens so as to give the best possible definition of the ground surface, or of any engraved or pencilled marks on its surface,[4] that can be obtained.

[1] Use ground glass with a very fine grain, not glass coarsely ground by sand-blasting. It is possible to produce quickly two pieces of ground glass by rubbing together two pieces of ordinary glass, placing between them a little fine emery powder mixed with water or, preferably, turpentine.

[2] A plastic effect is sometimes seen in the image formed on the ground glass by a lens of diameter of working aperture approximating to the separation between the eyes. This is explained by the fact that the light is diffused by the ground glass with a maximum intensity in a direction prolonging that of the incident beam, so that each eye sees the image formed by a different marginal part of the lens (§ 58).

[3] Corrections of focus, which must be ascertained by methodical tests, are sometimes necessary with anachromatic lenses (§ 311) or for infra-red photography (§ 220).

[4] With the ordinary type of focussing magnifier the edges of the field cannot be examined at the oblique incidence necessary to obtain a well illuminated image. This difficulty can be overcome by cutting away an oblique section of the tube of the magnifier, so that the lens can then be placed normally or obliquely against the glass, according to circumstances.

In principle, focussing should be done with the same aperture as that to be used for taking the photograph, since, with lenses possessing spherical aberration, a variation in the size of the aperture causes a displacement of the position of sharp focus.

When using a camera of the type in which the moving part is fixed in position after focussing, by means of a screw concentric with the one controlling the rack-extension, it is always advisable, having secured the position, to make sure that the focus has not been accidentally altered.

To facilitate the accommodation of the eyes during the focussing of a dimly-lighted subject, the well-illuminated parts should be examined first, afterwards coming to the darkest areas by a gradual transition through the parts of intermediate illumination (§ 246, footnote).

If the subject is too dark to permit the examination of the image, good definition may be successfully obtained by focussing on the flame of a candle or lamp[1] placed in line with the chief parts of the subject.

Hand cameras without ground glass screens are focussed directly by a coupled telemeter (§ 174) or, after the distance of the subject from the lens has been either judged or measured, by means of a distance scale (§ 88) or by the use of supplementary lenses (§ 118).

In all cases it is necessary to bear in mind the rules which have already been given dealing with the depth of field and the best distribution of sharpness between two given points (§§ 76 to 85).

When copying flat originals or prints by means of a suitably equipped apparatus (§§ 150 to 152), sharp focus and size of image are obtained by bringing the various movable adjustments opposite the scale divisions corresponding with the required scale of reproduction, finally verifying that no error has been made during these operations by an examination of the ground glass screen.

308. Fine Focussing. When it is necessary to obtain very precise focussing (scientific work, or tests for making a focussing scale), it is well

[1] When using an electric pocket-lamp remove the bull's-eye lens.

to replace the ordinary method of *judging* the point of maximum sharpness by a *coincidence* method known as *parallax focussing*. For this purpose the ground glass screen should be rendered transparent in one or two conveniently placed areas (centre and edges of field), either by protection during the grinding or by covering the desired areas with pieces of very thin glass (microscope cover slips) cemented with canada balsam. A cross should have been scratched on the unground part of the screen, or marked out with a hard pencil on the area to be covered.

After the image has been focussed as sharply as possible by examination of the ground part of the screen, a magnifying lens, adjusted to give a sharp image of the cross, is applied to the transparent area. It is now possible to see at the same time both the image of the subject and the cross in the plane of the screen. If the image is formed accurately in this plane, any displacement of the eye, either upwards or downwards, or to right or left behind the lens, will not alter the position of the cross relatively to the image. If, however, this is not the case, the direction of the displacement will indicate whether it is necessary to lengthen or shorten the camera extension. The extension is too long if the cross is displaced relative to the image in the same direction as the eye is moved. If the cross moves below the image as the eye is raised, the extension is too short.

309. Soft Focus. In photography there is occasion to consider two entirely distinct cases. First, it may be desired to obtain a result conforming to certain scientific, legal, or commercial requirements, in which case perfectly sharp definition is an essential quality. On the other hand, a photograph of artistic effect may be required, in which it is desired to suggest the impression conveyed by a subject without faithfully reproducing its finest details.

A photograph is not necessarily artistic because the focus has been softened. On the other hand, a rigorously sharp picture, in which details ordinarily imperceptible to the eye without close examination are easily discerned, can never create an artistic effect, whatever other merits it may possess.

The focussing in the second case is always much more difficult to judge, for the degree and distribution of the softening demands not only a certain aesthetic taste and knowledge of psychology but also a full acquaintance with the various methods used for the production of pleasing soft effects.

The degree of softness will obviously depend on a large number of factors, more especially on the size of the picture, on the subject, and on the artistic education of the public to whom the work is to be presented. It is evident that the outlines may be made much more diffused if the picture, owing to its size, is to be viewed from a distance. A portrait of a child or of a young woman can be treated with a certain amount of freedom, while that of an old man is often better rendered with a less degree of diffusion. And then, again, the uneducated will only approve with difficulty of a soft-focus portrait, which they will consider to have been bungled, whereas they will accept a photograph with softened outlines without any tendency to hardness. On the other hand, a photograph with very softened outlines is much more

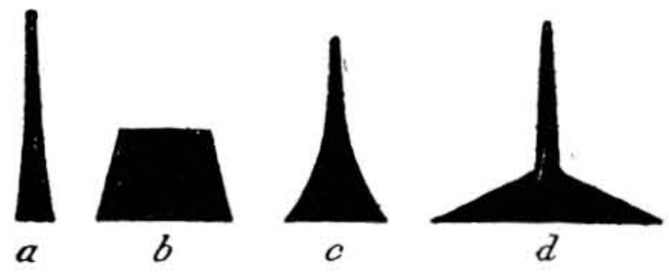

FIG. 165. DISTRIBUTION OF DENSITY IN LINES OF VARIOUS IMAGES

(*a*) Sharp image (*b*) Out of focus. (*c*) Softness produced by anachromatic lenses. (*d*) Superposition of a sharp and diffuse image.

pleasing to the cultivated taste, unless the effect has been exaggerated to a degree which is considered suitable only in studies executed for decorative purposes.

The method which most naturally suggests itself for the avoidance of the extreme sharpness afforded by the modern technically perfect lenses, such as the anastigmats, is to deviate more or less from the normal position of sharp focus. This method, however, invariably results in distinctly unpleasant portraits, in which the sharp definition, though absent from the main subject, appears in some minor part where it is least wanted.

An attractive portrait which is neither too sharp nor too soft can usually only be obtained by a combination of two images, one of which is perfectly sharp but of subdued intensity, while the other of softened outlines is used to obtain the desired effect.

Many different methods may be used to obtain this combination, either from a single negative, by double printing from a single sharp negative, or by taking a print from a combination of two negatives taken at the same time. Fig. 165 shows in diagram form the appearance of a line in the principal cases considered.

310. Making Soft-focus Negatives. A recent variation (de Dalmas, 1923) of a very old method (A. Claudet, 1866) gives some very interesting results, which, however, its author admits (§ 312) to be inferior to those obtained by the Artigue method on account of variation in the scale of the image. During about two-fifths of the exposure the extension is increased by one-eighth or one-twelfth of an inch for a wide-aperture portrait lens, or one-fifth of an inch for a lens of smaller aperture.

In a somewhat similar method the camera is first focussed on a point considerably in front of the subject, and the lens is then stopped down until sharp focus is obtained. Half the requisite exposure is then given, after which the aperture is opened to an intermediate position and finally to full extent. At each of these positions an exposure is given equivalent to a quarter of those necessary at the apertures used (E. Genet, 1923). This method is only applicable to still landscape photography, but is much more suitable to this class of work than the previous method.

We have already mentioned the use of diffusing screens (§ 126), which transmit a sharp image through the central part and a soft image through the outer part.[1]

A very simple arrangement which can be used with large-aperture lenses yields some very pleasing results (G. Cromer, 1920). At a small distance behind the lens is placed, parallel to the plane of the sensitive plate, a very thin sheet of gelatine (such as is used by engravers), or glass (similar to extra-thin microscope cover slips) with imperfect surfaces. In this manner a certain fraction of each ray of light is slightly deviated from the direction which would give a sharp image, and the resultant effect can obviously be varied either by altering the thickness of the sheet or its distance behind the rear lens component. In a variation of this method (J. Sereni, 1924) a special type of grating, composed of glass strips separated by spaces about equal to their own width, is placed behind the lens. Upon the sharp image formed by the fraction of each bundle transmitted by the spaces is superimposed a soft image due to the interposition of the relatively thick transparent medium with non-parallel surfaces.

[1] It is a common practice, especially in enlarging, to place in front of the lens a piece of stretched fabric, which by diffraction introduces a certain softness into the print. The softness increases with the closeness of the weave of the fabric; the more the threads diffuse the light the less the contrast.

Finally, a negative with soft outlines can be obtained by the use of a lens which has been imperfectly corrected for spherical or chromatic aberrations, the resultant image in this case being composed of a large number of elementary images corresponding either with the various concentric zones of the lens or with the different coloured radiations.[1]

There are on the market many types of lenses which are incompletely corrected for spherical aberration. They exhibit no peculiarity in use other than the fact that any alteration in the size of the aperture or in the length of exposure has an appreciable effect on the result, the image being much sharper when a small aperture, or, within normal practical limits, a short exposure, is used. Many lenses, more particularly those employed for portraiture, will give, as desired, a perfectly sharp image, or, after alteration of the distances between the various components (obtained by rotation of a ring in a spiral groove), a soft image due to spherical aberration.

Anachromatic lenses (§§ 97, 101, 110), which can easily be prepared by the photographer himself from very cheap components (spectacle lenses), have given some very remarkable results in the hands of numerous artistic workers. Their use is often criticized because an adjustment of the extension is necessary after the focussing has been done, and also because widely different results are obtained when light-sources of different compositions are used successively (mercury arc, daylight, incandescent lamps).[2]

311. Correction of Focus with Anachromatic Lenses. The following rules apply only in those cases where the work is carried out with crown-glass lenses on "ordinary" emulsion, the subject being illuminated by daylight.[3]

[1] The sharpness of the image can also be reduced by fitting the lens with a supplementary uncorrected convergent or divergent lens (§§ 118 and 119) or with a non-achromatic afocal lens (§ 126) or with a very weak convergent or divergent lens, of which the centre is cut out (the sides of the aperture must be blackened).

[2] By using quartz anachromatic lenses any correction of focussing is rendered unnecessary, since the chromatic aberrations in these are considerably less than in uncorrected glass lenses, but the price is prohibitive.

[3] If the mercury arc is used for the illumination, correction after focussing is no longer necessary, the image being even a little sharper than that obtained by applying the correction in daylight. Further, there is no need for any correction when working with orthochromatic or panchromatic emulsions with a yellow filter. Illumination by incandescent lamps, which are very poor in violet and especially in ultra-violet, or the use of an aesculine filter to absorb the ultra-violet,

For simple or symmetrical[1] anachromats, the extension should be *reduced* after focussing, in order to bring the plate away from the plane of the sharp image formed by the yellow radiations into the plane of the sharp image formed by the violet radiations.

For distant subjects this correction amounts to about one-fiftieth of the focal length; for near subjects it should be calculated, once and for all, by means of the following formula, in which F represents the focal length and p the distance of the subject from the lens—

$$\frac{F}{50}\left(\frac{p}{p-F}\right)^2$$

For adjustable landscape lenses (telephoto anachromat), the extension should be reduced by a constant amount, obtained by adding one-fiftieth of the focal length of the combined lenses to one-twenty-fifth of the extension, reckoned from the ground glass screen to the rear lens.

For the telephoto studio lenses, the correction should be made by altering the position of the two systems (the lens objective and the divergent negative attachment). With telephoto anachromats, the two systems should be *brought closer together*, the constant amount of this displacement being determined by trial once and for all for a given objective. The systems of a telephoto semi-anachromatic objective should, after the focussing, be moved farther apart, the extent of the correction, which is practically constant for a given combination, being considerably less than in the previous case. In this case again the correction should be determined by a series of trials.

312. Photography with Two Superimposed Plates. One of the most ingenious methods which have been proposed for the production of soft-focus photographs is that described in 1921 by the painter, E. Artigue. Two plates are exposed one behind the other[2] in the same plate-holder, with the two sensitive surfaces facing the lens.

One of the sensitive surfaces is therefore in the plane of the sharp image, while the other is behind this plane, with the emulsion layer of the first plate acting as a diffusing medium in between. The normal time of exposure should be increased by about 50 per cent in order to reduce the contrasts in the first negative by over-exposure, and also to obtain an image on the second plate, in which the contrasts will be exaggerated by under-exposure.

The two negatives, when superimposed for printing, should together have the density of a normal negative, and so the development of the first negative should be considerably curtailed, while the second one should be developed to the full, under-exposure preventing it from becoming too dense. Practice will soon show the operator the balance to be struck between the two negatives in order to obtain the desired effect.

For printing, the two negatives are placed one on the other in correct register, an operation which presents very little difficulty. It should be understood that the sharp image must be on the outside, so that the two plates occupy the same relative positions as during the exposure. Printing or enlarging is carried out in the same manner as with an ordinary negative, but it is advisable before commencing these operations to bind the two negatives securely together with gummed strips.

Figs. 166 to 168 show the prints taken respectively from the two component negatives and their combination.

313. Production of Soft Focus by Printing.[1] Effects somewhat similar to those produced by the method which has just been described may be obtained by printing from a sharp negative (H. Bourée, 1923). A piece of sensitive paper is fixed in position on a table by means of gummed paper or metal weights. These may also serve as stops for the negative if some other suitable arrangement has not been made, e.g. by driving three tacks into the table at convenient points just beyond the edges of the paper, which in this case should be approximately equal in size to the negative. First, a piece of ground glass is placed with ground surface upwards on the paper, and the negative is then laid on it, gelatine face in contact with the ground glass. A preliminary exposure is given by a matt electric bulb placed about 5 ft. above the table.

allows the correction given above to be reduced considerably. One or two trials show the most suitable amount of correction in given circumstances.

[1] In the case of a symmetrical anachromat the correction can also be made by altering the distance between the two components (§ 101 footnote).

[2] Obviously neither anti-halation nor double-coated plates may be used; the second plate may be replaced by a film, or it is possible to use two films with their backs in contact.

[1] This paragraph should strictly be included in a later chapter of this work, but owing to the close connection between the effects themselves, and the methods used for obtaining them, it is perhaps better not to separate it from the preceding paragraphs.

Having extinguished the lamp, the ground glass is removed and the negative replaced against the guides in contact with the sensitive surface of the paper. In each case pressure may be applied by means of a thick piece of plate glass, especially if the paper is at all inclined to curl. A second exposure is then given and the paper is then removed and developed. According as one or other of the exposures is made to predominate (taking into account the absorption of the light by the ground glass during the first exposure) a soft or a sharp print may be obtained at will. It is easy to determine the "coefficient" of the diffuser used,[1] so as to facilitate any future calculations of the partial exposures.

The same working method may be used for enlarging, especially if a vertical enlarger is employed, no registration being then necessary if the paper is properly placed on the projection table.

Mention should be made of another method of obtaining soft-focus prints which consists in interposing between the negative and the paper a thin piece of celluloid or glass during a fraction of the exposure. If the negative is fastened to a mask which extends well beyond the edges, and the print is made on a sufficiently large piece of paper, any shift of the paper relative to the negative may be easily avoided when using the ordinary printing frame; the paper is simply held tightly against the mask with two fingers during the opening of the frame and the removal of the transparent film.

314. Choice of View-point. Although we do not propose, in this book, to discuss the aesthetic questions which

[1] In order to do this, a piece of the paper is exposed under the bare negative, and other pieces are exposed under the negative in contact with the ground glass screen for gradually increasing times, at the same distance from the lamp. The ratio of the two exposures (with and without the screen) which give similar prints when developed together for the same time is the required coefficient of the screen.

FIG. 166. ARTIGUE TWO-PLATE PROCESS—PRINT FROM THE FRONT NEGATIVE

FIG. 167. ARTIGUE TWO-PLATE PROCESS—PRINT FROM THE REAR NEGATIVE

FIG. 168. ARTIGUE TWO-PLATE PROCESS—PRINT FROM THE COMBINED TWO NEGATIVES

arise in the practice of photography, yet we think it necessary to put the reader on his guard against one or two frequent mistakes.

The most favourable view-point for a subject or a group should be chosen without regard to the scale of the final print, but with sole consideration for the usual rules of composition.

Every photograph should express an *idea*, conveying to those who contemplate the print the same impression produced at the time the subject was chosen. The picture should contain *a principal subject* (idea of *unity*), and should not combine several subjects, each of which presents a special point of interest, with nothing, however, to unite them. The attention should be drawn immediately to the central theme, the eye being led there, not merely by sentimental interest, but by the convergence of the principal lines and by the contrasts of light and shade, which should be more striking than elsewhere.

No part should be identical with another, and nothing should be symmetrical (idea of *variety*), but there should be a certain balance of lines and tones, conveying an impression of *stability*. The principal lines of the composition, with the exception of the verticals, should not be parallel to one another nor to the frame, but should oppose one another (*opposition*). Balance is obtained, as a rule, by means of an element of secondary interest in the picture (which may be no more than a patch of tone), this secondary feature being placed, for example, at a point diagonally opposed to the principal subject.[1]

It should be noted that a subject which is attractive solely because of its colouring will give very disappointing results in monochrome photography. Some idea of the appearance which a photograph of a subject will present on an ordinary emulsion and on an orthochromatic emulsion can be obtained by examining it through a blue (§ 207) or a green glass (§ 210) respectively.

315. The mistake in composition which is most frequently made is as follows: Having selected a subject (which is easy to the practised eye, able to choose from the attractive subjects which are to be found everywhere), and set up the camera in the place considered most favourable, a move is made to a different view-point, generally much nearer the subject, under the idea that the picture is too small and would not fill the area of the plate to be used. A subject is attractive from a certain view-point because, relative to that point, the lines of the scene are grouped harmoniously, but the attractiveness is generally lost if the view-point is moved either nearer or farther away. Having once selected the view-point, it is better to choose from among the lenses at hand one which will allow the plate to be most completely filled by the picture,[1] bearing in mind the fact that any unwanted parts may be excluded later. If the picture is considered too small, it is advisable to enlarge it, or to have an enlargement made from it if the necessary apparatus is not available. (See Chapter V for the rudiments of photographic perspective and the effect of the distance between view-point and subject.)

Having chosen the subject and the view-point, which necessarily fix the angle of the picture and the position of the camera, the limits of the subject are best adjusted by decentring[2] the lens in the direction and to the extent considered necessary (§ 155).

[1] By dividing the sides of the picture into an odd number of equal parts, e.g. three, and joining these points by lines parallel to the frame, the *principal lines* are obtained, the intersections of which coincide with the chief points of the composition. The composition may be sometimes facilitated by drawing the principal lines of the picture within the space of the focussing screen of the camera.

[1] For this purpose a focimeter or an iconometer may be used similar to the frame view-finder described in § 171, the frame being movable along a groove graduated in focal lengths. If, for example, the sides of the frame are equal to a quarter of the corresponding dimensions of the plate, the lengths of the scale graduations attached to the frame will also be equal to a quarter of the various focal lengths to be used.

[2] Decentring of the lens is practically equivalent to cutting off, from the circular image which would be formed by the lens if a much larger camera were used, that part (equal in size to the plate actually employed) in which the selected subject is best arranged.

CHAPTER XXVI

EXPOSURE

316. Time of Exposure. For the majority of subjects there is *no single correct time of exposure, but a more or less extended range of times each of which is equally admissible.* The minimum exposure is that which will record the shadows as a faint density just distinguishable from the chemical fog, while the maximum exposure is that above which the density recorded in the lightest half-tones becomes indistinguishable from the density given by the perfectly white parts.

In the case of a very contrasty subject taken on an emulsion poor in silver salts, it is quite possible that no time of exposure will satisfy *at the same time* the two conditions stated above, but such a case is exceptionally rare. In such an extreme case (see Chapter III), which is always avoidable in technical photography, there is no necessity to expect the photographic emulsion to record variations in luminosity which are imperceptible to the eye (§ 17).

In all other cases, the range of satisfactory times of exposure (measured by the ratio of the maximum and minimum times) is known as the *tolerance* or *latitude* of exposure. This latitude becomes greater firstly with decreasing contrast in the subject to be represented, and, secondly, as the range over which the emulsion is capable of rendering intensities increasing in geometrical progression by densities in arithmetical progression is extended, or in other words, as the straight-line portion of the characteristic curve is extended (§§ 201 and 202, Fig. 139c).[1] This condition is usually best fulfilled with emulsions very rich in silver salts.[2]

The range of intensities[3] which can be rendered by good emulsions often exceeds 180 : 1, whereas very few photographic subjects possess a contrast exceeding 30 : 1. It will be seen from these values that the second is contained six times in the first $\left(\frac{180}{30} = 6\right)$, so that the maximum and minimum exposures are in the ratio of 6 to 1.

Success in photography would be exceedingly rare if it were not for this latitude in exposure. Fortunately, exposures outside this range still give results which, although less correct, are nevertheless often quite satisfactory. If this were not the case, the photography of rapidly moving objects would be practically impossible.

317. Results of Errors in Exposure. Negatives which have been given varying times of exposure within the limits defined in the previous paragraph and then developed for the same time in the same bath will only differ from one another in their mean density, and not in contrast. They will give, therefore, identical prints on the same paper, but the printing will take longer in the case of the denser negatives. If, for example, one of them was exposed for five times as long as another, then, at a rough approximation, the first will take five times as long as the second one to print, or if equal times of exposure are given in the printing, the first negative will require five times the intensity of light. These two negatives, while very different in appearance when compared in the same illumination, would appear identical if they were illuminated respectively by a 50 and a 10 candle-power lamp. They would appear equal[1] under the same

[1] Excellent results, however, may be obtained by working outside the limits of this straight-line portion of the curve. With low exposures, all the tones may be rendered correctly on the lower curved region (under-exposure region), if the slope of this part of the curve is at least about two-thirds of the slope of the straight-line portion. With much greater exposures the upper curved part (over-exposure region) may be used up to the point where the slope is about half that of the straight-line portion.

[2] The latitude of exposure is particularly small in emulsions coated with a very thin layer for reversal processes (Autochrome plates, amateur cinematograph films).

[3] A paper published in 1922 by the Bureau of Standards of the United States (Scientific Paper No. 439) brings together the characteristics of every different brand of sensitive materials manufactured at that time in America (without disclosing the makers' names) and states, for each of them, the range of intensities rendered by the straight-line portion only of the characteristic curve. For the fourteen single-coated ordinary emulsions measured, the range varied from 20 (for two brands only) to 150 (mean = 77); it reached 300 for one double-coated orthochromatic plate. The lowest values were given by certain brands of roll-film (from 10 to 100; mean 42). We purposely exclude from these mean values the emulsions made especially for reproduction work, since they are prepared to give maximum contrasts (mean range 6).

[1] An over-exposed negative gives, however, images that are slightly less sharp than a correctly exposed negative owing to the fact of the adding up of the

illumination if the lesser exposed negative were combined with a lightly-smoked piece of glass or a uniformly-fogged and developed plate, transmitting about one-fifth of the incident light-intensity.

Of these two negatives, yielding identical results, the professional photographer will always consider the thinner one to be correctly exposed and the denser one over-exposed. Retouching, a necessary operation in professional photography, is in fact much more easily done on a thin than on a dense negative. He would probably have stopped the development of the more exposed negative some time before the lesser-exposed one, in order to obtain greater transparency. The negative developed for the shorter time would then be much less contrasty and would no longer, therefore, yield on the same paper a print identical with that from the other negative, but each could be made to give excellent prints by the choice of suitable papers with characteristics appropriate to the separate requirements of the two negatives.

318. Insufficient exposure always results in a thinner negative than would have been obtained with correct exposure, with lack of detail in those parts corresponding to the darker parts of the subject, and with increased contrast between the images of the shadows and high-lights. As we shall see later, it is only in certain special cases that it is possible to compensate for under-exposure by prolonging development; for this purpose the negative must be considerably under-exposed. Increasing the time of development of a negative in which the shadows are under-exposed and the high-lights correctly exposed can only exaggerate still more the contrasts between the shadows and the high-lights, these latter merging into the lighter half-tones unless appropriate correction is afterwards made.

Over-exposure yields a much denser negative than one which has been correctly exposed and developed under identical conditions, and the contrasts, especially in the half-tones, is reduced. To obtain the same degree of contrast it would be necessary to prolong development, which would result in a further increase in density of the negative. Their liking for a "nice" negative, even though it yields poor prints, causes a large number of photographers to cut short the development, in order to obtain an image in which the mean density approaches that of a correctly-exposed plate developed to the required degree of contrast.

319. **Factors Affecting Time of Exposure.** The limits of normal exposure depend on the illumination of the subject,[1] its distance from the camera, the relative aperture of the lens, and the sensitivity of the emulsion, allowing for any colour filter in use. This correction is applied by multiplying the exposure necessary for the plate without filter by the filter factor corresponding with the conditions under which it is used (§§ 211 and 213).

The illumination of the subject depends, as we have already seen (§§ 287 and 288), on the height of the sun and the atmospheric conditions.[2] When, however, the subject is not situated in open country, the extent of sky which can be seen from the position occupied by the subject, and the diffusion of the light by neighbouring objects, both modify the

effects of the residual lens aberrations, irradiation in the emulsion, and slight movement (vibrations, etc.) of the subject or camera. The grain of an over-exposed negative may also be more marked.

[1] It is often pointed out that the time of exposure depends on the amount of light falling from the subject on to the lens, or (combining the first three factors mentioned above) on the intensity of the image on the ground glass screen of the camera. Many instruments for the measurement of the time of exposure have been based on this method of evaluation. While, in many cases, both these plans lead to practically identical results, it is not difficult to show the inexactitude of the principle and the considerable extent of the errors which are caused by its too strict application. It is, in fact, quite obvious that the same exposure would be necessary for photographing a person behind whom is placed first a white and then a black background, or for a charcoal drawing on paper and a chalk drawing on a blackboard. Yet, in both these examples, the intensity falling on the lens from the *whole subject* is much greater in the first case, for the mean luminosity of the image is much greater when photographing black lines on a white background than white lines on a black background. The judgment of the time of exposure can only, therefore, be based on the luminosity of the darkest shadows in the image thrown on the focussing screen, but unfortunately this intensity is very difficult to judge and still more so to measure. It is only in reversal processes, as for direct colour plates and films and amateur ciné film, that the exposure should be based on the luminosity of the brightest parts of the subject.

[2] It is necessary to add to the factors affecting the illumination the altitude of the subject and of the operator. The exposure necessary is considerably smaller in mountains than below, owing to the decreased absorption of the solar rays by the atmosphere. As a rough approximation, the following relative values of the time of exposure may be accepted for plates and films exposed without interposition of a coloured filter—

Altitude	0 ft.	3,000 ft.	6,000 ft.	9,000 ft.	12,000 ft.
Relative time of exposure	1	0·75	0·66	0·50	0·3

illumination to an appreciable extent. In an interior, for example, the illumination is much more efficient if the walls and hangings are bright and of colours which are actinic to the type of emulsion in use.

The intensity of the image varies only slightly with the distance of the object from the lens when this distance is very large, but it rapidly becomes less as the object is brought nearer and nearer. To compensate for this reduction of intensity, it is necessary, all other factors remaining the same, to increase the time of exposure (§ 91). The table given below shows, in the case of a flat subject, the relative times of exposure for different values of the scale of the image (§ 62) and for the corresponding distances between the subject and camera,[1] the distances being expressed in focal lengths of the lens, which is taken as the unit of length.

Scale of the image	Very small	0·054	0·11	0·20	0·25	0·33	0·50	0·66	1·0
Distance from the camera measured in focal lengths	Very large	20	10	6	5	4	3	2·5	2
Relative times of exposure	1	1·10	1·23	1·44	1·56	1·78	2·25	2·76	4

In the case of objects or portraits, these factors should be considerably increased, for small areas of shadow, which it is not necessary to reproduce in detail when photographing a distant object, become so much more important in a photograph taken at a short distance that a further adjustment of the exposure is required to bring out the details clearly. For example, when working at 10 focal lengths as compared with a great distance, the best will be obtained by multiplying the exposure not by 1·2 but by about 30, the exposure being then given for the shadows and not for the high-lights.

Finally, as already stated (§ 90), the intensity of the image is proportional, other conditions remaining constant, to the square of the relative aperture. The times of exposure should therefore be proportional, assuming the reciprocity law[2] to hold good, to the square of the denominator n in the fraction $1/n$ expressing the relative aperture; in other words, to the square of the F number (§ 71). The lens stops are usually so graded that, with the same reservation which we have just formulated, the exposure must be doubled as the next smaller stop in the series is used.

It is necessary to stress the fact that in a camera possessing a variable speed shutter, the diaphragm must be used merely to regulate the depth of field.[1]

Different exposures may sometimes suit one and the same subject better according to the interpretation desired by the photographer. The optimum exposure will not be the same, for instance, for a landscape with figures, according as it is regarded as open air portraiture or as a landscape with living figures.

320. Influence of Type of Subject on Time of Exposure. We have stated (§ 316) that, in principle, the minimum time of exposure is that which produces a useful image of the deepest shadow and in consequence assures a satisfactory rendering of the details in the darkest tones.[2]

This rule is nothing but a re-statement of the old adage, "Expose for the shadows and let the high-lights take care of themselves." There are, however, a large number of cases where the exposure may be considerably less than this minimum, as for example in all open landscapes with entire lack of objects in the

[1] With a telephoto lens the measurements are based on the scale of the image only. The distances should not, therefore, be measured from the camera but from the front nodal plane, which frequently is at an appreciable distance in front of the lens.

[2] This reservation applies mainly to very dimly illuminated subjects, when, for instance, it is necessary to stop down to a large extent in order to increase the depth of field in an interior photograph. The minimum correct exposure with very small apertures can be, at least with certain emulsions, considerably greater than that based on a calculation from the exposure necessary for the same subject using a much larger aperture (see § 202, footnote). Failure to take into account the Schwarzschild law often leads to the conclusion that the use of very small stops tends to increase the contrasts, since the calculation of the time of exposure on the basis of its inverse proportionality to the intensity leads to under-exposure, and as we have already seen under-exposure exaggerates the contrasts (§ 318).

[1] Amateur ciné cameras in which there is no adjustment of the shutter aperture are sometimes fitted with neutral grey filters that reduce the light to a known degree so as to reserve the diaphragm for its normal role.

[2] We do not deal here with the case of direct positives obtained by reversal (§ 441).

foreground.[1] The shadows in this type of subject only appear on the image as small patches, and it would therefore be absurd to attempt to bring out their detail.[2]

The presence of such details could, in certain cases, spoil the effect intended by the artist. This would certainly be the case in a photograph taken purposely against the light, in which it would be unnatural to record shadow details which could not be detected by the eye under such conditions of glare. Another such case is that of snow scenes, in which it is often much more important to exaggerate a little the play of the light on the surface of the snow than to bring out the details in the shadows, which are usually of interest only for their mass effect. In the same way, when making cloud photographs for the purpose of meteorological studies, any landscape foreground may quite well be ignored; it will be sufficiently represented as a bare expanse without detail.

321. Influence of Relative Displacements of the Subject and of the Camera. If, during the exposure, a movement of the subject, of the camera, or of both at the same time takes place, the image will no longer be rigorously sharp, and the unsharpness produced will be greater according to the velocity of the image in the plane of the sensitive surface, and also according to the length of exposure. In order to obtain an image which appears sharp[3] no point in it should be displaced beyond a certain distance, and it is only logical to allow the same latitude in this displacement as has already been admitted in the case of sharpness of reproduction of points situated in front and behind the plane of sharp focus (§ 76). This, according to circumstances, is about 1/250th in., or about 1/2,000th of the focal length.

If the velocity of the image in the plane of the sensitive plate is v in. per second, then if we adopt as the limit of sharpness 1/250th in. or $F/2{,}000$ (the focal length F being expressed in inches), the time of exposure t should be such that the product vt is at the most equal to 1/250th in. or to $F/2{,}000$ in.

It is easily seen that the velocity of the image on the ground glass screen becomes smaller, firstly as the scale on which the subject is represented is reduced, and secondly, as the angle between the direction of its movement and the optical axis of the lens is reduced.[1]

Based on these facts, it is easy to construct a table showing, for the most usual cases, the maximum time of exposure which may be given.[2]

Except in cases of absolute necessity, nothing should be attempted if the maximum exposure indicated by this method falls considerably below the minimum time of exposure worked out on the basis of the sensitiveness of a plate or film, or is less than the shortest exposure which the shutter in use is capable of giving.[3]

In the table given on p. 215, the maximum

[1] If the photograph is taken with a high-magnification telephoto lens, all objects which stand out in front of the others, even though they are far away from the camera, should be regarded as in the foreground, and it is, therefore, necessary to bring out the detail in the shadows.

[2] When a bright subject is being photographed against a dark background it is often advisable to under-expose the latter for the sake of subduing uninteresting details.

[3] In pictorial photography a slight unsharpness in the case of a moving object tends to help the suggestion of movement. Here, however, it is a question of personal taste, which cannot be expressed numerically.

On a negative taken with a very prolonged exposure (using a slow emulsion, or a very deep colour filter, or a very small diaphragm) there is no trace of the image of subjects that have rapidly crossed the field. This peculiarity has sometimes been utilized to "eliminate" persons walking in front of a monument or of a landscape.

[1] This is readily shown thus. If we call V the actual velocity of subject relative to the camera, θ the angle made between its direction of motion and the optical axis of the lens, then v, the velocity of the image on a scale of magnification m, is given approximately by $v = Vm \sin \theta$. The velocity of the image, therefore, varies between Vm (when the motion is perpendicular to the optical axis) and o (when the motion is parallel to the axis). In this latter case it is not a question of the *displacement* of the image but of a progressive change in the scale of magnification.

[2] It is necessary to point out that, when photographing a person or an animal running, the speed of the feet is much greater (generally double) than the speed of the body, except for the instant at which they come in contact with the ground. Similarly, when taking photographs with a camera in motion (photographs taken from a moving vehicle or aeroplane) the vibration and swaying transferred to the camera, will, at certain instants, considerably increase the velocity of the image.

[3] If the image of the subject is easily visible in the view-finder, it is sometimes possible, when the subject does not pass too near to the camera, to follow a fixed point in the subject with the intersection of the lines or wires (which indicate in the view-finder the direction of the optical axis) in such a manner as to cancel or minimize the apparent velocity of the image in the plane of the sensitive material. Under these conditions, with an exposure appreciably longer than the calculated value, it is possible to obtain a sharp image of a moving object, while the image of all stationary objects will be indistinct, each point in them being displaced in a direction parallel to the movement of the camera.

times of exposure are roughly calculated, allowing a latitude in sharpness of 1/250th in., and supposing that the displacement is at right angles to the optical axis of the lens. To convert these times to the basis of any other standard of sharpness it is only necessary to multiply them by the ratio of the new standard of sharpness to the one in use. They may be doubled, for example, if a sharpness of 1/125th in. be considered satisfactory, while, on the other hand, they should be halved if a sharpness of only 1/500th in. is allowed. It should be noted that if the relative sharpness is calculated from 1/2,000th of the focal length, the times given in the table below should be multipied by the numerical factor $F/8$, the focal length F being expressed in inches.

With a lens of from 4 in. to 6 in. focal length (as used in the majority of hand cameras), the maximum time of exposure, expressed in hundredths of a second, which will give a sharpness of approximately 1/250th in., may be calculated in the following manner (E. Pitois, 1921).

Divide the distance of subject from the camera in yards, by the speed of the object in miles per hour; multiply this quotient by 0·2 if the displacement is at right angles to the axis, by 0·4 if the displacement is oblique, or leave it as it is if the displacement is parallel to the axis.

322. Instantaneous and Time Exposures. From the point of view of carrying out the operations, there is no real distinction between instantaneous and time exposures; it is probably more correct to say that there is no such thing as an instantaneous exposure. Every negative is more or less exposed; a negative which has been exposed for a long time may still have had insufficient exposure, while a negative exposed only for a few thousandths of a second may be over-exposed.

A misunderstanding, probably due to the wonderful promises made by certain dealers, has led many novices to believe that, once possessed of an instantaneous (snapshot) camera they have only to press a button to obtain excellent photographs with certainty in about 1/25th second, whatever the time or place,[1] even though it be in the depths of a tunnel, or on a moonless night!

323. Practical Determination of the Time of Exposure. The professional, e.g. the studio portraitist, who is always working in the same place on subjects which differ very little one from another (photometrically speaking), is very soon able to acquire the practical experience which enables him, almost instinctively, to estimate the time of exposure with an accuracy which nearly always brings it within the limits of normal exposure. This is more particularly the case in portraiture, where the restricted range of contrasts increases the latitude of exposure.

The amateur, whose photography is done only during the best months of the year and who confines himself almost entirely to subjects of the same character, frequently attains, but not without spoiling an appreciable number of plates or films at the beginning of each season, a certain skill in judging the exposure, roughly, it may be, but closely enough to enable him to obtain satisfactory negatives.

This is not the case with the photographer, who, from necessity or choice, attempts successively a very wide range of subjects, sometimes exterior, sometimes interior, nor with the worker who through force of circumstances has

[1] In fine weather in the open, nearly all the objects within the field of view may be readily seen if the eyes are open and shut as rapidly as possible. In bad light the same instantaneous blinking of the eyes will reveal only those objects which are more strongly illuminated than the rest; the whole view will be seen only after a long and close inspection. The photographic plate behaves very similarly. We point out this obvious fact in order to bring beginners to a proper understanding of the possibilities of their cameras.

MAXIMUM TIMES OF EXPOSURE (fractions of a second)

Subjects. Perpendicular displacement to the optical axis	Velocity in miles per hour	Distance of subject from the camera in focal lengths		
		50	100	500
Swimmer	2½	1/200	1/100	1/20
Walker	3	1/300	1/150	1/30
Runner	12½	1/1200	1/600	1/120
Cyclist	15	1/1400	1/700	1/140
Skater	28	1/2500	1/1250	1/250
Horse walking	4	1/400	1/200	1/40
Horse trotting	9	1/1000	1/500	1/100
Horse galloping	19	1/2000	1/1000	1/200
Racehorse	31	1/3000	1/1500	1/300
Waves	15	1/1400	1/700	1/140
Heavy waves	44	1/4000	1/2000	1/400
Boat making 10 knots[1]	10	1/900	1/450	1/90
,, ,, 20 ,, [1]	20	1/1800	1/900	1/180
Street tramcar	9	1/800	1/400	1/80
Motor-car on road[1]	35	1/3000	1/1500	1/300
Slow train[1]	25	1/2000	1/1000	1/200
Express train[1]	60	1/5000	1/2500	1/500
Aeroplane[1]	95	—	1/4000	1/800

[1] The same times are applicable to a landscape photograph taken from any of the above means of transport, as long as the foreground is at a corresponding distance away. The times of exposure may be increased by one-half when the direction of motion makes an angle of approximately 45° with the optical axis; they may be three times as long when the direction is parallel to the optical axis.

to operate in a climate to which he is unaccustomed. Under these conditions, through errors of judgment, the exposures very frequently fall outside the limits of normal exposure, causing a high proportion of useless negatives.

Since the time of exposure is easily ascertainable with a sufficient accuracy for all practical purposes,[1] the photographer can find no excuse when he makes a large error in the time of exposure through failing to use an exposure-meter, the price of which will not exceed that of two or three dozen plates or films, and may be much less than this.

In order to obtain the maximum benefit it is necessary to choose an exposure-meter based on a logical principle. In the following paragraphs we will describe the principle of the various types of instruments constructed for the determination of the time of exposure.[2]

324. Actinometers.[3] By exposing a piece of sensitive paper of standard quality to light, and measuring the time taken to produce a tint identical with a standard comparative tint, it can be assumed, to a close approximation, that the inverse of the time of printing-out is a measure of the intensity of light, at the point at which the paper is exposed (Soleil, 1842; Bunsen and Roscoe, 1862).

Such devices, combined with a calculator which converts the time taken to print out into the time of exposure, were introduced into photographic practice by A. Watkins (1893).

If the speed of the sensitive paper is constantly proportional to that of the emulsion employed, which assumes that they possess similar chromatic sensitivities and identical laws of darkening, then the time taken by the paper to reach the standard tint, when the actinometer is placed in the subject perpendicular to the optical axis, will be constantly proportional to one of the times of exposure which would be suitable for the reproduction of a scale of tints, ranging from black to white, placed in the same position with respect to the camera as the actinometer. It is assumed that the scale of tints is kept at a constant distance from the camera (or at a distance sufficiently great as to have no effect on the time of exposure) and that the lens is used always at the same relative aperture. It is an easy matter to calculate the equivalent time of exposure, if any one of these factors be altered, or if an emulsion of different sensitivity be used.

Now, if a scale of tints momentarily attached to the subject is correctly reproduced, then the subject also will most probably be correctly reproduced. In the many cases where the time of exposure is determined by the intensity of the shadows of the subject, which is most usually the case with photographs taken at a short distance, the correct position for the actinometer will be in the shadow (the shadow of the subject, or, more easily, the shadow of the operator); when dealing with panoramic views without foreground or very contrasty subjects, where it is only possible to regulate the time of exposure according to the high-lights of the subject, the actinometer must be exposed to the sun.[1] In either case, as already pointed out, it must be directed towards the camera.

It is obvious that none of the conditions we have assumed is rigorously fulfilled (in particular, the sensitive materials vary considerably in sensitivity from one make to another), yet, owing to the fact that the range covered by normal exposures is a fairly extended one, the

[1] Owing to the disproportion between the intensities of visible rays and of infra-red in daylight, exposures for infra-red photography can be measured only by means of a photo-electric exposure meter of which cell, sensitive to infra-red, must be covered with a filter identical to the one mounted on the lens. The exposure meter must be specially scaled.

[2] A systematic comparison of a large number of exposure-meters of German, English, and French origin, made in 1915 at Prague Technical School, by J. Milbauer, showed, over a very wide range of different cases, the following proportions of complete and semi-successes—

	Successes	Semi-successes
Actinometers, using print-out paper	77%	10%
Actinometers, appearance of image type	57%	13%
Extinction (visual) exposure meters	45%	28%
Tables and calculators	54%	5%

[3] Actinometer papers differ from the usual direct print-out papers, which contain silver chloride in presence of excess of silver nitrate as the sensitive substance, in that they contain no silver nitrate (this salt does not allow the paper to be stored for any length of time). They usually contain either silver bromide or iodide to which is added a chemical sensitizer, such as sodium nitrite, tannin, etc.

[1] The actinometer may even in this case be exposed in the shadow, in order to avoid a too rapid darkening of the paper, which renders the measurement of the *actinometer time* (time of darkening) very difficult; it is then necessary, however, to divide the time of exposure calculated in this manner by a suitable number determined from a large number of experiments. The same procedure must be followed in those cases, such as photographs taken against the light, where no logical position can be assigned to the actinometer.

indications furnished by the actinometer lead in the majority of cases to satisfactory negatives. Objection may be made even to this method for the measurement of the time of exposure, since in very bad light the actinometric time, as well as the time of exposure, is very prolonged,[1] so that wide variations may occur between the beginning and the end of the exposure. It is more especially with interior subjects that this objection is valid, but it may be easily met by choosing an aperture such that the time of exposure will be equal to the actinometer time. The exposure is then started at the same time as the paper is uncovered, and continued until the standard comparison tint is reached, the actinometer then functioning as a light integrator, thus permitting the exposures to be ascertained however much the source of light may fluctuate.

The actinometer is normally used in conjunction with a table indicating the relative sensitivities of most plates and films, and a calculator which converts the time of exposure determined for any one aperture into the equivalent time of exposure for any other aperture.

These instruments are usually arranged to indicate the minimum time of exposure. However, in order to allow for the various sources of error, and taking into account the fact that errors on the over-exposure side are less prejudicial to the final rendering than errors on the under-exposure side, it is advisable, for all subjects other than those of exceptional contrast, to double the time of exposure calculated from the actinometer.[2] Do not omit, where it is necessary, to take into account the coefficient of the colour filter employed.

In the Wynne actinometer, the number of divided scales on the calculator has been reduced to two, owing to the choice of a very ingenious method of expressing numerically the speed of the various plates or films. If a certain emulsion is said to have a (mean) sensitivity of $F/90$, then the minimum time of exposure for this emulsion on a sufficiently distant subject, with the aperture stopped down to $F/90$, would be equal to the actinometer time. On this

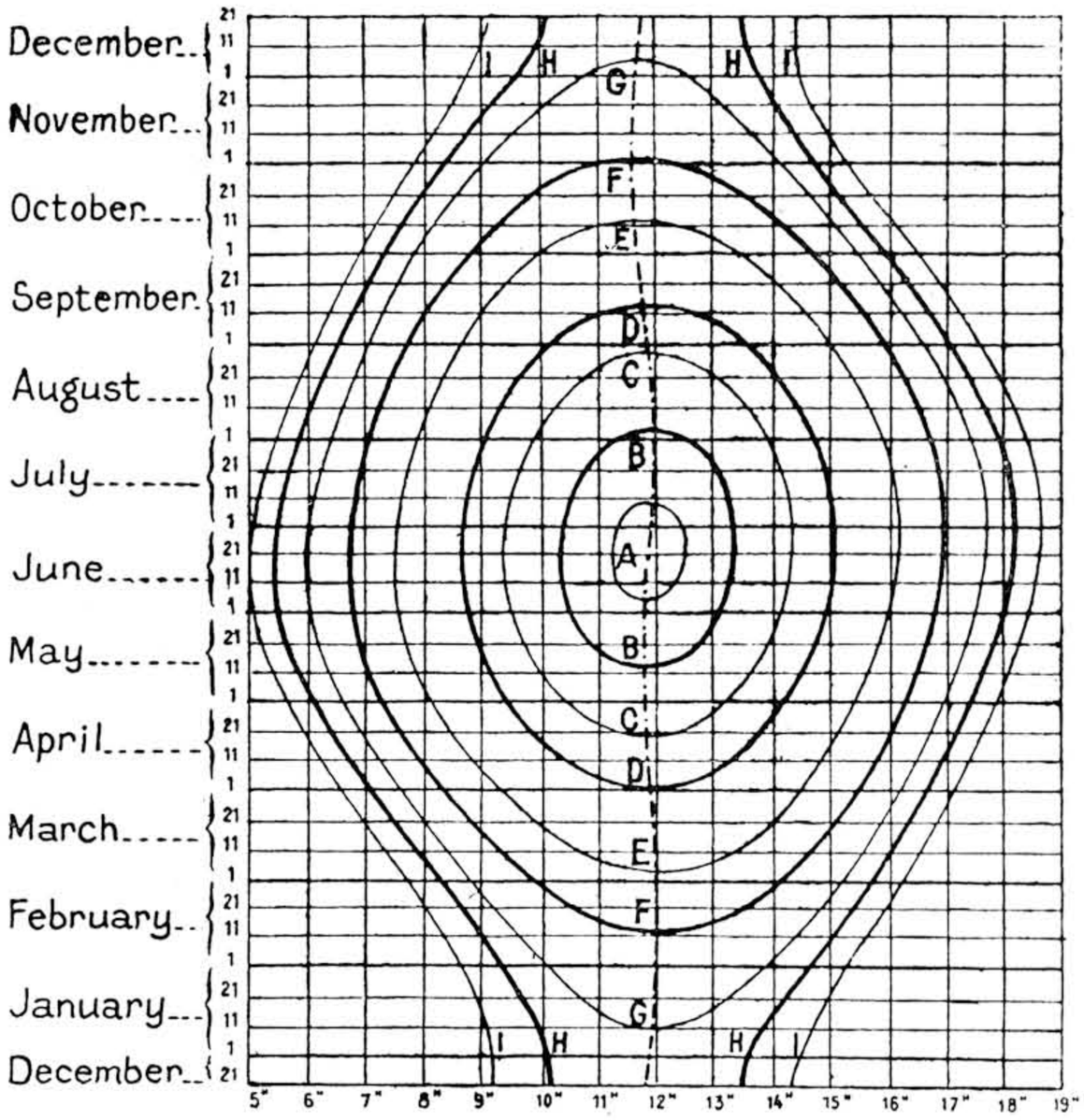

FIG. 169. CURVES OF EQUAL LIGHT-VALUES
(Greenwich Mean Time)

basis, one of the scales is used both for the sensitivities and the apertures, while the other indicates both the actinometer time and the time of exposure (both being expressed in the same units). By bringing the observed actinometer time opposite the sensitivity of the emulsion (indicated on a table supplied with the meter) the times of exposure corresponding to the various apertures are then found opposite to one another.[1]

[1] In order to shorten the preliminary operation, the actinometers usually contain an auxiliary comparison tint which the paper reaches, during the darkening process, in one quarter of the actinometer time. (Let it be noted in this connection that in very bad light photometers and exposure tables give only very doubtful indications.) When judging the equality of the tints, attention should be paid to the depth of the tint rather than to its colour, which varies slightly according to circumstances. The actinometer should, therefore, be held at arm's length with the eyes partly closed.

[2] This last recommendation does not apply to reversible emulsions (Autochrome, amateur cinematograph films), in which the latitude of exposure is very restricted. In these cases the time of exposure indicated by the actinometer, after making any of the necessary corrections for distance or for exceptional subjects, should be adopted.

[1] Mention may be made of the type of actinometer in which the paper is exposed for a fixed time in a very compact small camera directed towards the subject. The depth of the image so formed (sky excepted) is matched with one of a numbered scale of tints, and the optimum time of exposure corresponding to the number so obtained is then read off from a table. Since these actinometers measure the luminosity of the image, and not the intensity of the subject, they are based on an inexact principle (§ 319, footnote).

325. Photo-electric Exposure Meters. The advances made in the construction of dry photo-voltaic cells[1], which emit under the influence of light an electric current sufficiently strong to be measured without the need for amplifiers, has made it possible, by associating such a cell with a specially graduated micro-ammeter, to produce luxmeters and then, by observing certain precautions, exposure meters in the precision and automatic character of which there is sometimes an exaggerated belief.

The sensitivity of the cell is not always constant. In particular, a phenomenon of exhaustion appears if the selenium layer emits current for a long time under the influence of a strong light; sensitivity increases when the temperature rises; and, finally, the ammeter may be put out of order, unknown to the operator, through a knock or repeated vibrations.

Spectral sensitivity is not very different from that of the eye and is, therefore, very different from that of photographic emulsions. The use of a correcting filter would considerably reduce the sensitivity of the cell, for this filter would have to be very absorbent. The information given by a photo-electric exposure meter cannot therefore be more reliable than that of a good extinction meter.

While actinometers usually measure the light *received* by the subject, and extinction meters the light *reflected* by a given area of the subject, photo-electric exposure meters can be used either way, but the instruments supplied to photographers are arranged to measure the average intensity of the light reflected towards the lens by the whole of the subject and its setting.[2] To do this it is necessary to eliminate at least the major portion of the light reaching the cell from an angle exceeding that of the view angle of the camera; it is especially necessary to stop the light from the sky.[1] For this purpose the cell is fitted with a very deep hood, or with a cellular louvre, or with a ribbed glass that reflects totally very oblique beams; a convergent lens is sometimes placed in front of the louvre to concentrate the light on a cell of small size.

In photography with reversible emulsions, where the exposure depends only on the brightness of the lightest parts of the subject, a sheet of white paper or a sheet must be temporarily spread in the subject, and the cell must be brought sufficiently near to this screen to receive only the light reflected by it, the instrument having been calibrated in these conditions. As a matter of fact the use of the exposure meter in the usual conditions gives satisfactory results with a large number of open air scenes, having roughly the same range of extreme luminosities, but is at fault in the case of very contrasty subjects, and especially interiors.

In some cameras of recent construction a cell regulates automatically the opening of the iris diaphragm (cinema cameras with a fixed shutter speed, O. Riszdorfer, 1935), or indicates whether the adjustments made to the shutter and diaphragm are suited to the subject aimed at and to the speed of the sensitive emulsion. In this case, each of the adjustments, and, possibly, a pointer moving in front of a speed scale,[2] are linked up with a rheostat put in the circuit of the micro-ammeter or with an arrangement of shutters limiting the active area of the cell. The condition chosen are considered suitable when the pointer touches a fixed mark or the requisite line of a scale graduated in emulsion speeds.

[1] The most sensitive cells of this type are at present (1936) made by depositing on an iron strip forming the anode of the battery, a very thin layer of selenium, which in turn is covered by a transparent layer of silver forming the cathode. The sensitivity is about 120 micro-amperes per lumen, i.e. about 5 milli-amperes in sunshine for an active surface of about 4 cm. (1·6 in.) diameter. When the resistance of the exterior circuit (ammeter and, possibly, rheostats) is negligible (about 3 ohms) there is a proportion between the current emitted and the light received, up to about 2,500 lux. Sensitivity decreases when the resistance is increased. By raising this to about 1,000 ohms the current only varies slightly at medium illuminations, but it decreases a good deal in strong light (from 360 to 160 micro-amperes for an illumination of 2,500 lux). This is an advantage, as the scale can be less spaced without reducing accuracy in weak light (G. B. Harrison, 1933).

[2] To measure long exposures or long periods of copying, such as those occurring in photomechanical work, use is made of a light integrator formed by linking a cell (of comparatively large dimensions), placed at the side of the document to be reproduced or at the side of the copying frame, with an electric recorder which adds up on an appropriate scale the amounts of light received by the cell, irrespective of the fluctuations of the intensity of the light. If required the recorder can, by means of a relay, give a signal, close the shutter, or switch off the lamps, as soon as the cell has received a given amount of light.

[1] If a view-finder is not fitted there is always a fair degree of uncertainty regarding the direction in which a photo-electric meter is pointed when measuring the light unless the meter is an integral part of the camera.

[2] The adjustment for the emulsion speed can be worked automatically by projections placed in suitable position on the charger containing the film (J. Mihalyi, 1934).

326. Photometers or Extinction Exposure Meters. The commonest type of exposure meter used visually most usually employed for the determination of the time of exposure, consists of a neutral grey or deep-blue filter of varying density (prepared, for example, from a very acute-angled prism) through which the subject is viewed directly, the density of the filter being progressively increased until the outlines of the subject become submerged. A number indicating the illumination of the subject is read off from a pointer attached to the movable filter, and the time of exposure recommended for the working conditions adopted may then be obtained from a ready-reckoner usually fixed to the instrument. In spite of the precaution taken in some types of this instrument to fix a very small aperture in the eyepiece to counteract the error resulting from the dilation of the pupil in poor light,[1] it is impossible to compensate for the increase in sensitivity of the retina which occurs under the same conditions. This invariably leads to an over-estimation of the illumination of a poorly-lighted subject, and in consequence the choice of too short an exposure. It has often been proposed to reduce by a half the time of exposure found by this method in good light, and to double it in poor light.

Better results are obtained if the eye is kept at an almost constant adaptation, as, for instance, by surrounding the patch under examination by a larger area illuminated by the environmental light.

Other photometers, instead of being used for direct viewing of the subject, are applied to the focussing screen of the camera and are so arranged that gradually-increasing series of densities may be brought between the image of the subject and the eye of the observer, until the details in the region of interest just begin to disappear. The same objections apply to these instruments.[2]

[1] An exposure meter has been suggested, under the name of pupillo-photometer (Brynhi, 1910), based on the measurement of the diameter of the pupil, but the results are scarcely more satisfactory.

[2] Similar results may be obtained by darkening the image, not by the interposition of filters, but by closing the iris diaphragm (P. Delens, 1895). Having focussed the camera on the subject, the lens is closed until the shadow details which it is desired to reproduce just begin to disappear. (It is preferable, when using ordinary emulsions, to make the observation through a blue filter in order to compensate a little for the difference between the visual and actinic intensity of the light.) With this aperture, several negatives of the same subject are taken with varying times of exposure (preferably of exposures proportional to the numbers 1, 2, 4, 8, 16, . . .). After development, the best time of exposure can be easily ascertained for the particular emulsion in use, and it can be readily seen that this will be the most suitable exposure for any other subject if the aperture has been reduced until the shadow details just begin to disappear. It is then a simple matter to work out the time of exposure for any other aperture.

Exposure Tables

In Fig. 169 read the letter on the curve which passes nearest to the point corresponding to the date and the time. Then, in Table I under this letter, read the number which corresponds to the atmospheric conditions (thus, 1st May at 4 p.m., curve *F*; lightly-clouded sky; 10). Now, in Table II take the number referring to the particular type of subject (for example, group in the open: 11). In Table III find the number corresponding to the size of aperture (lens at *F*/5·6: 12). Finally, add these three numbers together, 10 + 11 + 12 = 33, and, in Table IV, read the time of exposure opposite this total ($\frac{1}{10}$th of a second).

TABLE I
Atmospheric Conditions

Letter written on curve, Fig. 169	A	B	C	D	E	F	G	H	I
Clear sky, bright sunshine	1	2	3	4	5	6	8	9	12
Weak sunlight	3	4	5	6	7	8	10	12	14
Sky lightly covered with white clouds	7	8	8	9	9	10	12	14	16
Overcast	9	10	10	11	12	13	15	17	20

The first line should only be used for very open subjects (panoramas, marine views, etc.) where the foreground is of no interest; in all other cases, use the second line instead.

TABLE II
Subjects

Sea or snow	1
Ships on sea, glaciers and rocks	6
Panoramic views—	
Without foliage	4
With foliage	6
Monuments, groups, street scenes	11
Near forest scenery	12
Shaded courtyards	14
Woodland scenes—	
Light	18
Dark	24

TABLE III
Diaphragm

F/1·5	0	*F*/4	9	*F*/8	15	*F*/22	24
F/2	3	*F*/4·5	10	*F*/9	16	*F*/32	27
F/3	6	*F*/5·6	12	*F*/11	18	*F*/45	30
F/3·5	7	*F*/6·3	13	*F*/16	21	*F*/64	33

N.B. For very near subjects, increase the total obtained by 1 to 6 units (the latter increase applies to the case of a small object reproduced in natural size).

TABLE IV

These exposure times apply to very fast roll-film (orthochromatic emulsions).

Total	Time of Exposure	Total	Time of Exposure
12	1/1000th of a sec.	43	1 sec.
15	1/500th ,, ,,	46	2 ,,
20	1/200th ,, ,,	49	4 ,,
23	1/100th ,, ,,	52	8 ,,
26	1/50th ,, ,,	55	16 ,,
28	1/25th ,, ,,	58	32 ,,
33	1/10th ,, ,,	61	1 min.
36	1/5th ,, ,,	64	2 ,,
40	1/2th ,, ,,	67	4 ,,

The objections made to extinction exposure meters do not apply to the actual photometers in which the lighting or brilliancy of any chosen portion of the subject is compared with a known lighting or brilliancy. The best results are then obtained by measuring the brilliancy of the darkest part that must be differentiated from black (or, in the case of reversible emulsions,[1] by measuring the brilliancy of the lightest part that must be differentiated from pure white); the standard of comparison may be, for instance, the brightness of the filament of a miniature electric lamp with a variable current supply, or that of a screen kept luminous by radio-active salts, the equivalence of the two areas to be compared being obtained by moving a neutral grey wedge, suitably graduated, or, possibly, by adjusting a diaphragm if instead of inspecting directly one of the areas, its image, formed by a lens, is inspected.

327. Exposure Tables. The tables indicate the probable time of exposure under conditions which, in as far as it is possible to define the state of sky and the characteristics of a subject by a few words, are comparable to those under which it is proposed to operate. They are, above all, useful to the beginner, who, in his first attempts, has no idea as to whether the exposure should be of the order of a second or of a minute. They are also of service to those who take up photography only occasionally, and can hardly therefore make use of past experience. We have already pointed out that the use of these exposure tables gives a probability of success about equal to that obtained by the use of a photometer.

The exposure tables indicate, in separate columns, the values of the light at various periods during the year, and at various hours of the day for different conditions of the sky, the factors corresponding to the different lens apertures, and those applicable to the different classes of subject according to the probable illumination of the shadow (near scenes) or of the high-lights (distant scenes). In some tables the numbers taken from each of the tables are multiplied together, their product representing the probable time of exposure for a certain type of emulsion. In other tables the numbers are added (an operation which is much more easily carried out in the head), a final table then indicating, opposite each of the possible totals, the corresponding times of exposure (Additive Number Tables of E. Huillard and E. Cousin, 1894). Finally, in other methods, the conditions relating to each of the factors are arranged along a scale or around a disc or circular calculator.

It is first essential to point out that an exposure table is only serviceable in the district for which it has been compiled, or at least for districts of the same latitude if due correction is made for the variation in time. Further, the tables are very unreliable in bad light. Usually they give no indication of the time of exposure necessary for interior work, for the number of special cases which arise makes any attempt at description impossible.

The exposure tables given here, which are calculated for the Paris[1] district, are also applicable, without any modifications (but with the reservations mentioned in the previous

[1] Having measured a luminosity of the subject very close to the maximum luminosity, the use of the adjustment advocated would lead to the placing of that area towards the middle of the straight portion of the density curve and not, as would be desirable, in the upper portion. The range of the luminosities that a reversible emulsion can distinguish being near to 100, it is necessary to multiply by 10 the exposure (or area of diaphragm) indicated. No correction would be needed if, for this particular use, the window of the photometer were fitted with a grey filter of density 1 (P. C. Smethurst, 1935).

[1] The curves in Fig. 169, which supply the data for use in the table headed *Atmospheric Conditions*, each refer to a definite height of the sun above the horizon. This may readily be determined by measuring the length of the shadow cast on a horizontal plane by a stick one yard in length. Such values corresponding to this series of curves are given in the following table under their respective letters. It should thus be an easy matter to extend the use of these tables to other regions.

Curve	A	B	C	D	E	F	G	H	I
Lengths of the shadow of a stick one yard in length	0·5	0·6	0·8	1	1·5	2	3	4	6 yds.

paragraph) to the north and centre of France. and to the south of England. The values should be increased in the north and decreased in the south. Do not omit, when summer-time is in force, to subtract one hour from the time indicated by watches and clocks, in order to obtain the true time.

328. The Exposure. Having determined the time of exposure, set the shutter to the " speed " which approximates most closely to the required value. Place the plate-holder in position, withdraw the slide, and then release the shutter.

As a general rule, times of exposure exceeding $\frac{1}{10}$th second cannot be given unless the camera is fixed on a tripod or some equivalent support. The beginner will be wise to refrain from giving any exposures exceeding $\frac{1}{20}$th second with the camera held in the hands.

When working with a hand camera, the elbows should be pressed firmly against the body to form a support for the forearms,[1] and the breath should be held at the moment of releasing the shutter.

As soon as possible after the exposure, replace the slide, and remove the plate-holder (or, in the case of a changing box, change the exposed plate or film without delay).

The beginner and those who are using a new camera for the first time, or a type of emulsion to which they are unaccustomed, cannot be too strongly advised to make a note after each exposure of the conditions under which the operation was carried out (lens aperture, the time of day, exposure-meter reading or description of the atmospheric conditions, colour filter used, time of exposure), in order that any errors which arise may be readily corrected in the future.

It is also advisable, when taking consecutive photographs of a series of subjects which cannot be readily identified, to note down any necessary information concerning each subject. This will avoid confusion in identifying the negatives.

[1] Folding cameras of the Klapp type can often be supported with one hand, the camera being supported in the crook of the arm. The other hand is thus left free for any other manipulation as, for example, the release of a flash.

CHAPTER XXVII

DESENSITIZING OF PHOTOGRAPHIC EMULSIONS

329. Use of Coloured Developers. Carey-Lea, as far back as 1877, showed that after immersing a photographic plate in ferrous oxalate developer it was possible, without risk of fog, to illuminate the dark-room much more brightly than would have been possible during the handling of the same plate when dry. This effect was attributed to the orange-red colouration of the developer,[1] and little attention was paid to it, since the emulsions were so insensitive that in all cases a bright illumination could be used.

About 1889 various attempts were made to introduce into photographic practice the use of developers which had been coloured red by the addition of certain dyes, these dyes being subsequently destroyed in an acid fixing bath (coralline, croceine). The method, however, was not successful, since the dyes transmitted both blue and violet light. In 1900 A. and L. Lumière and A. Seyewetz, with the same object in view, recommended the use of an orange-coloured compound, magnesium picrate, which allows the development to be observed at a distance of about 18 in. from a candle or at about 5 ft. from a 16 c.p. lamp, provided development is sufficiently rapid and the plate remains covered by a layer of developer about $\frac{1}{2}$ in. thick. If these distances are doubled, it is possible to remove the negative from the bath and examine it very quickly by transmitted light. This method of working, although it afforded interesting demonstrations, was not used in practice.

330. Loss in Sensitivity of Emulsions Impregnated with Developer. After the use of organic developing agents had become general, it was frequently pointed out that after the developing bath had thoroughly impregnated the emulsion a considerable lowering of sensitivity took place, which could not be explained in these cases by any colouration of the bath. In 1901 Lüppo Cramer carried out some experiments in this direction (using the different developing agents) and discovered that this action occurred with nearly all the most common developers (with the exception of hydroquinone), both in plain and alkaline solutions, and that sulphite tended to reduce the effect. In 1920 the same worker found a very marked reduction in the sensitivity of photographic emulsions[1] (reduced to 1/50th or 1/100th of the original value) after they had been bathed for about 1 minute in a pure solution of diaminophenol-hydrochloride of from 0·02 to 0·05 per cent strength, although no reduction in the latent image resulted from this treatment. An analogous effect may be obtained by the addition of this product to a hydroquinone developer; it was soon recognized that this *desensitizing* was due to traces of oxidation products, which are rapidly formed by the action of the air on dilute solutions of this developer.

331. Desensitizers. During further experiments on this phenomenon, Lüppo Cramer discovered, several months later, the remarkable desensitizing properties of phenosafranine, a violet-red dye of considerable tinctorial power.

It was soon shown that the desensitizing properties of phenosafranine are possessed by various safranines and, in varying degree, by different substances of similar constitution. The red colour of some of these substances might lead to the supposition that the protection from fog is due to the absorption of the active radiations by the dye impregnating the emulsion. This is not the case, however, for the efficiency of these desensitizers is practically as great with panchromatic as with ordinary emulsions, and, secondly, a sensitive plate exposed behind a cell containing a solution of the dye, even in concentration greater than that

[1] It has since been recognized that ferrous oxalate developer is a very efficient desensitizer.

[1] R. Freund (1908) showed that the sensitivity of a sensitive plate was completely destroyed by treatment with a solution of potassium iodide, so much so that development could be carried out even in very bright white light, but at the same time a marked weakening of the latent image occurred. Since then F. F. Renwick (1920) has shown that it is possible to avoid any destruction of the latent image by the addition of certain substances to the iodide. The solution recommended contains, per 20 oz., 90 gr. of potassium iodide, 90 gr. of anhydrous sodium sulphite, and 260 gr. of potassium sulphocyanide. After several minutes' immersion, the plate is rinsed. Development can then be carried out, even in sunlight, with any ordinary diaminophenol developer made up with sodium carbonate just before use. It should be added, however, that although these experiments may be of interest, total desensitizing does not present any advantages over the methods of partial desensitizing which are to be described.

used for desensitization, and under a layer of greater thickness than that of the developing bath, develops an intense fog. This is due to the fact that the red safranines absorb very little of the violet radiations. It was discovered not long afterwards that certain violet dyes belonging to the safranine family were capable of acting as efficient desensitizers.

The first experiments were carried out with 1 : 200 solutions, in which the sensitive plate was bathed for 1 minute. At the end of this time the dark-room may be illuminated as brightly as required, provided the blue and violet radiations are absorbed by a yellow or orange filter. A yellow light-source of feeble intensity, such as a candle or petrol flame, may be brought quite close to the dish in which the development is taking place, and it is even possible to examine the negative by transmitted light as frequently and for as long as required during the course of development.

Almost immediately it was shown that desensitizing could be brought about with even the much more dilute solutions of 1 : 20,000 and 1 : 50,000, so long as moderate intensity of illumination is observed in the dark-room, either as a bath before development or in the developer itself.[1]

With either of the two methods of desensitizing, safranine prevents or reduces considerably the development fog,[2] so that it is possible, when necessary, to extend development beyond the limits usually fixed by the growth of the fog, and also to use a much more alkaline developer. Finally, hydroquinone developer, which works somewhat slowly in the normal state, acquires almost the properties of a rapid developer, such as metol.

The only defect of safranine is its strong staining action, which causes a considerable colouration of the fingers (more particularly the nails) and of the gelatine, especially if it has been used in the concentrations which were first recommended. The colouration of the gelatine is removed for the most part during the subsequent manipulations and the washing, any defects in this last process being very clearly shown by the unequal colouration of the different parts of the plate. This colouration, however, even when it is fairly intense or irregular, does not affect printing adversely, and may therefore be ignored.

The most useful employment of desensitizing is emphatically with panchromatic plates, which in the past have had to be developed in practically complete darkness, but which now, after desensitizing in a preliminary bath, or in the developer itself, may be developed in a much brighter light than that previously used for ordinary emulsions.[1]

All desensitizers are not, however, suited to all emulsions which are panchromatic, or sensitive to infra-red, probably owing to reactions between the colour sensitizers and the desensitizer. The effect of a given dye on a given emulsion varies greatly from one spectral region to another.

Many contradictions may be noted in publications on the properties of desentizers owing to the use in experiments of impure or wrongly labelled products. A large number of substances which are energetic desensitizers in plain aqueous solutions are unusable in practice, the desensitization being annulled or decreased during development by the action of one or other of the components of the developer[2]; tests of a desensitizer must therefore include a practical development test in an abundance of yellow light (Miss F. M. Hamer, 1931).

332. The systematic study of a large number of dyes undertaken by various workers has shown that the number of basic dyes which exercise this narcosis or numbing effect on silver bromide emulsions is very considerable. Although certain of them desensitize the emulsion, others cause fog. Others either desensitize or fog the emulsion, according to the concentration of the solution employed. Methylene blue, for example, at a concentration of 1 : 1,000,000,000 (1 grm. in 1,000 cubic metres of water), exerts an appreciable desensitizing

[1] Safranine is precipitated by developers containing hydroquinone or pyrogallol. It cannot be added to concentrated solutions of other developers, but only to the diluted bath ready for use, and even then it can only be introduced when in a very diluted form itself (at most 1 : 2,000).

[2] Desensitizers, and particularly Basic Scarlet N (§ 332), although they may not reduce the so-called chemical fog, at least suppress the aerial oxidation fog which occurs when emulsion, impregnated with developer, is left in contact with the air for any length of time, as, for example, during the examination of the negative while development is in progress. This fog is formed particularly with developers containing hydroquinone (E. Fuchs, 1924).

[1] Avoid the use of a green light with a red desensitizing dye, or vice versa, since the negative appears uniformly black during the course of development.

[2] Failures have been obtained on many occasions while using an acid diaminophenol developer for desensitized plates and films. It is necessary in this case to use only dilute solutions of the diaminophenol-hydrochloride for the desensitizing.

action, although admittedly far from complete (at such a degree of dilution the solution is absolutely colourless), but at a concentration about a thousand times greater produces a marked amount of fog. Others weaken the latent image[1] to a greater or less extent.

Among the desensitizers which do not belong to the safranine group we may mention the following: rhoduline red, auramine, chrysoidine, fuchsine (Lüppo-Cramer), tolulyl red, aurantia[2] (A. and L. Lumière and A. Seyewetz, 1921), a green non-tinctorial mixture of secret composition, supplied commercially under the name of pinacryptol green (E. Koenig, 1922), which possesses desensitizing properties equal to those of the safranines, but which, at least with certain emulsions, increases the chemical fog instead of diminishing it; finally, there is a red dye, which has all the properties of safranine and, above all, stains the fingers, nails, and gelatine only very feebly, namely, basic scarlet N (Cie. Nat. des Matières Colorantes), first recommended in 1924 by the Pathé-Cinéma Laboratories.[3]

The desensitizing power (ratio of the sensitivities before and after treatment) varies with the concentration. In concentrations of about 1 : 5,000 it is approximately 100 for safranine, pinacryptol green, and basic scarlet N,[4] and for the other dyes mentioned[5] it is considerably lower. In very dilute solutions, the desensitizing power is markedly reduced; it is only 10 for safranine in concentrations of about 1 : 1,000,000.

At the usual solution strengths desensitization increases with the duration of the treatment, first very rapidly and then more and more slowly. Prolonged washing of a desensitized photographic emulsion diminishes the desensitization without annulling it.

333. Practical Methods of Desensitizing. In order to obtain the maximum advantages from the use of desensitizing methods, there should be two systems of illumination in the darkroom, with arrangements for changing rapidly from one to the other (different lamps or different current supply), or an arrangement by means of which an additional safe light may be removed from the front of a permanent yellow screen. It should be pointed out that, even in a darkroom different parts of which are being used for different operations (many operators working separately, or the treatment of cinematograph films in continuous machines), the elimination of oxidation fog is a sufficient advantage in itself to make the adoption of desensitizing, either before or during development, worth while.[2]

When choosing a desensitizer, it is necessary to remember that coloured desensitizers, even those which are most easily removed, are generally held very strongly by paper fibres. It is therefore necessary, for the treatment of paper negatives, to choose either a colourless desensitizer, or one which has already been

[1] Prolonged action of red light causes in all cases a marked regression of the latent image. Also, the latent image is very much weakened if, after desensitizing, the plate is left for a long while before development.

[2] In many cases skin eruptions, similar to burns, with eczematous eruptions have been caused through handling solutions of aurantia; it is, therefore, wise, when using this desensitizer, to prevent the solution from coming into contact with the fingers (by using developing frames or rubber finger-stalls).

[3] Basic scarlet N is a mixture of approximately equal weights of a safranine and chrysoidine. This latter, when used by itself, stains the skin and the nails very strongly. The Pathé-Cinéma Laboratories have also shown that the fog caused by certain desensitizers may be avoided by adding to their solution in suitable amounts other dyes which do not affect the desensitizing but exercise a strong retarding action on the fog; acridine yellow, for example, prevents the fog caused by methylene blue.

[4] The values of the desensitizing power given above refer to illumination by white light. The chromatic sensitivity of orthochromatic and panchromatic emulsions is lowered proportionally to a much greater extent than their sensitivity to the blue.

[5] Lüppo-Cramer attributes desensitizing to the weak oxidizing properties of all substances acting as desensitizers (they all can be reduced by hydrosulphites), these properties permitting them to retard considerably the formation of nascent silver, although they are unable to attack any silver which has been formed previously. Some facts appear to confirm this hypothesis; in slightly acid solution in the presence of a bromide, the latent image is destroyed. Some investigations of Sihvonen and Baur on the mechanism of photochemical reactions enable the rôle of a desensitizer to be interpreted as follows: The energy received by the silver bromide is transferred to the desensitizer, this substance alone being decomposed; this would explain why with very long exposures desensitization no longer protects the silver halide, the adsorbed dye having been completely destroyed. Desensitizers are ineffective in an atmosphere without oxygen or in a vacuum (Frln. M. Blau and H. Wambacher, 1934). It is an interesting fact that a uniformly fogged plate, if treated with a dilute solution of safranine (for example) containing potassium bromide, then put to dry without intermediate rinsing, will give, by exposure to light followed by development, a positive image. The first latent image is destroyed by the second exposure, the effect being more marked with increase in the second exposure.

[2] It is for this reason that desensitizing is carried out on the commercial scale with positive films, which in ordinary circumstances could be handled in light of sufficient intensity for the superintendence of the operations.

shown to be readily eliminated. If the desensitizer is miscible with the particular developer in use, less efficient desensitization is obtained, for equal concentrations, by the use of a combined bath than by preliminary treatment before development (Miss F. M. Hamer, 1929), although the reverse has frequently been stated. In all those cases, however, in which the sensitive layer is wetted previous to development (cinematograph films are treated in this manner, to prevent the adherence of air bubbles) the desensitizing may be combined with this preliminary treatment.[1]

The desensitizer may be employed in solution of increasing dilution according as the intensity of illumination in the dark-room is cut down. Whatever method is used for the use of the desensitizer, one minute must be allowed for its penetration through the layer of an ordinary plate or film, and a little longer in the case of multiple-coated emulsions and very thick layers.

Basic Scarlet N 1 : 5,000 gives excellent results, the solution requiring to be frequently renewed. It is made up by diluting a stock 1 : 500 solution, which latter keeps well if a little formaline (about 20 min. per 20 oz.) be added.

It is necessary to make allowance for the fact that desensitizing usually modifies the time of development required to reach a given degree of contrast, and affects the time of appearance of the image and the time required for its complete development to a different extent (sometimes in an inverse manner). The method of estimating the time of development from a measurement of the time of appearance of the first details of the image (Watkins method, § 384), is only applicable if the desensitizer is added to the developer.[1]

[1] The desensitizing baths may be used a considerable number of times, but any baths which have been left unused in the dishes for any length of time generally contain a certain amount of suspended matter (residues from evaporation, dust particles, products formed by slow reaction with the calcium salts in the water used for dilution), which may cause spots on the sensitive film. After use, solutions of pinacryptol green often throw down a gelatinous precipitate resulting from the coagulation of the dye, owing to the accumulation in the bath of potassium bromide yielded up by the emulsions that have been treated. It is, therefore, necessary to make sure that the bath is quite clear; if it is not satisfactory it must be filtered.

[1] The " factors " of the different developers require to be modified in the following manner—the " factor " for hydroquinone developers should be multiplied by 4, for metol-hydroquinone developers it remains the same, while for pyrogallol or diaminophenol developers it is reduced by a third (R. E. Crowther, 1921).

CHAPTER XXVIII

THE DEVELOPMENT OF THE NEGATIVE

In this chapter the subject is treated under the following heads: (*a*) General Principles; (*b*) Inorganic Developers; (*c*) Organic Developers; (*d*) Substances chiefly used in making Developing Solutions; (*e*) General Practice of Development; (*f*) Various Methods of Development; (*g*) Tests of a Developer; and (*h*) Physical Development, before or after Fixing.

(*a*) General Principles

334. Chemical Development. Chemical development by means of a solution of pyrogallol, made alkaline with ammonia or ammonium carbonate, was used for dry-collodion plates as early as 1862, and has been used for gelatino-bromide emulsions since their first introduction. Since 1877, when Carey Lea introduced a solution of ferrous oxalate, the number of developers in use has continually increased.

During development, the silver bromide[1] of the grains which have been affected by light is converted (i.e. reduced) into black metallic silver, which constitutes the final image,[2] whilst the bromine goes to form hydrobromic acid, which would soon arrest development unless it were converted into a less active bromide by reaction with one of the constituents of the developer.

A developer is thus always a reducing mixture, using the word in its chemical sense, but all reducers cannot be used as developers. Some would reduce the grains of silver bromide to metallic silver irrespective of whether they had been affected by light or not. Others, on the contrary, would not be active enough to reduce even the exposed silver bromide.[3] Within the limits of *reducing power* (or to use the correct term, *reduction potential*) over which a reducer can be used as a developer, there are very marked differences in the action on silver bromide grains which have received only a very small exposure, these grains being reduced by the most active developers, but not by those of low reduction potential.[1]

No visible change occurs at first when a sensitive emulsion which has been exposed to light is placed in a developing solution. The liquid must have time to penetrate the gelatine, to diffuse within it, and to swell it before reaching the grain of silver bromide on which it has to react. Nor is this latter reaction instantaneous. Chemical progress has not belied the old adage of the alchemists, "Substances react only when dissolved," and traces of silver bromide must be dissolved in the developer before reduction can occur. And this reduction must even proceed until the solution is saturated with reduced silver before the latter can begin to deposit itself on the germs of the latent image.[2] This delay in the appearance of the image (*induction period*) is still further increased by the fact that the image does not become visible (especially in a dim light) until it has acquired a certain degree of density.

[1] For simplicity we speak only of silver bromide; the silver iodide associated with it behaves in the same manner, but the alkaline iodide formed as a by-product reacts on the as yet undeveloped silver bromide nearby, and transforms it superficially into silver iodide which is more resistant to chemical fog, a very small portion of the iodide being diffused in the developer (M. L. Dundon and A. E. Ballard, 1929).

[2] At the end of the different processes involved in its production the photographic image contains sometimes appreciable traces of silver iodide; and sometimes also of silver sulphide (formed during fixation).

[3] There is even a developer (solution of sodium sulphite containing the sodium salt of quinone sulphonic acid) which develops the latent image in gelatino-chloride emulsions, but cannot develop the latent image in gelatino-bromide (Lumière and Seyewetz, 1911). In studying the positive processes it will be seen that developers used for gelatino-bromide emulsions should always have their potential lowered (by the addition of soluble bromide) when they are required for the more easily reducible gelatino-chloride emulsions.

[1] The differences between the activities of different developers as regards their power to show up the weakest light impressions (shadow detail in a greatly under-exposed plate) are particularly marked in the case of very slow emulsions; in ultra-rapid emulsions the differences are much less striking. Thus, using a lantern-plate emulsion, E. R. Bullock (1926) was able to develop with *metol* parts of the image which had received one-quarter of the exposure of those which were brought out by development with *hydroquinone*, whereas with very rapid emulsions the relation between the exposures developable by these two agents was only 1 : 2. The order in which developers are classed from this point of view is not affected to any appreciable extent by variations in the composition of the working solution (greater or less alkalinity, presence of various amounts of soluble bromides) which do, however, have a marked effect on the reduction potential.

[2] The various phases of this reaction are simultaneous, the last occurring near the free surface of the emulsion while the first is beginning in the deep layers.

From the moment that the image has begun to appear, its density increases progressively, but with a constantly decreasing speed.[1] This speed varies according to various conditions, e.g. composition of the developing solution, its concentration and temperature. It also varies, and often very appreciably, from one emulsion to another, and even with successive batches of a given type of emulsion.

335. Theory of Development. The theory, advanced by J. Waterhouse (1891), that phenomena of an electrolytic nature occur in development is based on the fact that t is possible to develop images by coating the film of emulsion on a silver plate used as a cathode in the electrolysis of weakly ammoniacal water (P. Chenevier 1894; E. Banks, 1896) and on the facts, observed by A. von Hübl (1901), that the duration of development is almost exactly proportional to the electric resistance of the bath (both with ferrous oxalate and the various organic developers), and that with alkaline developers the alkalis must be substituted for each other, not in the ratio of their chemical equivalence nor in that of the amounts of heat produced in their neutralization, but in quantities affording a mixture of the same resistance.

It is known that electrolytic phenomena manifest themselves when a couple formed of two bodies in contact, differing from each other in their chemical or physical properties, is immersed in an electrolyte. And it is also known that the grain of silver bromide affected by light is not homogeneous, the germs of the latent image differing in some way from the remainder of the grain. When an emulsion is placed in the developing solution which is always an electrolyte, electrolysis, limited to each grain under consideration, may therefore be produced. In order that the reaction shall continue, it is necessary for the electrolyte to contain a depolarizer, capable of fixing the oxygen which would tend to accumulate at the anode (J. Desalme, 1910), and it is precisely this part that is played by the developer proper.

336. Effect of Dissolved Bromide in the Developing Solution. In the early days of the gelatino-bromide plate, development almost always required to be done in a solution containing soluble bromides (usually potassium bromide) to delay and slow down the development of chemical fog. The progress made in the manufacture of emulsions, the fact that they are always protected by traces of bromide, added when they are re-melted, and the possibility of avoiding oxidation fog by selecting suitable desensitizers, all render the addition of a bromide to the developing solution unnecessary in many cases. Indeed, it will be seen that the development of a negative in a bath containing bromide gives very nearly the same result as would be obtained by developing in a bath containing no bromide a negative of the same subject taken under the same conditions on a less sensitive emulsion (or with a shorter exposure on the same emulsion). A number of modern emulsions only show their extreme sensitiveness when developed in a bath made up without bromide, or, if a very high-potential developer be used, with only the merest trace of bromide, such a developer being less susceptible to the action of bromides.

The presence of dissolved bromide lowers the already poor solubility of silver bromide in a developing bath, and it would seem that this property is responsible, at least in part, for the slowing of development, it being known that the reaction between dissolved salts take place more speedily as the concentrations are higher.[1]

The various developers differ very considerably as regards the effect of dissolved bromide. In the same way that the power of a motor-car may be measured by the effect of a hill on its speed, so the reduction potential of a developer can be measured (at least in relative terms) by the effect of a given content of bromide on the speed of development.

Contrary to an opinion sometimes expressed, the chlorides cannot, no matter in what quantities, play the part of bromides, even on emulsions of silver chloride; the chlorides are absolutely ineffective in a developer either containing bromide or not (E. Weyde, 1933).

[1] In a sufficiently concentrated developer, at any instant the speed of development is proportional to the difference between the maximum density (producible at the given part of the negative on *very long* development) and the density reached at the given instant of time.

[1] The action has been ascribed to the reversible nature of development. This interpretation is admissible in the case of development with ferrous oxalate where the bromide and ferric oxalate formed during development may re-convert part of the reduced silver into silver bromide, especially when the bromide concentration is high. But this is not the case with alkaline developers. While the mixture of bromide and of a quinone may still convert the silver into bromide (a reaction used in various processes of toning and intensification), it is well established that organic developers, when oxidizing in a developing solution, do not give rise to quinones, but to complex products with which this reverse reaction is not possible.

Citrates, tartrates, or boro-tartrates, either dissolved as such in the developing solution or formed in it by the addition of the corresponding acids, have, at equal doses, an action differing very little from that of bromides (L. Lobel, 1927).

6-*nitrobenziminazol* and some allied substances, when introduced into negative developers in the proportion 1/25,000, reduce fog as effectively as potassium bromide at a strength of 1/5,000 without causing the drop in speed dealt with below (A. P. H. Trivelli and E. C. Jensen, 1930).

337. The effect of bromide in a developer cannot be exactly described except by comparing the characteristic curves (§ 202) corresponding with negatives developed respectively in a bath containing no bromide and in the same bath with addition of bromide. In Fig. 170 there are shown the characteristic curves corresponding with the plates, exposed behind a step-wedge, which have been given the same exposure and have been developed, some for two minutes and the others for eight minutes, in a solution containing no potassium bromide (solid lines), and in two other lots of the same bath, one containing a small addition of bromide (dash lines) and the other a larger quantity of bromide (dotted lines). For the same time of development in all three solutions the parts of the image which are fully developed show the same degree of contrast, but the parts which have received the least light (corresponding with the shadow detail in the negative of a natural subject) are incompletely rendered in the negatives developed in the baths containing bromide, and this to a greater degree as the proportion of bromide is greater or the time of development is shorter.

As development proceeds, the straight lines forming the middle (straight) parts of the curves change their angular position around the points *A*, *B*, *C*. Each of these points corresponds with a given proportion of bromide, the *depression* of the curves being greater as the bromide content is larger.[1] (A. H. Nietz, 1922.) It will be readily understood that the horizontal distance between the curves corresponding to the same periods of development in baths with and without bromide decreases in proportion to the progress of development. Now, this horizontal distance is a measure of the ratio of the exposures required to yield equal densities. It will therefore be seen that the apparent loss of sensitiveness due to development in a bath with bromide decreases progressively (*regression of inertia*).

338. The action of bromide is therefore greatest on the shadow detail and on the dark half-tones, which in a bath containing bromide appear distinctly more slowly as compared with their appearance in a bath without bromide,[1] but this effect falls off progressively, becoming practically negligible when development is carried very far.

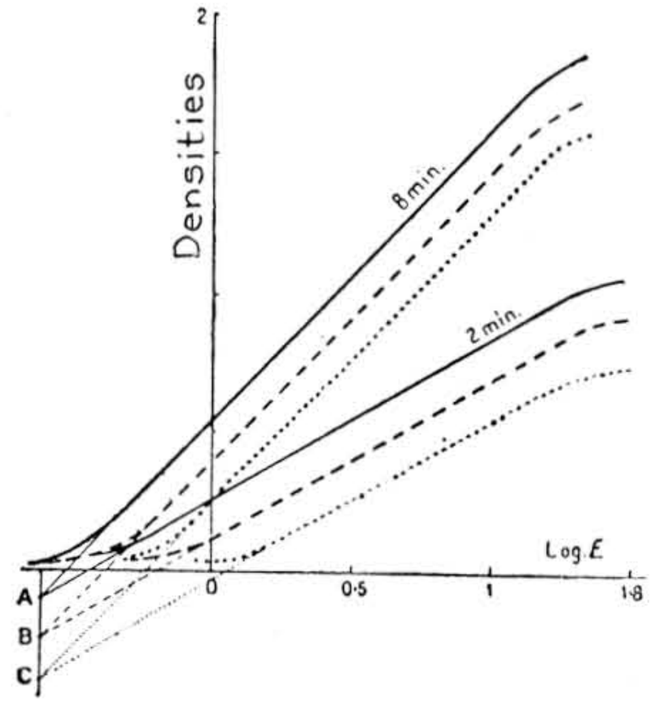

FIG. 170. ACTION OF BROMIDE IN DEVELOPMENT

This property of bromide provides a means for correcting over-exposure. To obtain the best advantage of this corrective, development must not be carried at all far, the negative being intensified afterwards, if necessary.

A negative, the development of which has started in a bromided bath and then continued in one without bromide, or vice versa, gives results intermediate between those obtained when using only one or the other of these developers. The effect of the soluble bromide is therefore not permanent, as would be the case if it partially destroyed the latent image; this effect seems to be a manifestation of the law of mass action, the dissolved bromide decreasing the solubility of the silver bromide or reducing its ionization, thus slowing down development (J. I. Crabtree, H. Parker, and H. D. Russell, 1933).

By reason of its action in preventing or considerably retarding the formation of chemical

[1] For each developer the depression is proportional to the logarithm of the bromide content. The points *A*, *B*, *C*, around which turn the curves corresponding with the various bromide contents in the same bath, come on a line perpendicular to the axis of the exposures (or, rather, of their logarithms).

[1] The difference in the times of appearance of the same tone, in negatives exposed under identical conditions, is proportional to the difference in the bromide contents.

fog, bromide enables development to be pushed farther than would be possible in a bath without bromide, thus obtaining the maximum contrast obtainable with the emulsion used. In this case bromide is generally used in fairly large doses.

It should be mentioned that, owing to the reduction of the silver bromide in the negatives developed in it, a used developing solution always contains some potassium bromide or sodium bromide, and in quantity increasing with the area of image which has been developed. It also contains oxidation products of the developer, the effect of which we shall study on a later page.

339. Chemical Fog. We have seen that during ripening (§ 192) some grains reach a state in which they are more easily reducible than others and can actually be developed without exposure to light. While chemical fog is often more marked in very rapid than in slow emulsions, there are exceedingly fast emulsions which are also extremely clean. Fog generally increases with the age of an emulsion. A very clean emulsion will fog in a badly compounded developer (excess of sulphite or of caustic alkalis), or one prepared with impure chemicals, or used at too high a temperature, unless a more or less large dose of bromide be added to such a bath.[1]

Contrary to a fairly widespread opinion, it is not, as a rule, the developers with a high reduction potential which give the greatest chemical fog. As a matter of fact, the following developers, Hydroquinone, Pyrogallol, Metol, Amidol, here placed in the order of increasing potential, stand in the reverse order as regards tendency to fog (A. H. Nietz, 1922). With high-potential developers the addition of bromide in moderate quantities retards the fog more than the image.

If two negatives which have had identical exposures are developed to the same degree of contrast, one in a concentrated developing solution, and the other in some of the same bath greatly diluted, it will nearly always be found that the negative developed in the weak bath is more fogged than the one developed in the strong one.[2]

[1] In some cases a developing solution which has been used gives less fog than a fresh one, even though the latter may contain more bromide than the used bath. This same effect may be obtained by adding to a new bath a small proportion (about 5 per cent) of a used one. (J. I. Crabtree, 1923) or traces of iodide (J. Southworth, 1929).

[2] Fog of a density of 0·2 (= opacity of 1·6, equivalent to an increase of 60 per cent in the time of printing) is usually considered as negligible; a fog of density equal to or greater than 0·3 (= opacity of at least 2, and equivalent to at least a doubled time of printing) is considered as appreciable; and finally fog of density equal to or greater than 0·6 (= opacity of at least 4, and calling for four times as long in printing) is properly termed " heavy."

Finally, chemical fog is markedly increased each time the sensitive film is taken out of the developer and exposed to contact with air, as when examining it. This *aerial fog* (which occurs in a most marked manner in the development of cinematograph films on a drum which is only partly immersed) seems to be due to a phenomenon of chemico-luminescence; it may be completely avoided by desensitizing (E. Fuchs, 1924).

340. Chemical fog appears more quickly and becomes more dense on an unexposed sensitive film placed in the developer than on one bearing a latent image, unless the bath contains a large proportion of bromide. In the case of an actual image, the fog is densest in the parts which have received the least light (shadow detail), its effect being almost nil in the high-lights. As a matter of fact, the development of the image gives rise to bromide in quantity proportional, at each point, to the density of the image already developed, and this bromide counteracts the formation of fog according as it is present in greater or less quantity at the particular point.

We have already learnt that the speed of development of the image proper decreases progressively. The rate at which fog grows also falls off, but less rapidly, with the result, in development, that the production of fog quickly overtakes that of the image proper.

Owing to the manner in which fog is formed in the image, the contrasts begin to decrease as soon as the fog has reached a certain value. Advantage is taken of this peculiarity to correct the excessive contrast which development of an under-exposed negative tends to produce. The use of a bath without bromide or with very little bromide, and to which an excess of alkali (preferably a caustic alkali) has been added, favours the rapid formation of a fog, which, however, tends to mask the less pronounced details of the image.

341. Effect of Dilution of the Developer. Slight dilution of the developer affects the speed of development and the formation of fog (§ 339). Considerable dilution may affect the character of the image to some extent.

In the case of a developer which is not directly

oxidized by air (glycin developer) identical results[1] are obtained by developing two identical exposures, one in a concentrated bath and the other in a portion of the same bath diluted twice, three times, . . . ten times, etc., if in the second instance the time of development is twice, three times, . . . ten times, etc., that in the strong bath.

When the developer is directly oxidized by air (and this is the case with all developers except glycin), a certain fraction of the developer is oxidized by the air dissolved in the water used to dilute the developer, and the concentration of the developer is therefore somewhat less than denoted by its degree of dilution. For this reason the equivalent times of development must be longer than those calculated proportionally to the degree of dilution. For instance, the highly concentrated commercial preparations of paraminophenol, which are usually used at a dilution of 1 : 20, if diluted to 1 : 100 (i.e. diluted a further five times), may require times of development from six to nine times as long, according to the degree of freedom of the water from air (B. T. J. Glover, 1923). Conditional upon always developing to the same gamma (§ 202) it seems that the inertia of the emulsion (§ 337) is not influenced by dilution (K. Tchibissof and V. Tcheltsof, 1929).

In the use of a *greatly* diluted developer,[2] the active products which penetrate the emulsion are rapidly exhausted in the superficial layers and are only replaced in the film with extreme slowness. In these circumstances, the image of the shadows, formed chiefly of grains at a slight depth (assuming that the light has acted on the free surface of the emulsion), where the developer has exhausted itself only slightly, may be quite completely developed whilst development is still incomplete in the image of the high-lights, distributed throughout almost the entire thickness of the film, for in regard to this latter the developer exhausts itself at the surface or at least takes up there an appreciable quantity of bromide before penetrating lower down (J. Sterry, 1900).

Advantage may be taken of this peculiarity to correct, to a certain extent, the effects of under-exposure, and, in a general way, to *reduce the contrasts* of an image.[1] But the full effect of this corrective will be obtained only by using a bath without bromide and by stopping development at the moment when the image of the shadows ceases to gain appreciably in density. If development were continued long enough, the image of the high-lights would, in fact, reach the same density that it would in a concentrated bath. A very dilute developer does not produce more detail than a concentrated one, but it clogs up the high-lights less easily, owing to the fact that it exhausts itself in these parts of the film. If the image has not reached the desired degree of contrast when the shadows cease to gain density, it is better to stop development and intensify the image afterwards, thus increasing all the densities proportionally rather than to continue development, which would only increase the density of the high-lights without increasing the already insufficient density of the shadows.

This corrective is applicable to an image which is being developed in a concentrated bath. It is sufficient, as soon as the excessive nature of the contrasts is noticed, to place the negative in a dish containing an ample quantity of clean water, rocking the dish once or twice in order to distribute uniformly in the water most of the developer adhering to the film. The development of the high-lights will stop almost at once, but that of the shadows will continue.

It must be added that the effects of local exhaustion of the developer are often supplemented by the formation of chemical fog, favoured by long development in a dilute bath (§ 339 and § 340).

342. Effect of the Temperature of the Developing Solution. In a given developing bath, development takes place more quickly as the temperature is higher, but developers differ considerably in the range of variations from this cause. A rise in temperature not only accelerates the development of the image, but it accelerates still more the production of fog, thus compelling the photographer to compensate to a certain extent for the effect of a comparatively high temperature (above 70° F.) by adding bromide to the developer in proportion increasing with the temperature. It is, of course, well

[1] Except for the appearance of a slightly heavier fog in the negatives developed in the dilute bath as compared with the negative developed in the strong bath.

[2] It must be borne in mind that the gelatine may become excessively swollen in a very dilute bath (unless a suitable quantity of inert salts be added, see § 356) and is then exceedingly soft.

[1] Stopping development in a concentrated bath, at a low gamma value, often gives rise to local inequalities in the image. For this reason it is always best to obtain negatives of weak contrast by employing an emulsion of moderate maximum gamma.

known that all chemical changes are accelerated by heat, and also diffusion in the gelatine is more rapid at a high temperature than at a low one, which effect is, however, partially compensated by the swelling of the gelatine which makes the liquid travel a longer distance.

The temperature of the dark room is often higher than 70° F. in summer, and frequently lower than 45° F. in winter. Thus, plates from the same box, exposed under identical conditions and developed in identical baths, may require to be developed for three minutes in summer and 10 minutes in winter to give results as similar as possible. The best results are obtained by maintaining the temperature of the baths (and as far as possible that of the dark room) as evenly as possible,[1] between 60° F. and 65° F.

The term *temperature coefficient* of a developing solution is applied to the ratio between the times of development which, at temperatures differing by 10° C. (= 18° F.) yield equivalent results, all other conditions being identical. This temperature coefficient may be said to be practically constant for different emulsions.[2] It is not affected by dilution of the developing bath but may undergo slight variations according to the composition of the bath.

Metol . .	1·3	Pyrogallol . .	1·9
Paraminophenol .	1·5	Metol-hydroquinone .	1·9
Ferrous oxalate .	1·7	Hydroquinone . .	2·5

The above table gives the average values of the temperature coefficients for baths prepared with various developers.[3]

[1] To record correctly the temperature of a room the thermometer must be about 2 in. away from the wall. A bath must never be cooled by placing ice directly into it, as this on melting would dilute the bath to an indeterminate degree. Nor should carbon dioxide be placed in it as this would transform the carbonate into bicarbonate. For lack of other means, dip into the bath a rubber bag containing cold water or a little ice. In a trade installation the tanks should be placed inside a trough traversed by running water (which can then be used for washing) or containing cooled water. Finally, it is possible to fit around the tanks or inside them coils through which is circulated brine chilled in a small refrigerator.

[2] The variations occasionally met with are usually due to the presence in the emulsion of small amounts of soluble bromide. They are avoided if the developing bath contains 0·1 per cent of potassium bromide.

[3] Once the times required for the same results with a developing bath used at two different temperatures have been ascertained experimentally, it is easy to determine the equivalent times at all other temperatures, bearing in mind that the curve indicating the *logarithms* of the times of development as a function of the temperature is represented by a straight line.

It must be pointed out that, in a developing bath containing two different developers, the notion of temperature coefficient loses all significance as soon as there is a definite departure from the optimum temperature, for each developer retains, in fact, its own temperature coefficient. For example, in the case of the mixture of metol and hydroquinone, at low temperatures it is the metol, almost alone, which is active, the hydroquinone being active only at comparatively high temperatures.

A rise in the temperature of the developing bath favours the development of under-exposed negatives both by increasing the reduction potential of the developer and by accelerating the production of chemical fog. Development in a very cold bath often yields negatives of a kind produced by under-exposure, and thus favours the correction of over-exposure.

343. Effects of Waste Products; Effect of Agitation of the Developing Bath. In a developing solution that portion which is partly exhausted by the reduction of the silver bromide in parts of the emulsion representing the highlights, is richer in bromide than other portions of the bath and is also charged with oxidation products. It is therefore denser than the fresh portions, as may be shown by the existence of convection currents, rendered visible by the movements of particles of cotton fibre (E. R. Bullock, 1922), or by local variations in the refraction of the liquid which are shown in a silhouette formed in a suitable manner by a point source of light (A. Haelsig and F. Luft, 1933).

When a sensitive film is developed in a vertical position the currents of exhausted liquid flowing from the portions which have had the most exposure may retard the development of the parts through which they pass, with the production of streaks of less density. These are most apparent when a strongly exposed part of the negative is adjacent to a region which has received uniform but much less intensive exposure. Moreover, the products of development tend to accumulate at the bottom of the tank, and development there soon becomes somewhat slower than at the top, unless the depth of the tank below the lower edges of the plates or films is sufficient to allow of the waste products accumulating there.

In the case of horizontal development in a stagnant solution, the lateral diffusion of the waste products around the strongly-exposed parts tends to produce *silhouette effects*. Outside

the strongly-exposed portion development is somewhat retarded, and the dense part of the image is thus surrounded by a border which is lighter than the ground[1] (Mackie lines). When developing a plate on which there are patches uniformly exposed but of very different dimensions, it will be noticed that the smallest patches have the greatest density, and that in each patch the density is greater at the edges than in the centre (Eberhard, 1912).

These various effects are avoided by prolonged development or by agitating the solution, or at any rate they are reduced to a point at which they are negligible unless subjected to critical examination.[2]

This agitation has a very marked effect on the speed of development, and to a certain extent on the character of the image. By eliminating the bromide formed in the course of development, agitation accelerates development, and does so to a degree increasing with the susceptibility to the action of bromide of the particular developer employed. At the same time agitation prevents the falling-off in contrasts and in the energy of the developer which would tend to be produced by variations in the local concentration of bromide.[3]

344. The Arithmetical Coefficient of a Developing Solution. Among the numerical laws of development one of the most important from the practical standpoint is certainly the approximate law formulated in 1894 by Alfred Watkins to connect the length of time required for the appearance of an image with the length of time necessary to achieve an arbitrarily chosen development factor or degree of contrast (§ 202, footnote), viz., say the ratio between the contrasts of the negative and the contrasts of the subject, in the case of negatives of which the exposure has been within normal limits.[1]

With a normal exposure and in a given developing solution, the time required for the negative to reach a given development factor is proportional to the time of appearance of the first details of the image (except the sky in landscapes, owing to its over-exposure) *provided only that the energy of the bath be not modified during the course of development.*

The multiplying factor (arithmetical factor of the developing solution or Watkins "factor") varies for a given developing solution, according to the value adopted for the development factor, that is to say according whether it is wished to reproduce exactly the contrasts of the subject in the negative, or to increase or decrease them in a varying degree. Since the image becomes more contrasted the longer it is developed, the Watkins "factor" requires to be increased to enhance the contrasts, and decreased to reduce them. Unfortunately, no rule can be fixed regarding this matter, for a variation of the "factor," which, for example, increases the contrasts to a given degree, does not apply equally (neither absolutely nor relatively) to different developing solutions.

The average values for the Watkins "factors" for various developers, as given by different writers, correspond, according to the personal taste of each individual writer, to values of the development factor usually lying between 0·8 and 1 (slightly reduced contrast or exact reproduction of the contrasts). These values must therefore be regarded as an approximation

[1] These effects may be much exaggerated by a very dilute bath or by a very thin layer of the solution (such as may be obtained by laying a sheet of plain glass almost in contact with the surface of the sensitive film). By using, instead of plain glass, a photographic plate which has been slightly and uniformly fogged, there will be noticed on the latter a reversed silhouette of the image developed on the other sensitive film, this being due entirely to the differences in activity of the developing bath at various stages of exhaustion.

[2] For dish development of negatives intended for photometric measurements the bath is often stirred by means of a large soft brush rapidly passed over the sensitive layer during the whole duration of development (W. Clark, 1925). Use has also been made of a set of parallel squeegees, guided so as to pass very close to the sensitive layer and moving to and fro in a direction at about 45° to that of the blades (J. Crabtree, 1935). In a vertical tank the liquid can be kept in motion by means of a pump, even of very simple type, but the result is never so perfect.

[3] The optimum speed of the liquid current along the surface of the emulsion in the developing bath seems about 6 cm. ($2\frac{3}{8}$ in.) per second (S. E. Sheppard and F. A. Elliott, 1924), which is rarely attained in photographic practice, but is frequently exceeded in the machines used for the continuous development of cinematograph films. It is, however, very difficult to avoid the presence of orientated defects on films developed by machine, as the soluble bromide formed in the very dense portions retards development in the areas immediately following them (J. Crabtree, 1932).

[1] The objection has been made to the Watkins method that it leads to shortened development of over-exposed negatives and to prolonged development of under exposed negatives, thus adding to the defects of incorrectly exposed negatives. But the author of the method has replied that he suggested it as a supplement to the use of his actinometer. The very slight errors in exposure which may result from the use of an actinometer have no appreciable effect on the time of development of the image and therefore do not lead to a time of development different from that which would be thus calculated in the case of a correctly exposed negative.

only ; the " factor " to use must be worked out for each particular case.

While the Watkins " factor " varies considerably for different developer substances, variations are practically negligible (except in the case of pyrogallol) so far as concerns the proportions of the constituents of a given developing solution or the use or omission of bromide. Dilution and variations in temperature, at least within reasonable limits, do not occasion any appreciable difference, it being of course understood that any modification in the developing bath is made before development begins, and that from this point the developing solution remains unaltered[1] (except for variations due to reactions in the course of development).

Developers of high reduction potential, with which the appearance of the image is always very rapid (the entire image appearing almost at once) have a much higher Watkins " factor " than developers of low reduction potential, with which the image appears only slowly and gradually (the image of the high-lights often appearing long before that of the shadows.)

The following table gives the approximate values of the Watkins " factor " for various developers—

Hydroquinone	5
Mono-brom-hydroquinone	5
Pyrogallol (no bromide)[2]	8–18
Pyrogallol (with bromide)	4–9
Pyrocatechin	10
Glycin (with soda carbonate)	8
Glycin (with potassium carbonate)	12
Paraminophenol	16–20
Diaminophenol (amidol)	18
Metol	30

The addition to the developing bath of an iodide or of a desensitizer considerably affects the " factor." The control of development by this factorial method is not applicable to sensitive films the emulsions of which have been wetted before immersion in the developing solution (wetting with water or with a desensitizer.)

In the case of developing solutions containing several developing agents, the Watkins " factor " can usually be calculated by applying the rule of mixture.[1]

The determination of the total time of development by the method based on the measure of the time of appearance of the first details of the image is a very valuable one for the beginner, and will save him serious mistakes. It may be objected that it is not logical to develop for equivalent times the images of subjects with very weak contrasts and of subjects with very strong contrasts, the negatives thus obtained not being suitable for the same types of positive printing paper. But the beginner easily makes far greater mistakes than this, and it is a simple matter to employ a variety of emulsion papers, enabling negatives of widely different character to be printed satisfactorily.

Objections based on the differences in contrast of the various classes of subject do not apply to the case of copying, where the aim is to obtain as far as possible a facsimile of the original, irrespective of its character.

Finally, this method is the only one which enables anyone not having a specially equipped scientific laboratory to carry out the development of different emulsions to the same development factor, thus allowing of satisfactory comparisons being made between various emulsions.

Some makers of developing solutions sold ready for use, or in the form of powders, or tablets, etc., follow the useful practice, which might well become general, of giving the average Watkins " factor " for each developing preparation. It is highly desirable that the same information should be given for the developing formulae recommended for various plates and films by the makers of these materials.

(*b*) Inorganic Developers

345. Mineral Salts as Developers. In addition to ferrous oxalate (which is the only one of these various developers which has come into effective practical use) and various other ferrous salts (fluoride, citrate, etc.), the following have been suggested for use as developers: cupro-oxalate of ammonia (Carey Lea, 1879); titano-oxalates and alkaline molybdo-oxalates (T.

[1] In particular, the proportion between the time of appearance of the image and the total time of development will be upset if development be done in a solution at a temperature different from that of the dark room, since the solution would all the time be in process of coming to the temperature of the room. It will also be upset by the use of a developer rendered alkaline with ammonia, the latter constantly escaping from the solution.

[2] With pyro (pyrogallol) developers, the Watkins " factor " decreases when the content of pyro is increased, and it also decreases when the content of bromide is increased.

[1] For instance, with a developer containing 6 parts of hydroquinone and 1 part of metol, the " factor " will differ very slightly from

$$\frac{(6 \times 5) + (1 \times 30)}{6 + 1} = 8{\cdot}5$$

Pavolini, 1933); hydro-sulphite in alkaline solution (W. B. Bolton, 1893); alkaline peroxides (Le Roy, 1894); or hydrogen peroxide (M. Andresen, 1889) in alkaline solutions.

To this class of developers may be added two substances on the border-line between inorganic and organic compounds, viz., hydroxylamine (C. Egli and A. Spiller, 1884), and hydrazine (E. Votocek, 1898), both in alkaline solutions. These substances have never been used in practice as developers, but on various occasions the use of certain of their organic derivatives has been suggested (Lumière and Seyewetz, 1894; W. H. Caldwell,[1] 1908).

346. Ferrous Oxalate Developer. The ferrous oxalate developer, of which the present method of preparation was indicated by J. M. Eder (1879), is now scarcely ever used by either amateur or professional photographers. Its very low reduction potential does not enable it to develop satisfactorily any but amply exposed negatives. Its preparation and use demand more care than is required for organic developers,[2] and afford no material economic compensation for these practical drawbacks. But for various scientific uses of photography this developer possesses the distinct advantage of containing no solvent of silver bromide, and of thus avoiding various disturbing factors which sometimes occur in the use of ordinary developers, but noticeable only in exact localization of points, and in photometric measurements of a high order of accuracy. This developer is the only one with which chemical fog is completely avoided (Hurter and Driffield, 1890) and which produces a perfectly neutral grey image, completely free from all coloured oxidation products.

The ferrous oxalate developer is prepared *at the time of use* by pouring slowly, with constant stirring, 1 volume of a 25 per cent solution of ferrous sulphate[3] into 3 volumes of a 25 per cent solution of neutral potassium oxalate.[1] This produces a limpid reddish mixture (ferro-potassic oxalate), which can be used as a developer without any addition of potassium bromide.[2]

Over-exposure can be corrected to a certain extent by adding potassium bromide. Being a developer with a low reduction potential (0·33, taking hydroquinone as of reduction potential = 1), the iron developer is very susceptible to the action of bromides. For correction of over-exposure it suffices to add a relatively small quantity of potassium bromide to the developing bath (e.g. not more than $4\frac{1}{2}$ gr. per 10 oz. of bath).

Sodium thiosulphate (hypo) in very minute quantity (a few drops of a 1 : 1,000 solution) has a marked accelerating effect on the ferrous oxalate developer (it decomposes the ferric salts formed), the image then appearing much more rapidly. An excess of hypo produces heavy fog, and, finally, reversal of the image, the fog being then denser than the image proper.

On the negative impregnated with the oxalate solution being placed in the wash-water or the fixing bath, a uniform precipitation of calcium oxalate takes place in the upper layers of the gelatine, forming a white deposit. During washing after fixing this deposit is readily removed by placing the negative for a few moments in a very weak solution of hydrochloric acid, e.g. 1 : 200 solution (= about 1 dram in 20 oz.).

[1] In particular this author has suggested the use of substituted aromatic hydrazines for the preparation of a developer capable of correcting over-exposure such as would lead, with ordinary developers, to reversal of the image.

[2] From these various points of view we consider the use of ferrous oxalate developer an excellent introduction to the more modern practice.

[3] Ferrous sulphate (iron protosulphate, green vitriol) occurs in clear bluish-green crystals ($FeSO_4 . 7H_2O$), which in damp air quickly become covered with an ochreous coating of a basic ferric sulphate which is formed still more rapidly by aerial oxidation of solutions of ferrous sulphate. Ferrous sulphate is sometimes replaced by ferrous ammonia sulphate or Mohr's salt ($FeSO_4 \cdot (NH_4)_2SO_4 \cdot 6H_2O$), which is more stable in the dry state, though just as rapidly oxidized in solution. To avoid the oxidation of the solution, it is prepared cold, with addition of about 1 gr. per oz. of citric acid or tartaric acid, and it is kept as far as possible in sunshine. The method commonly used in chemical laboratories for preserving ferrous sulphate solution, viz., by adding a little sulphuric acid and in placing some iron wire in it, is not applicable here, for the sulphuric acid may precipitate the ferrous oxalate in the form of a reddish powder when the two solutions are mixed. At a temperatore of 60° F. the 25 per cent solution has a density of 1·126.

[1] Neutral potassium oxalate occurs in colourless crystals ($K_2C_2O_4 . H_2O$), which are stable, are very soluble in water, and must not be confused with acid potassium oxalate (binoxalate or salts of sorrel) which is only slightly soluble in water. Solutions of the neutral oxalate are also stable. At 60° F. the density of the 25 per cent solution is 1·139. Calcium oxalate being insoluble, a white precipitate, requiring removal by filtration, is formed when potassium oxalate is dissolved in ordinary tap water. To avoid the formation of this same precipitate when adding the ferrous sulphate, it is advantageous to dissolve the latter salt in distilled water or rain-water.

[2] The reactions occurring in development are represented by the equation

$$\underset{\text{Ferrous oxalate}}{6FeC_2O_4} + \underset{\text{Silver bromide}}{6AgBr} \rightleftharpoons \underset{\text{Ferric oxalate}}{2Fe_2(C_2O_4)_3} + \underset{\text{Ferric bromide}}{Fe_2Br_6} + \underset{\text{Silver}}{6Ag}$$

(*c*) Organic Developers

347. The Developing Function. With the exception of certain derivatives of hydroxylamine and hydrazine already mentioned (§ 345), and of which none is used in practice, all organic developers belong to the aromatic series (derivatives of benzene, toluene, naphthalene, and other coal-tar substances). Laws making it possible to say whether an aromatic body of known constitution is, or is not, a developer[1] were formulated simultaneously and independently in 1891 by A. and L. Lumière, in France, and M. Andresen in Germany. Since then they have only received modifications and additions of secondary importance.[2]

348. Normal Constituents of a Developer. Although it is possible to obtain faint traces of an image (L. P. Clerc, 1909; E. Cousin, 1912) by treating a sensitive film in a very dilute pure aqueous solution of some developers (diaminophenol, paraphenylene-diamine, and its derivatives, etc.), it is usually necessary, in order to obtain a vigorous image in a reasonable time, to render the developing solution alkaline, so that the hydrobromic acid resulting from the reduction of the silver bromide may be neutralized as it is formed. A pure aqueous solution of hydroquinone does not develop, but a solution containing 5 per cent of hydroquinone and 5 per cent of caustic soda develops a satisfactory image in about three minutes, without fog or appreciable stain (C. E. K. Mees and C. W, Piper, 1911). The caustic alkali may, moreover, be replaced by the salt of a weak acid, easily displaced by the hydrobromic acid and not itself preventing development. This is the case with the carbonates and various other salts, among which are the sulphites. With the latter, development is exceedingly slow, except with the developers capable of developing an image in an aqueous solution (about one hour is required to develop a complete image in a very concentrated sulphite solution of pyro). Development is completed in a normal time by adding a carbonate (of soda or of potash) to the pure aqueous solution of a developer substance, but these solutions (like nearly all others compounded with a caustic alkali) oxidize in the air with very great rapidity, thus giving rise, during the time necessary for development, to brown oxidation products, which strongly stain the gelatine.

In 1882 H. B. Berkeley observed that the addition of a sulphite to the alkaline solution of a developer considerably delays this oxidation and opposes the formation of the highly-coloured products obtained in the absence of this *preservative*. While sulphite must be considered a necessary constituent of all developing solutions compounded with organic developers, it is not entirely advantageous. While it increases the energy of a solution of paraminophenol and carbonate (M. Andresen, 1898), it retards development with a solution of hydroquinone and carbonate (J. Desalme, 1921), and furthermore, as a solvent of silver bromide (with which it forms a soluble double sulphite) it favours the formation of fog.

Finally, in many cases a bromide, added in small quantities to the developing bath, must be used as a *restrainer* of chemical fog (§ 336 to § 338).

349. Mixtures of Developers. While the number of developers is considerable, all are not of the same importance; the practical properties of many of them do not differ to any material extent, and changes in the relative quantities of the various constituents of a given developing solution often cause greater differences than those between one developer and another.

Moreover, it is often possible, by combining two developers of different character in suitable proportion, to obtain results very superior to those obtained by using one developer alone. The type of these mixed developing solutions is that prepared with metol and hydroquinone, the important properties of which were emphasized by Lüppo-Cramer in 1902. In such a developer the image appears rapidly, the shadows

[1] It is not possible to enter here into the details of these laws, and it must suffice to indicate the chief of them, taking it for granted that the reader is familiar with the chemical terms used in outlining them.

In order that a substance of the aromatic series can be a developer it is necessary that the aromatic nucleus should contain either two hydroxyl (OH) groups or two amino (NH_2) groups, or, again, one hydroxyl and one amino. This condition holds good only in the para series of compounds, and, as a rule, in the ortho series; it ceases to apply in the meta series. More simply, it may be said that an aromatic derivative is a developer only if it can give rise to a quinone on oxidation (J. Desalme, 1910). Thus, of the three diphenolic derivatives of benzene, isomers of the common formula $C_6H_4(OH)_2$, hydroquinone (*para* derivative) is an energetic developer, pyrocatechin (*ortho* derivative) is a poor developer, and resorcin (*meta* derivative) is not a developer at all.

[2] It seems possible to state now a much more general rule (W. Reinders, 1934; M. Abribat, 1935): Any system of which the reduction potential is inferior to 0·12 volt constitutes a developer. Developers having almost the same reduction potential may, however, develop identical latent images (same exposure on different pieces of a given sensitive layer) at very different speeds.

following quickly on the high-lights (character of metol) and density then builds up rapidly (character of hydroquinone).[1] Moreover, the chemical fog, so frequently given by metol, and the yellow fog, due to hydroquinone, are thus avoided at one and the same time.

The same advantages follow in all cases of combining a developer of high reduction potential with one of low reduction potential, e.g. metol and glycin, or metol and pyro.

Similar results to those obtained by these mixtures can be obtained by various definite combinations of developers with different characters, e.g. compounds of a polyphenol with an aminophenol or polyamine, described by Lumière and Seyewetz from 1899 to 1913; hydramine, metoquinone, and chloranol (§ 363), all substances developing the latent image in a sulphite solution, and considerably energized by rendering this solution alkaline. It is also possible to obtain very similar developing solutions without needing to isolate these compounds, by mixing the two separate developers in suitable proportions.

350. Oxidation Products of Developers. In the presence of sulphite there is not the production of highly-coloured compounds, comparable to the humic acids (humus) which form in the oxidation of nearly all developers, and especially with the polyphenols, but all oxidation is not prevented, and it is of course not possible to prevent oxidation due to the reduction of the silver bromide. The products of oxidation formed during development often attach themselves to the gelatine in the very places where they have been formed, causing a tanning of the gelatine, which takes place more completely according to the density of the silver image at the particular parts,[2] and sometimes forming an actual secondary image,[3] frequently in conjunction with a general staining of the gelatine.

Of the developers in general use, pyro exhibits the above-mentioned properties most strongly when not protected by a relatively large proportion of sulphite. In addition to a slight yellow-brown stain extending over the whole image, there may be observed, after complete removal of the silver (e.g. with Farmer's reducer), a brown image, not of great visual intensity, but which, by reason of its highly inactinic colour, is often strong enough to allow of satisfactory prints being made from it.[1]

The secondary image given by the oxidation products of many developers can play the part of a mordant (§ 603) towards several basic dyes (Lumiére and Seyewetz); it can also cause the reduction of various metal salts (F. Leiber, 1931).[2]

351. Rôle of Sulphite. The quantity of sulphite to be used in a developing solution depends on the nature of the developer and of the substances used to render it alkaline, on the dilution of the bath, on the degree of keeping quality desired in partly emptied bottles or in developing tanks, and on the prevailing temperature.[3]

Certain developers which are not practically employed, leave in the gelatine a secondary image of pronounced colour. With indoxyl this image is blue; with thio-indoxyl, red (B. Homolka, 1907). Attempts have been made to produce in practice images of various colours by simple development, without using rare substances, by incorporating in the sensitive film a substance which gives by reaction with the oxidation products of suitably chosen developers (phenylene-diamines and their derivatives, for instance) a coloured substance (insoluble in water) or its leuco base, later converted into a dye by oxidation. These phenomena have been utilized in the Kodachrome process (§ 883).

[1] The advantages of the two associated developing agents do not manifest themselves simultaneously except within a limited range of alkalinity of the developer. In a very feebly alkaline developer (pH less than 9) hydroquinone plays no part and can be omitted (M. C. F. Beukers, 1936).

[2] The localized tanning of the gelatine gives rise to unequal contractions of the film during drying after the various operations. These inequalities are appreciable in measurements calling for a high degree of accuracy, for which reason tanning developers are not used in astronomical work. In development with pyro this tanning of the gelatine tends to obstruct diffusion action, and, in consequence, to result in lower densities, the length of the straight portion of the curve being thus reduced towards the over-exposure end.

[3] This secondary image can be shown by dissolving away the silver image with Farmer's reducer (§ 459). The insolubility and impermeability of gelatine in the densest parts of an image developed with pyro (without, or with very little, sulphite) have been frequently employed in various photo-mechanical or semi-mechanical processes, e.g. for forming a resist, on metal, towards an etching bath, or for the localized absorption of dye which is afterwards transferred to a moist film of soft gelatine. The absorption of actinic rays by this coloured image allows of a negative being intensified by repeated re-development (§ 454).

[2] For instance, it is possible to chlorinate the silver of the image in a solution of copper sulphate and hydrochloric acid. This is followed by rinsing, treatment with dilute ammonia, and fixing. There is on the image a deposit of colloidal silver of extremely fine grain. It would also be possible to deposit on the secondary image various coloured ferrocyanides by means of baths commonly used in toning (Chap. XXXVIII (*h*)).

[3] It has been pointed out (M. L. Dundon and J. I. Crabtree, 1924) that *used* developing baths, kept for long in corked bottles or in deep tanks, can give rise

For instance, very little sulphite is required with glycin (the spontaneous oxidation of which is negligible) and with paraphenylenediamine (the oxidation products of which are then almost colourless), while a relatively large quantity is required with pyro solutions to avoid staining the image.

Developing solutions made alkaline with caustic alkalis tend to oxidize more rapidly than those containing carbonates; for this reason the sulphite content should be somewhat increased with the former. All other conditions being equal, the proportion of sulphite to developer must be greater in a dilute solution than in a concentrated one.

With most developers, if the developing solution is prepared shortly before use and is used once only, a sulphite content of about 1 per cent is sufficient. It is, moreover, at this strength that the solubility of silver bromide[1] in solutions of sulphite reaches its minimum, thus markedly reducing chemical fog (Mees and Piper, 1912). The amount of sulphite must be increased when a developing solution has to be kept long in a partly empty container, especially when there is a large surface in contact with air (solution left in a developing tank without a floating cover) and in all cases where air has free access to the emulsion during its development (development of cinema film on continuous machines or drums, and development in tanks where the developer is kept in motion by a stream of air).[2]

Finally, as an appreciable rise in temperature always accelerates the atmospheric oxidation of the developing solution, it is necessary in hot climates to counteract this effect by increasing the quantity of sulphite specified for use in temperate countries.

352. The fact that a small quantity of the silver halide dissolves in the sulphite of soda used as a preservative of the developing solution against oxidation results in the solution behaving, to a certain extent, like a physical developer; the dissolved silver salt is reduced by the developer and deposits itself, partly in the liquid and on the walls of the tanks, and partly on the image itself, which is thereby reinforced.

In those parts of the film where there is no image, which is especially the case with shadow parts of large size in an under-exposed negative, the reduced silver has not in its neighbourhood germs on which it can deposit itself selectively, and it then deposits itself in a nearly uniform manner, in the state of colloidal silver, thus constituting one of the forms of *dichroic fog* (§ 433). This fog occurs especially with hydroquinone developer, containing much sulphite, or that is warm, when development is unduly prolonged.

It may incidentally be mentioned that a bath containing plenty of sulphite generally avoids the local fog which sometimes tends to form on negatives developed vertically in metal frames if the metal is not one of those specified (§ 264) as being without action on the developing solutions.

353. The action of sulphite is not the same with all developers. While certain developers derived from diphenylamine are, after oxidation, indefinitely regenerated by sulphite (J. Desalme, 1910), that is a special case, limited, unfortunately, to substances which have not come into general photographic use.

Besides protecting the developer against oxidation,[1] an important part played by sulphite is the prevention of the formation of the highly-coloured oxidation products of developers, which are capable of staining the gelatine. This action takes place either by the sulphite reducing these coloured substances to the state of colourless leuco bases, or by reason of the oxidation of the developer, in the presence of sulphite, producing products different from those obtained in an alkaline solution containing no sulphite.[2]

354. Rôle of the Alkalis. The alkali, whilst playing the part of an electrolyte in the developing bath, must also assure the neutralization of

to a fog due to the bacterial formation of sulphides from the sulphite in the developing solution. This trouble, which has been noticed in some cinema printing works in the Paris district using water unfit for drinking, can be avoided by sterilizing the water or by adding suitable antiseptics to the developer, such as sodium fluosilicate (W. Triepel, 1933).

[1] Owing to the much greater solubility of silver chloride in sulphite solutions, the amount of this salt must be very small in the special developing solutions for positive emulsions with silver chloride.

[2] Let us add that this method of agitation is absolutely to be deprecated, owing to the speedy exhaustion of all baths other than solutions of glycin.

[1] It should, moreover, be noted that several developers (particularly hydroquinone and paraminophenol), if added in very minute quantity to a solution of sulphite, retard very markedly the oxidation of the latter by the oxygen of the air (Lumière and Seyewetz, 1905). They probably oppose the catalytic action of various metallic salts, particularly copper salts, which may be present in quantities so small as to escape detection.

[2] Thus, in the case of hydroquinone, the first product of oxidation is hydroquinone soda monosulphonate

the hydrobromic acid, which otherwise would arrest development at the outset. Also, when the developing substance is a salt (e.g. the hydrochloride or sulphate of an aminophenol or diamine), it is needed to liberate the base; or when the developer is a phenol (a polyphenol or aminophenol) it is needed to form a salt with at least part of the phenol compound.[1]

Owing to the disintegration of the gelatine, which is easily produced by the caustic alkalis (when present in excess of the quantity required to form the phenolate), it is customary to use in place of them the corresponding carbonates (or, sometimes, basic phosphates, borates, or silicates. In an aqueous solution, a minute proportion of the carbonate is dissociated into caustic alkali and bicarbonate (or dibasic phosphate) and can therefore play the part of a reserve of caustic alkali which is constantly replenished as long as the mixture contains available carbonate.

At the strengths generally used in developing baths (5 per cent to 10 per cent) the alkaline carbonates accelerate the diffusion of the liquid into the gelatine, without affecting the gelatine or causing excessive swelling.[1]

During development, a bath rendered alkaline by a carbonate becomes charged with bicarbonate, which plays practically no part as an alkali.[2] Thus, when it is desired to strengthen a bath in continuous use, a little caustic alkali may be added to convert this bicarbonate into normal carbonate.

Ammonia and ammonium carbonate can act as alkalis in developing baths, but their use is limited to a few special cases. They are solvents of silver chloride and bromide, and so favour the production of dichroic fog; in a slow-acting developer rendered alkaline by ammonia the contrast of the image is restricted because a considerable portion of the silver is deposited on the sides of the dish, this portion being the larger as the strength of the ammonia is higher, the grain finer, and development slower (J. Vidal, 1931). While the true amines (ammonia substitutes) have never been used on account of their offensive smell, many of their derivatives have been employed in phenol or aminophenol developers: aminoacetate of soda $NH_2CH_2CO_2Na$ (Hoechst Farbwerke, 1901), alcoholamines, particularly triethanolamine $N(C_2H_4OH)_3$, and its salts (M. L. Dundon, 1932), etc.

Sulphite of soda tends to dissociate itself, at least in very weak proportions, into soda bisulphite and caustic soda, thus permitting of its use in preparing "non-alkaline" developing solutions with basic developers which oxidize rapidly in alkaline solutions.

Any factor which increases this dissociation, and particularly the addition of a substance capable of combining with soda bisulphite, e.g. acetone and the aldehydes (Lumière and

(J. Pinnow, 1913); in the case of spontaneous oxidation there are formed—

$$C_6H_4(OH)_2 + 2Na_2SO_3 + 2O = C_6H_3(OH)_2SO_3Na$$
Hydroquinone — Soda sulphite — Oxygen — Hydroquinone sulphonate of soda

$$+ Na_2SO_4 + NaOH$$
Soda sulphate — Caustic soda

and, in the case of development,

$$C_6H_4(OH)_2 + 2Na_2SO_3 + 3NaOH + 4AgBr$$
Hydroquinone — Soda sulphite — Caustic soda — Silver bromide

$$= C_6H_3(OH)_2SO_3Na + Na_2SO_4 + 4NaBr + 4Ag$$
Hydroquinone sulphonate — Soda sulphate — Sodium bromide — Silver

Oxidation ends with hydroquinone-disulphonate (the reactions are the same with pyrocatechin) except when the alkali is formed in the bath at the expense of the sulphite by addition of formaldehyde or of ketone, in which case the oxidation stops at the monosulphonate (A. Seyewetz and S. Szymson, 1934). The formation of quinone is impossible in these conditions: the addition of quinone to a solution of sulphite giving the monosulphonate which constitutes a developer.

The formation of caustic soda by atmospheric oxidation of a sulphitic solution of hydroquinone explains why such a solution, which is almost incapable of developing an image when freshly prepared, becomes very active after standing for a few days in a half-full bottle (Lüppo-Cramer, 1931).

[1] The rôle of the alkali in the developer appears to be that of ensuring to the bath a given degree of alkalinity. At an equal alkalinity (same concentration values in hydrogen ions expressed by equal pH values) all the alkalis behave in an identical manner towards a given developer. In the use of caustic alkalis the constancy of the alkalinity of the bath is possible only by the addition of buffer salts; mixtures of sulphite and of a carbonate, phosphate, etc., have not to be buffered (G. P. Faerman and N. N. Schischkina, 1933).

[1] Swelling of the gelatine is almost completely prevented in a solution of 15 per cent of anhydrous soda carbonate, the swelling being then only about one-fifteenth that which takes place in a 5 per cent solution of carbonate or sulphite, which solutions are less active than pure water in this respect. Saturated solutions of alkaline carbonates are used for the almost instantaneous drying of gelatine films saturated with water.

[2] As the bicarbonates are weakly alkaline salts they considerably accelerate development when using a bath containing sulphite and a developer which works without an alkali; their action is practically nil in an ordinary developer. When added to a developing bath containing caustic alkali, they convert the latter into normal carbonate, and so have been suggested as restrainers. In comparison with alkalis, borax is a very mild accelerator of development but far more active than the bicarbonates; it has been suggested in place of carbonates in some formulae.

Seyewetz, 1896), accelerates development in the case of developers working without an alkali, and even renders it possible to dispense with an alkali in developers that usually require it. This particular action does not manifest itself fully except with the phenolic developers (pyro, in particular), which form a phenolate with the alkali available. Of these various mixtures capable of replacing the alkalis in developing solutions, the only one used in practice is that of soda sulphite and acetone.

355. Effect of Soluble Iodides. The addition of a small quantity of an alkali iodide (0·02 per cent to 0·2 per cent) to a developing solution, causes, in the case of low-potential developers, and particularly hydroquinone, a very considerable acceleration of the appearance of the image and, in some cases, also an acceleration of development itself (A. Lainer, 1891), this particular action being often referred to as the *Lainer effect*. The addition greatly modifies the Watkins "factor," in some cases. With hydroquinone (made up with carbonate), the "factor" rises from 7 to 28, but the addition is without effect in the case of metol (S. E. Sheppard and G. Meyer, 1920).

The same action is observed when the iodide, instead of being mixed in the developer, is used as a preliminary bath, followed by prolonged rinsing in pure water, and the fact indicates that the action of iodide is on the grain of the emulsion and not on the developer itself (Lüppo-Cramer's hypothesis of nucleus denudation). The mechanism of this action is not yet understood.

The presence of an iodide in the developer prevents the formation of black abrasion marks (Lüppo-Cramer, 1914), but not of white marks, and lessens the tendency to dichroic fog. The use of iodide also prolongs fixation because of the formation, in the film, of yellow silver iodide, which is less rapidly dissolved than silver bromide.

In more concentrated solutions iodide produces a weakening of the image equivalent to a reduction of sensitivity, and may produce fog, particularly in a developer containing much sulphite.

356. Use of Various Neutral Salts. Gelatine swells less in a bath if the latter contains salts. The excessive swelling of gelatine, which occurs in warm climates during development and causes various failures, may be avoided by adding to the bath a neutral salt which has only a negligible effect in development (L. J. Bunel, 1910). Among the various salts which may be used (sulphates, nitrates, phosphates, oxalates, etc.), soda sulphate is usually chosen on account of its cheapness. In moderate quantities, these salts slightly accelerate development with very dilute hydroquinone developing solutions, have no action on high-potential developers, and slightly retard the action of pyro solutions. At the very high strengths required to prevent the swelling of gelatine they retard development to an appreciable extent, a fact which is an advantage, for in this way it is possible to compensate in some measure for the acceleration of development due to high temperature.[1]

At various times certain advantages have been attributed to the use of the alkali ferrocyanides mentioned in some old formulae for developers. The complete uselessness of this addition has been shown, in particular by P. Mercier (1892).

357. Various Additions. Soda thiosulphate (hypo), the accelerating action of which on the ferrous oxalate developer has been mentioned (§ 346), retards development in alkaline developers, decreases the density of the image, and causes the formation of fog, unless used in such large quantity that, like all solvents of the haloid salts of silver,[2] it leads to the production of dichroic fog. Under certain conditions, it is, however, possible to increase the amount of hypo up to the point when development and fixation take place together (§ 392).

On various occasions it has been suggested that development be slowed by increasing the viscosity of the developing solution by adding various thickeners, such as glycerine, glucose (W.

[1] In the case of developers (e.g. amidol) containing a small proportion of salts, the addition of a large quantity of soda sulphate coagulates the colloidal silver which tends to accumulate in the bath, particularly in the development of fine-grain positive emulsions, thus preventing this silver from impregnating the gelatine and thereby causing stains or a uniform coloration (L. Lobel, 1920).

[2] The addition to the developing solution of thiourea (thiocarbamide) and of several of its derivatives (thiosinnamine, thiourea chloride, tetrammonia, etc.) gives rise to chemical fog of considerable density and of a reddish or violet tint, in the portions of the film other than those where the (negative) image, a weak grey one, is developed. The net result is thus a positive (J. Waterhouse, 1890). Owing to its many irregularities this method has not been found practical for regular use in making *reversed* negatives or positives.

It would seem that this process has something in common with the erratic reversal phenomena which occur on negatives which are subjected to prolonged development; the solvent of the silver bromide in this latter case is the soda sulphite of the developer.

de W. Abney, 1897), sugar (L. Baekeland, 1899). By retarding to a certain extent the interchange of liquids between the substance of the gelatine and the bath in which it is immersed, these additions tend to cause the image to be formed to a greater extent at the surface of the film, thus reducing contrast. The action, however, is not always very appreciable.

The addition of alcohol has been sometimes advised to avoid the precipitation of the developer in concentrated developer solutions, or to facilitate wetting. In developers containing hydroquinone, if ethyl alcohol and, more severely, methyl alcohol, are added in appreciable proportion, they give rise to fog. Developers may also contain antiseptics (§ 351) and wetting agents (§ 369).

In addition to desensitizers which can be added to the developing bath, and of which some hinder the production of aerial fog (§ 331 to § 332), some commercial developing solutions contain an inert dye (usually eosine) serving to disguise the slight yellow or brown tinge, due to oxidation products of the developer, produced during preparation and bottling.

(*d*) Substances Chiefly Used in Making Developing Solutions

358. Organic Developers. The table on page 241 is a list of developers in general use. It gives their common names, the corresponding commercial names, their chemical formulae, dates of introduction for photographic use, the names of their authors, reduction potentials (as stated by A. H. Nietz, 1922) measured by the effect on their speed of development exercised by potassium bromide[1] (the developers with the highest potentials being those least susceptible to the action of bromides), and, in the last column, the *molecular weight* (corresponding with the chemical formula).

In the following paragraphs these developers are dealt with, according to the same classification, as regards their practical properties, with mention of some characteristics by which, if necessary, they may be identified.

359. Polyphenol Developers. *Hydroquinone.* Small, colourless crystalline needles, melting at 336° F. (169° C.) without decomposition. Very soluble in alcohol, ether, and hot water. Less soluble (6 per cent) in cold water; insoluble in benzene.

Formerly there was sometimes used a yellow hydroquinone which was a combination of hydroquinone and sulphurous acid. It has no practical advantage over the regular (white) product.

Hydroquinone deteriorates in air, but slowly. It is used with alkali carbonates or caustic alkalis; these solutions keep fairly well.

They do not stain either the gelatine or the fingers. Owing to its extreme sensitiveness to bromide, hydroquinone gives great density while retaining perfect transparency in the less-exposed portions of the image, and is therefore a favourite developer when copying drawings, manuscripts, etc., in black-and-white without intermediate tones. It is also largely used for the development of warm tones.

For developing negatives of subjects including half-tones, hydroquinone is almost always used in admixture with a high-potential developer, generally metol[1] (§ 349).

Hydroquinone developing solutions are almost inert at low temperatures (55° F. and under).

Pyrocatechin. Colourless crystalline needles or scales, the smell of which is similar to that of pyro, melting at 104° C. (219° F.) without decomposition, very soluble in alcohol, ether, water, and benzene.

The oxidation products of pyrocatechin give rise, in gelatine containing the silver image, to a tanning effect almost as complete as that due to pyro, at least when the sulphite content is small. From a practical point of view, pyrocatechin does not offer any appreciable advantage over various other products of easier manufacture. It occurs, as a rule, in German formulae.

Pyrogallol. White crystalline powder of extreme fineness and lightness (1 oz. of resublimed pyro fills a 10-oz. size bottle), fairly easily oxidizable, on account of its state of fine division, the dust remaining floating in the air after handling. Crystal pyro is commercially available and is free from these disadvantages. Pyro has a characteristic smell; it melts at 130° C. (266° F.); it is very soluble in alcohol, ether, water (over 25 per cent), and dissolves with difficulty in warm benzene.

[1] Except in the case of amidol the figures given for the reduction potential apply to developing solutions rendered alkaline by a carbonate. In some instances, particularly with paraphenylene diamine, the potential is considerably increased when a caustic alkali is used.

[1] The monochlor and monobrom derivatives of hydroquinone (Lüppo-Cramer, 1899) are much more energetic developers than hydroquinone itself, especially the bromine derivative, the reduction potential of which (21) is somewhat greater than that of metol. Both forms are known under the trade-name Adurol; they are less oxidizable than hydroquinone and give purer blacks.

DATA RELATING TO SOME DEVELOPERS

	Common Name and Commercial Names	Chemical Formula and Scientific Names	Author and Date of Use in Photography	Reduction Potential (relative values)	Molecular Weight
Polyphenols	**Hydroquinone** . Quinol	$C_6H_4(OH)_2$, 1 : 4 Paradihydroxybenzene, Phenediol—1 : 4	W. de W. Abney: 1880	1	110
	Pyrocatechin .	$C_6H_4(OH)_2$, 1 : 2 Orthodihydroxybenzene, Phenediol—1 : 2	J. M. Eder and Toth: 1887	7	110
	Pyrogallol Wrongly called Pyrogallic acid (Piral = crystallized pyrogallol)	$C_6H_3(OH)_2$, 1 : 2 : 3 Trihydroxybenzene, Phenetriol—1 : 2 : 3	V. Regnault: 1851	16	126
Aminophenols and their derivatives	**Paraminophenol** .	$C_6H_4(OH)$ (NH_2, HCl)—1 : 4 Para-aminophenol hydrochloride Aminophenol, 1 : 4 hydrochloride	A. and L. Lumière, M. Andresen: 1891	6	145·5
	Paraminocresol . Monomet	$C_6H_3(OH)$ (CH_3) (NH_2, HCl), 2 : 4 Hydrochloride of 2-methyl 4-aminophenol Hydrochloride of paramino-orthocresol	M. Andresen: 1891	7	159·5
	Metol Atolo, Genol, Elon, Viterol, Rhodol, Satrapol, Monol, Scalol, etc.	$C_6H_4(OH)$ ($NH . CH_3$, $\frac{1}{2}H_2SO_4$), 1 : 4 Sulphate of methylamino-paraphenol	A. Bogisch: 1891	20	172
	Glycin . . Iconyl Kodurol, Glyconiol	$C_6H_4(OH)$ ($NH . CH_2COOH$), 1 : 4 Para-hydroxyphenylglycin Para-hydroxyphenylamino acetic acid	A. Bogisch: 1891	1·6	167
	Neol	$C_6H_3(OH)$ (COOH) (NH_2, HCl), 1 : 2 : 4 Hydrochloride of para-aminosalicylic acid		—	189·5
	Eikonogen . .	$C_{10}H_5(OH)$ (NH_2) ($NaSO_3$), 3 : 4 : 7. + $2\frac{1}{2}$ H_2O Hydrated aminonaphthol sulphonate of sodium	M. Andresen: 1889	—	306
	Amidol . . Diaminophenol, Dolmi, Diamol	$C_6H_3(OH)$ (NH_2, HCl)$_2$, 1 : 2 : 4 Hydrochloride of 2 : 4-diaminophenol	A. Bogisch: 1891	30 to 40	197
Polyamine	**Paraphenylene-diamine** . .	$C_6H_4(NH_2)_2$, 1 : 4 Diaminobenzene 1 : 4 (free base)	M. Andresen: 1888	0·4	108
Products of addition	**Metoquinone** .	$C_6H_4(OH)_2$, $2C_6H_4(OH)$ ($NH . CH_3$) Combination of hydroquinone and metol base	A. and L. Lumière and A. Seyewetz: 1903	—	356
	Chloranol . .	$C_6H_3Cl(OH)_2$, $2C_6H_4(OH)$ ($NH . CH_3$) Combination of hydroquinone monochloride and metol base	A. and L. Lumière and A. Seyewetz: 1913	—	390·5
	Hydramine . .	$C_6H_4(OH)_2$, $C_6H_4(NH_2)_2$ Combination of hydroquinone and of paraphenylenediamine	A. and L. Lumière and A. Seyewetz: 1899	—	218
	Meritol	$C_6H_4(OH)_2$, $C_6H_4(NH_2)_2$ Combination of pyrocatechin and of paraphenylenediamine		—	218

Pyro is the developer most usually recommended for use with plates and films of English and American origin. These emulsions tend sometimes to give images of soft contrast. Hence, the advantage of a developer like pyro, which gives, in addition to the silver image, a brown image of oxidation products (§ 350).

Pyro is certainly one of the best developers known, but, in addition to the staining of the gelatine (which can be almost completely avoided by increasing the amount of sulphite), it has the disadvantage of staining the fingers and nails a dark brown[1] (particularly if used continuously), unless means are taken to keep the hands from contact with the developer. It is the developer preferred by workers who endeavour during development to modify the character of the image by variations in the composition of the developing bath.

Pyro developing solutions ready for use oxidize somewhat quickly, as indicated by the yellow or brown colour which they assume. It is therefore customary to have two stock solutions, one containing the carbonate or caustic alkali, and the other, the pyro, sodium sulphite, and a certain amount of sodium bisulphite, as pyro is relatively stable only in acid solution.

With pyro the maximum energy is obtained with a caustic alkali, but the quantity must not exceed that corresponding with the formation of the monophenolate (E. Valenta, 1902). Alkali in excess of this proportion (45 parts of caustic potash or 32 parts of caustic soda per 100 parts of pyro) leads to intense chemical fog and a very rapid discoloration of the baths.

By adding acetone to a solution of pyro in sodium sulphite a developer is formed which gives pleasing warm tones on lantern plates when properly dosed with bromide. The smell of the acetone and the headaches which may result from its fumes forbid the use of this mixture except in perfectly well ventilated dark rooms.

360. Aminophenol Developers. *Paraminophenol.* This developer is sometimes supplied as the free base, but it is then very rapidly oxidized, so that it is usually preferred to obtain it as a stable salt, generally in the form of a hydrochloride.

[1] To prevent all stains due to the use of pyrogallol it has been suggested to substitute for it its compound with hexamethylenetetramine (a white crystalline powder unoxidizable in air), obtained by mixing the aqueous solutions of 2 mol. pyrogallol and of 1 mol. hexamethylenetetramine, insoluble in cold water, but soluble in alkaline solutions, and very sensitive to the influence of bromides.

Paraminophenol hydrochloride occurs in colourless crystalline needles, decomposing without melting on heating. It is very soluble in cold water, somewhat less soluble in alcohol, and insoluble in ether. The addition of an alkali carbonate to a concentrated aqueous solution of paraminophenol hydrochloride causes effervescence and the precipitation of the free base, which is very slightly soluble in water and in solutions of sulphite or carbonate. For this reason it is impossible to prepare concentrated developing solutions of paraminophenol when the alkali is a carbonate. With a caustic alkali the free base is converted into an extremely soluble aminophenolate, so that it becomes possible to prepare very highly concentrated developers, which are diluted from 20 to 100 times for use (*Rodinal, Agfanol* and their imitations). Paraminophenol developing solutions keep satisfactorily.

Paraminophenol is one of those developers which have the least tendency to give chemical fog when development is done with warm solutions. It is therefore largely used in tropical countries, but should be employed with an alkali carbonate and not with a caustic alkali.

In the United States paraminophenol is available in the form of an oxalate (*Kodelon*), and the suggestion has been made to use it, preferably, in the form of a tartrate (J. Desalme, 1924) the base of which is not precipitated by carbonates, so that concentrated solutions can be made without caustic alkali and also without first having to isolate the free base, sodium tartrate being much more soluble than the chloride.

Paraminocresol. This developer has no marked advantage over paraminophenol. During the war, when stocks of German metol were exhausted, and its manufacture was not yet perfected in England, France, and the United States, paraminocresol was suggested as a substitute for metol, to which, however, it is far inferior in energy. Its properties differ little from those of paraminophenol, and therefore do not need description.

One of its immediate derivatives, *Edinol*, is scarcely of greater importance.

Metol. Metol, known for many years only under this German trade-name, occurs as almost colourless crystalline needles which decompose without melting when heated, are soluble in cold water and in alcohol, and insoluble in ether. Metol being one of the developers most subject to fraud, it is useful to note that it is quite

insoluble in ether[1] and also that it dissolves completely in three times its own weight of concentrated hydrochloric acid, in which the other aminophenols likely to be substituted for or mixed with it are only very slightly soluble.

The free base of metol can be precipitated from very concentrated aqueous solutions of the sulphate by adding a carbonate. It can also be precipitated, even at much lower concentrations, by a comparatively strong solution of sulphite. Owing to its great solubility in alcohol, the latter is sometimes used instead of part of the water when a more concentrated solution (to be diluted four to five times for use) is prepared. Concentrated solutions of sulphite can also precipitate metoquinone when an attempt is made to dissolve metol and hydroquinone simultaneously. This trouble is avoided by adding the major portion of the sulphite after these developers have been dissolved, or by not dissolving the larger part of the sulphite salt until the mixture has been rendered alkaline. The presence of a little alcohol (§ 357) also prevents this precipitation to a certain extent. By combining these various methods it is possible to obtain metol-hydroquinone developing solutions two or three times as concentrated as the normal strength.

Although metol can develop in a non-alkaline solution of sulphite, it is usually rendered alkaline by the alkali carbonates. Its energy becomes excessive with a caustic alkali unless very small quantities are used, and there is a danger of chemical fog unless a fair amount of bromide is used, which precaution is often unnecessary with a carbonate, provided that the developer does not contain too much metol. Developing solutions containing metol and alkali carbonates keep well. They are well-suited for developing negatives known to be under-exposed. Contrary to a widely-held opinion, it is quite possible to obtain very contrasting images, provided the plate is left sufficiently long in the bath. The contrast is less than with hydroquinone alone, but with the latter the effect is obtained partly at the expense of details in the shadows.[2]

[1] Stir the ether with some of the suspected substance, let it stand, and then pour off as much of the ether as possible into a watch-glass, where there should be no residue after the ether has evaporated. Any residue would probably be hydroquinone.

[2] The very rapid appearance of the shadow detail, which in many other developers is a sign of over-exposure, leads many workers unaccustomed to the use of metol to shorten development, instinctively assigning to this developer a far too low Watkins " factor."

As a rule, metol is mixed with hydroquinone (§ 349), the developing solution thus obtained being, from various points of view, distinctly superior to those in which either one or other of these developers is used alone. It keeps very well, does not stain either the fingers or the gelatine, gives as much detail as metol used alone, and nearly as much contrast as hydroquinone.

The skin troubles (similar to eczema) attributed to metol are exc usively due to an impurity (NN—dimethyl paraphenylene diamine) and do not appear to have been experienced with metol of French make.

Glycin. Very brilliant, colourless, crystalline scales, somewhat resembling mica, and melting and decomposing at about 200° C. (392° F.). Glycin is almost insoluble in cold water and in alcohol, insoluble in ether, soluble in dilute solutions of mineral acids (but not in acetic acid), soluble also in solutions of sulphites and alkali carbonates (with effervescence if glycin be present in quantity) and in solutions of caustic alkalis.

The chief characteristic of glycin is that it is practically inoxidizible by air either in the dry condition or in carbonated solutions, even when very dilute. It is therefore admirably suited for prolonged time development in very dilute solutions, especially as only a very small quantity of sodium sulphite need be added. This avoids the risk of dichroic fog, common with very dilute developing solutions of easily oxidized developers with which a proportionately larger amount of sulphite has to be used. For the same reasons it is very suitable for the mechanical development of cinematograph film on continuous machines, or on revolving drums which are partially immersed.

In preparing developing solutions with glycin, potassium carbonate is usually preferred to sodium carbonate, since it is then possible to make up more concentrated stock solutions.

Eikonogen. At the time of its introduction eikonogen enjoyed great popularity. It lost much of its popularity on the introduction of metol, and is now used only in Germany, the only country where it is manufactured. The same may be said of a developer of almost the same constitution, *Diogen* (acid aminonaphthol disulphonate of sodium).

361. Amidol. *Diaminophenol.* Though belonging to the aminophenol class, this developer owes to its two amine functions very special properties which are possessed also by a

closely-related substance, *Diaminoresorcine*, formerly somewhat popular.

Diaminophenol hydrochloride occurs in crystalline needles, which are colourless or light grey (incipient oxidation, difficult to avoid in manufacture) and decompose without melting when heated. This salt is very soluble in water and almost insoluble in alcohol and ether. It dissolves freely in solutions of sodium sulphite, which are thereby partly transformed into bisulphite. This solution oxidizes fairly rapidly in air and must therefore be prepared shortly before use. The neutralization, and particularly the alkalinization, of this solution considerably hasten its oxidation, which shows itself by a very deep colour (deep blue for the carbonates and wine red for the caustic alkalis). On the other hand, an addition of bisulphite or of a weak acid (boric, lactic, glycollic, etc.) confers fairly good keeping qualities, the mixture being capable of being kept for several days in an open container without any appreciable deterioration.[1]

Diaminophenol hydrochloride, as we have already seen (§ 348), will act as a feeble developer in plain water solution. It develops fully when made up with sulphite, the speed being the greater as the solution is less acid.[2] As long as the mixture contains neutral sulphite, development proceeds, as with all usual developers, downwards from the free surface of the emulsion. On the other hand, when the neutral sulphite has been entirely coverted into bisulphite (by the hydrochloric acid of the developer itself, or by acids separately added), development is very slow, begins in the deepest layers of the emulsion, and only slowly reaches the surface, the image being visible first on the non-emulsion side (G. Balagny, 1912). This *depth development* takes place only so long as the developing bath has a distinct smell of sulphur dioxide (smell of burning sulphur). It is based on the fact that the reduction of the silver bromide becomes possible only after the gelatine of the upper layers of the film (by combining with the sulphurous anhydride) allows the liquid filtering through to the deep layers to free itself from the excess of acid which prevents development.[1]

Developing solutions of amidol produce images of a perfectly neutral grey-black. Their continuous use, at least in non-acidified solutions, tends to stain the fingers and nails a blackish brown.

362. Paraphenylene Diamine. This developer is sold either as the free base or as salts (usually the hydrochloride). The free base and the water-soluble salts may cause eczema wherever their dust touches the skin. This does not occur with the aqueous solutions of these salts, and it can be avoided, even with the dry product, by using it in the form of sulphate or other salt insoluble in pure water and soluble only in sulphite or alkali solutions.

The free base of paraphenylene diamine occurs in colourless crystalline plates, melting at 147° C. (296·6° F.), slightly soluble in water, fairly soluble in ether, and very soluble in alcohol. It is a weak solvent of silver bromide. The hydrochloride occurs in the form of colourless crystalline plates, decomposing without melting when heated. It is very soluble in water, slightly soluble in alcohol, and insoluble in ether.

In a plain solution of sulphite it develops the latent image, but only very slowly, development ceasing before the image has acquired sufficient contrast. As only a part of each grain has been developed, the image is formed by a deposit of very finely divided silver the density of which is usually insufficient.

In a solution made alkaline with an alkali carbonate it is possible to obtain an image of normal density, but such a developer has little energy and does not develop the shadow detail of a correct exposure completely. On the other hand, a very energetic developing solution results from the use of a caustic alkali, and even with a low sulphite content this solution keeps fairly well. The normal oxidation products formed during development are colourless.

363. Addition Products of Developers. *Metoquinone.* This definite combination, which must not be confused with a mixture of metol and

[1] It has also been shown (R. Namias, 1921; Fauchey, 1923) that sulphite solutions of amidol can be preserved by adding metol or hydroquinone (9 to 18 gr. per 20 oz.) which, however, plays no part in the development of the latent image, then taking place in an acid solution.

As sulphite sometimes contains small amounts of carbonate it is necessary to neutralize it if it is desired to ensure as perfect as possible uniformity in the developing solutions prepared from different batches of sulphite. To do this, add to the aqueous solution of sulphite a drop of a 3 per cent alcoholic solution of phenol-phthalein (colourless). The mixture generally turns pink and this colour is removed by adding drop by drop a dilute solution of bisulphite, stirring the mixture after each addition.

[2] Development is, however, very slightly accelerated by traces of bisulphite (Lumière and Seyewetz, 1910).

[1] This has been proved by covering the emulsion with a sheet of gelatine, when the developer filtering through this sheet develops the image on the surface of the emulsion.

hydroquinone, occurs in colourless crystalline flakes melting at 135° C. (257° F.), slightly soluble in cold water (1 per cent at 10° C., 50° F.), more soluble in hot water, very soluble in alcohol, and slightly soluble in ether or benzene. This compound is decomposed by mineral acids, even in dilute solutions, freeing the hydroquinone and yielding a salt similar to (or identical with) metol. Metoquinone dissolves well in alkaline solutions, and with addition of sulphite these solutions keep well. Metoquinone develops slowly in a non-alkaline sulphite solution. This solution does not oxidize readily; for rapid development it must be rendered alkaline, usually with an alkali carbonate.[1]

Chloranol and *Hydramine*[2] are no longer manufactured.

364. Sulphites, Bisulphites, and Metabisulphites. *Neutral Sulphites.* The only neutral sulphite commonly used in preparing developing solutions[3] is the neutral sulphite of soda, or sodium sulphite, supplied either as anhydrous or crystallized. One part of the former is equal to two parts of the crystals, both forms being assumed to be pure.[4]

Commercial sodium sulphite crystals generally contain from 80 to 90 per cent of the pure substance, i.e. 40 to 45 per cent of the pure anhydrous salt, whereas the anhydrous sulphite rarely contains less than 90 per cent of real substance. The anhydrous sulphite is supplied in a fine powder, like flour, and is not so heavy and bulky as the crystals. In the dry state it always keeps better than the latter (the powder clots together and prevents the circulation of air) the pieces of which are always more or less dehydrated, and are sometimes partially converted into carbonate on the surface.[5] Both forms contain a small amount of sodium sulphate and dithionate, produced by oxidation of the sulphite, which have no effect on photographic operations, and traces of hyposulphite and of sodium chloride. This sulphate is formed especially by oxidation in damp air.

Sodium sulphite is very soluble in cold water, and still more so in tepid water (about 23 per cent at 68° F. and 44 per cent at 104° F., these percentages being for the anhydrous salt). When boiled, concentrated solutions of sulphite deposit the anhydrous salt. No attempt should be made to dissolve sulphite in water which is too hot, for it will only dissolve after partial cooling. Contrary to what occurs with the crystals, anhydrous sulphite does not lower the temperature of the water in which it is being dissolved. This fact, and the rapidity with which it dissolves, cause the anhydrous salt to be preferred whenever the developing solution is being compounded for immediate use.

Sulphite solutions oxidize rapidly in air, and this change takes place more rapidly the weaker the solutions. As far as possible the preparation of stock solutions of sulphite should be avoided. If such stock solutions are absolutely necessary, and providing they are used as quickly as possible, a 20 per cent solution of the anhydrous salt may be made up and preserved by addition of hydroquinone or paraminophenol to the amount of about 5 gr. per 20 oz.

The oxidation of sulphite solutions is more rapid when they are alkaline. In making up a developing solution from several stock solutions it is necessary to avoid, as far as possible, dissolving the sulphite and the alkali together. Solutions of sulphite keep better if slightly acid, e.g. with the addition of a little bisulphite.

Strong acids decompose the sulphites, producing first bisulphite and then liberating sulphurous gas; this liberation does not take place when acetic acid is added to a solution of sulphite.

Sodium Bisulphite. Sodium bisulphite is usually obtainable commercially in the form of a concentrated solution sold as 35° Baumé: (density 1·320 at 60° F.), containing about 9 oz. of bisulphite ($NaHSO_3$) in 20 oz. (455 grm. per litre). This product is fairly constant in strength and contains few impurities. It deteriorates in the course of time, losing sulphurous acid (recognizable by its smell) and leaving

[1] It has been found, especially by A. von Hübl, that a mixture of 97 gr. metol and 31 gr. hydroquinone, after solution in sulphite and with the addition of 62 gr. anhydrous sodium carbonate (corresponding exactly with the neutralization of the sulphuric acid of the metol with formation of bicarbonate) or 22·5 gr. of caustic soda, produces a mixture equivalent to 100 gr. of metoquinone.

[2] Hydramine precipitates after a time in concentrated developers containing both hydroquinone and paraphenylenediamine.

[3] Potassium sulphite, owing to its greater solubility, enables more concentrated solutions to be made. It is then usually prepared, in the bath itself, from potassium metabisulphite.

[4] This proportion results from the comparison of the molecular weights: $Na_2SO_3 = 126$ and $Na_2SO_3 \cdot 7H_2O = 252$.

[5] When using sulphite crystals that are very thickly coated it is well to rinse them rapidly under a tap in order to dissolve away the outer crust and to dry them before weighing.

a crystalline deposit of sodium sulphite and acid sulphate.

It keeps better when less concentrated, and the occasional user will do well to dilute it with an equal quantity of water, being careful to take twice the amount for use.

Solutions of bisulphite and baths containing bisulphite must never be left in contact with zinc or with galvanized iron, for the bisulphite would be reduced to hydrosulphite, which may give rise to fog.

In the case of developing solutions made up from two stock solutions, the bisulphite is usually added to the stock containing the developer in order to enhance its keeping quality. Some of the alkali introduced when the two solutions are mixed is then employed in changing the bisulphite into neutral sulphite,[1] and this must be borne in mind when reckoning the quantity of alkali. Some formulae for one-solution developers, evolved by combining all the ingredients of two-solution formulae, include neutral sulphite, bisulphite, and an alkali (caustic alkali or carbonate), a practice which is without any logical basis.[2]

There is also commercially obtainable a powdered product which is a mixture of sodium metabisulphite ($Na_2S_2O_5$) and various impurities and is known as dry sodium bisulphite. This rapidly changes, especially in damp air, to a mixture of acid sulphate and neutral sulphite, which, when dissolved, re-form the sodium bisulphite, but in a quantity smaller than that originally present. Potassium metabisulphite is to be preferred to this product in spite of its higher price, unless it is possible to ascertain the amount of sulphurous acid contained in it at the time it is being used.[3]

[1] With the formation of bicarbonate when the alkali is a carbonate.

[2] When preparing developing solutions on a large scale, it may sometimes be of advantage to dispense with the neutral sulphite, producing it at the time in the bath from the commercial bisulphite solution and from an alkali (sodium carbonate, or soda lye, for instance). Some varieties of sodium bisulphite contain traces of iron salts, which, with various developers, especially pyro, may give rise to more or less dark stains, by a process similar to that in the production of writing ink.

[3] A solution of sodium bisulphite can also be prepared from sodium sulphite and an acid, such as sulphuric or acetic acid. Such a solution contains in addition sodium sulphate or sodium acetate, which do not interfere with the use of the bisulphite. To do this, 9½ oz. of anhydrous sodium sulphite are dissolved in about 25 oz. of tepid water, and with constant stirring there is added 3½ oz. by weight (about 16 drams by volume) of concentrated sulphuric acid previously diluted to about 5 oz. and cooled. The resulting solution of bisulphite when diluted with water to make 35 oz. will be about equal to the commercial solution at *half strength*. It must be remembered that *sulphuric acid* (oil of vitriol) is a highly corrosive fluid and must be handled with the utmost care. It must never be diluted by pouring water into the acid (risk of spurting), but by gradually adding very small quantities of the acid to the water with constant stirring. A container of thin glass or thin porcelain must be used, owing to the great heat developed. Sulphuric acid should be kept in a bottle with a glass stopper, and the bottle should be stood in a saucer to catch drippings.

The use (and especially the carriage) of sulphuric acid can be avoided by replacing it by a solution of sodium *bisulphate* (not bisulphite). This is a solid salt which is non-corrosive, and cheap, and of which the acid effects are practically the same, when 13 parts by weight of the bisulphate are used in place of 5 parts by weight of concentrated sulphuric acid.

[1] The crust which covers the crystals that have been kept a long time is composed of about 75 per cent potassium sulphate and 25 per cent potassium dithionate.

[2] The dissolution of caustic soda in water liberates considerable heat: use cold water and shake constantly to avoid local overheating which may break the container or cause the caustic liquid to spurt out.

Potassium Metabisulphite. Potassium metabisulphite ($K_2S_2O_5$) occurs in large, colourless crystals, which keep fairly well[1] and are very soluble in cold water (about 30 per cent). The solution is partially decomposed when hot, and should therefore always be prepared with cold water.

The equivalence between sodium bisulphite lye and potass metabisulphite is as follows—

1 oz. potassium metabisulphite = 2 oz. 6½ drams (fl.) sodium bisulphite solution of 35° Bé.

1 oz. (fl.) bisulphite solution = 525 gr. potassium **meta**bisulphite.

The table on page 247 shows the quantities of the usual alkalis required to neutralize sodium bisulphite and potassium metabisulphite, all products being assumed to be pure.

Under these conditions 100 volumes of soda bisulphite lye produce about 60 parts by weight of anhydrous neutral sulphite; and 100 parts by weight of potassium metabisulphite produce 142 parts of neutral potassium sulphite, equal to 113 parts of anhydrous sodium sulphite.

365. Alkalis and their Substitutes. *Caustic Soda.* Caustic soda is sold in the form of plates, sticks, or lumps, or as a concentrated solution or lye. In the solid state[2] it is available in two qualities, common or pure (called "spirit" soda, because alcohol is used to separate the carbonate forming its chief impurity). The white opaque pieces of soda are deliquescent,

and in moist air absorb carbonic acid, being partly converted into carbonate. Caustic soda is extremely corrosive; the fingers should be rinsed after handling it, and it should not be crushed unless the eyes are protected by goggles or the soda covered with a cloth. The soda and its solutions must not be kept in glass-stoppered bottles; corks soaked in paraffin-wax must be used.

For Neutralizing	Soda carbonate anhydrous	Soda carbonate cryst.	Potassium carbonate	Caustic soda	Soda lye 36° Bé	Caustic potash	Potash lye 36° Bé
	Gr.	Gr.	Gr.	Gr.	Minims	Gr.	Minims
100 gr. potassium meta-bisulphite . . .	95	258	124	36	90	50½	113½
100 minims soda bisulphite lye 35° Bé. . . .	50	137	65½	19¼	48	26½	59

For use in quantity, caustic soda is best obtained in the form of lye, which is cheaper and always purer. Lye of 36° Bé. (density, 1·332 at 60° F.) contains 40 per cent of caustic soda (NaOH); the lye of 40° Bé (density 1·383) contains 48 per cent. The use of one or other of these lyes allows of more correct dosage than the lump soda, which is always more or less hydrated.

Caustic Potash. Caustic potash has the same appearance and the same commercial forms as caustic soda, and its properties are closely similar. In handling it the same precautions as for caustic soda must be used. Potash lye of 36° Bé. contains 44·5 per cent of caustic potash (KOH).

Caustic Lithia (LiOH). White powder,[1] which does not deliquesce but must, nevertheless, be kept from air to avoid carbonation. It is much less soluble in water than the alkalis proper (about 7 per cent at 60° F.). With some developers, e.g. paramidophenol, it may be advantageously used (in much smaller quantity) in place of the caustic alkalis (A. and L. Lumière, 1894).

Ammonia. From various points of view, ammonia may be compared with the caustic alkalis. It is a solution of ammonia gas in water, from which the gas is constantly tending to escape. The strength of the solution is therefore continually decreasing, thus leading to great uncertainty as regards the quantity actually present.

Ammonia of 22° Bé[1] (density 0·923 at 60° F.) contains 19 per cent of ammonia gas (NH_3), i.e. 39·5 per cent of the hypothetical hydrate (NH_4OH). English photographic formulae usually mention the saturated solution (density 0·880), containing about 35 per cent of gaseous ammonia, but much less stable than the one above. The loss of gas can be greatly reduced by diluting the solution, when purchased, with an equal quantity of water, twice the amount being taken for use.

Ammonia was the first alkali used with pyro prior to the introduction of gelatino-bromide emulsions, but being a solvent of silver bromide, it is apt to produce dichroic fog, so that its use has been discontinued except for a few special purposes.

Sodium Carbonate. Sodium carbonate is supplied either as an anhydrous powder (Na_2CO_3), called Solvay salt, and having the appearance of flour, or as colourless crystals (Na_2CO_3, 10 H_2O). Assuming both products to be pure, their equivalence is—

1 part of anhydrous sodium carbonate = 2·7 parts crystal carbonate.

1 part crystal sodium carbonate = 0·37 parts anhydrous carbonate.

The anhydrous carbonate tends to absorb atmospheric moisture, whereas the crystals effloresce; both tend to change to a stable form, the monohydrate (Na_2CO_3, H_2O), but the error from these variations is much less in the case of the anhydrous salt than in that of the

[1] Caustic lithia is sometimes supplied as crystals LiOH, $2H_2O$ containing only 40 per cent active substance.

[1] The Baumé hydrometer mentioned here is the one used for liquids less heavy than water.

crystals.[1] Both salts, but especially the crystals, absorb the carbonic acid from the air and thus partially change to bicarbonate.

The soda carbonate supplied as "washing" soda ("sal soda" in U.S.A.) for household use contains a large proportion of inactive sulphate and an excess of water; it should not be used.

Sodium carbonate is very soluble in water. A saturated solution at 60° F. contains more than 16 per cent of the anhydrous salt and 44 per cent of the crystals. At 86° F. these strengths are 36 per cent and 98 per cent respectively.

Potassium Carbonate. Potassium carbonate is supplied in the form of a white, powdered or granular, salt, which is highly deliquescent and must therefore be kept in a sealed container.

At 60° F. a saturated solution contains 81 per cent of anhydrous potassium carbonate (K_2CO_3). At the strengths usually employed in photographic developers the hydrolysis of the potassium carbonate (separation into caustic potash and bicarbonate) liberates a much greater amount of caustic alkali than does the hydrolysis of sodium carbonate, so that potassium carbonate gives developing solutions of greater energy. As its price is considerably higher than that of sodium carbonate, the latter is sometimes substituted, with the addition of about 10 per cent of its weight of caustic soda.

Ammonium Carbonate. Ammonium carbonate, used in making up some developers for warm-tone lantern slides, is supplied in the form of a salt, coming between neutral carbonate and bicarbonate, called ammonium sesquicarbonate ($(NH_4)_2CO_3$, 2 NH_4HCO_3 . 2 H_2O), and forming white, waxy-looking lumps, smelling strongly of ammonia owing to their gradual conversion into bicarbonate. This salt is often covered with a white crust which must be rinsed off and the lumps rapidly dried before weighing. It is very soluble in cold water (about 20 per cent) and decomposes much below boiling point, so that its solutions must be prepared with cold water.

Tri-basic Sodium Phosphate. This salt (Na_3PO_4 . 12 H_2O) must not be confused with ordinary sodium phosphate ($Na_2H\ PO_4$. 12 H_2O) or disodic phosphate, which occurs in almost the same form of colourless, prismatic, efflorescent crystals. It is partially hydrolyzed in an aqueous solution and thus supplies a permanent reserve of caustic soda without the same consequences as regards the disintegration of the gelatine (A. and L. Lumière, 1894).

Borates of Soda. Among the numerous varieties of borates of soda,[1] use is made of borax and metaborate of soda.

Borax is marketed in colourless crystals $Na_2B_4O_7$, $10H_2O$, slightly efflorescent, and sparingly soluble in cold water (7 per cent at 59° F.); its activity in developing baths is intermediate between that of the carbonates and of the bicarbonates. It is chiefly used in preparing slow-acting developers.[2]

Metaborate of soda occurs in the form of effiorescent, colourless crystals $NaBO_2$, $4H_2O$, very soluble (33 per cent at 66° F.) in water, melting at 122° F. in their water of crystallization. When acted on by atmospheric carbonic acid, this salt, either in the solid state or in solution, gradually changes into a mixture of borax and of sodium carbonate. Its photographic activity is slightly superior to that of the carbonates.[3]

The addition of a caustic alkali to a solution of borax changes this salt into metaborate.

Sodium Metasilicate. Sodium metasilicate (Na_2SiO_3, $5H_2O$), which is used in the U.S.A. as a household detergent under the name of Metso, has been suggested as a substitute for trisodic phosphate and for sodium metaborate.

Acetone. Acetone is sometimes used to liberate a part of the soda of the sulphite, and thus to dispense with the use of an alkali. It is a colourless liquid with a peculiar smell, very volatile, inflammable, miscible in all proportions with water, alcohol, and ether.

Acetone is an excellent solvent of many resins and is one of the best solvents of celluloid. When a photographic film is immersed in a mixture of water and acetone, the celluloid swells without dissolving, and the gelatine

[1] This hydrate, known as *desiccated* sodium carbonate, is a common commercial form in the United States, and is often mentioned in American formulae; 1 part of this salt is equal to 0·85 parts of the anhydrous carbonate, and to 2·25 parts of the crystal.

[1] With phenolic developers having two hydroxy groups in the ortho position (pyrocatechin, pyrogallol), the borates produce compounds of which the developing power is very weak.

[2] Boric acid, which changes carbonates into borates, is sometimes used as a restrainer in developers rendered alkaline by a carbonate; borax can play the rôle of a restrainer in developers rendered alkaline by a caustic alkali.

[3] An advantage of metaborate of soda and of trisodic phosphate is that there is not, as with carbonates, any liberation of gases when an amulsion impregnated with developer is placed in an acid stop-bath, there being thus less danger of blisters.

emulsion coating tends to detach itself (Lumière, 1902). For this reason developing solutions containing acetone should not be used for films.

366. Practical Equivalence of the Usual Alkalis. The normal amount of the various caustic alkalis required for various developing agents is easily calculated (assuming pure products to be used) on the basis of formation, in all cases, of the monophenolate, and, in the case of the aminophenols, of saturating the acid of the salt employed. This method of calculation fails with paraphenylene diamine; the quantity indicated for this particular case is one ascertained experimentally (J. Desalme, 1911).

NORMAL AMOUNTS OF CAUSTIC ALKALIS REQUIRED WITH VARIOUS DEVELOPERS

For 10 grm. Developer	Caustic potash	Caustic soda	Caustic lithia
	Grm.	Grm.	Grm
Hydroquinone	5·10	3·63	2·18
Pyro	4·45	3·18	1·91
Paraminophenol (free base)	5·15	3·68	2·21
Paraminophenol hydrochloride	7·70	5·50	3·30
Metol	6·50	4·65	2·79
Glycin	6·70	4·80	2·87
Paraphenylene-diamine (free base)	—	16·0	—

Considerations of chemical equivalence, based on the power to neutralize a given quantity of an acid, do not permit of equivalence being worked out between the caustic alkalis and their substitutes, particularly as the amounts of sodium carbonate and potassium carbonate equivalent to a certain strength do not seem to be equivalent at another strength of the same developer, and furthermore there is no proportionality between the equivalent amounts as regards different developers.

It is only possible to consider as equivalent those quantities of alkalis that bring the developer to the same degree of alkalinity, i.e. to the same pH value (§ 354).

The following table (after Lumière and Seyewetz, 1906) indicates the various amounts required with various developers as compared with 10 grm. of caustic soda.[1]

	Caustic soda	Sodium carbonate anhydrous	Sodium carbonate crystals	Potassium carbonate
	Grm.	Grm.	Grm.	Grm.
Hydroquinone	10	96	260	75·5
Pyro	10	34·2	92·5	32·4
Metol	10	34·2	92·5	28·2
Glycin	10	122	330	74·5
Chemically equivalent quantities	10	26·5	71·5	34·5

[1] In 1925 Sheppard and Anderson showed that, at east as regards metol-hydroquinone developers, there is a practical equivalence between the quantities that are chemically equivalent of the carbonates of soda and potassium (*chemically pure*); only with *very much curtailed* development does potassium carbonate seem more energetic than sodium carbonate. It should, however, be noted that ordinary potassium carbonate contains traces of caustic potash, which distinctly increase its activity.

In a metol-hydroquinone developer, K. Tchibissof (1929) ascertained the approximate equivalence of 1 grm. caustic soda and 18 grms. anhydrous sodium carbonate. Even so, the negatives developed with caustic soda had in the shadows some details that were not visible in the negatives developed with carbonate.

367. Alkali Bromides. *Potassium Bromide.* Small anhydrous crystals (KBr), colourless or white, cubical in shape, very soluble in water (over 60 per cent at 60° F.), insoluble in alcohol; the chief impurity is potassium chloride, which, however, does not interfere with the action of the bromide. Potassium bromide is a perfectly stable salt.

Sodium Bromide. Sodium bromide is a very deliquescent salt, of very variable composition. It is appreciably cheaper than potassium bromide, but can only be used where sufficient quantities warrant the trouble of ascertaining the quantities to be used, the salt being made up into stock solutions as soon as purchased.

Ammonium Bromide. This occurs in the form of small colourless crystals of anhydrous salt (NH_4Br), which is slightly deliquescent, and turns yellow on long exposure to light. It is even more soluble in water than potassium bromide and is slightly soluble in alcohol. It slowly decomposes at boiling point. It is used in some formulae for warm-tone developers.

(*e*) THE PRACTICE OF DEVELOPMENT: GENERAL NOTES

368. Preliminaries. Before beginning the development of a negative it is necessary to see that all solutions and utensils are at hand. The tanks or dishes should be so arranged that the negative being developed may be transferred from one to another in their proper sequence.[1] They should be charged with the various baths required, care being taken that the temperature of these baths is about the same as that of the dark-room, which temperature should, whenever possible, be between 60° and 65° F.[2]

[1] The dishes containing the fixing bath must be placed so that no splashes can reach the developer.

[2] In the case of development in deep tanks, in which the bath is kept when not in use, the scum on the surface of the liquid must be skimmed off by passing a piece of filter paper over the surface, thus collecting all the floating impurities capable of adhering to the

When the various baths, and particularly the developer, are prepared at the time of use by mixture or dilution of stock solutions, the water used for dilution should have been kept for a while in the dark-room in order to acquire its temperature. In all cases be careful not to dilute with water straight from the tap. The tap water is usually colder than the developing solution, and it also contains air which separates in bubbles when the mixture becomes warm; these bubbles may adhere to the gelatine of the negatives, preventing the developer from acting at these points.[1]

To ensure the perfect uniformity of a mixture it is necessary to stir vigorously (§ 278). On no account should the various liquids to be mixed be poured separately into a shallow dish, where it is very difficult to obtain a uniform solution even after prolonged agitation. It is still more important to avoid a direct addition to the bath during development of negatives. When developing in a dish, the developers must be poured back into the graduate, and any required additions then made. When developing in a tank, the negatives must be removed, and the developer stirred energetically after adding the new solutions.

It is essential that every care be taken to ensure uniformity of treatment during the various manipulations. For this, the emulsion must be wetted almost simultaneously at all points by a perfectly uniform developer, and the plates or films must be then moved several times.

It is specially essential that the solutions used should be perfectly clear, as any suspended matter produces a spot where it settles on the emulsion. All stock solutions and baths previously in use should therefore be poured off from any sediment.

369. Wetting Plates and Films before Development. In quantity work with sensitive material in long bands (e.g. cinematograph film), the adherence of air-bubbles to the gelatine is usually avoided by wetting in water containing a little alcohol (industrial spirit), and sometimes also various substances facilitating the wetting emulsion when the plates or films are immersed. The bath must then be stirred thoroughly to ensure uniformity of temperature. It is advisable before starting work each time to throw away a given quantity of the solution and to replace it with an equal volume of fresh bath containing *no bromide*.

[1] This trouble is particularly likely to occur in stand (slow) development owing to the considerable change in the temperature of a developing solution which at the start is much colder than the dark-room.

of parts where there are traces of grease (contact of fingers or of lubricating oil from feeding mechanisms).[1] For this it is possible to use very dilute solutions of the wetting agents used in textile manufacture: saponine, sulphoricinates, and sulphonated fatty alcohols (Ocenol, Lorol, Igepon, etc.) These substances can also be added to the developer (§ 357) or to the desensitizing bath (§ 333). Except in this last case, preliminary wetting has usually no advantage in the case of sensitive material in cut sizes.[2]

Preliminary wetting accelerates development in a concentrated developer and slows it in a dilute one. With some developers it is possible to ascertain by methodical tests the strength required in order that the duration of development should not be affected by the preliminary wetting. Any tanning of the gelatine[3] reduces the speed of development only very slightly.

In every instance where the emulsion has been wetted before development it is necessary to rock the developing dish energetically for a few moments[4] or to move the plate-holders or film-hangers in the solution so as to ensure the uniform replacement of the water or solution impregnating the gelatine by the developer.

[1] If there is reason to fear spots of mineral oil, it is better to clean the emulsion with a solvent, for which purpose benzene (benzol) should be chosen (G. E. Matthews and J. I. Crabtree, 1928). Allow this solvent to evaporate before wetting with water or with developer.

[2] It may, however, be of advantage to clean before development plates protected against halation by a coating applied to the back. As a rule, all that need be done is to wipe the backing off the centre of the plate by holding it by its edges and rubbing it on a piece of thick felt well soaked in water and placed in the middle of a large dish. The remainder of the backing can be removed after development.

[3] It has been suggested (A. P. Agnew and F. F. Renwick, 1918) that the gelatine be tanned before development in a bath containing a very small quantity of formaline and a fairly large proportion of sodium sulphate or various other salts (disodic phosphate, oxalate, sodium tartrate) which prevent swelling in this bath (§ 356). As a rule, the use of a developing solution heavily dosed with one of these salts and of an alum fixing bath suffices to prevent any excessive swelling or melting of the gelatine, avoiding at the same time the troubles often attaching to the use of formaline.

[4] Use has long been made of rocking devices, moved by clockwork or an electric or hydraulic motor, to ensure the automatic rocking of the bath during development. If such an arrangement is employed, care must be taken to have a comparatively long period of oscillation. Too rapid rocking may produce in the dish stationary waves (waves which are motionless in relation to the dish) and then the image may develop in equidistant, vignetted bands, separated from each other by bands of scarcely developed emulsion.

370. Immersion in the Developing Bath. When developing a plate in a dish, hold it by its edges, film upwards. Large plates must be supported on the four spread fingers of the right hand and held by the thumb placed on the extreme edge. For very large plates the help of an assistant is almost indispensable. The dish is tilted to collect all the developer along one side. An edge of the plate is then rested on the bottom edge of the dish opposite to the one where the developer is lying. The dish is then let down into the horizontal position, and, at the same time, the plate is lowered to the bottom of the dish. The plate is thus swept almost instantaneously by the liquid. The dish is gently rocked, and care is taken to see that the plate is uniformly wetted. If desensitizing has not been done before development, the dish is covered with a piece of card or cover (a larger dish can serve) unless, of course, it is necessary to watch for the first appearance in order to apply the Watkins system of factorial development (§ 344). Unless the worker is skilled, it is best to avoid developing several plates together in one dish, as there is a risk of damage from one plate sliding over another.[1]

About 3 oz. of developer is required in a dish of half-plate ($6\frac{1}{2} \times 4\frac{3}{4}$ in.) size, and proportionate quantities in dishes of other sizes. It may be well for a beginner to increase these amounts by one-third in order to avoid any irregularity in the wetting of the emulsion by the developer.

When developing cut films in a dish it is best to choose a dish sufficiently large to accommodate two films side by side, and to have plenty of developer in order that the films be well covered in spite of their tendency to curl. The film is slid into the developer, emulsion upwards, and, while held by two adjoining corners, is drawn to the half of the dish farthest from the operator. Any bubbles that may be adhering are removed by touching them lightly with the finger. As soon as this film is well wetted with developer several other films may be introduced in succession, each being drawn to the back of the dish, leaving the front half free, until the last film of the batch has been introduced. The films become very soft, and must be handled with care. They are taken one by one and transferred in reverse order to the front half of the dish, and this transfer from one pile to the other is continued until development is completed.

When single frames or hangers are used with plates or films developed in a tank, care must be taken to see that air-bubbles are not imprisoned in the frame, as such bubbles, when rising, may adhere to the emulsion. To do this, the frames are immersed one corner first, obliquely, and they are gently moved up and down immediately after immersion. The plates or films are introduced with the emulsion facing the operator, and are put in at the back of the tank and then brought to the front so as to leave the back free for the others. By proceeding in this way there is no danger of scratching the emulsion of one negative by the frame containing the next.

After inserting the last frame, the frames are separated as far as possible and moved up and down singly from time to time in order to bring fresh solution in contact with the emulsion. In doing this, each frame must be drawn away from the one behind it so as to avoid scratching the gelatine of the latter.

If the frames are much narrower than the tank they all must be pushed up against one side to avoid retarded development of such parts of the emulsion of a plate or film as would come too close to the vertical side of another frame. Unless the frames are very widely separated from each other it is necessary to avoid developing together negatives of different sizes.

When development is done in vertical, grooved troughs, the developer should be emptied from time to time into a jug, from which it is at once poured back into the tank. Instead, the tank, if fitted with a watertight lid, may be reversed every two minutes.

Owing to the variety of the appliances intended for the development of roll film, the only reference which can be made is that the instructions issued with them should be followed.

371. Local Development. During the development of a negative of large size a skilful operator can modify the image by localizing the action of the developer. This is specially the case with negatives which have been desensitized, for it is obvious that the image must be very plainly visible when carrying out applications of this kind.

Development is done in a comparatively slow-acting bath, and as soon as the image appears, development of the parts which tend to come

[1] It is possible to obtain dishes with low dividing ridges on the bottom for the simultaneous development of several stereoscopic plates, and separators of moulded material permitting several plates of small size to be developed together in an ordinary dish.

up too quickly is delayed by the application of a solution of bromide. On the other hand, the appearance of the insufficiently dense parts can be hastened by applying a more energetic developer (more concentrated, warmer, or more alkaline), using for the purpose a soft brush or tuft of cotton-wool, according to the size of the image. There is no need to follow the outline of the image very closely if the precaution is taken of applying the solution in several stages, alternated by washing in water, followed by immersion again in the developer. In this way the various parts merge into each other, and a harsh edge is entirely avoided.

This method is particularly suitable for obtaining the correct tone value of the sky in landscapes photographed without special precautions. The negative is held sky downwards during the local application of the bromide, thus preventing the bromide from running on to the image of the landscape part. With practice the same method can be applied to more difficult cases, such as interiors or badly-lit portraits, where the parts to be treated are more complicated in their distribution.

It may be added that the choice of a suitable method in the first place is generally sufficient for the production of a satisfactory negative, without recourse to these dodges, which are always risky in the case of subjects which, in the event of an accident, could not be re-photographed.

372. Factors Influencing the Duration of Development. It must first of all be noted that there is no *single* optimum time for perfect development for a fixed set of conditions (subject, type of emulsion, composition and temperature of developer). Instead, there is an infinite number of normal times of development which range between two fixed limits, each time included within those limits being the best for some conditions of printing, type of positive sensitive material (§ 503), and mode of printing, i.e. by contact or enlargement in various ways). To reproduce a complete scale of tones, every positive emulsion requires a negative of which the extreme densities transmit light in a definite ratio, which ratio varies with the method of printing employed. For example, enlargement by artificial light with a condenser needs a notably less contrasty negative than for contact printing on the same material. For contact prints, positive emulsions of great contrast yield the best results with negatives in which the extreme opacities are in the ratio of 10 : 1, while print-out papers give prints with a complete tonal range, i.e. from white to black, only if the range of opacities of the negative is about 60 : 1. As development progresses, the contrasts increase very quickly at first, then more and more slowly, the negative thus passing through a series of stages each suitable for a specific purpose.

For a negative to be capable of giving good results, all that is necessary is that the duration of development to be included within two wide limits, which limits further vary with the range of light-intensities in the subject photographed. All that is then necessary, once the negative has been completed, is to select an exactly suitable mode of printing.

The amateur, who through laziness confines himself to one method of printing, e.g. contact printing on a certain type of print-out paper, or the professional portraitist, limited to a certain style of picture, and therefore compelled to select one of a few methods of printing, or, finally, the cinematographer, who, owing to a curious anomaly, has at his disposal usually only one type of positive film (positive film by the various makers having nearly the same characteristics)—all these workers are compelled to produce in all cases negatives the extreme opacities of which are, if not exactly in the same proportion (a condition difficult to satisfy),[1] still in proportions little different from one another, or, what comes to the same thing, negatives having extreme densities differing by nearly the same amount. This condition is all the more difficult to fulfil, because the eye is a very bad judge in this quality, and so the operator is often a long way off the mark, unless the subjects photographed are very similar in character, as is the case particularly in studio portraiture.

Plates or films exposed through the back have their development somewhat slowed in the shadows, if exposure has been short; with a normal exposure no difference is seen between plates exposed the right way or the wrong way round.

[1] Within certain limits it is possible to develop a negative in such a manner that the difference between the extreme densities should have a given value if one knows the values of the exposures corresponding to the optical image, and if one has, for the same emulsion exposed to a light of the same quality, drawn the density curves corresponding to the various durations of development in the same developer. Ingenious graphic methods have been suggested for resolving such problems (W. A. Heidecker, 1925).

373. In addition to the above circumstances, the duration of development (by which a negative of a given subject obtains the desired degree of contrast) depends independently on the following:

1. The negative emulsion used. Equivalent times of development may vary as from 1 to 8 according to the type of negative emulsion. Ultra-rapid plates generally develop more slowly than slow ones, and for an equal degree of sensitivity films develop more slowly than plates. The duration of development may vary as from 1 to 3 with successive batches of a given brand of plate or film, and there is no means of knowing these variations in advance.

2. The composition of the developing solution, its dilution, and its temperature. While it is fairly easy to keep the temperature of a developing bath almost constant,[1] the composition of the solution is less under control (except in commercial establishments where the products used are carefully titrated) because of the varying content of active substance in each of the products employed. Variations of even greater magnitude result from the progressive exhaustion of the developing solution and its growing strength in bromide, when a considerable number of plates or films are developed in the same portion of solution.

3. The agitation of the bath (§ 343). In all cases where it is desired to obtain uniformity of development of several negatives developed for the same duration, the agitation of the bath under identical conditions must be seen to.

It will be noticed that the time of exposure is not mentioned among the factors influencing the duration of development. Unless very considerable error exists, the time of exposure does not in fact influence the contrasts of the image to a sufficient degree to enable it to be allowed for before too late. In the case of a very considerable error in the time of exposure, it is the composition of the developing solution that must be modified, and there is then no comparison possible between the durations of development in baths of different compositions.[1]

In general, at least for exposures differing little from the normal, the duration of exposure affects chiefly the density of the image in the shadows, whereas the duration of development affects chiefly the *difference* between the shadow and high-light densities, or, in other terms, the *ratio* of the corresponding opacities.

374. Judging the End of Development. There is no sure means for gauging the moment when a negative in course of development reaches the degree of contrast requisite for a given purpose. At most it is possible, by using as a basis previous experience acquired under exactly the same working conditions, to arrange a duration of development giving an image with the same characters as one previously obtained.

The judging of contrast solely by visual inspection of the image leads only to misleading results, except in the case of very long practice, limited to the photography of subjects of similar character. Judgment is apt to be deceived by the presence of the residual silver bromide, unequally distributed over the image, and by

[1] It is, for instance, easy to arrange a water-bath of 1 to 2 gal. capacity (using preferably an earthenware tank with thick sides) in which the dish can be placed, raised on hollow bricks if necessary, or in which a light wooden frame can carry the half-immersed dish. Some time before beginning development the tank is filled with water at the desired temperature (e.g. 65° F.) by mixing suitable quantities of cold and hot water. The bottles containing the various solutions are placed in this water-bath to acquire its temperature. Under these conditions, and even if the surrounding temperature differs by 15 or 20° F. from that of the developing solution, the latter temperature will not usually vary more than 2° F. in half-an-hour, which is a longer time than is required for normal development.

[1] With some very special emulsions, of which the characteristic curve (§ 202) has a very extended under-exposure region and which, by prolonged development in a bath without bromide, allow of obtaining high gammas without fog, it is possible (in the case of subjects of low contrast) to compensate for such marked under-exposure as causes all the exposures to fall in the region of under-exposure. This is done by prolonging development very considerably (F. F. Renwick, 1913; R. Luther, 1923), and thanks to this peculiarity it is often possible to obtain on plates of medium speed better results of high-speed subjects than on ultra-rapid plates. The negatives thus obtained have not always sufficient contrast to enable them to be used as they are, but they become usable after *proportional* intensification of all their densities. In any case, a somewhat imperfect rendering of the deepest shadows must be expected. For every emulsion and every developing solution there is, at a given temperature, an optimum duration of development at which the image of a greatly under-exposed region is differentiated from the bare emulsion, and which, in consequence, enables the maximum sensitiveness of the emulsion to be estimated (E. R. Bullock, 1926). This optimum duration usually leads to an excessive contrast that would prevent the normal use of the negatives (S. O. Rawling, 1932). Beyond this optimum duration the separation of exposures differentiated in the image falls off; the less exposed regions tend to disappear progressively. This disappearance is often followed by reversal, the emulsion fog becoming more intense than the under-exposed portions. The density of the fog at the point of disappearance varies according to the working conditions.

the coloured light of the dark-room. Red light, especially, tends to exaggerate the contrasts, and beginners nearly always tend to stop development too soon. When developing by examination by transmitted light, it is difficult to avoid the error of over-developing an under-exposed negative and under-developing an over-exposed one, because the eye can more easily estimate the average density of the negative than the contrast between the extreme densities.[1]

The beginner is sometimes advised to stop development when the portions of the emulsion which have been protected by the rebates against the action of light during exposure begin to veil over. Or he is advised to stop when the image begins to show at the back of the plate or film. Both these methods are most misleading.

If, with a correctly compounded developer, the development of a plate or film in a good state of preservation (on which only the light from the lens has acted) does not proceed on being continued beyond the point where fog appears, the latter being capable of increasing more rapidly than the image, it is quite possible for an image to fog before its development is complete. This occurs if the developer is excessively active, and especially if it does not contain enough bromide to avoid chemical fog with the emulsion used, or if the emulsion has been fogged when loading the camera or during the first instants of development.

On the other hand, an emulsion coating which is thin and poor in silver will always allow the image to appear more quickly at the back than one thick and rich in silver. This will lead to development being stopped before a sufficient degree of contrast has been attained. Even when the same emulsion is in constant use, so that the richness in silver and consequent translucency of the coating remain almost the same, the appearance of the image at the back can at most indicate only that the high-lights have reached a certain density. It is not, however, a given density in the high-lights which must be sought for, but a given difference between the extreme densities. If the subject is weak in contrasts, or if the exposure was full, the image of the shadows will be much denser when the high-lights reach a given stage than in cases where the subject is contrasty or the exposure on the short side. But it should be noted that if a little silver has been reduced in the protected portions, when the image has appeared on the back, the negative (unless considerably over-exposed) is probably sufficiently contrasty to be usable, at least with papers suited for negatives of poor contrast. It may be said that this indication is of some value for the beginner, a value more or less similar to that of other recommendations made to him with the same object.[1]

When examining plates by transmitted light, it is necessary to be careful to hold them by the edges only, and films by two corners, avoiding as much as possible placing the fingers on the surface. The negative must not be held near the lamp longer than is needful (especially when the lamp is hot), in order to avoid melting the gelatine. Unless the emulsion has been desensitized, examination must not be too protracted, especially at the beginning of development, otherwise the image may be fogged.

375. Rinsing the Negative after Development. When development is considered to be complete, the negative must be transferred quickly to a tank or dish of water, or held under a jet of water of moderate pressure, in order to free it from the greater part of the developer adhering on its surface, prior to fixing. As a rule, a few seconds suffice for this brief rinse. In the more usual case, where fixing is done in an acid fixing bath, this rinsing in pure water is sometimes replaced by placing the negative for a few minutes in water rendered slightly acid (by 1 per cent of hydrochloric acid or 5 per cent of liquid sodium bisulphite), so as to neutralize the alkalinity of the developer, and thus to avoid the latter neutralizing the fixing bath. This acid bath is often called a *stop-bath*, because

[1] The dark-rooms of some professional portraitists contain a *negative-comparator*. This is a long lantern, closed in front by a sheet of ground-glass on which are permanently fixed two negatives, one suitable for printing on a paper of medium contrast, and the other on a paper of soft contrast. Between these two specimen negatives there is a space for the negative to be compared. This device is usually lit by white light for comparing completed negatives. It would be quite as easy to illuminate it with red light, but then the specimen negatives would need to be unfixed ones. Such unfixed negatives can be rendered stable (after washing in clean water) by soaking for a few minutes in a solution of potassium iodide (§ 394), followed by a rinse in clean water.

[1] It is hardly necessary to point out that observation of development by inspection of the back is not possible with plates having a special substratum for preventing halation, nor with plates and films with several coats of emulsion.

it arrests development.[1] The negative is then fixed (Chapter XXIX).

When development has been carried out under conditions which render washing difficult after fixing (as on expeditions), the actual fixing may be postponed by adopting *deferred fixation* with an acid bath followed by a brief rinse. It is then preferable to use a volatile acid (acetic acid of 2 per cent strength) or a weak acid (boric acid of 5 per cent strength), as a strong non-volatile acid would involve the risk of disintegrating the gelatine in the course of time if it has not been completely eliminated. After soaking in this bath for at least five minutes, the negatives are rinsed in clean water and put to dry.

376. Critical Examination of Finished Negatives. Although, in the normal course of operations, negatives cannot usefully be examined until fixed, and preferably only after washing and drying, it seems inadvisable to postpone to a subsequent chapter considerations so intimately connected with development.

A negative of which the exposure has been "correct" should show, even in the image of the deepest shadows, a silver deposit greater (however slightly) than the chemical fog appearing in the parts of the plate or film which have been covered by the rebates or turn-buttons of the dark-slide.[2] This comparison is best made by laying the dry negative, emulsion side down, on a sheet of white paper in a well-lighted place. If the negative is very dense the examination is best made by transmitted light in front of a sheet of ground glass. Care should be taken not to choose for the comparison a protected portion adjoining a region of very great density, since the chemical fog may be accompanied by irradiation or halation.

Any great difference between the density of the image of the shadows and that of parts covered by the rebates indicates that exposure has been longer than necessary. Unless the possible maximum of correct exposures has been exceeded, no harm will have been done other than an increase of the time needed for printing.

[1] The use of such a bath is specially recommended when using tanks for daylight development (without a dark-room) where fixing is done by daylight; negatives thus treated must not be examined before they are completely fixed. In hot countries it is necessary to use a neutral tanning stop-bath (§ 391).

[2] Only if this is so is it certain that light has acted in the image of these shadows, and thus more definitely in the image of the somewhat lighter tones, so that the modelling of the shadow-detail has been registered as completely as possible.

In an over-exposed negative, the contrasts in the high-lights are distinctly reduced, but owing to the considerable density of these parts of the image, it is not possible to make sure of this except by inspection of prints *correctly* printed on the paper best suited to the negative in question.[1]

377. Beginners, and also some experienced workers, somewhat readily confuse the notions of density and of contrast. Just as it is possible at the sea-shore, i.e. at a very low altitude, to find a very steep path, and a flat or only very gently rising road in a high mountain region, so too it is possible to have a very thin negative (density almost nil in the shadows) which is nevertheless very contrasty (very great difference between the extreme densities). On the other hand, a very dense negative (very great density in the image of the deepest shadows) may be very weak (small difference between the density of the high-lights and that of the shadows).

The usual photographic terminology is rather confusing as regards the designation of the characters of the negative, one and the same term being sometimes applied to very different characters. The following definitions will be adhered to in this work, though their arbitrary character is fully realized.

CLASSIFICATION OF NEGATIVES

According to the Density of the Shadows	According to the Difference between the Extreme Densities	According to the Comparison between the Contrasts of the Negative and the Contrasts of the Subject
Very slight: *Thin*	Slight: *Flat*	Contrasts reduced: *Soft*
	Medium: *Medium contrast*	Contrasts the same: *Normal contrast*
Great: *Dense*	Great: *Vigorous*	Contrasts increased: *Hard*[2]

It is essential to realize that the gradation of the image is determined solely by the difference

[1] A fully exposed or over-exposed negative often shows a faint positive image when examined by reflected light on the back at a somewhat oblique angle, the negative being held over a black background. Under the same conditions a slightly exposed or under-exposed negative examined on the emulsion side sometimes appears as a positive. A negative which has had a medium exposure may thus appear as a positive on one or other of its sides, but there is nothing regular about these features.

[2] The term *hard* is also applied to a negative without detail either in the shadows or in the high-lights owing to insufficient exposure and over-development.

between the extreme densities. The density of the shadows determines only the time of the exposure necessary to obtain a print. For instance, it is possible to superpose on a weak negative a piece of neutral grey smoked glass or another negative which has been uniformly fogged. The time necessary to get a print may be ten times as long, but once the equivalent printing times have been ascertained, the results will be identical with or without this supplementary uniform density. Indeed, two identical negatives, one left uncovered and the other covered with a neutral grey coating allowing one-tenth of the light to pass, will appear identical if the first is illuminated by a lamp of 10 candle-power and the second by one of 100 candle-power at the same distance.[1]

378. A negative is not an end in itself,[2] but only a means to an end, viz. the photographic print. A negative must therefore not be judged by itself, but only according to the prints which it can give by proper printing on a sensitive paper of suitable character.

To say of a negative that it has been correctly developed relatively to a given method of positive printing is the same as saying that its development was stopped at the moment when the difference between its extreme densities was that suited to the selected method of printing.

A print made from a negative which has been insufficiently developed cannot have both whites and blacks at the same time. The general appearance of the print is grey; its contrasts are insufficient.

On the other hand, a print from an over-developed negative easily gives whites and blacks, but some of the details visible in the negative are merged in the whites or in the blacks. The image shows a complete scale of greys, but with exaggerated contrasts.

The rock on which the beginner usually comes to grief is his ignorance of the characters that a negative should possess in order to yield good prints by the usual printing processes. The rational apprenticeship of the photographer should, in our opinion, begin by printing from negatives of suitable quality. For instance, two negatives may be used, one suitable for print-out paper or rapid bromide paper of weak contrast, and the other for a paper of very great contrasts, which negatives must, of course, be supplied with advice as to their correct use. Having acquired experience in printing, the beginner will be in a position to judge what results to expect from his negatives, whereas for lack of a guide, it is usually impossible for him to distinguish between faults in the negative and errors in printing.

379. **Exhaustion and Maintenance of the Developer.** When a developer has been in continuous service a certain portion of it is carried away with the plates and films removed for rinsing;[1] its content of active products decreases, and it becomes gradually loaded with soluble bromide and with the oxidation products of the developer. Also, when the emulsion is wetted before development, the developing solution is diluted by the water conveyed to it by the plates and films to be developed.

The oxidation products of the developer usually limit the use of old baths long before they are exhausted, so that it is advisable, from the point of view of economy, to avoid employing too concentrated developing solutions. For development with continuous machines, in which the duration of each treatment is limited, it is best to choose a developer (or mixture of developers) only slightly sensitive to the action of bromides, and to avoid caustic alkalis, with which exhaustion of the bath is always more rapid.

Generally, a certain portion of old bath is replaced by fresh solution after developing a certain area of plates or films.[2] The strengthening bath should not contain bromide, as the latter is present in more than abundant quantity in the used bath. In all cases where a bath has to be used to exhaustion, the partial change of carbonate into bicarbonate in the old bath is compensated by replacing a small portion of the carbonate in the strengthening bath by a

[1] The Autochrome plate for direct colour photography comprises a polychrome mosaic screen which in its entirety is about equivalent to a neutral grey of opacity $\frac{1}{15}$th, and it is known that with properly-adjusted lighting the images on the Autochrome plates appear very bright. The gleaming whites which are thus seen would be termed black by an inexperienced observer looking at the plate held in the hand.

[2] We are not dealing here with special applications such as photogrammetry, astronomy, spectroscopy, etc.

[1] After blotting off, the volume carried away is, on an average, 1·5 c.c. per square decimetre (approximately 25 min. per 12 sq. in.) of gelatine surface (or double that quantity in the case of film with a coating of gelatine on the back).

[2] The old bath thus removed may sometimes be used for other purposes where a bath containing bromide is suitable, such as the development of line negatives, transparencies, etc. It is evident that the tanks must be emptied periodically to clear out the sludge and to clean the inside surfaces.

chemically equivalent quantity of the corresponding caustic alkali.

Finally, in metol-hydroquinone developers, in which the content in metol is much smaller than that of hydroquinone, the oxidation is about the same for both these developing agents, so that more metol is destroyed relatively to hydroquinone. For this reason, the strengthening developer should contain a greater amount of metol.

380. Developer Stains on Hands and Clothes. As a rule, rinsing the hands in clean water before and after each contact with the developer suffices to prevent stains. Stains on clothes are best prevented by wearing a blouse, or apron, or an overall.

Developer stains on the hands[1] can generally be removed as follows: Scrub the hands with a little solution of potassium permanganate, about 1 per cent strength, acidified by adding a drop of sulphuric acid. The skin and nails will be stained a dark brown. After a few moments, rinse with clean water and then remove the colouration by means of a very small amount of a fairly strong solution of sodium bisulphite (the commercial solution diluted with an equal quantity of water) or solution of potassium metabisulphite.

The same process may be used with white linen. With coloured fabrics there is a risk that this treatment may, by bleaching the fabric, cause a spot more apparent than the one it aims to remove; it is well to make a test on a hidden edge to ascertain if the dye will resist these reagents.

(*f*) Various Methods of Development

381. Formulae for Developers. Some photographers spend most of their time testing successively all the developing formulae that they see, even when they show but negligible differences from other formulae previously tried (differences of the same order as those resulting from the uncertainty regarding the actual content in active substances in the products used). They attribute the success of other workers to the possession of some ideal formula, kept jealously secret, and making good all the failings of the photographer.

Except for some very special purposes, which require the use of developing baths of a composition considerably different from those of the usual type, any good formula is as suitable as another, and the best are generally not the most complicated. The choice between various current formulae should be made more on account of cost than for technical reasons. It has often been said that the best developer is the one with which the photographer is familiar, and it is not by abandoning one formula for another at the moment that its use is becoming familiar that the best results can be hoped for.

Some ridiculous formulae have been published owing to mistakes in converting foreign weights and measures or to typographical errors. Chance coincidences have led some practical workers, with little experience of experimental methods, to recommend the addition of products which are completely useless. Putting such exceptions aside, success depends more on the judicious conduct of the operations than on the choice of a particular formula.

In the following paragraphs one or more developing formulae will be given as exemplars of the methods of development described. They are not claimed to be better than others, but they are as good as others and respond perfectly to any reasonable demand that may be made.

382. Rapid or Slow Development. Development of almost lightning rapidity is certainly not at all advisable, for it can involve only the upper layers of the emulsion and can usually give only flat negatives[1] with numerous local blemishes. Also a solution which develops very rapidly must necessarily be a very concentrated one, in which the energy is pushed to the extreme limit by a large content of alkali, and such a developer is very costly and keeps badly. As a rule the strength of a developing solution is arranged so that development does not last much less than five minutes.

When a large number of plates or films have to be developed in a fairly short time, the development of several negatives at the same time becomes almost indispensable. It would

[1] If it is not desired to wear rubber gloves or finger-stalls, the solutions can be prevented from penetrating the skin by rubbing the hands energetically with a very little lanoline, the excess of which is wiped dry to avoid spots due to greasy fingers; both sides of the nails can be varnished with a colourless celluloid varnish.

[1] The films used intermediately in television are sometimes developed for only 15 seconds in a very energetic tepid developer, but the image obtained is extremely feeble and must be intensified by electro-optical means that have no photographic equivalent. When such films have to be used subsequently for producing copies, it is necessary, after scanning them by an infra-red beam, to continue development until a reasonable gamma is reached. In the most favourable conditions the minimum duration is about 60 seconds in a dish or tank, and 30 seconds in a continuous machine.

be very inconvenient to arrange side by side the requisite number of dishes, and, moreover, with a development time of about five minutes, it would be difficult to watch the development of several negatives effectively. Development in a vertical tank is then resorted to. Both because of the large capacity of such tanks (where the use of a concentrated solution would be very expensive), and in order to have time to inspect the negatives, the developer is used diluted in such a manner that development lasts from 10 to 30 minutes.

From the point of view of the quality of the images, it is absolutely immaterial whether the negative is developed in five or in 30 minutes.

Under the fallacious pretext of correcting errors in exposure, there has been recommended from time to time the systematic use of very dilute solutions with which development may last one or two hours. A bath in which development requires much more than 30 minutes has no advantage and has quite a number of disadvantages: exaggeration of chemical fog, streaks due to exhausted products, and excessive swelling of the gelatine, which considerably increases its tenderness.

383. Methods of Developments. The professional photographer and the advanced amateur, working large or medium sizes on plates or cut film, and seeking above all the best possible quality in each of their negatives, can utilize methods correcting, as far as possible, errors in exposure, or permitting the character of the image to be modified to a certain extent. Such methods are obviously not applicable either by the amateur beginner whose procedure is likely to be at fault, or by the user of a miniature size who cannot see any detail in the negative during development,[1] or by the photographer using a panchromatic emulsion that has not been desensitized, or finally by the D. and P. worker, who is compelled to work to delivery times that are ridiculously cut down and are, by the way, very detrimental to the quality of the work, so that he cannot examine the images during development or even sort out and treat separately films of different brands for which the optimum duration of development is not always the same.

The user of miniature sizes is not only restricted in the choice of methods of development, but also in the choice of formulae. Some developers in given conditions produce, as a matter of fact, images in which the grain is less visible than that of negatives developed in more energetic and more rapid developers, and they are therefore better suited for the considerable degree of enlargement necessary.

384. Automatic Development. Numerous formulae have been published giving a fixed time of development, or a series of times each corresponding with a certain temperature,[1] and applicable either to one brand of plates or films,[2] or to all brands without distinction.

The best of these methods fail to take into account the extreme range of luminosities of the subject, or the variation in the speed of development of various batches of a given type of emulsion,[3] or, finally, the inevitable variations in the composition of the developer. They cannot therefore produce negatives of the same contrast, all indiscriminately suited for the same method of positive printing. But all negatives thus produced will furnish satisfactory prints if the exposure of the plate or film has been ascertained with an exposure meter (§§ 324–325), and if a suitable method of printing is chosen for each negative.

By way of example we give here the formula recommended by the Kodak Co. for the development of its films (roll film and film pack), with

[1] The professional cinematographer is, from this point of view, better provided for, because he can, except for topical shots, take for each scene an extra length of film which can then be cut into pieces, each of a few frames; each piece can be developed for a different duration, and when finished can enable the duration most favourable to the emulsion, subject and taking conditions to be chosen.

[1] One of the best planned of these methods was that of Watkins, called "Thermo-development." In this a table showed for each current brand of plates or films the dilution at which various specified developing solutions must be used in order that, at one and the same temperature, the average times of development should be equal. A thermometer graduated directly in times of development gave the equivalent times for all temperatures.

[2] The Wratten panchromatic plates, were supplied with a table specially worked out for each batch of emulsion, and showing for that emulsion the times of development which at various temperatures would lead to three specified gammas or development factors (0·80; 1; 1·25) with the developer recommended. Such a method of automatic development is evidently above criticism, and the results obtained, at a time when the development of panchromatic plates could be done only in complete darkness, have perfectly justified this method.

[3] If, for instance, for a large number of emulsions of the same brand, the average is taken of the times of development corresponding to a gamma of 1, the resultant gamma will probably be always between 0·7 and 1·3.

the times of development corresponding with the various temperatures. (This developer must be compounded only at the time of use)—

Soda sulphite, anhydrous . .	40 gr. (4·5 grm.)
Soda carbonate, anhydrous. .	40 gr. (4·5 grm.)
Pyro	15 gr. (1·75 grm.)
Water, to make . . .	20 oz. (1,000 c.c.)

Temperature (in ° C.) .	20	18	16	14	12	10
,, (in ° F.) .	68	64·4	60·8	57·2	53·6	50
Time of development (in minutes) . . .	17	20	24	28	32	36

Owing to the extreme dilution of this developer, it must be considered as completely exhausted after using once.

This method of development can be applied, after preliminary trials, to almost all the developers specified in the paragraphs below.

385. Fine Grain Developers. While the graininess of a negative depends much more on the character of the emulsion than on the composition of the developer, so-called fine grain developers do, however, possess several notable advantages in all cases where it has been possible to give an ample exposure,[1] the best of these developers requiring double the exposure that could be given if a more energetic developer were used.

It is evidently always possible to obtain a fine grain image by stopping development at a time when the largest grains, which are the most rapid, are still only partially reduced, compensating by appropriate printing the lack of contrast in such negatives, but it is found that to obtain in this manner a fully detailed negative, it is necessary to increase the exposure. The only developers that can be regarded as fine grain developers are those which for a given gamma value develop weak light impressions and, therefore, do not require an excessive over-exposure.

To obtain in areas of equal density, developed to the same gamma, a graininess less than that given by usual developers, it is necessary to restrict the expansion of the silver outside the limits of the initial grain and to diminish the risk of a joining up of adjacent grains. To do this, the swelling of the gelatine must be reduced to a minimum by decreasing the alkalinity of the developer, and increasing in it the total concentration in salts (doses of sulphite near to saturation). This weak alkalinity usually imposes the use of developers with a high reduction potential. The effect is completed by superficial dissolution of the silver halide of each grain, either by means of sodium sulphite in high concentration, or by the addition of other solvents in small doses (ammoniacal salts, hyposulphite, etc.); these solvents, however, produce a useful effect only if development is fairly slow.

Most of these developers distort the density curve by retarding, from the start, the development of the high lights[1]; owing to their weak alkalinity they are, in fact, very sensitive to the influence of the soluble bromide formed in the layer of emulsion, but act energetically on the image of the shadows when the developer has a high reduction potential. Paraphenylenediamine (A. and L. Lumière and A. Seyewetz, 1904) or orthophenylenediamine developers constitute a very special case. These developers, which have little energy, are very active solvents of silver halide. In the absence of other developer, and being rendered only weakly alkaline, they require considerable over-exposure, and do not permit of sufficient gamma being obtained, but they can be accelerated by adding other developers, and then form the most efficient of the fine grain developers.

The table on page 260 gives some formulae of fine grain developers. Most of them are fairly quickly exhausted and can, therefore, be used advantageously only for developing a small number of negatives (about 7 sq. in. per fl. oz.). In these developers with a large content of sulphite a desensitizer would coagulate immediately; desensitization is therefore possible only by means of a preliminary bath.

386. Semi-automatic Method based on the Time of Appearance of the First Details of the Image. (Watkins factorial system.) Development for a total time, calculated by multiplying the time of appearance of the first details of the image (excepting the sky in landscapes) by the Watkins "factor" of the developing solution used (§ 344), if, as expressly assumed by the inventor of this method, it is applied only to correctly exposed negatives, has the advantage

[1] The question of fine grain development has been the subject of numerous controversies and of important studies among which we mention particularly those of V. B. Sease (1933), E. Stenger and E. Mutter (1933, 1935), G. Schwarz (1934, 1935), O. Bloch (1936).

[1] Hence the name of *compensating developers* sometimes applied to them.

Constituents	D76 Kodak[1] J. G. Capstaff 1927	Andresen and Veldmann 1928	Micros Lumière[2] A. Seyewetz 1933	V. B. Sease[3]	Lumicros[4] A. Seyewetz 1936
Water, to make	10 oz. (1,000 c.c.)	10 oz. (1,000 c.c.)	10 oz. (1,000 c.c.)	10 oz. (1,000 c.c.)	10 oz. (1,000 c.c.)
Metol	9 gr. (2 grm.)	65 gr. (15 grm.)	22 gr. (5 grm.)	—	44 gr. (10 grm.)
Soda sulphite, anhydrous	1 oz. (100 grm.)	$\frac{3}{4}$ oz. (75 grm.)	262 gr. (60 grm.)	393 gr. (90 grm.)	262 gr. (60 grm.)
Hydroquinone	22 gr. (5 grm.)	—	—	—	7 gr. (1·5 grm.)
Glycin	—	—	—	26 gr. (6 grm.)	—
Paraphenylenediamine (base)	—	—	44 gr. (10 grm.)	44 gr. (10 grm.)	—
Orthophenylenediamine (base)	—	—	—	—	22 gr. (5 grm.)
Borax	9 gr. (2 grm.)	—	—	—	—
Trisodic phosphate	—	—	17 gr. (3·5 grm.)	—	22 gr. (5 grm.)
Potassium bromide	—	0·9 gr. (0·2 grm.)	$4\frac{1}{2}$ gr. (1 grm.)	—	3 gr. (0·7 grm.)

of taking into account automatically all variations but the range of luminosities of the subject, all the negatives being thus developed to the same development factor or gamma. But as it is possible to choose a Watkins "factor" (ascertained experimentally) for each value of the development factor, it is easy to class the usual subjects into various groups according to their contrasts, and to use for each group a Watkins "factor" which will produce negatives best suited for the method of printing in view.

[1] In this developer, which is largely used in cinematographic work, the amount of borax almost neutralizes the sulphuric acid combined with the free base of the metol. It would seem that the omission of the hydroquinone only modifies its properties very slightly. This developer is not among the most efficient as regards fine grain, but it does not demand an increase in exposure. To prepare this bath, first dissolve the metol in water at about 131° F. Dissolve separately one-quarter of the sulphite and the hydroquinone in water at about 167° F., and pour this solution into the former. Finally dissolve the rest of the sulphite and the borax, add to the preceding mixture, and make up to 10 oz. (1,000 c.c.).

[2] Develop for about 7 min. at 65° F.

[3] This developer appears to be one of the most efficient for reducing grain (O. Bloch, 1936). With a development time of from 15 to 30 min., according to the emulsion, the exposure must be about doubled.

[4] A development time of 13 min. at 65° F. must not be exceeded.

For example, with the developer given below (*British Journal Almanac* formula, due to Welborne Piper, and one of the best formulae known for pyro, both from the point of view of the keeping quality of the stock solutions and from that of absence of any stain on the negatives), any "factor" between 10 and 14 will usually give satisfactory negatives. The lower "factor" should be chosen for very contrasty subjects and the higher one for subjects with little contrast.

(A)	Pyro	1 oz. (50 grm.)
	Soda sulphite cryst.	8 oz. (400 grm.)
	or anhydrous	4 oz. (200 grm.)
	Potassium metabisulphite	1 oz. (50 grm.)
	Water	60 oz. (3,000 c.c.)
(B)	Soda carbonate, cryst.	12 oz. (600 grm.)
	or anhydrous	$4\frac{1}{2}$ oz. (225 grm.)
	Water	60 oz. (3,000 c.c.)

At the time of use, mix (A) 1 part, (B) 1 part water 2 parts.

In the case of all other developers, the average Watkins "factors" given in § 344 for various developers may be used, at least as an approximate guide.

387. Rational Automatic Development. The sure use of automatic development is possible only if the correct time of development has

been experimentally ascertained with plates or films of the same batch of emulsion which is to be used (C. E. K. Mees, 1911). On this principle, B. T. J Glover (1921) has worked out a rational method of automatic development, for a detailed description of which we refer the reader to his booklet, *Perfect Negatives*, and of which we here confine ourselves to the main outlines—

Lay in a stock of plates or films of the various sizes required for a consumption of at least three months. This stock must be purchased on one order, with the express stipulation that the whole supply must come from one batch of emulsion.

Having chosen a developer (two of the suggested formulae are given below) of which a given portion is used once only, and having divided all subjects into three classes according to their range of luminosities (§ 15), the following test is made: Any common subject with medium contrasts (such as a house illuminated sideways, half in sunshine and with a foregoumd object one side of which is in shadow) is photographed three time', the exposure given to each plate be ng double that calculated by an actinometer (§ 324). It is with this same subject (and if possible at the same time of day) that the tests should be repeated with each new batch of emulsion.

In order to ascertain the normal time of development (defined by Dr. Glover as the time of development which, with a subject of this class, gives a negative suitable for contact printing on print-out paper or on normal rapid bromide paper), the three negatives are developed in the chosen developer at the fixed temperature of 65° F. for times respectively equal to the average length of the normal duration of development (for that particular developer), as well as for six-tenths and for sixteen-tenths of this time (for instance, 3, 5, 8 minutes for the metol-hydroquinone developer, the average time for which is 5 minutes). After finishing these three negatives, they are printed on the chosen paper with every care to obtain the best result. Then the normal duration of development will be the time of development used for the negative that gives the best print. It may happen that none of the three prints is perfect. In this case, the normal time of development may be intermediate between two of the times tested, or it may be outside their range. In the former case it suffices to take an average time; in the latter, a new set of development time tests becomes necessary.

Once the normal time is known, under the experimental conditions, the times of development of the same emulsion, but for other printing methods, can be obtained from the table[1] shown on page 262 by the aid of factors mentioned in the table by which the normal time of development should be multiplied according to circumstances. For rapid development (average time 5 min. at 65° F.) Dr. Glover recommends—

Metol-hydroquinone—

Metol	11 gr. (1·25 grm.)
Soda sulphite, anhydrous[2] .	1½ oz. (75 grm.)
Hydroquinone . . .	33 gr. (3·75 grm.)
Soda carbonate, anhydrous	½ oz. (25 grm.)
Potassium bromide (10% solution)	2½ drm. (15 c.c.)
Water, to make . .	20 oz. (1,000 c.c.)

For tank development (average time 30 min. at 65° F.) the slow glycin developer is used.

Glycin Developer—

Soda sulphite, anhydrous	130 gr. (15 grm.)
Glycin . . .	90 gr. (10 grm.)
Potassium carbonate, dry	400 gr. (45 grm.)
Water, to make .	20 oz. (1,000 c.c.)

At the time of use mix 1 part of this stock with 5 parts water.

388. Development by Visual Inspection of the Image. The semi-automatic and automatic methods of development which have been described (§ 384 and § 385) cannot be used satisfactorily by the cinematographer, who receives for development films of subjects very varied in character taken on films of various batches and various makes, nor by the technical photographer, who, of necessity, has to use

[1] In making this table, Dr. Glover has considered the following data as best representing ordinary practical conditions: *Gamma infinity* (maximum contrast) is 2·5; range of contrast for the various types of subject 1 : 60, 1 : 25, 1 : 10; range of exposures giving respectively the weakest grey and the maximum black, 1 : 10 for papers of great contrast; 1 : 20 for soft gaslight papers; 1 : 50 for bromide papers and print-out papers; 1 : 80 for carbon and platinum papers. Finally, he has taken the average value of 1·6 for Callier's factor expressing the approximate relation of the densities of a given part of the negative measured respectively in parallel light and in diffused light.

[2] In preparing any metol developer the major portion of the soda sulphite must not be added until the metol has been dissolved (§ 360), but at the beginning it is advisable to dissolve some pinches of sulphite (about one-fifth of the total quantity) in order to avoid the too rapid oxidation of the metol, which might occur in tepid or hot pure water.

RELATIVE TIMES OF DEVELOPMENT AT 65° F.

Subject	Contact Printing or Daylight Enlargement Without a Condenser				Enlargement by Artificial Light focussed by a Condenser	
	Papers of Very Great Contrast (for hard results)	Soft or Normal Gaslight Paper	Normal Bromide Paper, Lantern Plates, P.O.P., Self-toning	Carbon and Platinum Papers	Soft or Normal Gaslight Papers	Rapid Bromide Papers
Weak contrast . .	3/4	1	1·6	2·2	1/2	4/5
Medium contrast . .	1/2	3/4	1	1·25	3/8	1/2
High contrast . .	2/5	3/5	3/4	1	3/10	3/8

This table is for use in conjunction with the developers given on the preceding page; it may be unsuitable with other developers.

emulsions of different types, nor by the amateur purchasing his supplies day by day and making no note of the character of the emulsions used or of the character of the subject. All these photographers must base their judgment of the point at which to stop development (at the moment considered to be right) on the appearance of the image.

In these circumstances, often the only method of supervising development is the estimation of the degree of contrast in the negative when it is examined by transmitted light. Development is usually done in a bath of constant composition, a condition which, moreover, is imposed by considerations of economy when development involves large quantities of developing solution which have to be used to exhaustion. This would not be feasible if the bath during use were modified as regards its content of active substances. The most that can be done with this inspection method, when a plate or film comes up very unsatisfactorily, is to attempt to save it by placing it in a dish of clean water to stop development, then employing one of the special methods of development which are described later (§ 387 to § 389).

As already stated (§ 374), the judgment of the moment when the difference between the extreme densities of the negative reaches a favourable point demands a very long experience, and even then leads sometimes to mistakes, at least if one is limited to one given method of printing.

Unless otherwise stated, the developing formulae usually published apply to this method of development by inspection.

In addition to the various formulae already given for automatic development, and perfectly adapted to the present case, a selection of other formulae are given here—

Maximum-energy Metol-hydroquinone Developer for Under-exposures (J. I. Crabtree, 1921) to be used undiluted; normal duration of development 4 to 5 min. at 65° F. This developer will keep only for a few days, unless stored in bottles full to the neck and corked air-tight—

Metol . . .	140 gr. (16 grm.)
Soda sulphite, anhydrous[1]	525 gr. (60 grm.)
Hydroquinone . .	140 gr. (16 grm.)
Caustic soda . .	90 gr. (10 grm.)
Potassium bromide .	90 gr. (10 grm.)
Denatured alcohol .	1 oz. (50 c.c.)
Water, tepid, to make	20 oz. (1,000 c.c.)

Concentrated Paraminophenol Developer of the Rodinal Type (J. Desalme, 1913). Dissolve $\frac{3}{4}$ oz. (75 grm.) of paraminophenol hydrochloride in 6 to 7 oz. (600 to 700 c.c.) of hot water,[2] and filter if necessary.

Add to this solution 45 gr. (10 grm.) of sodium sulphite and 150 gr. (35 grm.) of dry sodium

[1] Dissolve a pinch of the sulphite before dissolving the metol.

[2] If the solution is coloured, boil it for a few minutes with *washed* animal charcoal, 45 grs. (10 grm.).

carbonate, previously dissolved in 2 oz. (fluid) (200 c.c.) of tepid water. This produces a precipitate of the free base, which is filtered on a cloth after cooling. The paste is drained so that it does not occupy a bulk of more than 3 oz. (300 c.c.), and to it is added 1 oz. (100 c.c.) of liquid sodium bisulphite of density 35° Bé., and then, little by little, soda lye of density 40° Bé. until the precipitate has completely dissolved. Then a very small quantity of the bisulphite is again added to obtain a persisting precipitate. Add water to bring up the total to 5 oz. (fluid) (500 c.c.). Filter, and divide into a number of small, hermetically-sealed bottles. For use, this concentrated developer is diluted with 20 to 30 times its volume of water.

Paraphenylenediamine Developer (J. Desalme, 1911)—

Paraphenylenediamine (free base)	90 gr. (10 grm.)
Liquid sodium bisulphite 35° Bé.	½ oz. (fluid) (25 c.c.)
Soda lye 40° Bé.	6½ drm. (40 c.c.)
Potassium bromide	25 gr. (3 grm.)
Water, to make	20 oz. (1,000 c.c.)

This developer oxidizes only slowly. Its keeping quality is enhanced by keeping the caustic soda separately dissolved in half the total amount of water. The developer is then prepared at the moment of use by mixing equal parts of the two stock solutions.

Acid Amidol (Diaminophenol) Developer for Over-exposed Negatives (G. Balagny, 1912). Depth development (§ 361) is perfectly suited for very over-exposed negatives and for those of subjects with violent contrasts when it is wished to reduce these contrasts.[1] In this developer the image appears in about 10 to 15 minutes, the total time of development being usually not less than 2 hours, and lasting sometimes 12 hours. Development can, however, be conducted in a dish, as there is no deposit from this developer—

Amidol (diaminophenol hydrochloride)	90 gr. (10 grm.)
Sodium bisulphite lye 35° Bé.	4¾ drm. (30 c.c.)
Soda sulphite, anhydrous	50–70 gr. (6–8 grm.)
Water, to make	20 oz. (1,000 c.c.)

Developers Producing Negatives of Maximum Contrast. For obtaining the maximum of contrast, especially in the copying of drawings, printed matter, or manuscripts with black writing on white paper, it is usual to employ a hydroquinone and caustic alkali developer containing a very large quantity of bromide. Such a developer can be obtained by mixing, at the moment of use, equal volumes of the following solutions A and B.

(A)	Potassium metabisulphite	⅔ oz. (20 grm.)
	Hydroquinone	½ oz. (25 grm.)
	Potassium bromide	½ oz. (25 grm.)
	Cold water, to make	20 oz. (1,000 c.c.)
(B)	Caustic soda	1 oz. (50 grm.)
	Water, to make	20 oz. (1,000 c.c.)

This developer can be used once only; the average development time is 3 min. at 65° F.

It is often possible to obtain sufficient contrasts, though less considerable than with the above developer, by using the following solution, which is considerably cheaper, since it can be used repeatedly[1]—

Metol	9 gr. (1 grm.)
Soda sulphite, anhydrous[2]	1½ oz. (75 grm.)
Hydroquinone	80 gr. (9 grm.)
Potassium carbonate	½ oz. (25 grm.)
Potassium bromide	45 gr. (5 grm.)
Water, to make	20 oz. (1,000 c.c.)

Ultra-rapid Development. (H. Parker and J. I. Crabtree, 1936.) In photography and cinematography of topical events and for military intelligence work by aerial photography it is often necessary to cut down development time to a minimum (§ 382, footnote) without unduly sacrificing the quality of the images. This result is generally secured by using developers rendered alkaline by a caustic alkali, or made moderately warm.

In either tank or dish, development cannot be uniform unless it lasts at least 1 min.; on continuous machines this period may be reduced to 30 sec. in a case of absolute urgency.

Water, to make	10 oz. (1,000 c.c.)
Metol	61 gr. (14 grm.)
Soda sulphite, anhydrous	½ oz. (50 grm.)
Hydroquinone	61 gr. (14 grm.)
Caustic soda	83 gr. (19 grm.)
Potassium bromide	39 gr. (9 grm.)

The normal development time is about 2 min.

[1] The deep parts of a sensitive layer exposed to light by its free surface having received less light than the superficial ones, all processes dealing chiefly with the deep parts are not applicable to under-exposed images.

[1] For obtaining very great contrasts in the reproduction of line drawings, it has been suggested that a film be exposed through its back and developed in a tanning developer (pyrogallol or pyrocatechin) without sulphite. The undeveloped portions of the emulsion are laved away in tepid water, development is completed, and the gelatine is then impregnated with a black dye (E. Loening, 1933).

[2] First dissolve a pinch of sulphite, then dissolve the metol and then add the rest of the sulphite.

at 65° F.; it can be reduced to about 1 min. by using the developer at 86° F. (§ 391). To reduce these times by half on machines, the developer must have strong ammonia added to it at the rate of 12 mimims per ounce (25 c.c. per 1,000 c.c.).

389. Development in Several Successive Baths. This method, which is also called development in several dishes, usually employs two successive baths of different composition with, as extreme cases, the use of two baths of the same formula but at different stages of exhaustion, and the use of pure water as the second bath.

We will deal successively with its application to the correction of variations in exposure, and to its trade use, where it is sometimes adopted for reasons of cost.

Correction of Variations in Exposure. This method of development is perfectly suited for supervised development of a large number of negatives taken in unknown conditions. Development is then begun in a dilute or slow-acting bath, so as to retard the appearance of the image and to permit, after individual examination, of development being completed in a bath for under-exposed negatives, or in one for over-exposed negatives.

The different developers recommended by A. Hübl (1897) are prepared from the same stock solution (or, rather, from a species of clear paste which must be well shaken before taking any for use), prepared as follows—

Dissolve 1 oz. (25 grm.) of anhydrous soda sulphite in $2\frac{1}{2}$ oz. (70 c.c.) of hot water, and then $\frac{3}{4}$ oz. (20 grm.) of glycin; then add, in small quantities at a time (because of the effervescence which occurs in the mixture), $3\frac{1}{2}$ oz. (100 grm.) potassium carbonate. After the bubbling has ceased warm the mixture, if necessary, until all is dissolved, and then allow to cool. There should then be $5\frac{1}{4}$ oz. (150 c.c.) of a clear paste (if much less, from evaporation, make up the volume to this amount with water). Keep in a well-stoppered bottle.

In the trial bath, preferably cooled to 50° F., development should be complete in 60 to 90 minutes; with normally exposed negatives the image should appear in 15 to 30 minutes; in such cases the development may be finished in the same bath or in a more concentrated developer.[1]

[1] For the development of negatives for which the time of exposure has been approximately correct, the appropriate developer is made by diluting 5 parts of this paste to 100 parts by volume. Development should be complete in about 15 minutes.

	Trial Bath	*Over-exposed Negatives*	*Under-Exposed Negatives*
Water, to make	20 oz. (1,000 c.c.)	20 oz. (1,000 c.c.)	20 oz. (1,000 c.c.)
Concentrated developer	2 dr. (12 c.c.)	1 oz. $1\frac{1}{2}$ dr. (60 c.c.)	$4\frac{3}{4}$ dr. (30 c.c.)
Potassium bromide (10% solution)	20 min. (2 c.c.)	$6\frac{1}{2}$ dr. (40 c.c.)	—
Caustic soda (10% solution)	—	—	$3\frac{1}{4}$ dr. (20 c.c.)

If the image makes its appearance in less than 10 minutes, the negative has been considerably over-exposed and must be transferred to a developer containing a considerable amount of bromide; in this solution at a temperature of 50° F. development is complete in less than an hour.

If no trace of the image (except, perhaps, the sky) appears in 30 minutes, the negative has been under-exposed, and must be quickly placed in a bath accelerated by addition of a caustic alkali; the temperature of this bath should be about 77° F. and development is then complete in 10 or 15 minutes.

In cases where there is less uncertainty as regards the exposure, this method of working may be very much simplified by employing two developers only, both at room temperature.

Whilst the two developers for this purpose may be prepared from different substances, as a general rule the two baths are made up from the same developing agents but in different proportions; one of them (the *soft bath*) must be such as to give the best result with under-exposed negatives, whilst the other (the *hard bath*) will give the best results with over-exposed negatives.

The following formulae (A. Calvet, 1911) are well suited to this method of working—

	Soft Bath	*Hard Bath*
Soda sulphite, anhydrous	350 gr. (40 grm.)	130 gr. (15 grm.)
Amidol	18 gr. (2 grm.)	53 gr. (6 grm.)
Potassium bromide (10% solution)	50 min. (5 c.c.)	1 oz. $3\frac{1}{4}$ dr. (70 c.c.)
Water, to make	20 oz. (1,000 c.c.)	20 oz. (1,000 c.c.)

When it is noticed during development in a strong bath that the high-lights tend to acquire a considerable density, before the details of the shadows have acquired sufficient, the negative may be put into a dish of water; the dish is rocked two or three times and then left undisturbed (§ 341). It has been suggested (A. Knapp, 1933) to alternate immersions in the developer and immersions in plain water in order to obtain the best results from under-exposed negatives.

Industrial Applications of Two-bath Development. To use up as fully as possible the developers, which are the most expensive constituent of developing baths, the various components may be divided into two baths, the first containing the developers and a part of the sulphite, while the second contains the remainder of the sulphite, the alkali, and, possibly, the soluble bromide.

In the first bath the emulsion absorbs a quantity of liquid depending on the swelling of the gelatine, a swelling which, for a given emulsion and a given bath, has a limit fixed for each temperature. No development occurs in this bath, so that its composition remains unchanged if we disregard atmospheric oxidation, which is very slow in the absence of an alkali.[1] Placed, without intermediate rinsing, in the second bath, the emulsion develops, first rapidly and then more and more slowly, owing to the diffusion of the developer in the bath. Any variation in the times of immersion in the baths beyond the minimum times easily ascertained by trials, has therefore no appreciable effect on the value of gamma.[2] Owing to the limited amount of developer involved, the straight portion of the density curve tends to curve in its upper part.

The first bath should be kept at a constant level by addition of stock bath. The second bath, in which the waste products of development accumulate, must be replaced fairly often, or kept at a constant composition by pouring away a given portion of the total volume and replacing this with new bath.

Very interesting applications of this method have been made, especially in aerial photography and in cinematography (A. de Odencrants, 1922; L. Lobel, 1926; J. I. Crabtree, H. Parker and H. D. Russell, 1933).

Two-bath development can also be effected by means of two complete developing baths: the first bath acting as a stock for maintaining the second, this contribution being automatically proportional to the surface developed, or the first bath may have the same composition as the second, but as the plate only remains a short time in the first bath, this remains almost new. The short immersion in this new bath suffices, however, to avoid a decrease of gamma and speed, as would occur if development took place entirely in the used bath. When the second bath is exhausted it is replaced by the first, which in turn is replaced by a fresh solution (Crabtree, Parker, and Russell, 1933).

[1] In this case there is no preliminary wetting, which could only be disadvantageous.

[2] If the contrast is insufficient, it is obviously possible to replace the negative in the first bath, but all the economic advantages of this method would thereby be lost.

390. Tentative Development. This method of development is only practicable in the treatment of a small number of negatives; it is used chiefly with pyrogallol; as an example of its working, we shall take a case in which caustic soda is used as alkali (Drouet, 1898).

When ready to start work, the following bath is prepared—

Soda sulphite, anhydrous	25 to 30 gr.	(1·5 to 2 grm.)
Caustic soda[1] (10% solution)		2 to 3 drops
Pyrogallol[2]	8 to 9 gr.	(0·5 to 0·6 grm.)
Water, to make	3½ oz.	(100 c.c.)

If, after about 30 seconds' immersion in this bath the image has not appeared, pour the liquid into a measure and add two more drops of the caustic soda solution, mix, and pour the mixture again on to the plate or film; continue these additions if necessary until the high-lights are faintly visible. Once the high-lights are clearly indicated, one or two drops of the caustic soda solution may be added from time to time, and the quantity may be increased a little towards the end of development.

For over-exposed negatives add to the bath as soon as possible a few drops of a 10 per cent solution of potassium bromide. If the negative is known to be over-exposed it is best to do this before commencing to develop. The additions of caustic soda must be made less frequently, and towards the end the quantity of pyrogallol must be increased a little.

For under-exposed negatives, as soon as possible increase the amount of caustic soda solution up to about 10 drops. If the negative is known to be under-exposed (e.g. when a negative exposed under identical conditions has already been developed), it is better to omit the pyrogallol altogether at first, this being added 30 or 40 seconds after placing the plate or film in the alkali. Continue adding caustic soda during development.

391. Development in Tropical Climates. Various special precautions must be taken in hot climates. In the first place, development

[1] In order to use this solution conveniently, keep it in a glass dropping bottle, of which the ground neck is covered with paraffin wax to prevent the stopper from sticking.

[2] This amount corresponds very closely with the amount of resublimed (feathery) pyro held by a common wooden mustard spoon.

should not be deferred more than a few days, since the latent image sometimes suffers a gradual fading (regression) under the combined influence of high temperature and atmospheric *moisture*. Films are especially liable to this fading of the image. Next, the gelatine must be prevented from swelling excessively during the process; such swelling might lead to various troubles (melting, frilling, reticulation, etc.) Finally, sudden changes of temperature must be avoided with the swollen gelatine; these only increase the risk of accidents, and it is better to carry out the whole of the operations in baths at the surrounding temperature, even though it be high, than to use chilled baths for some parts of the process and warm water for others. In equatorial regions it is also advisable to carry out the work when the temperature is not so high, generally during the night.[1]

In order to prevent the swelling of the gelatine without preliminary hardening, addition is made to the developer (and to any baths such as desensitizers used before development) of 10 per cent to 20 per cent of soda sulphate (§ 356); or alcohol is substituted for a certain proportion of the water.

As the result of a systematic study[2] of a great number of developers used at various temperatures up to 95° F., J. I. Crabtree (1917) recommended the following developer—

Soda sulphite, anhydrous .	1 oz. (50 grm.)
Paraminophenol hydrochloride	60 gr. (7 grm.)
Soda carbonate, anhydrous .	1 oz. (50 grm.)
Soda sulphate, crystals .	2 to 4 oz. (100 to 200 grm.)
Water, to make . . .	20 oz. (1,000 c.c.)

The maximum quantity of soda sulphate is employed only if the developer is at a temperature of about 95° F.; at about 80° F. the minimum amount stated is quite enough. A slight reticulation should be produced only after 4 or 5 minutes' immersion in the developer, a time greatly in excess of the normal duration of development, in spite of the retardation due to the sulphate. Development takes twice as long with the lesser quantity of sulphate stated and three times with the larger quantity.

Although this developer has little tendency to give chemical fog, it may be necessary, especially at the higher temperatures, to add to it a small amount of potassium bromide, unless exposures are uniformly increased.

A slightly acidified amidol developer without any special addition may be used at temperatures up to 80° F. and more, by reason of the very slight swelling of gelatine in acid baths. This developer may be adapted to temperatures up to 95° F. by the addition of sulphate of soda, as follows (L. J. Bunel, 1924)—

Soda sulphite, anhydrous	260 gr. (30 grm.)
Potassium metabisulphite	90 gr. (10 grm.)
Amidol . . .	45 gr. (5 grm.)
Potassium bromide .	45 gr. (5 grm.)
Lactic acid (officinal) .	50 min. (5 c.c.)
Soda sulphate, cryst. .	2 oz. (100 grm.)
Water, to make .	20 oz. (1,000 c.c.)

At higher temperatures than 95° F., sulphate of soda, even in larger amounts, no longer serves to prevent excessive softening of the gelatine, and part of the water normally used for making up the developer must be replaced by alcohol.

Whatever the developer employed, rinse the developed negative very rapidly, and proceed either with temporary "fixing," according to § 375, or with fixing in a combined hardening and fixing bath (§ 403).[1]

392. Combined Developing and Fixing. It is possible to carry out in a single bath the development and fixing of a gelatino-bromide negative

[1] Alum hardening before or during development (addition of chrome alum to an amidol developer) often produces inequalities of development. It has been suggested that the sulphite content be reduced to about 13 gr. per 20 oz. (1·5 grm. per litre) in order to allow hardening of the gelatine by the oxidation products of the developer, but in this way only the gelatine in the image is tanned, and this action is also too slow when the gelatine has been able to swell already as is the case in hot climates.

[2] It is well to call the attention of experimenters to the fact that such methods as these, which in temperate and dry climates permit of the easy handling of plates and films up to 95° F., often fail when employed in hot and humid climates, producing reticulation at temperatures hardly greater than 80° F. This anomaly may perhaps be due to the considerable quantity of water vapour absorbed by the gelatine before development.

[1] Fixing baths containing alum are not very stable at comparatively high temperatures, and it is often better to harden the gelatine before fixing (Crabtree, 1924). For this purpose the negative is taken from the developer and rinsed for 2 or 3 seconds and is then immersed for 3 minutes in a 3 per cent solution of chrome alum or of ordinary alum (this bath may also contain about 10 per cent of soda sulphate). During this immersion the liquid in the bath must be constantly kept moving, at least for the first minute, for, if not, many troubles may occur (stains, frilling, etc.). During its use the bath gradually changes its colour from violet-blue to greenish-yellow; when the latter stage has been reached it must be replaced by a new bath.

plate or film (gelatino-bromide papers cannot be treated in this way without the formation of heavy fog). This fact was known to W. D. Richmond (1889). It is, however, only in recent years that it has been possible to obtain satisfactory results in this way, and even then only in certain cases. For one thing, many emulsions, in order to give passable results by this method, must be given considerable over-exposure, and, for another, fixing and development are not influenced to the same extent by variations in temperature, the process of fixing being retarded by cold and accelerated by heat more than is the case with development (C. E. K. Mees, 1921). This causes heavier development to occur in cold baths than in hot.

Improving on the methods due to C. Otsuki and T. Sudzuki (1914), and to L. J. Bunel (1921), A. and L. Lumière and A. Seyewetz (1924) recommended the following bath, in which development and fixing are completed in 15 to 20 minutes at a temperature between 60° F and 65° F. (About 2 oz. of the solution are required for a quarter-plate.)—

Soda sulphite, anhydrous	350 gr. (40 grm.)
Amidol . . .	45 gr. (5 grm.)
Soda phosphate, tribasic .	175 gr. (20 grm.)
Hypo	½ oz. (25 grm.)
Water, to make . .	20 oz. (1,000 c.c.)

When the solution has been once used it must be thrown away.

(*g*) Testing a Developer

393. Method for the Comparative Testing of Two Developers.[1] The procedure generally adopted by photographers to compare two developers consists in exposing two identical plates or films on the same subject with the same time of exposure ; one of these is developed in each developer and the images so obtained are then compared. This method is not very satisfactory because it is not possible to place side by side the parts of the two negatives which have received the same exposure; comparison is therefore difficult. The test is much more useful if it is carried out on a scale of uniform tones obtained by exposing a plate or film in successive bands to intensities which correspond respectively to the shadows, half-tones and high-lights of average subjects; after cutting this negative into several identical strips, each comprising a complete scale of tones, strips are developed for different times in each of the two developers. After fixing and washing, corresponding tones are placed side by side for comparison.

Take a plate or film (preferably 7 × 5 in.) or a piece of sensitized paper, place in a printing frame at such a distance (determined by a preliminary trial) from a weak source of light that after two seconds' exposure a normally developed emulsion just shows a trace of image when compared with a portion which has not been exposed at all. An opaque card held in front of the frame allows different times of exposure to be given to the various parts of the plate. At the start the card covers a band about half an inch wide and parallel to the longer side. This band will eventually be used for comparing the amount of chemical fog resulting from the various conditions of development. After two seconds' exposure, the card is pushed on about half an inch, and this is repeated after periods of 4, 8, 16, and 32 seconds, counting from the start of the first exposure.[1] When this has been done, cut the plate or film into a certain number of pieces. Fig. 171 shows such pieces after different times of development in a metol developer E and in a hydroquinone developer H, and exhibits the characters of the two developers. The image appears very quickly in the metol developer, whilst in the hydroquinone developer it appears very slowly, but the density then increases more quickly, so that the two negatives are almost identical after a sufficiently long time of development.

394. Applications of the Practical Test. The density of the area *A*, which has been protected from all light-action, gives the amount of fog produced by development. The density at *B*, slightly exposed, corresponds with the shadows of a subject and records in some measure the power of the developer to render details in the shadows, whilst the difference in density between *B* and *F* shows its power to yield contrast.

When a comparison is made, at the same temperature, of two developers prepared by the

[1] Paragraphs 393 and 394 are a résumé of an article by J. I. Crabtree, published in *Brit. J. Phot.* vol. 69 (1922) pp. 153, 170, 188.

[1] Where many such tests are to be made, a negative should be made once and for all by the same method, and should be developed without being cut up. The darkest band should then be covered with black paper, and the time of exposure adjusted so as to produce, on development, only a faint density under the darkest of the bands next to the one covered by the mask.

same formula but with two different samples of the same developing agent, the times of appearance of the image are inversely proportional to the respective contents of the active substance in the samples. This furnishes a simple test of the purity of such substances.

The same methods of working will serve to test the effect of bromide on a developer. This is done by measuring approximately the ratio of the times of exposure which, with and without bromide, give two tones which differ in density from the respective fog values by the same amount.

The resistance of a developer to oxidation may be determined by comparing two samples of the same solution maintained under the following conditions: One is kept in a full and well-stoppered bottle; the other is kept in an open dish with free access to the air, precautions being taken to keep up the volume of the latter sample in case of evaporation of water.

(*h*) Physical Development Before or After Fixing[1]

395. Physical Development before Fixing. Physical development, which consists in the deposition of nascent silver formed in the developer on the nuclei of the latent image, and which is the normal method employed for the development of the image in the wet-collodion process, is also applicable to gelatino-bromide emulsions. As a rule, however, the method has no advantages over ordinary chemical development. The precipitation of silver may be brought about in solutions which are alkaline, neutral or acid. One of the most commonly employed methods is that of Lüppo-Cramer, 1903, 1923).

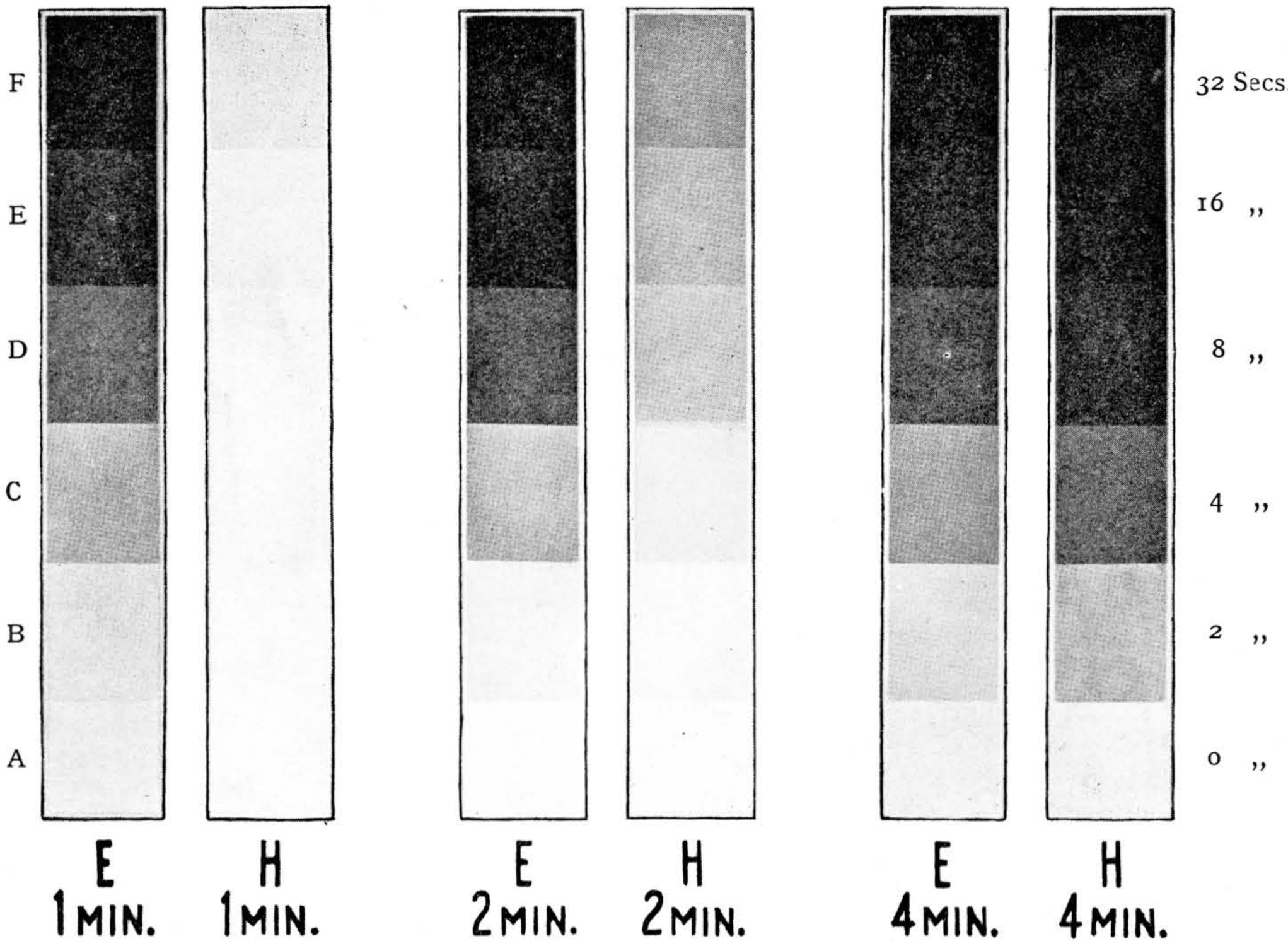

Fig. 171. Comparative Effects of Metol (E) and Hydroquinone (H) Developers

[1] These methods are not always applicable to ortho- or panchromatic emulsions, nor to ordinary emulsions after desensitization, because the dyes absorbed by the nuclei of the image sometimes prevent development (Lumière and Seyewetz, 1924).

The stock solution is prepared as follows—

Metol . .	130 to 175 gr.	(15 to 20 grm.)
Citric acid . .	2 oz.	(100 grm.)
Soda citrate . .	130 gr.	(15 grm.)
Water, to make .	20 oz.	(1,000 c.c.)

The formation of mildew in this solution may be prevented by the addition of a small quantity of phenol. When required for use, take $3\frac{1}{2}$ oz. (100 c.c.) of this solution and add from 50 to 170 minims (3 to 10 c.c.) of a 10 per cent solution of silver nitrate. Development is very slow. As soon as the developer becomes turbid it must be replaced by a fresh lot.

Plates of recent manufacture must be used and the exposures given must be large.[1] One condition of success is that all dishes employed must be quite clean; it is best to use a glass dish which has been very carefully cleaned.

It has been proposed (A. Schmidt, 1896) that when a plate has been found to be over-exposed chemical development should be stopped at once by washing in water, the plate being then treated by a physical developer.

Since physical development affects only the surface layers of an emulsion, C. E. K. Mees (1909) has proposed development by this method for fine-grained emulsions, coated in specially thin layers, for the purpose of increasing their resolving power. At present physical development of this kind is merely of theoretical interest.

396. Physical Development after Fixing. The fact that the latent image may be developed by deposition of silver or mercury after the sensitive silver salt has been dissolved by a fixing bath was pointed out in 1858 by Young in the case of collodion plates and in 1894 by Kogelmann, in the case of gelatino-bromide plates. This method has scarcely any practical value, but is of some experimental interest, for which reason the recently improved methods of A. and L. Lumière and A. Seyewetz (1924) may be mentioned.

Ample exposures must be given and these must be proportionally greater if the most sensitive emulsions are used. The plate must be fixed in an alkaline bath, e.g. one in which 100 minims (10 c.c.) of ammonia (22° Bé.) are added to 20 oz. (1,000 c.c.) of 30 per cent hypo. It must not be kept in the fixing bath more than 5 minutes, and must then be washed in several changes of water made alkaline by the addition of ammonia. As soon as fixing is complete all further operations may be carried out in full light.

The developers which appear to be most convenient are prepared from two stock solutions—

		Silver	*Mercury*
(A)	Soda sulphite, anhydrous . .	1,580 gr. (180 grm.)	1,580 gr. (180 grm.)
	Silver nitrate (10% solution) .	$1\frac{1}{2}$ oz. (75 c.c.)	—
	Mercuric bromide . . .	—	80 gr. (9 grm.)
	Water, to make . . .	20 oz. (1,000 c.c.)	20 oz. (1,000 c.c.)
(B)	Soda sulphite, anhydrous . .	175 gr. (20 grm.)	175 gr. (20 grm.)
	Paraphenylenediamine (base) .	175 gr. (20 grm.)	—
	Metol	—	175 gr. (20 grm.)
	Water, to make . . .	20 oz. (1,000 c.c.)	20 oz. (1,000 c.c.)

For use, mix 5 volumes of (A) with 1 volume of (B).

Development must be carried out in a glass dish which has been very thoroughly cleaned, otherwise the greater part of the metal will be deposited on the sides of the dish instead of on the image.

The image appears very slowly and its density only attains a value sufficient for printing after several hours. The bath itself, however, is almost completely used up in about an hour, and must be renewed hourly. The image, clear grey by reflection, is slightly violet by transmitted light, even after very prolonged development. After intensification, an image is obtained of density suitable for printing, even if development has been allowed to continue only for about half an hour. Under the microscope the image resulting from prolonged development by silver (48 hours) is seen to consist of sharply defined hexagonal grains, indicating that a *crystallization* of silver round the nuclei of the latent image has occurred.

The characteristic curves of negatives treated by these methods have the same form as those corresponding with chemical development, but by sufficiently prolonging development it is possible to obtain much higher gamma values (M. Hanot and W. Guillemet, 1928).

[1] The iodizing of the emulsion before its development (§ 330, footnote) enables normally exposed negatives to be submitted to physical development (A. F. Odell, 1933); the developer recommended, which acts slowly (requiring about 2 hours) contains silver nitrate, sulphite, hyposulphite of soda, and diaminophenol hydrochloride.

CHAPTER XXIX

FIXATION

397. The Purpose of Fixation. Fixing and washing are necessary in order, firstly, to convert the salts of silver remaining in the image, after its development, into soluble substances, and, secondly, to remove them.[1] Contrary to common opinion, the former of these processes is by far the more important; washing, no matter how prolonged, can only remove soluble substances, and is not effective if the previous process of solution has not been carried to completion by fixing.

398. Solvents of the Silver Halides. It must be said at the outset that there are no true *solvents* of the chloride, bromide, or iodide of silver. When sugar is dissolved in water and the latter is evaporated, spontaneously or by boiling, the sugar is recovered in its original condition; this is really a case of true *solution*. If silver bromide be submitted to the action of one of the saline solutions which are generally considered as its solvents, the evaporation of the liquid so obtained will never leave behind silver bromide; the residue will consist of transformation products of this salt, due to the chemical interaction of the silver salt and the fixing salt. This is not a purely academic distinction; we shall see later that it is of great practical importance.

The first practical fixer to be used was hyposulphite of soda, employed for this purpose by Herschel (son of the astronomer) in 1839. Hyposulphite of soda, though it deals effectively with the chloride and bromide of silver, is only a very mediocre fixing agent for photographic coatings containing mainly iodide of silver. It was abandoned on the introduction of the wet collodion process, in which fixing was done by a solution of cyanide of potassium.[2] Hyposulphite returned to favour when the gelatino-bromide plate replaced, except for certain special applications, the collodion processes. It may be considered as being practically the only fixer in common use.

The various other substances capable of converting the halides of silver into soluble substances are considerably more difficult to use. The solutions so obtained are not very stable and are precipitated on dilution, and do not permit of final removal by washing. This is notably the case with ammonia (ineffective for iodide of silver), with sulphites and bisulphites (only slightly active), with sulphocyanides (thiocyanates), with thio-urea and its derivatives.

399. Hyposulphite of Soda. Hyposulphite (or *thiosulphate*) of soda[1] ($Na_2S_2O_3.\ 5H_2O$) occurs in crystals of varying size, of density 1·7, containing 64 per cent of the active substance (anhydrous hyposulphite) and 36 per cent of water. It is deliquescent in moist air; it is very soluble in water, but insoluble in alcohol. It melts at about 122° F. in its own water of crystallization, and is completely dehydrated by heating to a temperature above 212° F., but this leads to partial decomposition unless special precautions are taken, and thus the price of anhydrous hyposulphite is excessive.

On dissolving in water, hyposulphite of soda lowers the temperature, thus forming a *freezing mixture*; for this reason the preparation of solutions should not be left until they are required for use. For making-up quantities of hyposulphite of soda on the commercial scale, a Baumé hydrometer should be used, together with the following table, which refers to a temperature of 60° F.—

Concentration of solution	10%	15%	20%	25%	30%
Degrees, Baumé	7°	10°	12·5°	15°	18·5°

Solutions of hyposulphite decompose slowly, even when kept from air and light; sulphur is deposited, whilst a little sulphite is formed in the solution.

With very few exceptions, acids (even the weakest) and acid salts decompose hyposulphite

[1] After as perfect a fixing as possible there always remains, under the greatest densities of the image, a very small amount of silver bromide, which can be developed or dissolved after the silver of the image has been eliminated by a sulphuric solution of permanganate.

[2] Cyanide of potassium is now almost entirely replaced by cyanide of sodium. Both of these salts, even in very small amounts, are extremely dangerous poisons, if absorbed by the mouth or through a scratch in the skin. Exposed to the air, their solutions slowly liberate hydrocyanic acid, which by accumulating in a badly ventilated place—as many photographic dark-rooms are—may cause indisposition or even serious illness.

[1] In chemical language, the word hyposulphite sometimes signifies the salts which are commonly known as *hydrosulphites*.

of soda more or less rapidly, according to the concentration and strength of the acid. This decomposition manifests itself by the gradual formation of sulphur, which is set free in such a condition (colloidal sulphur) that it is only seen with difficulty. The particles unite with one another, and at first a bluish opalescence appears, then a white turbidity, and finally a yellow precipitate is formed; at the same time sulphur dioxide and sometimes sulphuretted hydrogen are set free, whilst in the solution sulphate of soda and thionates (Seyewetz and Chicandard, 1895) are formed. Once started, this decomposition goes on until the hyposulphite is completely destroyed.

Among the common acids and acid salts, boric acid and bisulphite of soda alone cause no decomposition of hyposulphite solutions; or at any rate, the decomposition is so slow as not to occur during normal times of storage.[1]

This property of bisulphite of soda in relation to hyposulphite causes sulphite of soda to behave as a protector of hyposulphite against acids. The latter are not able to attack the hyposulphite until all the sulphite has been converted into bisulphite.

Neutral or acidified solutions of hyposulphite attack a great many metals, the action being particularly rapid in the case of zinc, so that zinc washing trays are quickly corroded when used continually. Nickel is only slightly attacked, and tanks of this metal may therefore be used for fixing baths, provided that the solutions are removed when fixing has been finished. For commercial use, tanks of wood, glazed earthenware, or even of lead, lapped and self-soldered, are employed.[2]

Neutral solutions of hyposulphite only attack metallic silver very slowly, even when it is in such a finely divided condition as in photographic negatives; even then, free access to the air must be allowed for the action to occur (Haddon and Grundy, 1896). Thus, there is no harm in leaving photographic images for several hours[3] in a *neutral* fixing bath, provided that the negatives or prints are fully covered with solution; an appreciable reduction would appear on any portions sticking up from the liquid or lying on the surface.

Acid solutions of hyposulphite of soda, on the other hand, slowly attack metallic silver (A. Lainer, 1890) without the intervention of atmospheric oxygen, the solution of all the silver in a negative sometimes being complete in 48 hours. Leaving negatives or prints for long periods in acid fixing baths is therefore to be avoided.

Alkaline solutions of hyposulphite have practically no action on the silver of photographic images.

400. The Chemistry of Fixation. When a very small quantity of hyposulphite comes in contact with a large excess of a salt of silver it tends to form hyposulphite of silver; this salt is unstable, like almost all hyposulphites, and decomposes quickly into brown or black insoluble sulphide of silver and sulphuric acid, which remains in solution.

This explains the stains which are formed on sensitive surfaces, particularly on print-out papers (containing soluble salts of silver), when they are touched by fingers soiled with hyposulphite.

It is quite otherwise when the salt of silver comes in contact with a large excess of hyposulphite of soda in sufficiently concentrated solution. Again, hyposulphite of silver tends to be formed, but this salt combines at once with excess of hyposulphite of soda, forming *complex hyposulphites of silver and sodium*. These salts are comparatively stable and are sharply differentiated in all their properties from a *mixture* of the two simple hyposulphites. For example, these complex hyposulphites have a sweet taste,[1] whilst hyposulphite of soda has a bitter and sulphurous taste, and the salts of silver generally have a very disagreeable metallic taste.

The composition of these complex salts appears to vary according to the nature of the salt of silver which is caused to react with hyposulphite of soda (Gaedicke, 1903; Lumière and Seyewetz, 1907). Whatever the original salt of silver, however, according to the proportions of hyposulphite and of the silver salt, one may always obtain either a soluble

[1] Sulphiding of sensitive plates or papers has, however, been noted in a dark-room, where a dish is always kept containing such acidified fixing baths.

[2] Addition of 1 per cent sulphate of soda to fixing baths prevents or retards considerably the attack of acid fixers on lead (G. Milliani, 1921) without interfering with the normal course of fixing.

[3] The silver of images fixed with hyposulphite of soda contains traces of some sulphur compound not yet identified. After dissolving away the silver by means of suitable reagents, this substance remains in the coating in the form of silver sulphide (Lüppo-Cramer, 1923).

[1] Some workers make use of this fact in order to judge of the progress of washing by applying to the tongue one of the prints under treatment.

complex hyposulphite or an insoluble complex hyposulphite.[1]

It is obvious that it is the formation of the soluble complex hyposulphite which must be aimed at during fixing, because only a soluble salt can be removed by washing. The soluble complex hyposulphites contain, for a given quantity of silver hyposulphite, a higher proportion of hyposulphite of soda than the insoluble hyposulphite; their formation requires the presence of a large excess of *available* hyposulphite of soda, which is not already saturated with salts of silver.

These complex salts decompose spontaneously in the cold, depositing silver sulphide; this decomposition is very rapid in the absence of an excess of hyposulphite of soda,[2] and is accelerated by heat and light. It is well-known that used fixing baths deposit in time a black sludge consisting mainly of sulphide of silver.

The rules which must be followed in order to ensure the effective fixation of photographic plates, films, and papers follow logically from these facts.

401. The Mechanism of Fixation. The mechanism of fixation has been studied specially by Sheppard and Mees (1906) and by Warwick (1917). These workers used very different experimental methods, but arrived at identical conclusions, which are in conformity with the general laws of physical chemistry.

A fixing bath dissolves per unit time a constant fraction of the mass of silver bromide existing in the coating at the commencement of the interval of time considered.

The magnitude of this fraction depends on the temperature and on the effective concentration of the bath; it is independent of the silver content of the emulsion, of the quality of the gelatine, of its degree of swelling, and even of previous hardening of the film;[3] it is greater for silver chloride than for the bromide, and for the bromide than for the iodide; for the same silver salt it is greater if the emulsion is one consisting of fine grains.

The disappearance of the milky layer of silver bromide does not indicate that the solution of this substance is complete, but only that the opalescent layer is so much reduced as to be invisible; at this instant there may be still more than 5 per cent of the original silver halide undissolved.[1]

In the same way that the best time of development may be determined by multiplying by a suitable factor the time taken for the first details of the image to appear (§ 384), so, by multiplying the time of disappearance of the silver bromide by a factor, the time necessary to give satisfactory fixation may be calculated. The best margin of safety is obtained, when single-bath fixation is employed, by keeping the negative in the fixing solution after the apparent disappearance of the silver bromide for a time equal to that taken for the milky appearance to disappear.[2]

The curves in Fig. 172, taken from the experiments of Warwick, show, for a surface of 1 sq. dm. of negative emulsion of average coating weight, the quantities of silver bromide (expressed in weights of metallic silver) to be dissolved and already dissolved at the various stages of fixing in a 20 per cent solution of hyposulphite of soda at 65° F. The curves shown as heavy lines refer to an undeveloped plate; the finer lines refer to a developed plate. A study of the curves shows the gradual progress of fixation.

402. Additions to Fixing Baths. At the instant of plunging negatives or prints into the fixing

hardening of the gelatine by means of alum; on the contrary, it is appreciably increased by treatment with formaline (W. Clark, 1929).

[1] Some very ingenious experiments by E. R. Bullock (1922) appear to show that when fixing emulsions consisting of silver iodo-bromide, the silver bromide is almost totally dissolved when the solution of the iodide is beginning.

[2] If, for example, at the time of disappearance of the visible silver bromide 95 per cent of this salt has been dissolved, keeping the negative in the bath for another period equal to the first will allow of the solution of 95 per cent of the residual silver bromide, which is no more than 5 per cent of the original amount present. Thus 95 + 4·75 (= 99·75) per cent will be dissolved; the residue, amounting to no more than 0·25 per cent of the original quantity of silver bromide, will be partially dissolved in the first of the washing water since the latter soon takes up a sufficient quantity of hyposulphite of soda to behave as a supplementary fixing bath.

[1] The formulae of these salts are respectively (H. Baines, 1929)—

(A) Insoluble complex hyposulphite:
$AgNaS_2O_3$, H_2O.

(B) Soluble complex hyposulphite:
$Ag_3Na_5(S_2O_3)_4$, $2H_2O$.

Solutions of complex hyposulphites may be caused to deposit the complex salt (B) (e.g. by the addition of alcohol), whilst solutions saturated with silver deposit spontaneously the insoluble salt (A).

[2] The soluble complex salt is decomposed in a pure aqueous solution if its concentration corresponds to more than 3·24 per cent of metallic silver; the greater its concentration the greater the excess of hyposulphite of soda required to render it stable (E. Römmler, 1929).

[3] The duration of fixation is not modified by previous

bath, the gelatine (and in the case of papers the base also), in spite of intermediate rinsing, is impregnated with the developing solution, especially in the deeper layers of the film. There is thus danger of development continuing in irregularly-distributed zones. Further, the accumulation of these substances in the fixing bath as more and more negatives are treated tends to produce troubles such as dichroic fog (§ 433) or general coloration of the gelatine by the oxidation products of the developer. Lastly, under these conditions, the fixing bath would become slightly alkaline, and it is in such alkaline media that maximum swelling of gelatine occurs, so that it becomes very tender and tends to reticulate (§ 434). These difficulties may be avoided by acidifying the fixing bath to a slight extent by the addition of bisulphite of soda (J. M. Eder, 1889), or of acetic acid in presence of sulphite of soda,[1] (A. Lainer, 1889) or of boric acid (H. Reeb, 1906; J. I. Crabtree, 1933).[2]

When the temperature of the bath or of the wash water, or of the air in which drying is to be done, rises above 68° F., it is advisable to harden the gelatine. From every point of view it is best in such cases to combine this operation with that of fixation by adding an alum to the fixing bath.[3] It remains, therefore, to decide which of the two available alums, ordinary alum (white) or chrome alum (violet), is preferable. Taking into account only hardening efficiency, choice should be made of chrome alum, and this is, in fact, always used in very hot climates; its price is, however, considerably greater than that of ordinary alum, and also certain printing papers when treated with chrome alum retain—even after washing—a very slight green tint.

After treatment with alum, the tendency of gelatine to swell is greatly reduced, and its melting point is very considerably raised, sometimes to a temperature above 158° F.

In a warm and moist atmosphere spontaneous drying is generally slower than the growth of liquefying bacteria. Gelatine which has been suitably treated with alum will resist even the heat of direct sunshine, and drying can then be sufficiently rapid to prevent local liquefaction (L. J. Bunel, 1924).

403. The Chemistry of Fixation in Presence of Alum. The reactions of ordinary alum

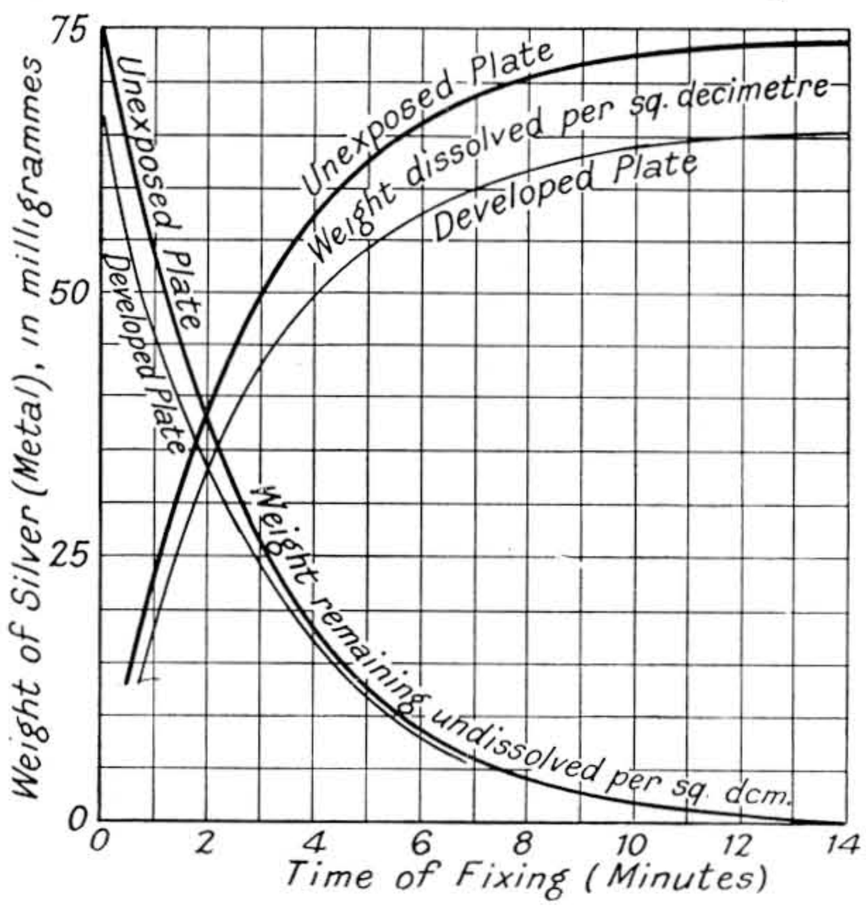

FIG. 172. STAGES OF FIXING
(Warwick)

(double sulphate of aluminium and potassium[1]) substances with an aldehyde character (hydroxy-aldehydes, dialdehydes, etc.) can be employed for hardening gelatine.

[1] Sheppard, Elliot and Sweet (1923) showed that whenever considerations of cost do not prohibit the use of acetic acid, the mixture of this acid with sulphite is much the best; in presence of the acetate of soda so formed the free acidity corresponds only with a fraction of the total available acidity, the difference forming a reserve of acidity.

[2] An objection sometimes made to the use of acid baths is that the exhaustion of the solution is masked, and that thus there is a risk that the bath may be used beyond its power, the permanence of the images not being ensured. A neutral bath soon begins to become discoloured by the oxidation products of the developer and to throw down a brown sludge of silver sulphide and reduced silver, changes which suggest the necessity of replacing the old bath by a new one within a reasonable time.

[3] Gelatine may be hardened by solutions of formaline (formaldehyde), but, whilst cases of slow alteration, physical or mechanical, are rare with alum-hardened gelatines, several have occurred in which formaline-treated gelatines have become brittle or even powdery. Thus it is advisable, except for negatives or prints which are of merely passing interest, always to avoid the use of formaline or its derivatives (trioxymethylene, etc.). Formaline is much more effective in a solution rendered alkaline (ammonia must not be used) than in a neutral or acid solution, and may, therefore, then be used at a greater dilution; rinse in water after each immersion in formaline. It may be added that formaline is very irritating to the eyes and the lungs, has a very unpleasant smell, and causes an objectionable hardening of the skin. Very many other

[1] Ordinary alum $Al_2(SO_4)_3$, K_2SO_4, $24H_2O$, occurs in large crystals or, more commonly, as a white powder obtained by crushing the crystals. The solubility in water is about 9 per cent at 50° F., 13 per cent at 68° F., and 30 per cent at 104° F. The salt and its solutions are stable. The active substance in it is the aluminium sulphate which may, in fact, be used in place of it in proportion of two parts of aluminium sulphate to three of alum. The double sulphate of aluminium and ammonium, also known as alum, is available since some years. The appearance, solubility, and hardening

with hyposulphite of soda have been studied very completely by Seyewetz and Chicandard (1895); the reactions are almost the same with chrome alum (double sulphate of chromium and potassium).[1]

On prolonged boiling, hyposulphite and alum are mutually and completely decomposed; sulphur and alumina are precipitated, sulphur dioxide is liberated, and sulphate of soda is formed in solution.

In the cold the reaction is different; hyposulphite of aluminium tends to be formed. This substance is very unstable, and breaks down into aluminium sulphate and sulphuretted hydrogen. The latter, by reacting with excess of hyposulphite of soda, slowly yields bisulphite and hydrosulphide of soda with precipitation of sulphur. The sulphate of aluminium being regenerated, the same reaction is repeated, but always slowly, because of the protective action of the bisulphite of soda, which is formed and which is only very slowly converted into thionates.[2]

These reactions may be prevented or, at least, very much retarded, by the addition of sulphite or bisulphite of soda (Seyewetz and Chicandard), or of acetate or citrate of soda (P. Mercier, 1894).

Hardening by alums is favoured by neutral or alkaline condition, but when a mixture of ordinary alum and hyposulphite of soda is stabilized by sulphite, acid must be added, otherwise a white precipitate of aluminium sulphite will be deposited. This deposition of aluminium sulphite would occur, especially within the gelatine, on account of the alkali of the developer carried over with the negative, and this precipitate would be very difficult to remove.

For the different reasons given in the preceding paragraph and above, an alum fixing bath must be acid to a sufficient extent to prevent precipitation of aluminium sulphate, even after a comparatively large quantity of developing solution has been added to it. It must, however, not be so acid as to decompose the hyposulphite of soda.

Hardening by alum is considerably reduced by the action of oxalic, tartaric, or citric acids, or of their salts, especially at high concentrations.[1] Acetic, formic, and analogous acids and their salts are free from this drawback.

404. Fixing Capacity of Hyposulphite for Silver Halides. Hyposulphite of soda does not dissolve with equal facility the different silver salts occurring in an emulsion. Moreover, the power of the same weight of hyposulphite to dissolve the same silver salt increases as its concentration is raised. The following values correspond with saturation of the hyposulphite after long mechanical agitation, gelatine being absent (Richards and Burnells Faber, 1889)—

Concentration of Hyposulphite	Weight of halide dissolved per litre		
	Silver chloride	Silver bromide	Silver iodide
10%	41 grm.	37 grm.	3 grm.
20%	91 grm.	78 grm.	10 grm.
50%	—	213 grm.	—

Under normal conditions of photographic practice the dissolving power of hyposulphite of soda is considerably less.

Almost all modern negative emulsions contain silver iodide, which is present also in some positive emulsions (notably in positive cinematograph emulsions). This iodide tends to lower considerably the fixing power of hyposulphite. The inactivity of hyposulphite towards silver iodide explains the slow fixation of certain very sensitive emulsions, and especially anti-halation plates having a substratum of silver iodide.

It must also be remembered that every plate, film, or print introduced into the fixing bath, brings with it a certain amount of water and takes away with it an approximately equal amount of the fixing solution, when it is transferred to the washing tank. Thus the bath is gradually diluted, and at the same time the total amount of available hyposulphite decreases much more rapidly than it would do merely

properties of this salt are the same as for common alum; the only inconvenience attending its use in fixing baths is that if the solution becomes slightly alkaline a little ammonia is set free, and this tends to cause dichroic fog.

[1] Chrome alum, $Cr_2(SO_4)_3$, K_2SO_4, $24H_2O$, usually occurs in large dark violet crystals of satisfactory purity. The substance itself and its solutions are very stable; at the most the crystals lose a little water from the surface, becoming covered with a grey powdery layer. Its solution, when prepared cold, is greyish-violet, becoming green when warmed. This change of colour accompanies a modification in the internal structure of the salt, but this leads to no appreciable alteration in its hardening power. Chrome alum is more soluble than common alum, especially on warming the mixture so that the change to green occurs; the solubility then becomes more than 50 per cent at 68° F. For some years chrome alum itself has often been replaced by the double sulphate of chromium and ammonium, the properties of which are very similar.

[2] The acceleration of these reactions on warming the mixture is made use of for the sulphide toning of prints on development papers (§ 590).

[1] Alum-hardened gelatine may even be de-tanned by immersion for some time in a 5 per cent solution of citric acid (Proctor & Wilson, 1916).

Concentration of hyposulphite (pure solutions)	Weight of silver bromide dissolved: In 100 c.c. of the bath, at saturation	Weight of silver bromide dissolved: In 100 c.c. of the bath, without subsequent stain	By 1 grm. of hyposulphite without stain	Average number of negatives (9 × 12 cm.) fixed by 1,000 c.c. of bath without subsequent stain
5%	2·0 grm.	1·25 grm.	0·250 grm.	33
15%	6·3 grm.	3·8 grm.	0·253 grm.	100
45%	20·5 grm.	5 grm.	0·111 grm.	133

15% solution of hyposulphite with addition of:	Weight of silver bromide dissolved: In 100 c.c. of the bath, at saturation	Weight of silver bromide dissolved: In 100 c.c. of the bath, without subsequent stain	By 1 grm. of hyposulphite without stain	Average number of negatives (9 × 12 cm.) fixed by 1,000 c.c. of bath without subsequent stain
1·5% liquid bisulphite	6·1 grm.	1·65·grm.	0·110 grm.	45
1·5% liquid bisulphite and 0·5% chrome alum	5·9 grm.	2·20 grm.	0·147 grm.	60

on account of the reaction of hyposulphite of soda with the silver salts.

By putting more and more negatives or prints into a fixing bath in an attempt to saturate the solution with silver salts, the disappearance of the silver salts would be rendered very slow, and the last samples to be fixed in a reasonable time would certainly become yellowish after some days, due to silver sulphide, formed from the insoluble complex hyposulphite and occurring fairly uniformly throughout the gelatine layer.

The first determinations in this field having an immediate practical bearing on photography were those of Lumière and Seyewetz (1907). These authors did not confine themselves to the determination of the maximum solubilities of silver bromide in pure hyposulphite, hyposulphite with bisulphite, with and without chrome alum; they also determined the silver content at which any of these baths must be considered as unsuitable for further use, at least when fixation is carried out in a single bath.

The above tables summarize the results—

These results show that with single-bath fixation the efficiency of action of the hyposulphite decreases as its concentration increases, and is still further depressed by acidification of the bath, especially in the absence of alum.

It is somewhat curious that, in spite of the fact that silver chloride is more soluble than the bromide in hyposulphite of soda, the practical limit of fixation is more rapidly reached in the case of the chloride; solutions of hyposulphite saturated with silver chloride more easily deposit the insoluble complex hyposulphite.

405. Speed of Fixation—Various Factors. The influence of the concentration of the bath and its temperature on the rate of fixation has been very carefully investigated by Welborne Piper[1] (1912–1914); the two graphs (Figs. 173 and 174) show, for a given emulsion, the nature of the variations which occur when the first phase of fixation (disappearance of the milky film of halide) in pure sodium hyposulphite is considered.

It is seen that whatever the concentration of the fixer, the process is most rapid at the higher temperatures, and the greatest speed is always obtained at a concentration of 40 per cent. At higher concentrations fixation becomes slower as the concentration rises, on account of the increased difficulty with which these solutions diffuse into the gelatine.

The rate of fixation is reduced as the bath becomes charged with more silver; the following table (P. Strauss, 1925) shows the influence of silver salts on the time of disappearance of silver bromide in a 25 per cent solution of hyposulphite—

Silver salt dissolved per 100 c.c. of bath	Silver bromide	Silver chloride
0	73 secs.	73 secs.
1 grm.	92 ,,	92 ,,
2 ,,	101 ,,	94 ,,
4 ,,	121 ,,	112 ,,
6 ,,	239 ,,	204 ,,

Silver chloride retards fixation less than an equal weight of the bromide, despite the fact

[1] The experiments of this author comparing the hyposulphites of soda, potash, ammonia, and lime showed that for each hyposulphite fixation is most rapid at a certain concentration. For the hyposulphites of soda and ammonia, the optimum concentrations are respectively 40 per cent and 15 per cent; the duration of fixation is the same for both at a concentration of 33 per cent; at lower concentrations than this the soda salt acts more slowly, but more rapidly at higher concentrations. For example, at 20 per cent concentration the ammonia salt fixes five times more quickly than the soda salt. The hyposulphite of ammonia is not obtainable commercially, and thus cannot be used practically. We shall see that equivalent mixtures may be made, the use of which, however, is not always to be recommended.

that the chloride contains 75 per cent of silver and the bromide only 57 per cent. From this it is evident that the exhaustion of the bath,

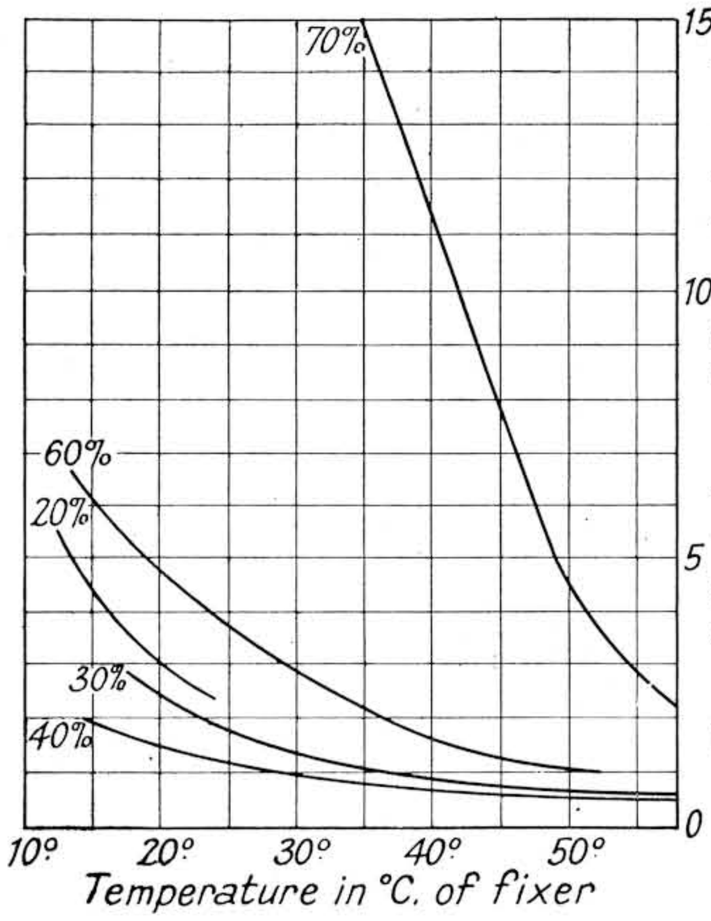

FIG. 173. VARIATION OF FIXING ACTION WITH TEMPERATURE
(Piper)

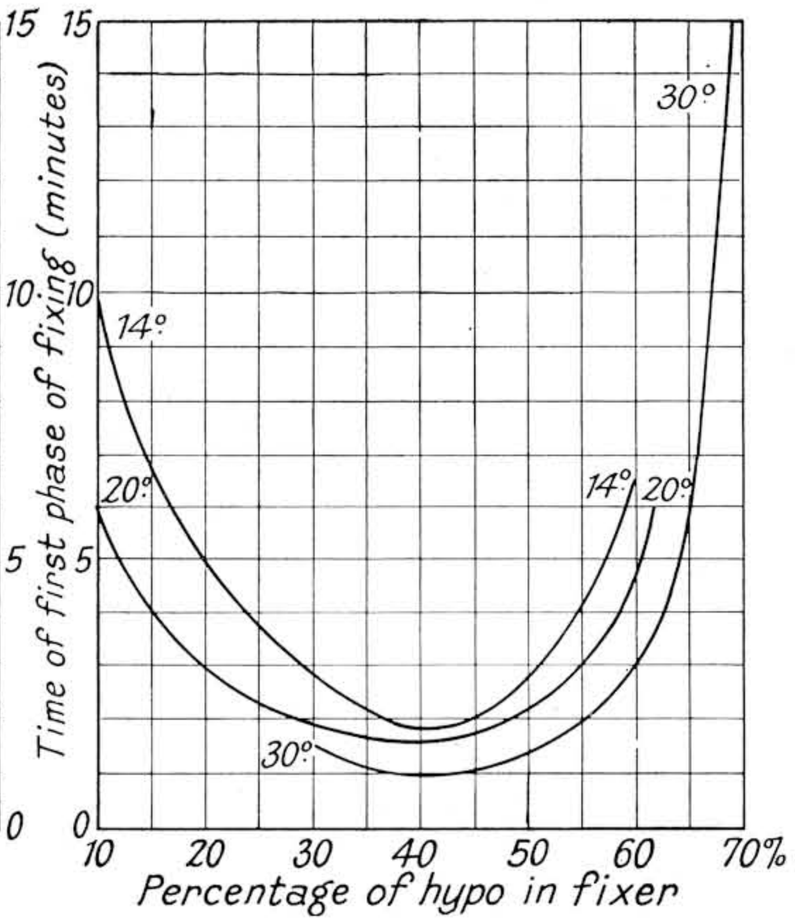

FIG. 174. VARIATION OF FIXING ACTION WITH STRENGTH OF HYPO BATH
(Piper)

caused by the formation of silver hyposulphite, is not the only factor to be considered, but that the rate of fixation must be influenced by other salts arising from the reactions occurring. As a matter of fact, the addition of sodium bromide to the bath retards fixation, whilst sodium chloride accelerates it.

By reason of the very small solubility of silver iodide, the presence of a very little iodide in a solution of hyposulphite is sufficient to retard fixation considerably; the following table shows the retarding influence of this salt on a 25 per cent solution of hyposulphite—

Potassium iodide in 100 c.c. of the bath	0·00	0·02	0·08	0·32 grm.
Time of fixation	73	91	147	558 sec.

Sulphate of soda slightly retards fixation, and all the salts of the heavy metals (copper, lead, etc.) behave in the same way. The nitrates of soda or potash accelerate fixation when present in small quantities, but at concentrations of 4 per cent or above they retard it. The salts of ammonia, particularly the chloride (ammonium chloride, or sal ammoniac), have a very strong accelerating action, which is, however, not so great with emulsions containing silver iodide (Agfa, 1906; Lumière and Seyewetz, 1908 and 1924), in spite of the fact that the addition of ammonium chloride to a solution of hyposulphite allows it to dissolve more silver iodide.

The accompanying graph (Fig. 175) summarizes the observations of Welborne-Piper (1914) on this subject. It is seen that for each concentration of hyposulphite there is an optimum concentration of ammonium chloride. This optimum becomes smaller as the concentration of hyposulphite is increased.

The acceleration of fixation by the addition of ammonium salts is, however, counterbalanced by a disadvantage (Lumière and Seyewetz, 1908). The complex hyposulphites of silver and ammonia formed under these circumstances are much less stable than the complex hyposulphites of sodium and silver; the practical limit of use is only about half, and the risks of discoloration of the image are increased. This acceleration, although advantageous in cases of

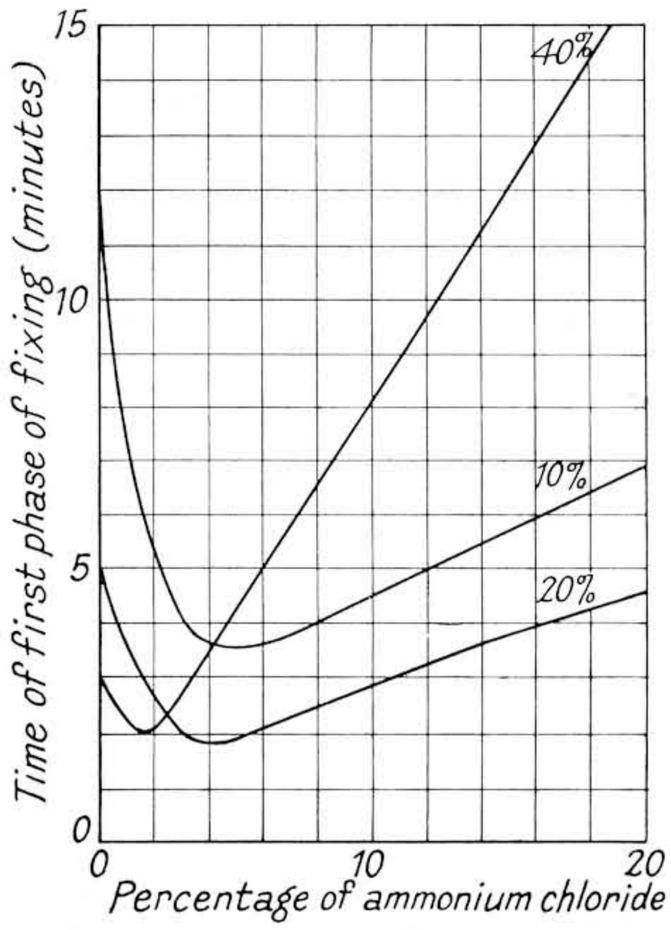

FIG. 175. EFFECT OF SAL AMMONIAC ON RATE OF FIXING
(Piper)

extreme urgency, has no practical application in ordinary practice, particularly when negatives are to be kept.

406. Fixation in Two Successive Baths. In all industrial operations involving the extraction of a substance by a solvent, the mass to be treated is at first extracted with solvent already almost saturated in previous operations, fresh solvent being only used to extract from material which is almost exhausted. Often, indeed, the process is made continuous by causing the solvent to circulate in the opposite direction to that of the material to be treated. This method of systematic extraction, which allows a solvent to be used most efficiently, may be applied with advantage to photographic fixation; it permits of making the most of a solution of hyposulphite whilst giving perfect fixation and permanence of the images. Furthermore, it has the advantage that the residual silver salts are left at higher concentration, and therefore may be recovered more economically, such recovery being always carried out more easily when the substances are in concentrated solution.

In 1894 A. Miethe, on the basis of the experimental results of Haddon and Grundy, recommended fixation in two successive baths, separated by a brief rinsing. Under these conditions the first bath may be used well beyond the normal limit possible when fixation is carried out by the single-bath method. In fact, this bath will not be discarded until the first phase of fixation, indicated by the disappearance of the milky layer of silver halides, occupies an abnormally long time. It is true a portion of the silver will remain in the form of the insoluble hyposulphite, but during the second stage of fixation, carried out in a solution of hyposulphite which is almost fresh, the complete solution of the silver salts will be effected. Negatives treated by this process will be fixed as well as if a fresh bath of hyposulphite had been used from the start.

Since the negatives reach the second bath almost completely fixed, there is little more to be done, and thus the practical limit of safety is not attained. When the first bath has to be abandoned, the second is made the first and is itself replaced by a new one.

Negatives are taken from the first bath when there appears to be no more silver bromide to dissolve; they are then placed in the second bath and allowed to remain for about the same time as in the first bath.

407. Choice of the Best Concentration of Fixer. The amateur, having to develop only one or two negatives, and not wishing to keep the bath for subsequent use, will preferably use a fairly dilute bath, for example, 15 per cent hyposulphite (= 3 oz. in 20 oz. of water).

The professional or commercial worker, working almost continuously and using the two-bath method, will be well-advised to use much more concentrated solutions, which may be almost completely exhausted.

If speed of fixation only be considered, it would appear best to use a 40 per cent solution (§ 405), but other factors lead to the use of a less concentrated bath.

For one thing, the sudden change of concentration on passing from a too concentrated fixing solution to the washing water, especially if the water is comparatively warm, may cause frilling or reticulation with plates and films, or blisters with papers. For another, if white light falls on the sensitive coatings during fixation, and if the concentration of the fixer be more than 30 per cent, there may occur in the film a slight insoluble residue which will not disappear, however long the negative or print be left in the fixing bath; at concentrations above 50 per cent, this insoluble residue may form even in the dark (Welborne-Piper).

For these different reasons fixing baths are usually employed at concentrations between 20 per cent and 30 per cent, i.e. 4 oz. (200 grm.) to 6 oz. (300 grm.) of crystallized hyposulphite of soda per 20 oz. (1,000 c.c.) of bath.

408. Tests for Exhausted Fixer. When fixation is carried out by the single-bath method it is obviously only possible to calculate the area of sensitive material which has been fixed by a given volume of the bath. This calculation is, however, not likely to be of any value, unless data are available concerning the amount of silver in the emulsions used and the volume of the solution removed by the plates, etc., already fixed.

It is sometimes considered that a fixing bath has reached its limit of safety when the time of fixation of a given emulsion becomes double that required with a fresh bath at the same temperature.[1] As a matter of fact, this method of testing results in carrying the use of a fixing bath considerably beyond reasonable limits, and would be more suitable for deciding the exhaustion point of the first bath in the case of two-stage fixation.

More accurate indication is obtained by employing a method of direct control suggested

[1] This test may be carried out on small portions of old film, which may sometimes be bought at a reduced price.

by Gaedicke in 1906, and recommended by Lumière and Seyewetz as being satisfactory. A fixing bath should be considered as exhausted (as a single bath or as the second bath in the two-stage method) when a drop of it, placed on blotting or filter paper, turns brown on exposure for some time to moist air and sunlight.

Lastly, a more direct method (Bayer, 1921) is to withdraw $2\frac{1}{2}$ oz. (100 c.c.) of the bath and to add to this quantity of solution $\frac{1}{4}$ oz. (10 c.c.) of a 4 per cent solution of potassium iodide; the bath may be considered as exhausted, so far as the single-solution method is concerned, when a permanent yellow precipitate is formed.

409. Preparation of Fixing Baths. Workers cannot be too strongly recommended to mix correctly the substances used in the preparation of fixing baths.[1] These solutions are sufficiently stable to allow of being prepared beforehand in fairly large quantities. In order to reduce the bulk due to large quantities of stock solution it is a simple matter to prepare the actual baths when needed for use from more concentrated solutions.[2]

Neutral Fixer. A solution of hyposulphite without any addition is used—

A	Hyposulphite of soda, crystals	3 to 6 oz. (150 to 300 grm.)
	Water, to make	20 oz. (1,000 c.c.)

This solution may be prepared when required for use by diluting a stock solution of 50 per cent or 60 per cent of hyposulphite of soda.

When the solution is prepared in the same vessel in which it is to be used, the hyposulphite is placed in a muslin bag hung over the vessel or attached to one side. The hyposulphite is sprinkled with a little tepid water in order to hasten its solution and to compensate for the lowering of temperature; the volume is then made up to the desired amount with cold water.

Stock solutions may be made up with cold water when there is no particular hurry.

Acid Fixers. Any of the following formulae may be employed—

B	Hyposulphite of soda, crystals	4 to 6 oz. (200 to 300 grm.)
	Soda bisulphite lye[1]	1 oz. (50 c.c.)
	Water, to make	20 oz. (1,000 c.c.)
C	Hyposulphite of soda, crystals	4 to 6 oz. (200 to 300 grm.)
	Boric acid, cryst.	175 to 263 grs. (20 to 30 grm.)
	Water, to make	20 oz. (1,000 c.c.)
D	Hyposulphite of soda, cryst.	4 to 6 oz. (200 to 300 grm.)
	Sulphite of soda, anhydrous	45 gr. (5 grm.)
	Acetic acid, glacial[2]	50 min. (5 c.c.)
	Water, to make	20 oz. (1,000 c.c.)

In preparing solution (B), if the solution of the hyposulphite has been made with warm water it must be allowed to cool before adding the bisulphite.

In the case of solution (C), the boric acid should be dissolved separately in about half the quantity of water, which has been previously warmed. This solution must not be added to the solution of hyposulphite until it has almost completely cooled.

In preparing solution (D), the sulphite of soda should be dissolved in about $3\frac{1}{2}$ oz. (100 c.c.) of cold water, and the acetic acid should be diluted about five times. The diluted acid is then slowly added with constant stirring to the solution of sulphite. This mixture is finally added in small quantities at a time to the cold solution of hyposulphite.

Alum Fixers.[3] It must suffice to mention two

[1] We have seen (§ 405) that a very cold or very concentrated solution fixes very slowly, and also that a newly prepared solution of hyposulphite is very cold (§ 399); it is therefore not surprising that a fixing bath prepared just before it is needed by throwing haphazard, and often liberally, some handfuls of hyposulphite into a dish of water, does not fix. If, weary with waiting for fixation to be completed, one throws the negative into a dish of water fixation will be very rapid, but in the absence of excess of hyposulphite it will not be complete.

[2] The presence of particles of rust in the water used for preparing solutions (water distributed in iron pipes), or in the hyposulphite (stored in sheet iron containers), may cause solution of the silver in the image at the points where these particles settle, the oxide of iron being slowly converted into ferric bromide by contact with the bromide dissolved in a partly-used fixing bath. (W. F. A. Ermen, 1923.)

[1] See § 364 for the equivalence between soda bisulphite lye and dry potassium metabisulphite.

[2] Acetic acid may be obtained commercially as 99 per cent (called glacial acetic acid because it freezes at about 60° F.) or as 40 per cent acid (8° Baumé). In concentrated solutions acetic acid is violently caustic, and must not be allowed to touch the skin.

[3] The greater the quantity of sulphite present in the bath, the less is the resultant hardening of the gelatine in an alum fixer, so that negatives developed in a bath which is rich in sulphite should be rinsed prior to introduction into a hardening fixer, and then moved about continuously in the fixer when they are first immersed.

formulae in which chrome alum and ordinary alum respectively are used—

E	Hyposulphite of soda, cryst.	4 to 6 oz. (200 to 300 grm.)
	Soda bisulphite lye	1 to 1½ oz. (50 to 75 c.c.)
	Chrome alum	90 to 130 gr. (10 to 15 grm.)
	Water, to make	20 oz. (1,000 c.c.)
F	Hyposulphite of soda, cryst.	5 to 6 oz. (250 to 300 grm.)
	Hardening solution as below	1 oz. (50 c.c.)
	Water, to make	20 oz. (1,000 c.c.)
Hardening Solution	Common alum	2¼ oz. 60 gr. (120 grm.)
	Acetic acid, glacial	2 oz. (100 c.c.)
	Sulphite of soda, anhydrous	525 grs. (60 grm.)
	Water, to make	20 oz. (1.000 c.c.)

For the preparation of solution (E) the chrome alum may be dissolved in about 3½ oz. (100 c.c.) of hot water; after cooling, this solution is added to the bisulphite, previously diluted with an equal volume of water; the mixture is then poured into the solution of hyposulphite.

In order to make up the *hardening solution* employed in the preparation of solution (F), the alum and the sulphite are dissolved separately, the alum in about 12 oz. (600 c.c.) and the sulphite in about 4 oz. (200 c.c.) of warm water; the acid is poured into the alum solution and well shaken, and lastly the solution of sulphite is added and the total volume made up to 20 oz. (1,000 c.c.) with water.[1]

The hyposulphite solution and the hardening solution should be cold before they are mixed.

At temperatures above 68° F., alum fixers tend to decompose spontaneously with deposition of sulphur; such mixtures are therefore only made up in such quantities as are needed for immediate use.[2]

In trade practice it is advantageous during the repeated use of a hardening fixer, to compensate for the additions of alkali (developer impregnating the emulsion) by carrying out periodically re-acidification by adding diluted acids (sulphuric acid for chrome alum; acetic acid for ordinary alum). The technique has been described by J. I. Crabtree and his collaborators (1929–1930).

410. Fixation in Practice. Inasmuch as the ill effects of faulty working are not immediately evident, fixation and the washing processes which precede and follow it are not always carried out so carefully as is the case with development.

It is essential to realize that no visible sign shows that fixation is perfect; a negative may be quite clear after fixing and drying and yet may not be properly fixed; it may not have been allowed to remain long enough in the fixer, or the fixing bath itself may have been exhausted. Images (negatives or positive prints) which are required to be kept for a long time must be fixed in a manner which conforms minutely to the following directions; these directions are much less important in the case of images which have merely passing interest.

411. The negatives, after being rinsed free of developer (§ 375), are placed in one of the fixing baths already prescribed, generally an acid fixing bath, or, in warm weather, in a fixing-hardening bath compounded with alum.

Non-actinic light should be used, at any rate when putting plates in the fixer; in the case of neutral fixing solutions, negatives should be allowed to remain in the bath for at least three minutes before being exposed to white light; this period may, if necessary, be reduced to one minute in the case of acid fixing baths.

On account of the injurious action of the least trace of hyposulphite on certain developers, the various dishes employed must be so arranged that no splashes or drops of hyposulphite can fall into the developer.[1] The fingers should be rinsed in water after every time they have come into contact with hypo.

Fixation being generally slower than development, it is advisable, in the case of continuous working, to provide larger dishes or tanks for this purpose than for development. For example, when working with dishes, one would use for

[1] If the alum and sulphite are mixed in the absence of the acid a white precipitate of aluminium sulphite is formed; this precipitate is very difficult to redissolve.

[2] The relative stability of the various baths can be ascertained by accelerating their decomposition by means of heat. It may be taken for granted that a bath that deposits sulphur only after 3 days heating at 113° F. will not be decomposed at 68° F. except after a month (J. I. Crabtree and H. A. Hartt, 1929).

[1] It will be found best to arrange dishes in the order in which they are to be used, those containing fixing solutions being placed at a lower level than those in which development is carried out. No drops of hyposulphite solution must be allowed to fall on the floor, etc.; on drying, these would give rise to dust of a very harmful nature towards negatives subsequently handled in the room. For the same reason those negatives which in course of treatment are found to be useless should be at least rinsed before being thrown away.

fixation those of a size capable of taking two or four of the negatives under treatment.

During fixation, negatives must be well covered by the solution.

After some minutes in the fixing bath, an examination of the back of the negative shows that the milky coating of the silver halides under the developed image is beginning to dissolve, the disappearance of the milkiness occurring as a rule more quickly under the denser parts of the image where least silver bromide remains.

From the time when the last traces of milkiness have disappeared the negatives are kept in the bath for a time equal to that already taken, or, preferably, when two-bath fixation (§ 406) is employed, they are transferred to the fresh bath and allowed to remain there for an equal time. When fixation is complete, negatives are washed.

If fixation is effected by the single-bath method, the solution must be frequently renewed so as not to pass the safety limit. In case of doubt, any of the tests described earlier (§ 408) may be used.

In large commercial establishments periodical re-acidification of the fixing baths is necessary.[1] The control of the exhaustion can sometimes be effected automatically by measuring the amount of sensitive material treated (especially with cinematograph films) or by the application of empirical rules, which can be worked out on the basis of experience. When these methods cannot be applied, re-acidifying with acetic acid requires the previous determination of the residual acidity by the works chemist or by a foreman who has been trained to carry out this simple test. On the other hand, re-acidification with bisulphite may be done without special precautions.

A thin, metallic-looking film of silver sulphide sometimes appears on the surface of partly-used fixing solutions which are kept undisturbed for some time in open tanks. This is due to the reaction of sulphuretted hydrogen on the silver hyposulphite dissolved in the bath. There is the liability of particles of this film adhering to the gelatine of negatives; it may be removed by skimming the surface with a piece of filter paper or a cloth, according to the size of the tank.

412. Recovery of Silver from Exhausted Fixing Solutions. On the average, about three-quarters of the silver contained in sensitive materials pass into the fixing baths. There is from 15 to 30 gr. of fine silver per dozen plates (7 × 5 in.) and about 60 gr. per hundred sheets of paper of the same size. Assuming that the necessarily imperfect process of recovery in a small works only permits of a yield of 75 per cent of these quantities, one can estimate the value of this recovery, allowing for the cost of precipitation (never very high) and for the cost of extracting the silver by the smelters.[1]

The silver in fixing baths is generally precipitated in the form of sulphide. Under these conditions, and provided that the silver is not completely precipitated, fixing baths may be used again, at least once, though not indefinitely, because the accumulation of soluble bromides and particularly of iodides[2] in the solution considerably retards fixation in solutions so regenerated.

The silver may also be recovered in the metallic state by precipitation on plates or scraps of zinc, iron, or copper. In this case the silver is contaminated with various impurities and needs to be refined.

To the residues thus collected are added the ashes of clippings from prints and films stripped from waste negatives.

413. When the silver is precipitated as sulphide, the exhausted baths must be stored and treated in a yard or shed which is far enough from dark-rooms, store-rooms, etc., to avoid any risk of sulphuretted hydrogen coming in contact with sensitive material.[3]

The used fixing baths are thrown into a barrel having wooden hoops[4] and with the top re-

[1] In particular, fixing solutions containing common alum usually become useless through the precipitation of aluminium sulphite long before the hyposulphite is exhausted; if, for want of re-acidifying in time, sulphite of aluminium begins to precipitate, the solution must be thrown away.

It is possible, within limits, to retard the neutralization of fixing baths by using *slightly* acidulated water for rinsing the negatives before fixing. The liquid used for this purpose must be renewed or re-acidified when it no longer reddens a piece of blue litmus paper (general property of acids).

[1] A fixing bath of 25 per cent strength (for negatives) can contain at the most 4·38 to 5·25 grains of silver per fluid oz. (10 to 12 grm. per litre). A fixing bath for positives of 15 per cent strength (papers) can contain 2·19 to 2·62 grains per fluid oz. (5 to 6 grm. per litre).

[2] By adding thallous salts the iodides could be eliminated to the state of insoluble thallous iodide (A. Steigmann, 1934).

[3] The liberation of sulphuretted hydrogen may be prevented by making the baths alkaline with milk of lime or caustic soda.

[4] The hyposulphite soaking through the wood would rapidly cause metal hoops to rust. This would occur even if the hoops were varnished, the varnish coming away in scales.

moved. This barrel should be mounted on bricks; it must be provided at about a quarter of the way from the bottom with a wooden outlet or tap, so that the greater part of the liquid may be run off, and at the bottom with a bung-hole, from which the sludge of silver sulphide may be periodically run off. Old developing solutions may also be poured into the same vessel, since they contain a little silver. These solutions will reduce a small quantity of the silver in the fixing solutions to the metallic state, and they will also tend to neutralize the residual acidity of the fixing baths. When the barrel is about three-quarters full, about 700 gr. (= 1½ oz. approximately) of sodium monosulphide[1] is added for every gallon of liquid to be treated (10 grm. of the sulphide for every litre of liquid). This sulphide should be previously dissolved in a little boiling water. The mixture is stirred with a stick and left to settle. The next day a little of the clear supernatant liquid is taken in a test tube (if the liquid is turbid it must be filtered) and a few drops of a solution of sodium monosulphide are added[2]; if no black precipitate forms, the silver has been completely precipitated; if, on the contrary, a black precipitate forms, add to the liquid in the barrel about half as much of the sodium monosulphide as before and repeat this process if necessary until all the silver has been precipitated.[3] After a final settling, the liquid is run off by the tap through a filter-bag of close felt placed so as to trap any silver sulphide which might be lost.

After the cask has been emptied in this way several times, as successive lots of fixing bath are treated, the black sludge is run off through the lower bung-hole and is collected in a tray. After drying, this mud is stored in a box until a sufficient quantity has been collected for sending to the smelter.[1]

Pure dry silver sulphide contains 87 per cent of its weight of fine silver. On account of numerous impurities which accompany it, silver sulphide obtained in the manner described works out at about 60 per cent if it is precipitated from baths free from alum, and at about 40 per cent when it is contaminated with alumina or chromium hydroxide resulting from the interaction of sulphide with alums.

414. To recover the silver from old fixing solutions by another method, a barrel of 5 to 10 gallons capacity, and equipped as in the previous case, may be used. Before starting the recovery process, the liquid must be neutralized, by means of caustic soda or milk of lime (lime first wetted with a little water and then left to slake) if it reddens blue litmus paper, or with sulphuric acid if it turns red litmus blue; at the neutral point practically no change of colour takes place with either kind of paper. Then the liquid is acidified by adding 350 gr. (or a little more than 3¼ oz. (fluid)) of ordinary sulphuric acid[2] (66° Baumé). After stirring, about 2 lb. of granulated or scrap zinc for every gallon of liquid (200 gm. per litre) are thrown into the barrel; this quantity causes rapid precipitation (in about 24 hours, if the mixture is stirred from time to time) of silver (partially in the form of sulphide), which forms a black deposit on the zinc and in the bottom of the barrel.

An appreciable economy of zinc may be effected by enclosing the latter in a bag of coarse cloth suspended in the liquid.

On the next day, in order to find whether or not the liquid still contains any dissolved silver, proceed as follows: In a test-tube take a little of the clear, reddish, supernatant liquid, acidify with a few drops of sulphuric acid, shake (make sure that the liquid reddens blue litmus paper), and add about one-fifth of its volume of a 10 per

[1] See note on §589.

[2] Since the precipitation of silver is complete, provided that the mixture contains excess of sulphide, the complete precipitation may be tested by dipping into the liquid a strip of filter paper moistened with a solution of acetate or nitrate of lead. The blackening of the moistened part (due to the formation of lead sulphide) shows that the amount of sulphide is sufficient (J. I. Crabtree and J. F. Ross, 1926).

[3] The following procedure may be adopted: into each of several beakers pour the same known volume of the solution to be precipitated, and then to each of them add increasing amounts of the precipitating reagent. After stirring and allowing to settle, the solutions are acidified with a little hydrochloric acid and then a few drops of a solution of sodium monosulphide are added to each. If, for example, no more precipitate forms in the beaker containing a quantity of monosulphide corresponding with 700 gr. per gallon of the solution (10 grm. per litre), whilst in the beaker in which the amount of monosulphide corresponds with 560 gr. per gallon (8 grm. per litre) an additional precipitate is formed, then if it is desired to recuperate the fixing solution, the whole of it will be treated with 560 gr. of monosulphide per gallon (8 grm. per litre) or with an amount slightly less than this. If, on the other hand, the whole of the silver is to be precipitated, then 700 gr. (or a little more) of monosulphide per gallon will be used.

[1] The cost of refining is almost the same whatever the amount of material treated.

[2] See § 364 (footnote) for the precautions to be observed when handling this acid.

cent solution of sodium monosulphide; if no black precipitate forms, the silver is completely precipitated (a black precipitate obtained without the liquid being acidified has no significance); if silver still is present, keep the zinc in contact with the liquid for another day. As soon as all the silver is deposited, decant the liquid by the side opening.

One charge of zinc suffices for seven or eight such recovery processes without any appreciable slowing of the action. When the precipitation needs from two to three days, it may be accelerated by adding about 3 oz. of zinc per gallon of liquid (20 grm. per litre). Under these conditions, 1 lb. of zinc allows of the recovery of about 1 lb. of silver.

From time to time the black deposit is collected and dried.

These various operations should be carried out in a well-ventilated place, as far as is convenient from dark-rooms and any sensitive materials.[1]

[1] Among other methods for the recovery of the silver, we mention its deposition on porous surfaces that are lightly coppered (O. Bernstein, 1935), which operation demands no special precautions, and, in factories operating large quantities, electrolytic deposition (K. C. D. Hickmann and W. Weyerts, 1931) which permits de-silvered baths to be used again, subject to the same reservations already stated.

CHAPTER XXX

WASHING

415. The Function of Washing. Washing is for the purpose of removing all soluble salts formed during fixation and also constituents of the fixing bath held by the plates, films, or papers, whether as liquid absorbed by the gelatine or as liquid adhering superficially to the prints or negatives.

According to circumstances, it may be desired to carry out this process either in the minimum time or with the smallest possible amount of water.

If fixation is complete, and if, as a result, the gelatine film contains nothing but the silver of the image and soluble salts, the salts are readily washed out, provided the washing is systematic. If, on the other hand, fixation is incomplete, the insoluble salts which remain in the film obviously cannot be eliminated, no matter how long the washing is continued. It is probably with a view to establishing a "mean" between these two experimental facts that photographers generally state that "hyposulphite is strongly retained by gelatine." This is true of the insoluble hyposulphites which result from bad fixation, but it is not so for the soluble salts, which are the only ones remaining after complete fixation.

We will now consider the mechanism of washing in changes of water and in running water, and will show that, used according to the most usual practice, washing in running water is a means of consuming the greatest amount of water with the smallest effect. We will then consider the conditions which require to be fulfilled in order to wash negatives or prints in the most rational manner. We will then discuss the use of *hypo-eliminators*, as a result of which it will be seen that there is only one perfect eliminator applicable to all cases, viz. plain water.

It may be useful to re-state here an evident truth: an object cannot be cleaner, after washing and drying, than the water used for washing it.

416. The Mechanism of Washing in Several Changes. The most complete investigations of washing in successive baths are those which were made by A. V. Elsden and A. W. Warwick (1919). The methods followed by these two experimenters were almost identical. Plates or films, developed or not, were fixed in baths of known strength and then placed successively into exactly measured equal quantities of water, where they remained, each time, for the same period. The quantities of hyposulphite and soluble silver in each of these washing waters were determined. Finally, after completing the washings, the amount of hyposulphite remaining in the film was also determined.

These experiments, and many others (Haddon and Grundy, 1893–96; Gaedicke, 1897; Lumière and Seyewetz, 1902), established the fact that, in accordance with the general law of the diffusion of crystalline substances through permeable membranes, the elimination of soluble hyposulphites by washing with water is most easy.[1] Far from requiring in any way an extraction, the hyposulphites are automatically expelled from the gelatine as long as their concentration in the gelatine is not equal to the concentration in the liquid in which the plate is soaked.[2]

As soon as a negative, impregnated with any salt which does not react with gelatine (as does alum, for example), is placed in pure water, the salt in the portion of the solution adhering superficially to the negative becomes distributed in the water, while the salt absorbed by the gelatine diffuses out, at first very quickly and then more and more slowly, until finally the concentrations in the gelatine and the water are equal.

If the negative has been placed at the bottom of a dish or tank full of still water, the saline solution which diffuses out of the negative, and which is denser than the water, accumulates above the plate; this solution soon becomes equal in concentration to the solution which impregnates the gelatine. From this moment all movement of salt is arrested, since the uniform

[1] A little hyposulphite is retained by the paper that acts as a support of a print or paper negative, and can only be eliminated by washing for a time considerably longer than that necessary for plates or films.

[2] If a film of gelatine, impregnated with fixing solution of normal concentration, is placed in pure water at a temperature of about 60° F. the "osmotic pressure" of the hyposulphite, that is to say the pressure which the salt exerts in leaving the gelatine, is considerably greater than 5 lb. per square inch.

diffusion of the salt through all the layers of the liquid in the tank takes a very considerable time. If, however, the water is stirred mechanically, or if the negative is so placed that the saline solution can leave it and be replaced by pure water, the diffusion proceeds much farther, each separate washing having a much greater effect. This is the case if the negative is supported face downwards in the upper part of the tank, or is placed vertically in the tank with a sufficient depth of water below it to allow for the accumulation of the denser solution.

When a 13 × 18 cm. (7 × 5 in.) plate is removed from a fixing solution it takes with it about 5 c.c. (about 80 minims) of solution (the total of the liquid adhering superficially to the plate and the liquid impregnating the gelatine). If the fixing bath contains 20 per cent of hypo the plate will have removed 1 grm. of it from the bath. If now the plate be placed in a dish containing 95 c.c. of water, the total volume of liquid will be 100 c.c. By rocking the dish, equilibrium will be attained between the internal and external concentrations of hypo, which will become 1 per cent, that is to say, a concentration of one-twentieth the initial concentration. By repeating this process, the concentration becomes one-twentieth the previous concentration, and so on—

Number of washings	1	2	3	4	5
Concentration %	1	0·05	0·0025	0·000125	0·000006

It can be assumed (K. Hickman and D. A Spencer, 1922) that a residual amount of hypo equal to 0·0016 grm. per square decimetre has no adverse influence on the permanence of silver images. By taking a quantity ten times as small (to ensure absolute safety), viz. 0·00016 grm. per square decimetre, or 0·00036 grm. for a 13 × 18 cm. plate, it will be seen that if we regard this quantity as being distributed in 3 c.c., which is about as much as the volume of water absorbed by the gelatine, the washing may be considered effective as soon as the concentration in the washing water has been reduced to 0·00036 × 100/3, or about 0·01 per cent. This stage will be reached after a very small number of separate washings, provided each one is carried out to completion in a sufficient volume of water.

Equilibrium between the concentrations inside and outside the gelatine is generally reached after 5 minutes' rocking of the dish, but 99 per cent of the amount which will diffuse from the gelatine has usually come out in about 2 minutes. It will thus be seen that, for specially rapid washing, it is best not to prolong each separate washing beyond 2 minutes, provided that the dish is kept constantly moving.

As a general rule, when washing, one does not trouble to rock the dish or to wait until equilibrium has been reached, for it is only when the available amount of water is restricted that these considerations become important, and then special methods are employed (§ 420). In general, then, each washing withdraws only a fraction of the amount of hypo which could be removed if equilibrium were attained, and this fraction, which varies according to the mode of working, is to some extent a measure of the effectiveness of the washing. We have already seen that washing is more effective if the plates are held vertically than if they are placed face upwards at the bottom of the bath; the efficiency can be still further increased if, on removing the plates from the tank, they are allowed to drain so that most of the surface liquid is not carried over into the next bath.

Most experimenters agree that there is nothing to be gained by prolonging the duration of each washing beyond 5 minutes, and that if ½ oz. of water per square inch of emulsion is used, 5 or 6 washings are quite sufficient to assure that the permanence of glass or film negatives will be as great as the efficiency of the fixation permits.

417. The Mechanism of Washing in Running Water. Washing tanks are frequently so badly adapted to the object in view that the water flows directly from the tap to the sink without flowing *through* the tank, and therefore does not remove more than an extremely small proportion of the hypo which it should remove. The effectiveness of washing depends neither on the amount of water used nor on the time during which the water flows, but on the volume of water which comes into effective contact with the plate and on the rapidity with which the water charged with hypo is replaced by fresh water. Unless a scientifically constructed apparatus which permits of the frequent renewal of the water in contact with the plates is employed, running-water washing is slower than washing in separate changes of water, its only advantage being an economy in labour.

If, after 1 minute's washing in running water, the concentration of the liquid in the gelatine is found to have been reduced to a certain proportion of its original value, then the concentrations determined at one-minute intervals will always be in the same ratio as long as the conditions of washing remain constant; but the magnitude of this ratio, which is to some extent a measure

of the effectiveness of a washer, varies from one apparatus to another.

The best method of washing a single plate in running water is to allow water to flow directly across the plate (this method is not applicable to papers or films); the elimination of hypo is then about twice as quick as it is when the plate is placed in a washing tank through which water passes much more violently.

The worst conditions are obtained by using a large dish, or a tank without outlet at the bottom, and a thin stream of water; owing to the presence of eddies in the water, the speed of washing varies considerably from one part to another.

Experience shows that in the case of a bath with vertical grooves, fed by a constant stream of water which is removed by a siphon, the elimination of hypo is more rapid when the tank is fully charged with plates; it would seem that when there are no plates in the tank the incoming water dilutes the salt solution instead of displacing it.

The very accurate work of Hickman and Spencer (1922–25), to whose work we are indebted for many of the data in this paragraph, has shown that washing in running water may be considered as taking place in two stages: the total replacement of the water in the tank, and the attainment of equilibrium between the liquid in the gelatine and the water in the tank. The time necessary for equilibrium varies, according to the type of plate or film used, from 5 to 10 minutes; obviously no time can be set down for the complete renewal of the water in the tank, but it often requires more than an hour. It is easy to determine experimentally the time required for this phase of washing, viz. by the following method.

Place in the dish or tank (in the case of a vertical tank, the place normally occupied by plates to be washed should be filled with plain glass) about 30 minims of a 2 per cent solution of safranine, or of a saturated solution of permanganate[1] for each square inch of surface to be washed[2] ($6\frac{1}{2}$ drams for a $4\frac{1}{4} \times 3\frac{1}{4}$ in. plate), and note the time necessary, under normal conditions of washing, for the water in the tank to become completely decolorized; the end-point can be best judged by comparing water from the tank and pure water, using two identical glass vessels against a white ground for the purpose.

If, for example, it is usual to use six $4\frac{1}{4} \times 3\frac{1}{4}$ in. plates, then about 5 oz. of the coloured solution would be required. If an interval of 35 minutes is necessary for complete decolorization of the solution, then for normal washing with the same water supply the time should be 35 minutes plus the 10 minutes necessary for obtaining equilibrium between the solution in the gelatine and that in the tank; the washing time, therefore, under the conditions of the test, will be 45 minutes.

418. Apparatus for Washing. The washing of a small number of plates is frequently carried out in dishes, but for continuous work vertical tanks (tanks with grooves, or tanks, without grooves, into which the plates are placed in developing racks) are generally preferred. To ensure efficient washing it is essential that the tank be effectively traversed by the current of water. For this, two arrangements are used concurrently; water can be led in at the bottom of the tank and out over the top or through an overflow pipe, or it can flow directly from the tap into the tank and then out through a tube which communicates with the bottom of the tank and empties at a level[1] slightly lower than the rim of the tank.

Various washing devices have been made in which the water is kept in turbulent movement either by entering through obliquely-set nozzles, or by the plates or films being mounted on a drum which is kept rotating by a very simple water motor (paddle-wheel or simple turbine).

Inasmuch as it has long been realized that washing in running water is slower than washing in changes of water, many inventors have attempted to construct an automatic apparatus for changing the water so that the handling, which is the only objection to this method of washing, may be eliminated. These machines are usually either tanks operated by a large emptying siphon, which is self-priming directly the tank is full, as with the tantalus cup, or ordinary tanks fed intermittently from a flush

[1] Permanganate solution should be employed only in tanks constructed of glass, earthenware, or slate; safranine only should be used with tanks of wood or metal.

[2] Since the gelatine backing of films holds as much hypo as the emulsion, their area must be doubled in order to calculate the amount of coloured liquid required for the test. The back of a film should be washed as carefully as the front; the spots of silver sulphide, arising from the decomposition of the silver hyposulphite absorbed in the fixing bath, are liable to occur also on the back.

[1] The type of tank commonly used by amateurs, viz. one with an outlet only in the bottom, can easily be converted by fitting to the tap a rubber tube which is tied to the tank by string; or by soldering to the interior of the outlet a lead tube bent into the form of a swan's neck.

tank, or tanks with automatic flushing controlled by the outlet plug, or finally, for small sizes of plates, dishes which empty by tilting when full, and then immediately return to the filling position under the tap.

For economy in water, several washing tanks are sometimes arranged in *cascade form*, but it is then necessary, to ensure proper washing, to place the plates to be washed in the lowest tank first and then to transfer them successively from tank to tank, so that the final washing takes place in the upper tank containing pure water. Unless this counter-current movement of the plates is looked after, plates in the lowest tank will not be in contact with pure water, and hence will not be completely washed until after the washing of all the other plates in the tanks higher up in the series.

To ensure that the washing is done under the best possible conditions, the tanks should be smooth inside and should not be larger than necessary; a plate can be washed more quickly in a small than in a large tank.

419. Control of Washing. Since the completion of the washing process is not accompanied by any indication that all the salts have been eliminated, various methods have been suggested for ascertaining when washing is complete.

It is possible, for example, to discover that the water which drips from a plate or print does not contain enough hypo to be detected by the usual methods, i.e. does not decolorize a starch solution which has been made blue with a trace of iodine, or a solution of permanganate, both solutions having been made of a suitable strength.

These tests are very good in their way, but it is essential that their exact significance be understood. The fact of finding no hyposulphite in the drippings certainly indicates that the soluble hyposulphites have been removed and that, as a consequence, the washing is complete. But it gives no information as to the completeness of the fixation, and hence of the permanence of the image, the test giving no indication of insoluble complex hyposulphite of silver and sodium which may be in the film.[1]

[1] This control of fixation may be made, after washing, by placing on the clear part of a plate or print a drop of a 10 per cent solution of sodium sulphide. If fixation is not complete, a brown spot, more or less dark, will appear. As a spot of this sort is indelible, it is obvious that the test is applicable only to waste plates or papers, unless the material is deliberately sacrificed for the purpose of the test.

Dissolve 9 gr. of potassium permanganate and 8 to 16 gr. of carbonate of soda in 20 oz. of water (1 grm. and 1 to 2 grm. respectively in 1,000 c.c.). This solution has an intense violet colour. Collect the drainings from several plates or prints in one glass vessel, and an equal quantity of the water used for washing (taken straight from the tap) in another. Add to each one drop of the above permanganate solution. If the colour persists in the liquid consisting of the drainings for as long as it does in the fresh water, the washing may be considered to be complete.[1]

Finally, attention should be drawn to a check method invaluable in experimental work, but the practical use of which is restricted as it involves the loss of the images tested, and is therefore suitable only for cinematographic films of which it is always possible to cut off a strip of a few inches. Pour into a test tube 10 c.c. of a solution containing 25 grm. mercuric chloride and 25 grm. of potassium bromide per litre. Then put in 10–15 sq. cm. of image (film, or layer of gelatine scraped off a plate). The presence of hyposulphite manifests itself by an opalescence of the liquid and the dosage can be ascertained by comparison with samples prepared with known very weak dosages of hyposulphite (J. I. Crabtree and F. E. Ross, 1930).

In commercial establishments the control of washing may be effected by comparing the electrical conductivities of the feed and waste waters of the tanks (K. C. D. Hickman, 1923).

420. Washing in Practice. As far as the amateur photographer is concerned, the choice between washing in running water and washing in changes of water will be settled by personal convenience; for the professional, or on the industrial scale, the choice will depend on the relative costs of water and manual labour.

If it be remembered that washing in running water is less effective when it is carried out in baths of large size, and that the hypo should be removed from the tank directly it soaks out of the gelatine, economy both in time and in water will result. It may be said that on the average *the first seven minutes are taken up with washing*

[1] Should the single drop of permanganate be instantly decolorized by the water used in the blank test (owing to the presence of organic matter), further drops should be added until a permanent pink colour has been obtained. The same number of drops should be added to the collection of drips.

A much more sensitive reaction, in which the traces of hyposulphite catalyze the discolouration by sodium nitride (N_3Na) of the iodine coloured by starch, has been described by E. E. Jelley and W. Clark (1929), but its application is more delicate.

the plates and the rest of the time with washing the tank (Hickman, 1925). It is therefore necessary to use tanks the fittings and size of which are such that the washing of the tank is almost as rapid as that of the film.

In a case of extreme urgency, water may be allowed to flow directly over the plate to be washed, or three successive washings each of 2 minutes may be given, but plenty of water must be used and the dish must be rocked continuously for the whole period; the interrupted washing should be subsequently completed.

In ordinary work, when washing in changes of water, five or six washings of about 5 minutes each in plenty of water are given. With running water, at least an hour should be allowed when using a tank which is effectively flushed with a rapid current of water; or, better, the time required for complete washing is determined once and for all for the tank in question with a given consumption of water (§ 414).

When the supply of water is very limited, the best results are obtained by employing for each washing only just enough water to cover the plates, draining the plates between each washing and increasing slightly the number of washings. For washing in running water the *capillary flow method* (L. Lumière, 1922) may be used. The complete washing of a plate $4\frac{1}{4} \times 3\frac{1}{4}$ in. may thus be done in 12 to 15 minutes with only about one ounce of water. For this purpose, the slow and regular capillary flow of water in an almost vertical ribbon of cotton twill is used. The water is fed from above by a tank, from which, so to speak, it is siphoned; the plate is placed on the twill, which has been previously wetted, in excluding air bells. The flow of water may be regulated by the height of the fall measured from the level of the water in the reservoir to the free end of the ribbon.[1]

Whenever plates are introduced one after the other into a bath to be washed together, the time of washing or the number of changes of water must be counted *from the insertion of the last negative*. The water into which a plate saturated with concentrated fixing solution is placed actually adds hypo to the gelatine of the plates which are already partially washed, and thus brings them to a condition very close to that at which they were at the commencement of washing.

In the case of films or prints left to themselves in a dish or tank, washing in running water is liable to be ineffective if the surfaces to be washed cover each other and thus afford mutual protection against free contact with the current of water. Washing in several changes of water is therefore the only possible way, but the films or prints must be kept constantly in movement; for example, by making two piles in the bottom of the dish and transferring the papers or films one by one from one heap to the other; also by handling them singly when transferring from one tank to another.

Contradictory opinions have been expressed on many occasions regarding various circumstances which are capable of affecting the speed of washing. It has been stated, for example, that the washing of plates which have been fixed in an acid bath is slower than the washing of plates fixed in a neutral bath, when, on the contrary, the swelling of the gelatine in a neutral bath prolongs washing considerably. It is often stated that washing is accelerated by increasing the temperature of the water and retarded by the use of alum in the fixing bath, while many experiments show that the speed of washing is independent of the temperature of the bath (more rapid diffusion is compensated by the swelling of the gelatine in the warmer water), and that alum added to the fixing bath does not retard the changes in the interior of the gelatine, unless in the interval the gelatine has been dried (Eastman Kodak Laboratories, 1921). It may be added that it would be the same if the alum treatment were carried out in neutral solution as a separate operation.

If, in certain circumstances, it is necessary to keep a plate in water for an unusually long time, it is best to add to the water a little bisulphite of soda (about 5 per cent) to stop the gelatine swelling excessively and thus becoming very tender. Plates which have not had the gelatine hardened by alum and which are kept for a long time in polluted water are liable to be attacked by bacteria, which will cause liquefaction of the gelatine in patches. For this reason plates should never be left in water overnight.

When the only water available for washing contains a large quantity of chalk, which tends to form a superficial fog on drying, it is well, to ensure that the negatives shall have a per-

[1] It should be noted that plates and prints can be washed in sea-water, except that at least two washes in soft water are necessary to remove the salts of the sea-water, and particularly the deliquescent magnesium chloride. The use of distilled water or of slightly acid water does not result in the complete elimination of hypo owing to the impossibility of converting the "hyposulphite of gelatine," formed during fixation in the acid fixing bath, into "calcium gelatinate."

fectly clear surface, to follow the washing with a few minutes' immersion in a 1 per cent solution of hydrochloric or acetic acid. This precaution is particularly to be recommended for the very small negatives used almost exclusively with large scale enlargement in which the presence of lime deposits, even imperceptible to the naked eye, increases in a troublesome manner the graininess of the image; and for all negatives when alcohol is used for rapid drying, since it avoids the formation of an opaque white fog, which would appear chiefly on those portions of the plate which had dried most rapidly (L. P. Clerc, 1917).

It is as well always to complete the washing of plates under a spray of perfectly filtered water, to free them from foreign bodies which may adhere to the gelatine during drying.[1]

421. Hypo Eliminators. The idea of attempting to destroy hypo instead of eliminating it is almost as old as photography. This idea is unfortunately opposed to common sense, and to a sufficiently large number of experimental facts. To begin with, a chemical action never "destroys"; it can only transform; and those who have commended such practice have usually not tried to discover whether the products of this transformation are any less liable to damage the image than is the hypo from which they have been obtained. On the other hand, the substance which actively alters images is not so much the hyposulphite of soda as the insoluble complex hyposulphite of silver and soda. It is therefore necessary to find out the form in which this salt of silver exists after the action of the eliminator.

All the substances which have been recommended as hypo eliminators are oxidizers; we may mention hypochlorite of soda or eau de Javelle (F. W. Hart, 1864), hydrogen peroxide (A. Smith, 1866), iodine (H. Vogel, 1872), potassium persulphate (Schering, 1894), sodium hypoiodite (P. Mercier, 1897), potassium percarbonate (G. Meyer, 1901), alkaline ammonium persulphate (Lumière and Seyewetz, 1902), alkaline perborates (G. F. Jaubert, 1903), and the sodium compound of p-toluene-chloro-amide-sulfonate (E. F. Shelberg, 1922), which, in aqueous solution, slowly decomposes to give hypochlorite.

As early as 1889, Traill Taylor stated that "if one wishes to take all the precautions which are necessary in order to apply the would-be hypo eliminators without danger to the photographic images, the operation will be found to be longer and more complicated than the washing itself."

Many experimenters who have studied the reactions involved in the oxidation of hyposulphites (notably Chapman Jones, 1899, and E. Sedlaczek, 1904) have shown that most of the oxidizers used attack the silver of the photographic image, and that in reacting with the hyposulphite they form tetrathionate and dithionate (as well as inert sulphate), which appear to be as dangerous to the image as is the hyposulphite itself; they also resemble hyposulphite in interfering with subsequent treatment, such as intensification.

Experiments made by A. E. Amor (1925) to determine the effectiveness of various eliminators, in which the residual hypo of plates at various stages of washing (with and without eliminator) was measured, show that the efficiency of oxidizers is less than that of a single washing in a 0·2 per cent solution of caustic soda, and that after one extra wash (the duration of each wash being 2 minutes) the elimination of hypo is more complete than it would be were an eliminator used for the same time, and much less risk of damage to the image is incurred.

Eau de Javelle is the most dangerous of all the eliminators, yet, in France, it is also the one most frequently employed. The resulting image contains silver chloride, which is liable to change on exposure to light, giving irregular violet-coloured patches; and, in fairly strong solution, eau de Javelle attacks both silver and gelatine.

The best method, then, is to leave these various reagents severely alone, and to use the only perfect eliminator, pure water, constantly applied to the surface to be washed. In cases of urgency, for taking a print, it is safe to print after a temporary fixation (§ 375) and one brief rinse, the print being made either by enlargement or by contact with a previously moistened printing paper.

[1] It is sometimes recommended that film negatives should be rinsed in water containing a little glycerine in order to give a greater suppleness to the dry film. But all photographic images which have been treated with glycerine remain permanently damp, and atmospheric action on the silver is thus facilitated; many cases have been cited of slow changes in images thus treated.

CHAPTER XXXI

DRYING

422. The Purpose of Drying. Photographic plates and films which have been washed at temperatures between 60° F. and 68° F., and have been wiped free of water clinging to the surface, contain an amount of water which is about six or ten times the weight of the gelatine in the emulsion, so that it may be as much as one or two grains of water per square inch of emulsion surface. In the case of films coated on the back with gelatine, an approximately equal quantity of water will be contained in this backing layer. The amount of water absorbed is considerably greater at higher temperatures.

Before wiping, the quantity of water adhering superficially to the surfaces of a plate or film amounts, for the two faces, to about 1·5 to 1·8 gr. per square inch, of which about three-quarters runs off in drops when the negative is held vertically. A portion of the remainder accumulates on the lower parts of the negative, whilst a certain amount evaporates.

In the process of drying, this water has to be evaporated without injury to the image (partial or complete melting, markings, reticulation, etc.); at the same time, the adhesion of dust to the moist gelatine must, as far as possible, be prevented.

Obviously, drying will be more rapid if superficial water is wiped off at the start.[1]

423. The Physics of Drying. The air always contains a certain amount of water in the form of vapour, this quantity varying greatly according to circumstances. Comparatively dry air, when kept in the presence of water or moist bodies, or into which water vapour is introduced by a boiler, will take up moisture to a certain maximum, which increases according to the temperature of the air. When this limit has been reached, the air is said to be *saturated* with moisture. The ratio of the quantity of water vapour present in a given volume of air to the quantity which would be present in the same volume of saturated air is called the *hygrometric condition*, the *fraction of saturation*, or the *relative humidity*. On cooling the air, its relative humidity is increased, and it may become saturated (condensation of mist or deposition of dew). Conversely, the relative humidity of air is decreased when the temperature is raised.[1]

Dry gelatine absorbs water in a moist atmosphere, whilst moist gelatine loses moisture in a dry atmosphere. In saturated air, which is unable to take up any more moisture, all evaporation is prevented, and as a consequence moist gelatine cannot be dried in it, even though the amount of moisture to be removed be very small. The rate of drying is very nearly inversely proportional to the relative humidity of the air; air which is warmed, and of which the relative humidity is thus reduced, has its capacity for drying increased to a greater extent when the rise of temperature is great. The practical limits of drying by this system are, however, quickly reached because of the risk of melting the gelatine. Since the air becomes loaded with moisture as evaporation proceeds, it soon becomes saturated, so preventing further drying, unless it is continually renewed at the surfaces of the drying material.

Gelatine should never be completely desiccated; it is considered to be dry when it contains no more than about 10 per cent or 15 per cent of moisture. Further drying renders it very brittle, a fault which would be specially evident with film negatives, and might also be attended with injurious effects in the case of glass negatives.

Drying in an atmosphere of less than 60 per cent relative humidity tends to dry the surface layer before the underlying portions; the evaporation of the imprisoned moisture is thus retarded. Injury may occur to negatives which are stored, or to films which are rolled, in this condition when the imprisoned water becomes re-distributed through the whole thickness of the coating.

[1] It must be noted that even after long and effective washing, the water held by the negative still contains traces of hyposulphite, too small indeed to be detected even by the most delicate means. As drying proceeds, however, adhering water collects in drops, which grow smaller and smaller, so that the whole of the hyposulphite in this water becomes concentrated in small areas in which may then be observed defects due to insufficient washing (K. C. D. Hickman, 1926).

[1] Air of 50 per cent relative humidity is considered as being very dry. In cold, damp weather the almost saturated outside air has its relative humidity lowered to 30 per cent or even less when it is warmed to the normal temperature of a workshop or dwelling house.

The drying of films in cinematograph printing works is carried out as a rule in a current of air at 70 per cent or 80 per cent relative humidity, at temperatures between 78° F. and 87° F.

The evaporation of water is accompanied by the absorption of heat, which, in the case of spontaneous evaporation, results in a lowering of temperature. Since, at the same relative humidity, the evaporation of water is slower as the water to be evaporated is colder, it is seen that drying tends to become progressively slower. This retardation is all the more marked when evaporation takes place simultaneously from both sides of a negative; a drop of water adhering to the back of a negative often results in retarding the drying of the portion of the gelatine layer immediately opposite to it.

424. Apparatus for Drying. Glass negatives are generally dried in the vertical position[1] in the grooves of a draining rack. These accessories are not always made in the most rational form, folding racks being as a rule the worst offenders. In the first place they are often unsteady, being so designed as to cause the diagonal of the plate to be very far from vertical, which is the most stable position. Secondly, the grooves are almost always too close together, allowing an insufficient circulation of air between the plates —so much so that it is no uncommon thing to find water which has been evaporated from one coating condensed as dew on the back of the next plate. This is generally avoided by using only one groove in every two or three. If care has been taken to wipe the glass sides of negatives before placing them in the racks, two negatives may be placed back to back in adjoining grooves, each pair of negatives being separated from the next by at least one empty groove. Another plan is to arrange the negatives all facing the same way, in order to avoid mistakes; a constant interval is then left between each.

If, for any reason, a plate has to be dried without a rack, it may be rested against the wall with its lower edge on several thicknesses of clean white blotting paper.

Cut films, if they have been developed, fixed, and washed in developing hangers, are generally kept in these hangers until drying has been carried out, the hangers being suspended from special racks or placed in ordinary plate racks. In the absence of hangers, films may be suspended from a stretched string in the open air, or inside a drying cabinet by hooks made from pins bent in the form of the letter *S*; or they may be pinned to the edges of shelves. Whatever method be adopted, films must be far enough from each other and from neighbouring objects to prevent their sticking together or to some other object, should they wave to and fro in a draught.

Lengths of film which are not much more than 3 ft. or 4 ft. long are generally hung by special clips to rods or stretched wires, the lower ends of the films being weighted by other clips of sufficient size.

Long lengths of film (cinematograph films, aerial film negatives, etc.) are dried by winding them on special skeleton drums, which are kept uniformly turning on their axes, or causing them to pass along a series of vertical pipes in which a current of moderately warmed air circulates in the opposite direction.

425. The Operation of Drying. Drying should be carried out in premises which are well ventilated, dry, and at a moderate temperature. Freedom from dust is another requirement, and for this reason it should be in a room where there is no need for constant passing to and fro—a certain means of raising dust. In commercial installations drying is carried out in special rooms into which filtered air, dry and warm, is forced.

It is essential that during drying there should be no sudden change of temperature, of relative humidity, or of speed of air currents. Every negative which is subjected to great changes in conditions of drying shows a distinct mark between the portions dried under different conditions. Those parts which have been dried most slowly are sometimes denser and sometimes less dense than others. In particular, negatives must not be allowed to stand in the sun during drying.

Before being set to dry, negatives should be wiped on the gelatine side (on both sides in the case of films) either with a rubber sponge which has been well squeezed out in water or with a grease-free chamois leather which has been soaked and wrung out.[1] For wiping a very

[1] Some drying racks are made with slightly inclined grooves; with these, the plates should be inserted with the gelatine facing downwards in order to prevent dust from being deposited on it.

[1] For lengths of film, use may be made of a pair of squeegees, hinged at one end and elongated to form handles at the other.

On continuous-working machines for dealing with films (cinematograph films, aerial film negatives, etc.), wiping is often done by jets of compressed air, which play obliquely on the two sides of the film. This air should be filtered in order to trap any drops of oil brought in from the compressor.

small number of negatives, they may be placed between two sheets of fluffless blotting paper or between the leaves of a book of filter paper, the hand being then passed over the paper with moderate pressure. In this way the duration of drying is considerably reduced, and also drops of water are prevented from causing marks due to the local retardation of drying.

Whenever possible, the glass sides of plate negatives should be wiped dry with a soft cloth; in addition to the fact that drying is thereby slightly accelerated, it is easier at this stage to get rid of small particles of gelatine or other foreign matter which may soil the back of the plate.

When once negatives have been placed in the racks or hung up, they must be left to themselves until they are dried, no matter how great the impatience to examine them may be.

In a very humid atmosphere a higher temperature leads to an increase of density and contrast. Whereas the evaporation of the water is rapid in a dry atmosphere, thus cooling the gelatine which is kept fairly firm even in comparatively warm air, evaporation is retarded in a moist atmosphere and cooling becomes negligible, so that the gelatine can become softened and allow of a re-arrangement of the grains of silver. Variations of 25 per cent have been noted, after drying in various conditions, in densities that were equal before drying (J. Crabtree; D. R. White, 1922).

Drying should never be undertaken in winter in a place where there is a risk of the temperature falling so low as to freeze the water with which the negatives are impregnated; "ice flowers," which would be formed under such conditions, would leave their distinct impression in the gelatine.

Certain insects, cockroaches, ants, etc., especially in warm climates, devour gelatine. In places infested by these creatures it is a good plan to protect negatives during drying by a mosquito net.

In warm, humid, and stormy weather, the gelatine of negatives is sometimes attacked during drying by colonies of microbes. During the course of very slow drying which such weather causes, these microbes may liquefy the gelatine in places, leaving the glass support bare. This trouble occurs especially with non-hardened negatives, when straw packing or other such material containing mildew is disturbed near the negatives during drying. In such atmospheric conditions it is well to hasten drying by bathing the plates after washing in water to which alcohol has been added (§ 428), or at least to finish washing in an antiseptic bath such as 3 per cent solution of phenol.

426. Distortion of the Image during Drying. Very slight deformations, quite negligible in the common applications of photography, occur in the film of gelatine during drying, especially near the edges. They may need to be taken into account in high-precision measurements (cartography, astronomy, etc.).

These deformations are mainly due to local inequalities of drying. They occur chiefly on negatives developed with a tanning developer (pyrogallol), on account of the fact that the denser portions of the image, which are tanned, contain less water than the surrounding gelatine. The presence of drops of water adhering to the gelatine surface, or even to the glass, causes similar deformations due to local retardation of drying. Every negative has a margin of about half an inch in which these deformations are fairly considerable. Distortion, which is due to inequality of drying, may be considered as temporary if the gelatine has not been hardened with alum, and with this exception it is possible to remedy the defect by allowing the negative to swell in water and to dry again with all necessary precautions, particularly by hastening drying by treatment with alcohol (§ 428).

427. Acceleration of Drying by Heat. The drying of glass negatives[1] or paper prints may be greatly hastened by a current of warm air, or by placing the material to be dried near a source of heat, provided that the gelatine has been hardened so as to raise its melting-point to a sufficient degree. Unless the heat is greatly moderated, this method, when applied to films, often causes a permanent deformation of the film base (notably curling at the edges), which, in a measure, is an obstacle to perfect sharpness of prints.

Negatives fixed in solutions containing alum, and especially in a fixing solution containing a large quantity of chrome alum (§ 409), will generally stand a temperature of 120° F. to 140° F. They may be dried in full sunlight, provided that no shadow falls on them, since shadows would cause local inequalities of drying. Drying in the sun is indeed often the only possible method in very warm and humid climates.

[1] The heating of the gelatine of a glass plate on which a current of warm air is directed can be limited by blowing a current of cold air on to the back surface at the same time.

In the case of negatives which have only passing interest (§ 402) and of which prints are urgently required, the gelatine may be rendered proof against melting, even at the temperature of boiling water, by bathing the negative for about 10 minutes in a solution of formaline or formaldehyde.[1] It is often recommended to use for this purpose a mixture containing 10 parts of this solution diluted to 100 parts with water. This is an excessive amount, for 5 parts in 100 is ample to give the desired hardening (J. McIntosh, 1900), whilst it has the advantage that less formaldehyde is liberated from the negatives during drying. When frequent recourse to this method of drying is necessary, it is best to obtain a sheet-iron drying box, through which air can be circulated and led to the outside, and in which the temperature can be raised to about 212° F.[2]

428. Rapid Drying with a Volatile Liquid. Many liquids evaporate much more rapidly than water, owing to their vapours not being commonly present in the air, to the fact that their boiling points are lower than that of water, and also because their heat of vaporization is much lower than that of water (half for methyl and ethyl alcohols, quarter for acetone). Such of these liquids as are miscible in all proportions with water may be employed to hasten the drying of the gelatine of photographic negatives and prints; in the case of films there is, of course, the additional requirement that they must not dissolve the film base. After some minutes' soaking in the selected liquid the latter will have almost completely displaced the water and drying will then be very rapid.

Considerations of cost only permit of the use of denatured alcohol (methylated spirit), which has the added advantage that it causes the gelatine to contract.[3] The alcohol, by gradually taking up water, becomes useless for this purpose after it has dealt with a number of negatives, and requires regeneration.[4] Too rapid dilution of the alcohol should be prevented by draining or wiping the negatives before placing them in it, and after the alcohol treatment is finished, the alcohol clinging to the negatives is collected. These precautions almost double the amount of material which can be dealt with by a given amount of alcohol (L. P. Clerc, 1917). Negatives of which some parts have already dried spontaneously should not be treated by this method on account of the risk of marks.

The extra speed of drying is obviously greater when concentrated alcohol is used, but the use of methylated spirit at its maximum concentration presents various difficulties. In addition to the precipitation of lime salts from hard water in the form of a white opaque fog (§ 420), it sometimes produces a dulling effect on the surface of the gelatine, which has been attributed to the dehydration of the gelatine cells (Lüppo-Cramer, 1915).[1] Also, the use of concentrated alcohol, by softening the base of film negatives and dissolving an appreciable proportion of the plasticizers, may cause frilling of the gelatine or permanent deformation of the film.

The following table shows the time required for drying negatives (7 × 5 in.) after 10 minutes' treatment in denatured alcohol to which water has been added in different proportions. These times are of course only relative, for they must depend also on the thickness of the gelatine and on the atmospheric conditions—

	Pure denatured alcohol					Pure water
Water (added) %	0	20	40	60	80	100
Time of drying.	40 min.	80 min.	115 min.	175 min.	210 min.	270 min.

It will be seen that whilst the effectiveness of alcohol decreases very quickly with dilution, alcohol diluted with water to a moderate extent (up to 20 per cent) is still considerably more rapid than spontaneous drying, and yet avoids the various troubles which may result from the use of too highly concentrated alcohol.[2]

[1] The liquid sold under the name of formaline is an aqueous solution of about 40 per cent of formic aldehyde or formaldehyde (a gas). It will sometimes be found to change on standing, white clots of trioxymethylene being formed. When this happens, it loses its effectiveness wholly or partly.

[2] Drying by heat after treatment with formaline may be accelerated still more if alcohol is used in place of part of the water for diluting the formaline.

[3] In fact it may almost be said that alcohol does not penetrate the gelatine but merely extracts the water, the attraction of gelatine for water being very small or non-existent (H. R. Proctor, 1909).

[4] Denatured alcohol diluted with water may be regenerated by shaking it with salts which take up water with great avidity and are not soluble in alcohol or water-alcohol mixtures, e.g. plaster of Paris or the carbonate of soda or potash.

[1] Concentrated alcohol can be utilized by employing two successive baths, of which the first contains a hygroscopic substance, for instance, 0·88 gr. of crystallized calcium chloride per fl. oz. (2 grm. per litre) (Schering and Kahlbaum, 1928), or a non-hygroscopic substance conferring pliancy, as for instance, 0·44 gr. of urea per fl. oz. (1 grm. per litre), or 4·4 gr. of salicylic acid per fl. oz. (10 grm. per litre) (Zeiss-Ikon, 1930).

[2] Methylated spirit becomes turbid on adding water because of the precipitation of lime salts from the water and of resinous or tarry substances present in the denaturing agent. Very clear dilutions of alcohol may be obtained by adding a small amount of ammonia

Negatives which have been passed through alcohol may, during drying, be subjected without harm, to a higher temperature than would be safe for negatives heavily charged with water.

After treatment by the alcohol method of drying, there is a temptation to consider as dry negatives which are really only dry on the surface and in which the deeper parts of the gelatine are still wet. If such negatives are piled together in this condition it may be impossible to separate them afterwards.

429. Instantaneous Drying by Dehydration of the Gelatine. Certain salts which are very soluble in water may be employed in very concentrated aqueous solutions in order to bring about the rapid dehydration of gelatine impregnated with water without causing any ill effects on the gelatine itself (Lumière and Seyewetz, 1912). Among the salts which may be used (aluminium sulphate, sulphate of soda, hyposulphite of soda, etc.), carbonate of potash in saturated solution gives the best results without harming the negatives, even in case of prolonged contact.

This method of drying should be considered as suitable for the *temporary drying* of negatives, permitting of their immediate use for periods up to several weeks. They must be given a further washing in order to get rid of traces of carbonate of potash from the gelatine.[1] This substance, after a time, may give rise to stains, or, in certain cases, to the separation of the film from its support. Since the washing of the negatives must be repeated at leisure, the first washing and even fixing may be shortened, these processes being completed later.

The negative containing water is immersed for 4 or 5 minutes in a saturated solution of carbonate of potash (about 53 per cent at 60° F.) or 110 parts of the salt to 100 parts of water; (this solution registers 52·5° on the Baumé hydrometer). The negative is rapidly wiped between blotting paper to remove the bulk of the adhering solution, and drying is completed by wiping the film with a soft cloth. The surface, which is very hard, is of glossy appearance. The negative may be used at once for printing.

The solution of carbonate of potash may be regenerated from time to time by dissolving more of the salt in it.

(about 10 minims per 20 oz. = 1 c.c. per litre), shaking with several changes of animal charcoal (about 175 gr. per 20 oz. = 20 grm. per litre) and filtering or decanting the clear liquid (A. Ninck, 1926).

[1] The washing of a plate or film impregnated with a very concentrated solution of salts should, preferably, be begun in a dish, using repeatedly just sufficient water to cover it, in order to avoid too sudden a change in concentration which might cause reticulation of the gelatine.

CHAPTER XXXII

THE CHIEF FAILURES IN NEGATIVE-MAKING

430. Preliminary Note. The enumeration of the faults which may occur during the various phases of the process of negative-making may be sufficient to discourage the novice in photography; it has, however, no other purpose than to allow the cause of a failure to be discovered. It must be admitted that any list of possible defects is never complete, unexpected failures sometimes occurring which cannot be traced to their causes.

When a beginner (and sometimes even an experienced photographer) meets with a failure he immediately blames the camera, the plates, the chemicals and their respective purveyors; almost always he forgets to ask himself what blunder he has committed.

Nobody is infallible, and, in spite of strict control, a manufacturer (of whom one cannot ask that he should test all his plates and films before issuing them for sale) will send out—but very seldom—a plate or film showing some slight defect. Long experience shows, however, that the great majority of failures are due to faulty working of which the photographer is often unconscious, and which he will not hesitate in good faith to deny.

If, after careful investigation, a fault appears to be due to manufacture, and is repeated on several plates from the same box or from the same emulsion, replacement may be demanded from the manufacturer. This will always be courteously furnished if it be courteously asked. In addition to the faulty negatives, some other plates (exposed or otherwise) which have not been developed should be returned, packed in their original wrappings. In order to identify plates sent back for testing, some distinctive mark should be made on them, so that the sender may have no doubts when, as frequently happens, faultless negatives are returned to him.

431. Faults Appearing During Development.[1] *The Image Does Not Develop.* Anti-halation plate exposed through the back; plate not exposed; absence of one of the essential ingredients from the developing solution. Put the plate aside for the time being in pure water, and then try to develop it later in another bath.[1]

The Emulsion Darkens Before any Image Appears. The sensitive surface has been exposed to light outside the camera.

The Image Appears Almost Lost by Uniform Fog. If those parts of the sensitive emulsion which were protected by the rebates, etc., of the dark slide are not fogged, the trouble is probably due to excessive exposure; to sunlight on the lens during exposure (absence of lens hood); or to the use of a lens of which some parts are dirty or covered with mist.

If the fog also covers the protected parts of the surface, several causes may be suspected: long storage of the plate or film under unfavourable conditions; wrongly-mixed developer (excess of alkali, insufficient bromide), or developer contaminated with hyposulphite or metallic salts from the materials of which dishes and accessories are made, or with sulphide formed in old developing solutions which have been kept for a long time. In either of these cases of fogging the cause may be (§ 200) the action of certain materials used in the construction of the dark slide (resinous wood, varnish, drying oils; zinc, aluminium, and their alloys), or of paper used for re-packing the plates or films between exposure and development; any printed matter on this paper may then leave an image more or less plainly visible than the image proper. Except in the latter case, prolong development as for a normal negative, adding a fairly large amount of bromide. In spite of being very dense, the negative will yield passable prints.

Fog Appears After the Image is Distinctly Visible. Development is being done too close to a dark-room lamp which is fitted with an

[1] Some of these defects, especially if they are not very marked, will not be found until later, sometimes not until after drying. For the characteristics of negatives which have been under-exposed or over-exposed, see §§ 376 to 378.

[1] Make sure that the plate or film has not by chance been put into the developing dish with its face downwards. If the emulsion has been exposed through the back, the image will be very slow in making its appearance; in this case the image is situated mainly in the emulsion next to the support and does not develop to such a great extent in the outer layer. If the layer of gelatine has not become swollen in the developer it has been greased, either to prevent development by an operator unaware of the fact (espionage), or for its sensitizing for ultra-violet. The emulsion must then be cleaned with acetone.

unsuitable filter[1]; or a very little diffused light is penetrating to the inside of the dark-room. In these cases the sensitive surface in the shadow cast by the sides of the dish remains clear of fog. In the case of a developer containing hydroquinone, the fog may be due to oxidation of the developer as a result of too prolonged withdrawals of the negative for examination (§ 339). These failures may be avoided by desensitizing.

Intense Ray-like Fog. Fog starting as a rule from one corner and throwing rays in different directions indicates leakage of light in the dark slide or its junction with the camera.[2]

Marginal Fog. Fog forming a black or dark grey border and alling off towards the centre sometimes occurs on plates or films which are very old or which have been kept under bad conditions.

Parts of the Plate do not Develop, or Develop only Slowly. The surface of the emulsion has not been fully covered by the developer, probably because too little solution has been used and this has not been well stirred; possibly, also, to the dish not being level.

Black Lines Covering the Whole or Part of the Plate. During the preparation for taking a photograph, or when carrying the camera, an image of the sun is formed on the sensitive surface by a tiny hole in the camera itself. This acts like a pinhole, and moves in all directions according to the movements of the camera. Parts of these lines may be reversed by solarization.

Spreading of the High-lights into the Image of Neighbouring Shadows. Use of sensitive material not protected against halation (§§ 231–238) for photographing very contrasty subjects.

Black Spots Irregularly Distributed over the Image. Black spots of various shapes and sizes may be due to specks of some substance which causes fog or accelerates development. These may fall on the surface as dust or as particles from the developer itself. (Dust arising from the friction of the shutter in an aluminium dark slide, magnesium from flashlight powder, clinging to the hair or clothing of the operator.) They may also be due to undissolved particles of the ingredients in an unfiltered developing solution (crystallization may also occur in a concentrated developer when the temperature falls too low). These spots sometimes have tails. which are usually vertical, when tank development has been employed. When dust has fallen on the surfaces before exposure to light, the black spots frequently have a transparent centre.[1]

Pseudo-reticulation. Dark lines somewhat like the meshes of a net have been caused in many cases by development in a bath which is not rocked or in a dish which contains only a small quantity of developer.

Edge and Streamer Markings. When development is done in a very shallow layer of solution in an unrocked dish, there are sometimes produced dark margins on the dense regions of the image and light margins on the adjacent lighter regions. This is due to diffusion exchanges between the active developing agent and the products of reaction. For the same reason, when vertical tank development is employed, light streamer markings, extending below the denser parts of the image, are produced.

Denser Bands Recurring Periodically in a Length of Film Developed on a Rack. These bands appear on the parts of the film opposite the end cross-bars of the frame. In these regions development is more rapid than in the vertical regions along which the products of the developing action stream. Special racks with circular end cross-pieces of large diameter render this defect less likely to occur.

Irregular Stream-lines, Darker or Lighter than the Rest of the Image. The developer was not perfectly mixed when plates or films were placed in it. It may not have been sufficiently mixed when a concentrated developer has been diluted, or when the solution has been prepared from various stock solutions.

Mottling. This defect is usually the result of curtailed development of a very much over-exposed negative, the developer being dilute or exhausted and insufficiently rocked.

White Spots. Several cases must be considered. Tiny areas bare of emulsion would result in completely transparent areas *before fixation*, and

[1] Cases have been noted in which fog appears when using a developing solution previously employed for panchromatic material. The sensitive layer during treatment becomes panchromatic due to the action of the sensitizing dye given up to the bath by the plates previously treated.

[2] On roll films, fog of irregular shape starting from the edges and penetrating more or less into the image, especially on the last exposures, is due to the film not being wound tightly enough when the camera was unloaded, the last turns not being protected by the flanges of the spool.

[1] Black or white spots may be due, in exceptional cases, to a local increase or decrease of sensitivity during manufacture, owing to the acidity or oxydoreduction equilibrium of the medium being modified by dust or cultures.

would be recognized after drying by the depressions in the film. This defect is extremely rare. White spots, which on great enlargement are found to have sharply-defined irregular edges, usually angular, are the shadows of dust deposited on the emulsion before exposure to light. Little white spots with sharply-defined edges, circular or oval in shape, are generally due to air bubbles preventing the developer from coming in contact with the emulsion; they frequently occur when the developer has been diluted with water taken from a high-pressure supply, or with water at a lower temperature than that of the dark-room and which, on being warmed, liberates some dissolved air. Air-bells adhering to the emulsion when the developer has not been poured uniformly on to the plate are usually of a sharply-defined rounded shape, but irregular. Lines of air bubbles are sometimes formed when development hangers or holders of films are used and are introduced suddenly into the developer.[1]

White or Clear Spots, Round or Irregular, with Graded Edges. These spots are generally due to splashes of water on the emulsion, or to condensation of moisture when camera, slides, or changing box have been in a very cold atmosphere, and are brought into a warm place. Similar circumstances sometimes produce mottled markings, or marks with a light marginal fringe. In tropical climates, spots arising from splashes sometimes have either a dark centre or a dark ring.

Finger-markings. Finger-markings appear white after contact of dry fingers with the surface of the emulsion (and even with the backs of the plates if the latter are piled together after contact). The slightest quantity of grease deposited on the emulsion prevents the penetration of the developer. Finger-markings will appear black if the surface of the emulsion has been touched with fingers soiled with developer, fixer, etc.

Black or White Lines. Lines, generally very fine and straight, are due to friction on the emulsion. The shutter of the dark slide may be bent; a sheath in a changing box may be bent, and thus rubs against the emulsion of the next plate; there may be abnormal resistance to the pulling over of films in a bent film pack; the guide rollers may be working badly in a roll-film camera, or it may be winding too tightly. Lines from these various causes are usually light on a dark ground and dark on a clear ground.[1]

Dark Tree-like Markings. Electric discharges on an emulsion leave black brush- or tree-like markings. This trouble is hardly ever met with except on films,[2] and only then in very dry weather (especially in frosty weather). It may be due to friction or merely to the unrolling of the spool.

The Image Appears as a Positive. An image which has been considerably over-exposed may appear as a positive, altogether or partially; in such cases it is usually fogged. An image which at first appeared as a negative may during development be converted into a positive by the action of light (white light or unsafe dark-room lighting); it seems in this case that the first negative image protects the underlying emulsion against fog; at the same time the sensitivity of the emulsion is decreased by the soluble bromide already set free by development. Delayed reversal may also result from very long development in an extremely dilute developer; the chemical fog of the unexposed regions becomes denser than the image itself. Finally, cases have been noted in which a very much under-exposed image develops directly as a positive, this reversal being favoured by an extremely short time of exposure; it seems in such cases that chemical fog is destroyed by an amount of light insufficient to produce an image.

Double Images: Ghosts. The superposition of two entirely different images is obviously caused by two exposures on the same plate or on the same part of a film. Very curious effects are

[1] The incompletely swollen gelatine of plates, films or papers which have been immersed in a solution and withdrawn from it within 30 seconds is very likely to take air bubbles with it on fresh immersion. A bubble which is hemispherical when trapped by the emulsion tends gradually to become spherical, so that its surface of contact with the emulsion diminishes during development; the white spots due to bubbles thus sometimes acquire a vignetted edge. In developers liable to give oxidation fog, the white spot may be surrounded by an opaque ring (J. I. Crabtree and C. E. Ives, 1925).

[1] These lines are not to be confused with the broad and very opaque bands with diffused edges which are due to the passage of light between the sections of the curtain shutter of a dark slide or changing box, nor with the broad black lines with shaded edges which start perpendicularly to one edge of the plate and end in a black disc (or vice versa). These latter are caused by the movement and subsequent stopping in front of the plate of a hole in the blind of a focal-plane shutter. (Such holes are often caused by burning of the rubber of the blind occasioned by the focussed image of the sun.)

[2] Very small marks have, however, been noted on plates. These marks, the structure of which is only visible after magnification to at least ten diameters, are due to the wiping of the glass sides of plates which have then been piled together.

sometimes caused, however, by the superposition of two exposures without moving the camera; the shutter may have been opened twice or it may have rebounded, or it may be that the sensitive surface has remained uncovered for some time, and a second image has been projected by means of a hole in the front of the camera (generally due to the loss of a screw from the lens mount); one of these images is always so faint that only persons dressed in light colours standing near during or after the exposure appear in it; such figures then appear as transparent ghosts. These effects are often attributed to supernatural causes.

Broad Transparent Shaded Mark, Starting from One Edge. A very large out-of-focus image of a finger, held in front of the lens during exposure, so that it obscures part of the field.

Broad Light Bands Parallel to One Side of the Plate. When a focal-plane shutter is used, the rapid passage of an opaque body in front of the lens cuts out the image (or reduces its density if only a portion of the lens aperture is masked) on the parts of the plate which happen at that instant to be uncovered by the slit of the shutter. This is frequently met with in photographs taken from aeroplanes with the camera pointing across the propeller.

432. Defects Appearing After Fixing. *Milky Markings with Diffused Edges, visible on the Back of the Negative or by Transmitted Light.* Fixation has been stopped too soon, and has left patches of silver bromide between the image and the support.

Transparent Marks of Irregular Shape and with Diffused Edges. Local solution of metallic silver in an old fixing bath, which contains particles of rust, or in any fixing solution containing particles of potassium ferricyanide or other reagents capable of attacking silver. A clear mark may be produced by the prolonged action of a crystal of undissolved hyposulphite on a given tiny part of the emulsion.

Blisters. Blisters may be caused, particularly on films and papers, by bubbles of gas, which, instead of being liberated at the surface, are formed within the gelatine itself or between the latter and the support (immediate use of water delivered at too great a pressure; transference without intermediate rinsing from a developing solution containing carbonate to a very acid, non-hardening, tepid fixing bath).

Yellow or Brown Stain, Local or General. General stain may be due to the staining action of products of development on the gelatine. This occurs if the developer is old and highly-coloured, or if it contains insufficient sulphite. Stains in patches may be caused, especially with films and papers, on portions of the surface which during the first few moments of fixation have not been immersed in the solution. Solutions of alum, sometimes proposed for the removal of these stains, are quite useless, but the stains may be destroyed as follows: After washing the negative, immerse it for about 5 minutes in a solution of 5 per cent chrome alum, in order to complete the hardening of the gelatine and to avoid any softening during the further treatment, and then rinse it rapidly. The image is then bleached in a mixture of equal volumes of the following solutions (A) and (B), which should be mixed fresh when required—

(A)	Permanganate of potash . .	45 gr. (5 gr.)
	Water, to make	20 oz. (1,000 c.c.)
(B)	Hydrochloric acid . . .	1 oz. (50 c.c.)
	Water, to make	20 oz. (1,000 c.c.)

After the image has been bleached it has a general brown colouration due to manganese oxide deposited in the gelatine. The negative is rinsed and is placed in a 5 or 10 per cent solution of bisulphite of soda until the brown colour has disappeared. The image is then blackened by treating it in an ordinary developer in full white light until no more white silver chloride remains visible through the back. Finally, wash the negative in two or three changes of water without fixing. The above treatment may be applied to a negative even if it has been dried.[1]

433. Dichroic Fog. The fog generally known as dichroic, although it does not always show two complementary colours, most commonly appears greenish-yellow by reflected light, and pink or purplish by transmitted light. It consists of ultra-microscopic particles of silver (colloidal silver) formed when silver bromide is subjected simultaneously to the action of one of its solvents, and to that of a developer capable of reducing silver salts *in situ* as soon as these salts are dissolved.

[1] The same acidified solution of permanganate or one which has been acidified with sulphuric acid may be used *to remove developer stains from fingers* or linen; the process is completed by washing first in a solution of bisulphite and then in pure water.

The conditions necessary for the formation of dichroic fog may thus prevail during development and also during fixation. The milky appearance (by reflected light) of this fog often leads, in the dim light of the dark-room, to its being mistaken for a residue of undissolved silver bromide.

Dichroic fog hardly ever occurs during development, except in the under-exposed portions of a negative where there is no silver reduced in its ordinary black condition,[1] and when development is prolonged in the empty hope of bringing up detail which the light has not registered or when slow-acting developers like hydroquinone or glycin are used.[2] The solvent causing its formation may be hypo-sulphite of soda accidentally introduced into the developer, or it may be ammonia added as such or as an ammonium salt,[3] or it may be sulphite of soda used in excessive amount.[4]

If formed during fixation, dichroic fog may extend over the whole or part of the negative without any relation between its distribution and that of the image; its formation is due to developer carried over into the fixing bath by the gelatine of the negatives. A neutral fixing bath favours its formation because in such a solution the developer retains its activity until it has become diffused into the bulk of the solution; a very old fixing bath also favours its production, because of the accumulation of developer in it.[5] In all cases the presence of ammonia or of ammonium salts, and the exposure of the plate to light before fixation is complete are circumstances favourable to the appearance of dichroic fog.

The occurrence of dichroic fog during fixation is almost certainly avoided by rinsing negatives between development and fixation, especially if the rinsing is done in slightly acidulated water.

The only practical reagent known to dissolve this colloidal silver[1] without attacking the image —that recommended by J. Hauff in 1894—was, for several years—

Sulpho-urea (thiocarbamide)[2] . .	35 gr. (2 grm.)
Citric acid	18 gr. (1 grm.)
Water, to make	4 oz. (100 c.c.)

As the outcome of an experimental study of this trouble, Lumière and Seyewetz (1903) recommended bathing the negative for 5 minutes in a 0.1 per cent neutral solution of potassium permanganate; after rinsing, the negative is placed in a solution of 5 per cent to 10 per cent bisulphite of soda, in which the silver oxide formed by the action of the permanganate and also the brown colour of manganese dioxide formed in the gelatine disappear. The process is finished by washing in two or three changes of water.

434. Defects Occurring During Washing. *Reticulation.* The reticulation of gelatine, giving it the appearance of grained leather or crocodile skin, is due to the excessive swelling which may arise from various causes. One is transfer from a very concentrated or warm fixing bath into cold water, especially if the fixing bath contains no alum. Another is a considerable difference in temperature, one way or the other, between the developer and the fixing bath. In general, reticulation is liable to be caused by any circumstance tending to cause very rapid swelling or shrinkage of the gelatine, such as transfer from a very alkaline bath to one which is strongly acid, or inversely. When the reticulation is not very marked, it is sometimes possible to remedy it by placing the negative in alcohol (with films, at least 20 per cent of water must be added to the alcohol), and then hardening it with alum, if necessary, before

[1] Where the silver is already reduced it plays the part of a nucleus on which is deposited silver, which, in the clear parts, forms in the colloidal condition.

[2] The presence of sulphate of soda in suitable concentration in the developer is usually sufficient to prevent formation of dichroic fog under conditions which in the absence of this substance would tend to produce it (L. Lobel, 1920); the sulphate of soda (like every other salt which may be added in large amounts without interfering with development) coagulates the colloidal silver as it forms.

[3] Traces of ammonia or of ammonium salts may be introduced into the developer by the emulsion itself (residual ammonia from the ripening process left after incomplete washing) or by its support when the latter consists of celluloid in which urea has been used as a stabilizer; this urea being converted into ammonium carbonate in the developer.

[4] Lüppo Cramer (1905), however, obtained dichroic fog in a developer containing only carbonate of soda and an amino developing agent, substances of this latter class behaving as feeble solvents of silver bromide.

[5] Dichroic fog can, however, be formed in a fresh acid fixing solution if two film negatives or paper prints adhere to one another during fixation, because in this way the free access of the fixer is prevented; the developer is thus in excess of the fixer, and so the ideal condition for the formation of colloidal silver is provided.

[1] Even intense dichroic fog, being due to a very small amount of silver, which would not be noticed if present in the ordinary photographic form of black silver, may be transformed into silver chloride (as described for removing developer stains) or into the bromide, and may then develop in the ordinary way.

[2] See § 535.

proceeding to any other operation.

Frilling of the Gelatine at the Edges. This defect, which starts as a kind of curling along the edges of the support, is due to the same causes as reticulation; the same methods may be tried in order to prevent it.

Transparent or Clear Spots of Irregular Shape. Local attack of the gelatine by liquefying bacteria during prolonged washing, particularly in warm weather.

435. **Defects Appearing During or After Drying.** *Partial Melting of the Gelatine leading to Irregular Deformation of the Image.* The negatives have been subjected to a temperature above the melting point of gelatine whilst in a wet and insufficiently hardened condition. They may have been placed too near a fire or in the direct rays of the sun.

Patches of Uneven Density. Local variations in the rate of drying due to changes of temperature, humidity, or speed of air currents. These patches may sometimes be got rid of by converting the image into silver chloride and re-developing as described in § 432 for removing developer stains.

Light Spots or Marks with Dark Edges. These marks are caused by drops of water left on the face of the gelatine during drying, or which have been splashed on to its surface after it has already dried. In course of drying these splashes dry first at the edges of the moist region and causes the particles of silver to be dragged from the centre towards the edge. Re-wetting of the negative, followed by normal drying, does not always provide a remedy for this.

Clear Spots of Bare Glass or Film. Local liquefaction of the gelatine by colonies of bacteria during very slow drying in a warm, moist atmosphere. Clear, irregular spots may be due to the attack of various insects on the gelatine.

Metallic Stains on the Edges of the Negative. Opaque fog of a lustrous metallic appearance, generally seen only on the edges of the negative, may be due to the use of an exhausted developer with old emulsions, or to a superficial sulphiding of the silver by sulphuretted hydrogen (often present in the atmosphere of industrial towns). It may usually be removed by dry rubbing with chamois leather; in obstinate cases, moisten the leather with methylated spirit in order to increase the friction, but in any case rub very lightly.

Traces of Foreign Matter Embedded in the Gelatine. Dust, particles of fibre, etc., deposited by the washing water and not removed by a final rinse in filtered water, or deposited during drying.

Distorted Films. A film which has been dried too rapidly (in too dry and warm air), under excessive tension, is often waved at the edges. The remedy consists in washing until the gelatine is uniformly swollen, and then drying under normal conditions.

White, Granular Deposit. This deposit, which is quite distinctly rough to the touch, is caused by the deposition of lime salts from a very hard water when no final rinsing in soft water has been employed. It may be removed by washing in slightly acidified water (1 per cent hydrochloric or acetic acid is suitable, but non-volatile acids must not be used) and again drying.[1]

White, Powdery Deposit. This is usually caused by aluminium sulphite deposited in or on the gelatine from an acid-alum fixing bath in which too much of the acid has been neutralized. It may be removed by a few minutes' immersion in a solution of carbonate of soda (about 10 per cent) followed by washing in clean water.

Yellowish-white Opalescence. This veil is generally due to the deposition of sulphur in the gelatine caused by the acidification of a fixing bath containing insufficient sulphite, or by the use of an acid fixing bath at too high a temperature, or by treating the negative with alum before or after fixation without intermediate rinsing. The only possibility of dissolving this sulphur without affecting the image is, after thoroughly hardening the gelatine, to try to convert it into hyposulphite of soda in a warm solution of sulphite (10 per cent solution of anhydrous sulphite of soda, warmed to about 110° F.), in which it is allowed to remain for some minutes. The process is finished by washing in several changes of water. The treatment is not successful with old negatives.

Silvery-white Opalescence which is Yellow by Transmitted Light. This variety of white deposit, covering all or part of the image, and particularly parts which have been dried too rapidly (edges), is caused by too rapid dehydration of the gelatine by concentrated alcohol

[1] A white veil, localized or not, of branching appearance, may be due to drying the negative while it still contains an appreciable amount of soluble salts (insufficient washing), and it may then be got rid of by simple washing in water.

(neat methylated spirit), especially if the negative has been washed in very hard water. It may be removed by washing in slightly acidified water (see " White Granular Deposit "), which method may also be employed as a preventive.

436. Defects Occurring in a Negative After Drying. *Ink Marks or Stains of Aniline Dyes.* Black ink stains (indian ink excepted) or coloured stains arising from dyes or any coloured substance (including dust from a copying pencil) disappear entirely under the treatment described in § 432 for developer stain.

Brown or Black Stain Due to Silver Nitrate. In printing with print-out papers which contain soluble salts of silver, a splash of water on the negative or the paper causes a transference of a little silver nitrate from the paper to the gelatine of the negative. This silver nitrate is gradually reduced under the influence of light, and gives a brown or black mark. This stain is composed of silver in a considerably finer state of division than that of the silver in the image itself, and, as a rule, may be removed, without appreciable weakening of the image, if the negative is treated with one of the weak silver solvents employed for destroying dichroic fog (§ 433).

Brown Stains. Brown stains may appear on a negative after the lapse of time ranging from some weeks to several years (more rapidly in a moist atmosphere). This is due to the slow conversion into silver sulphide of silver hypo-sulphite left in the negative after incomplete fixation or washing (in the latter case there is often a general weakening of the image in the region of the stain). There is no certain method of removing this kind of stain; it is often better to make a new negative from a print taken before the defect arose, or to make, first, a positive transparency (§ 570) on a panchromatic plate through a deep orange screen, and then a fresh negative from that. The effect of the stain is thus greatly reduced.

Scratches. The effect of various fine markings, produced by friction, may be reduced by varnishing the negative (§ 477).

Cracked Negative. A cracked negative, of which the gelatine film is intact, may be saved by stripping the film to another support (§ 482), provided that the broken glass is at once made good. This may be carried out very simply as follows: Take an old, waste negative, and dip it in water for a very short time, so that the gelatine does not swell appreciably, then slide the back of the cracked negative gently on to the moist gelatine so prepared. The very thin film of water interposed is absorbed by the gelatine and perfect adhesion of the two negatives is then assured on account of atmospheric pressure.

The Gelatine Film Scales Off or Becomes Powdery. This has frequently been noted with old negatives which have been hardened with formaline.

CHAPTER XXXIII

REVERSAL PROCESSES: METHODS FOR OBTAINING DIRECT POSITIVES

437. General Considerations. We will first mention a method which cannot, properly, be considered as a reversal process, but which is sometimes employed for obtaining positive images directly. By developing so as to obtain silver, which is whitish by reflected light, and employing plates in which the emulsion is coated on a black or very dark support, the image appears as a positive. This method is chiefly used for making "ferrotypes," formerly known as tintypes.[1] An ordinary negative image on a transparent support may also be made to appear as a positive if the black reduced silver is converted into a white salt of silver, and the plate is then given a black backing.[2]

The methods of reversal, properly called, may be classified as follows[3]—

(*a*) By considerable over-exposure; the image is *solarized* (§ 204) and develops directly as a positive.[4]

(*b*) After normal development of a negative which has been normally exposed and has not been desensitized, only a part of the thickness of the emulsion will have been employed in obtaining the negative image; the remainder is still sensitive to light (although its sensitivity may have been reduced); it is therefore possible, by exposing the negative to light, to produce in this residue a latent positive image which will remain exist, although weakened, after dissolving out the silver of the negative image, and may be developed so as to give the final positive image (C. Drouillard, 1901).[1]

(*c*) It has been noticed (J. G. Capstaff, 1921) that, after dissolution of the first image, the speed of the remaining silver bromide varies considerably from one point to another, being the less at each point the more the quantity of silver dissolved there. As a matter of fact, the various grains of silver each have different speeds, and in each spot it is the fastest grains which, during the first exposure, are brought first into developable condition; thus there remains in the image of the shadows the majority of the most rapid grains, while the slowest grains alone remain in the image of the high-lights. A uniform exposure can therefore produce an effect practically identical to that of exposures, variable from one point to another, corresponding to printing a positive under a negative; what happens is almost as if the second exposure to light be made under the first (negative) image, although the latter has been removed. Development and fixation are then proceeded with, just as with an image obtained under ordinary conditions.

(*d*) In a negative which has been developed but not fixed there exist two images. These are complementary to one another, but generally of very unequal quality; one is the negative image, consisting of reduced silver, and the

[1] A variation of this method has been used by American military aviators (1925) in order to permit of the rapid examination of negatives taken during urgent reconnaissances. The support in this case is of blue-violet celluloid, appearing almost black by reflected light, but through which positive prints may be made. The image is negative for transmitted light although positive by reflection.

[2] This method is sometimes employed for printing from a very flat negative with which direct printing is impossible. The negative is bleached with mercuric chloride (§ 447), rinsed, dried, and mounted against a black ground. A copy can then be taken.

[3] A method of reversal, suggested by J. Waterhouse (1890) and which only gave very inconsistent results, consists in developing the image in a pyrogallol developer rendered alkaline by ammonia, containing no bromide, but with the addition of thio-urea or thio-carbamide. Regular results could be obtained in this way by keeping the developer at 53° F. (I.-G. Farbenindustrie, 1931).

[4] The exposure necessary for solarization can be considerably reduced if the emulsion has been subjected to the action of reagents producing an intense chemical fog. Films coated with such an emulsion (*Direkt-Duplikat*) have a speed comparable to that of emulsions for positive transparencies, and give by normal development fine grain images (H. Arens, J. Eggert, and E. Heisenberg, 1931).

[1] A variation of this method, involving the Sabattier effect (§ 204), does not require the dissolution of the first image before the second exposure. It has been described by F. Leiber (1932). After as full a development as possible of the first image in a bath of which the oxidation products do not produce a secondary image, the plate or film is rinsed several times and is exposed to light for a suitable time, and is then developed in a developer producing a secondary image (pyrogallol or hydroquinone without sulphite or with very little sulphite). After fixation the combination of the two superimposed images appears as a positive, well covered. All the silver in it is dissolved by means of Farmer's reducer (§ 459), for instance, and the secondary image is then intensified (§ 350, footnote).

other is a positive image, consisting of the residual silver bromide. Whilst dissolving the silver bromide (fixation) only leaves the negative image, the removal of the silver by a solvent having no action on the bromide leaves the positive image of which it suffices to bring the silver bromide to the state of metallic silver or of some compound of suitable colour (C. Russell, 1862).

438. We shall deal only with methods (*c*) and (*d*), the only ones in current use at present.

Reversal by a second, determined exposure (*c*) requires exact determination of the uniform exposure to be given (after dissolution of the first image) by preliminary tests on images taken under the same conditions as those to be treated. This method is only practicable in cinematography, in which case some pictures may always be taken from each scene. It is chiefly used for amateur films processed on continuous machines with a device for automatic adjustment of the exposing light according to the average amount of silver bromide remaining after the dissolution of the first image.[1]

Reversal by the "residue" method is better suited for treating individual images. Various means of augmenting its flexibility will be described.

It is obvious that reversal cannot be applied to plates or films coated with several superposed emulsions; the best results are generally obtained with sensitive material specially prepared for this treatment.

Whatever the working method employed, it is essential that the first development be thorough, for the undeveloped latent negative image would be superimposed on the positive image, being able even to cause a reversal in the image of the high-lights.

439. **Dissolution of the First Image.** The removal of the reduced silver is done preferably by means of an acid solution of permanganate (R. Namias, 1902), other silver solvents, and especially those containing chromic acid or bichromates in acid solution, constituting much more energetic desensitizers,[2]

[1] This adjustment is effected by means of a thermo-electric couple sensitive to a beam of infra-red light transmitted by an image without affecting its emulsion; a relay postpones this adjustment until the image that has been measured appears in the exposing window.

[2] The presence of chlorides in the reversing bath (chlorides in the water used, or in one of the reagents) causes irregular precipitation of silver chloride on the reversed image, giving rise to fog or stains appearing after development. To avoid these troubles (which are, however, infrequent, as the traces of silver chloride thus formed are dissolved in the sulphite or bisulphite), the addition to the new bath of a very small quantity of silver nitrate (some drops of a 5 per cent solution of silver nitrate) has been suggested.

The reversing bath is made up when required by mixing equal volumes of the following stable solutions—

Potassium permanganate[1] . .	35 gr. (4 grm.)
Water, to make	20 oz. (1,000 c.c.)
Sulphuric acid, 66° Bé.[2] . . .	3¼ dr. (20 c.c.)
Water, to make	20 oz. (1,000 c.c.)

The plate (or film) is placed in this bath, and the dish is rocked until the silver forming the first image has completely disappeared. The solution must not have a temperature above 68° F., otherwise it may attack the gelatine. When the whole of the silver seems to be dissolved, the plate is quickly rinsed and is then placed in a solution containing 2 per cent to 5 per cent of bisulphite of soda, in order to dissolve the brown manganese dioxide which has been formed in the gelatine, and to restore a normal sensitivity to the silver bromide desensitized by the treatment with permanganate. If it is found that traces of the first image still remain it is necessary to repeat the operations.

Some workers, however, prefer to dissolve the image in a sulphuric solution of bichromate (1 per cent of potassium bichromate and 1 per cent of sulphuric acid, this latter being measured in volumes). The image thus reversed is, when finished, less contrasty than an image reversed with permanganate (C. Emmermann and K. Brandt, 1928). The bisulphite solution may then be replaced by a 5 per cent neutral sulphite solution.

[1] Potassium permanganate occurs as small crystals ($K_2Mn_2O_8$) which are dark violet in colour with reddish-brown sheen. The salt is not very soluble in cold water (6 per cent at 60° F.), but is very soluble in warm water; its solutions, which are violet, are so dark that it is hardly possible to see whether all of the salt has dissolved. The dry salt and its solutions are stable. Permanganate produces a brown stain on all organic materials; the stain is instantly decolourized by bisulphite of soda or hydrogen peroxide, or more slowly by oxalic acid. In making up permanganate solutions acidified with sulphuric acid, never pour the concentrated acid on the dry salt, as this causes an explosion.

[2] See § 364, footnote relating to the use of sulphuric acid and its replacement by the acid sulphate of soda. Acetic acid of twice the volume may be used instead of the sulphuric acid.

For reversal in hot climates, the use has been suggested (A. Seyewetz, 1929) of the solution of ceric sulphate specified (§ 461) as a reducer, this solution having the advantage of hardening the gelatine.

440. Reversal by a Second, Determined Exposure. This method of operation, which in fact is equivalent to making a positive copy (§ 437 (*c*)),[1] can produce a positive with pure whites whatever the amount of silver bromide available in the areas corresponding to the pure whites, if the uniform exposure,[2] given to the emulsion after dissolution of the silver and re-sensitization, is suitably chosen.

The average speed of the residual emulsion, always less than its original speed, is increased since the first development, owing to a shorter first exposure, has affected a smaller number of sensitive grains. The necessary exposure depends both on the extreme luminosities of the subject and on the conditions of the first exposure. In the case of a subject of which the extreme luminosities have a range of 32 to 1, a suitable choice of the second exposure enables positives to be obtained which are practically identical with values of the first exposure within a range of 16 to 1.

In the absence of an automatic regulator of the second exposure (J. G. Capstaff, 1927), or of an opportunity for taking a sample, it is possible to give at first an exposure that is decidedly insufficient and, after curtailed development, estimate from the character of the image the supplementary exposure required, which supplementary exposure can, furthermore, be given in several stages, each time after partial development of the preceding impression (V. B. Sease, 1931).

441. Reversal by Blackening the Residual Silver Bromide. Reversal by a "residue" method has the disadvantage that, as a rule, it gives, with ordinary plates and films, fogged images. That is because there is more silver bromide than is necessary to give a satisfactory negative and positive.

If, in order to obtain the final positive, all the silver bromide which has not been used to produce the first negative is developed, pure whites cannot be obtained unless in the image of the whites all the silver halide has been brought into developable condition during the first exposure and then developed. This exposure must therefore be longer as the sensitive emulsion has a greater weight of silver bromide per unit of surface. With a given emulsion the maximum speed can be obtained only by reducing the emulsion thickness to the minimum necessary to form the image of a normal subject. This method is therefore in current use only for thin specially prepared emulsions (plates and films with a mosaic trichrome screen for direct colour photography; reversible film for amateur cinematography; papers used in automatic portrait machines).[1] Contrary to the instructions given in the case of negatives fixed after development, the exposure must be regulated only according to the brightness of those high-lights of the subject that are to be represented in the final image by the lightest grey that can be differentiated from white.

The chief disadvantage of this method is the total lack of latitude in exposure and, indeed, the impossibility of rendering correctly, whatever the exposure, a subject of which the extreme luminosities slightly exceed the range permitted. Owing to the fact that the content of silver bromide per unit of surface has been reduced in order to enhance rapidity, contrast would, in fact, be reduced if a more contrasty emulsion were not used.

After dissolving the first image, clearing with a bath of bisulphite (§ 439) and rinsing, the residual silver bromide is placed in a developer in a weak light, or after a fairly ample exposure to light, or finally after it has been acted upon by a solution causing a very strong fog.[2] It can

[1] A contributory circumstance accentuates the local differences in speed of the residual silver halide: during the first development soluble bromide and iodide are formed and the latter reacts at once on the adjacent silver bromide, changing it superficially into silver iodide, which is much less rapid; this effect is obviously the more marked in a given point the greater the amount of the silver that has been reduced there (H. Baines, 1936).

[2] Exposure to light by the back surface should extend a little the range of luminosities that the sensitive layer can differentiate (F. Leiber, 1932). Exposure to light of a wet sensitive layer generally leaves traces of superficial trails of liquid; the surface to be exposed must therefore be squeezed off, or the exposure must be effected under a depth of still water.

[1] It has, however, been possible to obtain excellent results with sensitive materials prepared for other uses, especially with many positive papers, by prolonging *considerably* the duration of the first development of a slightly over-exposed image, 45 minutes for instance, for papers of which development normally requires scarcely 2 minutes (G. Schweitzer, 1935).

[2] To avoid the alternation of acid and alkaline solutions, which in warm weather may cause excessive swelling of the gelatine, the developer recommended by Pathé-Cinema for reversing "Baby" ciné film (1923) is a solution of hydrosulphite of soda acidified with bisulphite of soda.

also be treated with a solution reducing the silver halide, or by a solution of a sulphide[1] or by a sulphurizing mixture (§ 589).

To permit the use of thicker emulsions and then correct under-exposure, R. E. Liesegang (1925) proposed giving to the film, before development, an auxiliary exposure such that the sum of the intermediate image itself and the general fog so produced uses up the whole of the silver bromide of the emulsion in those regions corresponding with the high-lights. The amount of the auxiliary exposure is determined by systematic trials on images similar to those which are to be reversed.

442. Reversal by Means of Residual Silver Bromide of which the Excess is Dissolved to an Accurately Determined Degree. In the method of reversal by total blackening of the residual silver bromide the only correct exposure is that which allows the first development to reduce all the silver bromide in the image of the whites of the subject,[2] and only in the image of these whites. A shorter exposure would leave in these areas available silver bromide and would, therefore, represent the whites by a greater or less density of the final image. Such an under-exposure can be corrected after dissolving the silver of the first image by dissolving a certain amount of the residual silver bromide (J. G. Capstaff, 1923). The image is immersed for an accurately determined time in a dilute fixing solution, the operation being adjusted so that no silver bromide remains in the regions corresponding with the high-lights of the final image; the best conditions are determined by trials with images which are identical with those which are to be reversed.[3]

A variant of this method, which is really of older date, for it was specified in the instructions for treatment of the Autochrome plate (L. Lumière, 1906), consists in effecting the first development in a developer containing a solvent, usually ammonia,[1] but sometimes also hyposulphite, sulphocyanate or cyanide. A strong developer is used in which development is complete in about 2 minutes, after which prolongation of immersion in the bath merely eliminates gradually the silver halide, which according to the composition of the developer remains in solution or is deposited both on the plate and on the sides of the dish as metallic silver. The total blackening is thus progressively decreased, thus approximating to the maximum developable density, and thereby permitting pure whites to be obtained in the reversed image. It is understood that *in this particular case* under-exposure may be compensated by a prolongation of the time of development. The presence of the solvent is equivalent in some degree to an increase of the sensitivity of the emulsion, reckoned in terms of the final positive image (L. Lobel, J. Lefèvre, M. Dubois, and J. Vidal, 1927–28).

It must be remembered that, on account of reversal, the characteristics of the resultant image are, in case of faulty working, very different from those ordinarily arising from the same errors. Thus, fog in the first image results in weakness or absence of the final image. Insufficient density corresponds with over-exposure or over-development of the first image, whilst a very dark image, even in the "whites," corresponds with under-exposure or under-development of the intermediate image. It is preferable to use baths of which the formulae are recommended by the maker of the emulsion employed.

443. Various Other Methods. By means of the Herschel effect (§ 197) it is possible to obtain reversed images on transparency plates. The plate is uniformly fogged in white light and then exposed in red light under the negative to be copied. The time of exposure to red light can be much shortened by impregnating the emulsion with a desensitizing dye and potassium bromide after the uniform exposure to white light.

A. and L. Lumiere and A. Seyewetz (1911) suggested the following procedure: after reversing, washing, and prolonged exposure to light, dissolve the silver bromide and develop by the method of development after fixation (§ 396).

[1] It must be remembered that all work with sulphides must be done outside the dark-room and away from stores of sensitive materials.

[2] The density which can be obtained by the reduction of all the silver halide (total blackening) is always greater than that which can be obtained by development of the strongest possible light impression (solarization density). The difference between these two densities would represent, in the absence of the solvent, the final density of the high-lights (L. Lobel, 1927–1928).

[3] Results as good, if not better (F. Lapeyre, 1935) have been obtained on films for direct colour photography by treating the redeveloped image with a superficial reducer, the author of this method having a preference for the bichromate reducing bath (§ 439) diluted with 20 times its volume with water.

[1] A very small quantity of ammonia can have a considerable effect, for this reagent regenerates itself in proportion as the soluble compound formed is reduced by the developer.

When it is required to produce, not direct positives from original subjects, but negative copies of negatives (direct reproductions) or direct positives by printing from a positive transparency, very various methods may be employed. Their application presents no difficulty except, perhaps, from the industrial standpoint of the slowness of printing. Notable among these methods of printing are the dusting-on process, employing a coating of bichromated syrup (§ 678), as used also in making photographic enamels; the hydrotype methods, which make use of the differences of permeability of a layer of bichromated gelatine after exposure to light under a photographic image, so that certain colouring matters are fixed only by those parts of the layer which have been more or less protected against light-action, and in a way almost proportional to the density of the image used as original (§ 675); also diazotype (§ 693).

CHAPTER XXXIV

METHODS OF AFTER-TREATMENT: INTENSIFICATION, REDUCTION, WORKING-UP, RETOUCHING

444. General Considerations. Of the various corrective operations described in this chapter, intensification and reduction are purely chemical manipulations, whilst the others, retouching, etc. (including the local application of intensifiers and reducers), are processes requiring manual skill, and presuppose some artistic knowledge (ideas of values and ability to draw, knowledge of anatomy for those who are concerned with portrait retouching) and the mastery of a special technique (inversion of values). We propose to deal chiefly with chemical methods here, because retouching, properly called, cannot very well be taught from a book.

Under the name of intensification are included all processes which, after the negative has been made, allow of increasing the various densities of the image in such a way that the difference between the extreme densities is increased, as also is the contrast. On the other hand, reduction comprises all methods which allow of decreasing the different densities of a photographic image with or without decreasing the difference between extreme densities.

The operations of intensification and reduction were of great importance in days gone by, when negatives had to have almost the same range of densities in order to suit the few methods of printing which were then available, and, moreover, when the shadows in negatives had to be almost completely transparent lest the already long duration of printing in daylight became excessive.

The great variety in the characteristics of different sensitive materials now available allows of successful printing from negatives having widely different ranges of density. Thus, unless a given printing paper is chosen a priori, one may almost always avoid intensification or reduction of the negative. Whilst intensification, as suitably carried out on a negative which has been fixed with the precautions advised, is an operation which does not entail much risk, the same cannot be said for reduction, in which there is always an element of uncertainty, especially when it is applied to an already dried negative. Moreover, in the case of very dense negatives, such as result from long exposure and normal development, it is often better to confine oneself to using a more intense light for printing, or a longer time of exposure, rather than to risk the destruction of the scale of tones by reduction.[1]

In the case of a negative having a very great scientific or documentary value, it is usual to refrain, even in the most extreme cases, from all attempts at direct improvement. Instead, a positive transparency is made from the negative under the best possible conditions; on this positive any intensification or reducing which may be necessary is carried out, and then a reproduction, forming an improved duplicate of the original negative, is printed. By taking the precautions necessary to preserve the sharpness of the image in the course of successive printings, and by choosing for each one of the printings an appropriate method (§ 570), it is possible to obtain from a very mediocre negative, without any corrective operation whatever, a very satisfactory reproduction, in which the contrast is increased or diminished to the desired degree.[2]

(*a*) Intensification

445. Choice of Method of Intensification. The method which, unfortunately, is generally employed (bleaching the image in mercuric chloride and blackening with ammonia) has contributed not a little to the discredit of intensification; it destroys the details of the shadows and blocks up the high-lights; in addition, a negative intensified by this method is very unstable, the image gradually fading without the possibility of renewing it by any method whatever. Fortunately, it is very far from true to say that *all*

[1] The intensification or reduction of film negatives which have a coating of gelatine on the back often leads to local stains, which occur in the gelatine backing. They are due to insufficient washing. When this occurs the gelatine backing may be removed (§ 485).

[2] It has been suggested that negatives should be intensified by doubling them with a thin sheet of cellophane sensitized with diazo compounds, copied from the negative and developed dry. The same technique would decrease contrasts, giving the same effect as a proportional reduction, if the copy is made from a positive which has been printed by contact from the negative requiring correction (H. Rabel and F. Lichtenstein, 1929).

methods of intensification merit the reprobation which is rightly applied to that just cited.

The principal advantage of intensification is that it permits the contrast of a negative to be increased after it has been examined under better conditions than by the non-actinic light of the dark-room. Properly-conducted intensification may be made to give the same results as would have been obtained by prolonging development; it can even give better results, for example, when it is feared that, after a certain stage of development, fog may develop more rapidly than the image itself.

To be effective and certain, a method of intensification should increase proportionally the different densities of a negative, or at least it should not depart too far from this proportionality. For this reason, one should mistrust intensifiers which yield negatives which are "too clean"; the extreme clearness of the intensified negative shows that the fog has not been intensified and consequently the shadow tones also have not been increased, in spite of the fact that it is precisely these parts of the image which generally are in greatest need of intensification. The use of such an intensifier should therefore be confined solely to black and white subjects, that is to say, to copies of pen-and-ink drawings or similar originals.

It is essential that the intensified image should be no more unstable than the original negative. It is advantageous, lastly, if the intensified image can, if necessary, be further intensified or reduced at pleasure, if the optimum condition has been passed.

It may be added that the eye is a very bad judge of the effectiveness of a method of intensification, and that visual methods of photometry fail when the image is not quite neutral (L. P. Clerc, 1912). Thus, for example, the application to a photographic negative of one of the treatments, which will be described later under the name of "sulphide toning," gives an image which is less vigorous according to visual examination, but the effective contrast is augmented for printing purposes (A. H. Nietz and K. Huse, 1918).

We recommend the photographer who wishes to determine for himself the effectiveness of an intensifier to intensify half of a spare negative, and to print *separately* on the same paper the best possible print of each half, comparison being made on the prints.

446. In spite of the great variety in the methods of intensification, there are fairly narrow limits in the choice of a method giving the best result in a given case.

The amateur photographer will, as a rule, prefer methods by which intensification is brought about in a single operation (mercuric iodide intensifier), which makes control easier, or those methods which do not require the use of poisonous materials (chromium intensifier).

The physicist will prefer, in certain cases, the only method yielding exact proportionality between densities before and after intensification together with perfect stability of the image (negative bleached with mercuric chloride and then blackened with ferrous oxalate).

The maker of black and white reproductions has often no interest, indeed sometimes just the opposite, in preserving the tones of the negative,[1] especially when these tones are only due to slight spots or to inequalities of illumination of the original, and he is therefore only concerned with the increase of contrast; the negative, bleached in mercuric chloride, is blackened by ammonia if only moderate intensification is required and if the negative need not be preserved; or in silver cyanide, if considerable intensification is sought.

Lastly, those methods which give great intensification are specially useful in saving negives which have only a faint trace of image and which cannot be replaced under better conditions.

The use of mercury intensifiers is to be avoided for very small negatives which require considerable enlargement, because the graininess is often very much increased. A negative or positive which is to be preserved should not be treated with a salt of mercury unless subsequent treatment is given, which reduces the mercury to the metallic state, or to the state of sulphide; in any other case the image is certain to be destroyed after a more or less prolonged period.

447. Mercury Intensification in Two Successive Baths. When a negative, in which the image is almost wholly metallic silver, is treated in a solution of mercuric chloride,[2] the silver

[1] Veil or spots in the ground are, in this case, frequently removed before intensification by means of superficial reduction.

[2] Mercuric chloride, commonly known as *bichloride of mercury* or *corrosive sublimate*, is a colourless salt, crystallizing in needles, though it is generally sold in pieces of fibrous appearance. It is very dense (specific gravity 5·4), and is not very soluble in pure water (about 7 per cent at 60° F.); in warm water its solubility is greater. It is volatile and is carried over in the steam from a boiling solution. Its solubility is increased by the presence of acid or of ammonium chloride. It is very soluble in alcohol. Mercuric chloride, like all

is converted into a double mercurous-silver chloride,[1] a complex white salt having properties which are slightly different from those of a simple mixture of silver chloride and mercurous chloride or calomel. In this way the silver adds to itself about double its weight of mercury (200 parts of mercury to 108 parts of silver). At this stage of the operation there is exact proportionality between the original density and the new density, the latter being considerably less than the original density.

As a rule, a solution is used containing about 260 gr. of mercuric chloride and 50 minims of hydrochloric acid or nitric acid in 20 oz. (30 grm. mercuric chloride and 5 c.c. acid in 1,000 c.c.). Such a solution hardly deteriorates at all on keeping; used solutions may be kept for further use until the active substance is exhausted.

During the first few moments in the bath the image darkens, and by transmitted light shows a violet tint; it then gradually becomes white. For proportional intensification the treatment is continued until the image, when viewed from the back, is seen to be completely whitened. In the case of a hard negative in which it is desired to intensify the parts of least density, the action of the mercuric chloride may be interrupted before the heavier densities are completely bleached.

After it has been removed from the bleaching bath the negative must be washed in several changes of water before being darkened.[2] Similar careful washing must also be carried out after darkening by any of the processes now to be described.

448. *Darkening with Ammonia.* The image, bleached and washed as described above, turns brown and then black almost instantly when it is placed in a very dilute solution of ammonia (about $4\frac{3}{4}$ dr. of strong ammonia in 20 oz. of water, i.e. 30 c.c. per litre). The greater part of the silver chloride in the image is dissolved by the ammonia and takes with it an appreciable amount of the mercury, whilst the residual mercuric salt is converted into a black substance, which is very opaque but not very stable.[1] If the image fades after such intensification it cannot be regenerated.

The ammonia solution employed for blackening each negative must be thrown away after use.

As we have already noted, this method of intensification, which is not suitable for negatives in tone nor for those to be kept, reduces the clear tones (or at any rate does not intensify them) whilst it strengthens the heavy densities.[2]

Transfer from a very acid bath to an alkaline bath often causes numerous markings and sometimes reticulation of the gelatine; it has been recommended, in order to diminish the liability to these defects, to avoid all rubbing of the film during and after its treatment with ammonia, and to add alum (about 3 per cent) to the solution of mercuric chloride.

449. *Darkening with Sulphite of Soda.* A considerable improvement in the mercury intensification process is made by using sulphite of soda (C. Scolik, 1884) instead of ammonia for darkening the image.

The image darkens almost instantly in a solution of sulphite of soda; half of the silver is found in the darkened image, together with a quarter of the mercury which was associated with it, both metals being for the most part[3] reduced to the metallic condition (Chapman

other salts of mercury, is a poison which may be sold only by registered pharmacists; its solutions should not be allowed to touch the skin if the latter is broken. Mercury salts as a group attack many metals (gold, silver, copper, etc.), which are thus amalgamated. Aluminium is strongly attacked by it, yielding thread-like deposits of alumina. Solutions of mercury salts must not be allowed to touch any metals, especially jewellery, and for this reason rings must be taken off, and watches must not be touched by fingers moistened with these solutions. In the case of a neutral solution, a small amount of mercuric chloride is uniformly retained by the gelatine of negatives which have been bathed in it.

[1] The chemical reaction is represented by the equation

$$\underset{\text{Silver}}{Ag} + \underset{\text{Mercuric chloride}}{HgCl_2} = \underset{\text{Mercurous-silver chloride}}{AgHgCl_2}$$

[2] This washing should preferably be done with water slightly acidified with hydrochloric acid, in order to dissolve the mercuric chloride retained by the gelatine.

The layer of gelatine being often very rough after treatment with mercuric chloride, any friction on the image or by a strong jet of water can cause tears that after blackening show as pin-holes.

[1] The mercurous chloramide thus formed has the formula Hg_2H_2NCl.

[2] The optical density is multiplied by a factor varying from 1·4 to 1·7 in the denser parts of the image, the higher values of this factor corresponding generally with the use of a dilute solution of ammonia in which the negative has been allowed to remain for a time only sufficient just to blacken the image throughout its thickness.

[3] The presence of a small amount of silver chloride in the image can be demonstrated (as also in the case of images darkened by ammonia) by the fact that the densities are slightly decreased when the negative is placed in a solution of hyposulphite of soda.

Jones, 1894), whilst the other half of the silver and three-quarters of the mercury go into solution as complex sulphites. Secondary reactions also slowly occur between the metals in the image and in the solution, if the contact is maintained; there is a deposition of silver, which is to some extent added to the image, and to some extent replaces part of the mercury.

As a rule, a solution of about 5 per cent of anhydrous sulphite of soda (or 10 per cent of crystallized sulphite) is employed in a slightly acid condition; the acidification is effected by the addition of bisulphite of soda or of an acid. Solutions which have been used must be thrown away after treatment of each negative.

The intensification becomes a little more energetic if, instead of converting the image into the mercurous-silver chloride, it is converted into the corresponding bromide. This may be done by bleaching in a solution containing equal weights of mercuric chloride and potassium bromide (about 260 gr. of each salt dissolved separately in 10 oz. of water and then mixed, i.e. 30 grm. of each in 500 c.c. of water). In addition, some of the irregularities of intensification are diminished, due to the fact that silver bromide is much less soluble than the chloride in solutions of sulphite of soda.[1]

In either case the intensified image is quite stable.

450. *Darkening with Ferrous Oxalate.* By means of a ferrous oxalate developer (§ 346), an image which has been bleached in mercuric chloride is reduced completely to the metallic condition without exposure to light being necessary. This process is so exact that satisfactory photometric measurements may be made of the lower densities after intensification, the proportional factor for the increase of density being applied. If the gelatine is hardened and other suitable precautions are taken, including intermediate washing, the whole set of operations (bleaching and blackening) may be repeated as many times as desired, the densities and contrast increasing each time with exact proportionality.[2] The developer may be used several times over.

This method of intensification is only to be recommended for certain scientific applications of photography.

451. *Darkening with an Organic Developer.* Common developing solutions are capable of darkening images which have been bleached in mercuric chloride or bromide. Due to the chemical reducing action of the developer, the greater part of the metals which would be dissolved in solution of pure sulphite is reduced to the metallic condition, though the reduction is never complete. Amidol, whilst it is far from giving the greatest intensification, gives very satisfactory proportionality between the densities before and after intensification.[1]

Whatever the developing agent, each portion of the solution should be used once only.

452. *Various Other Methods of Darkening.* A great number of reagents have been suggested for darkening images bleached in mercuric chloride; hyposulphite gives only a negligible intensification, except for the accidental formation of sulphide which generally occurs as stains in the lighter parts of the image.[2] Sodium monosulphide is very largely employed for blackening intensified images on wet collodion plates, and in such circumstances gives excellent results; its application to gelatino-bromide plates is, however, dangerous, because of the intense fog which appears if a little of the mercuric chloride has been retained by the gelatine. Other solutions which may be mentioned as capable of giving strong intensification are as follows: a very dilute solution of caustic soda, to which formaline has been added (Blake-Smith, 1901), a solution of stannous tartrate prepared when required for use by dissolving a little stannous chloride in a dilute solution of tartaric acid (Hélain, 1901), and many other substances which are reducing agents in the chemical sense.

Special mention should be made of the process of darkening by means of silver cyanide (D. van Monckhoven, 1879), which is frequently used commercially in the copying of originals, since it reduces the lower densities (fog, etc.) at the same time that it increases the higher densities considerably. The darkening solution may be prepared by dissolving $\frac{1}{2}$ oz. of silver nitrate in about 10 oz. of water (25 grm. in 500 c.c.),

[1] Whilst, after bleaching in mercuric chloride, the factor of the increase of densities for an image darkened in sulphite ranges from 1·0 to 1·2 when one goes from low densities to high, these values increase to between 1·2 and 1·6 when the negative is bleached with mercuric *bromide* (or in a mixture of equivalent amounts of mercuric chloride and potassium bromide).

[2] The factor for growth of density is 1·45 for each intensification.

[1] The value of the proportional factor is about 1·18.

[2] There have been placed on the market, under the name of *magic photographs*, positive prints which have been bleached in mercuric chloride. When these are moistened with water and pressed into contact with paper which is impregnated with hyposulphite (supplied with the prints) the image reappears.

and adding in small quantities at a time a solution of 175 gr. of pure cyanide of sodium[1] or of potassium in about 4 oz. of water (20 grm. in 200 c.c.) until the precipitate first formed is almost entirely redissolved. The volume is then made up to 20 oz. (1,000 c.c.) with water. The solution may be used several times over.

453. Single-solution Mercuric-iodide Intensifier. Intensification in a single solution of mercuric iodide[2] was described in 1879 by B. J. Edwards. Since mercuric iodide (or bi-iodide of mercury, a very heavy red salt, generally supplied in the form of powder) is insoluble in water, this author proposed dissolving it in a mixture of potassium iodide and of hyposulphite of soda (in each of which it is separarely soluble). Later, it was found (Lumière and Seyewetz, 1899) that the use of sulphite instead of hyposulphite permits a slightly more vigorous intensification.[3]

The following baths are used—

	I *Edwards*	II *Lumière and Seyewetz*
Potassium iodide	180 gr. (20 grm.)	—
Soda sulphite, anhydrous	—	900 gr. (100 grm.)
Mercuric iodide	180 gr. (20 grm.)	90 gr. (10 grm.)
Hyposulphite of soda	180 gr. (20 grm.)	—
Water, to make	20 oz. (1,000 c.c.)	20 oz. (1,000 c.c.)

The first of these solutions contains no oxidizable product, and is more stable than the second. Both can be kept for a long time in the dark (earthenware bottles, or glass bottles covered with black paper). The solutions may be used many times, so long as they are kept away from light when not in actual use.

In these baths the image is intensified progressively without changing its appearance; the silver is converted into iodide, whilst at the same time metallic mercury is deposited on it.[4] The process is stopped when the desired degree of intensification has been obtained; the negative is then thoroughly washed.

The image intensified by method I is slightly more stable than that intensified by method II.

In moist air, though more slowly in dry, an image intensified in this way becomes yellowish (probably due to the formation of a complex of mercuric oxide and silver iodide). Absolute stability can be conferred on the image by placing the negative, after washing, in an ordinary developing bath, which reduces the silver iodide to metallic silver, or in a 1 per cent solution of sodium monosulphide (§ 589) which changes the two metals into sulphide without appreciably modifying the densities of the image.

A negative, which for the lack of these precautions has suffered this alteration of colour, may at any time be brought back to its original condition after intensification by treating it for a sufficient time with a developer or with the sulphide solution.

The action of this intensifier is not proportional (Nietz and Huse, 1918); the action is greatest with the lower densities,[1] which is a considerable advantage in most cases of practical interest, the shadow parts of a negative requiring more energetic intensification than the image of the high lights.[2]

Altogether the mercuric iodode intensifier is one of the most general usefulness. Especially for the purposes of Press photographers, who often need to give a little sparkle to negatives, it has the very great advantage that there is no need for the very long washing for removal of hypo which is required when using most other intensifiers. The possibility of a subsequent change in the negative is often a matter of no importance.

454. Chromium Intensification. About 1880 Eder suggested as a possible method of intensification the conversion of the silver of the photographic image into silver chloride by means of a solution of bichromate acidified with a little hydrochloric acid, and its re-development in a pyrogallol developer. In this way, in addition to the black image of the reduced silver, there is superimposed on it the brown image which is

[1] See note to § 398 concerning the poisonous actions of the cyanides. Solutions of cyanides should always be made up cold.

[2] See note to § 447 concerning the poisonous actions of mercury salts and their action on metals (jewellery, etc.).

[3] Whilst a negative which has been fixed in a fresh bath may be thus intensified after very brief washing, a yellow fog will result, due to precipitation of silver iodide, if the negative has been fixed in a bath containing much silver salt and is badly washed.

[4] It seems that the series of reactions occurring in this intensification process may be represented by the equations

$$\underset{\text{Mercuric iodide}}{2HgI_2} + \underset{\text{Silver}}{2\,Ag} = \underset{\text{Mercurous iodide}}{Hg_2I_2} + \underset{\text{Silver iodide}}{2AgI}$$

$$\underset{\text{Mercurous iodide}}{Hg_2I_2} + \underset{\text{Soda sulphite}}{2Na_2SO_3} = \underset{\text{Mercury}}{Hg} + \underset{\text{Mercuric iodide dissolved in the sulphite}}{HgI_2,\,2Na_2SO_3}.$$

[1] The lowest densities are approximately doubled, whilst the higher densities are multiplied by about 1·4.

[2] A single solution of mercuric sulphocyanide has been suggested as an intensifier (Andresen and Leupold, 1899), but, after intensification, the image tends to bleach if it is allowed to remain in the bath; this can, however, be remedied by treatment with a developer.

formed in the gelatine by the oxidation products of the pyrogallol.[1]

In experimenting with this process, which had been forgotten, C. Welborne Piper and D. J. Carnegie in 1904 found that the intensification was partly due to the deposition of a chromium compound (probably the oxide) in the image, the amount of this deposit being greater if the bleaching solution were only slightly acidified. The active agent in this intensification appeared to them to be a *chlorochromate* (produced by the action of hydrochloric acid on a bichromate), and they found that the silver chloride thus formed was developable without exposure to light, at any rate if the bleaching bath did not contain a great excess of hydrochloric acid; the latter, by being partially converted to chlorine, yielded ordinary silver chloride, which was only developable after exposure to light. For darkening they recommended the use of an amidol developer as lending itself best to the purpose of successive intensifications without causing frilling of the gelatine. The progressive increase of density by repeated intensification has been confirmed by photo-micrographs published in 1916 by W. T. P. Cunningham.

[1] R. B. Wilsey (1919) showed that intensification by means of pyro provides a means for increasing almost indefinitely the contrast of a negative while preserving very fair proportionality between the effective final and initial densities. This is done by successive bleachings and re-development of the image, using a pyrogallol developer containing only a small amount of sulphite—

BLEACHING

Potassium ferricyanide .	260 gr. (30 grm.)
Potassium bromide .	90 gr. (10 grm.)
Water, to make . .	20 oz. (1,000 c.c.)

RE-DEVELOPMENT

Soda sulphite, anhydrous	90 gr. (10 grm.)
Pyro	45 gr. (5 grm.)
Soda carbonate, anhydrous	90 gr. (10 grm.)
Water, to make . .	20 oz. (1,000 c.c.)

The bleaching bath keeps for a long time, even if used, but the re-development bath should be made up only in small quantities.

The factor for the increase of density and contrast has the following successive values in the case of a negative developed originally in metol-hydroquinone.

Number of intensifications	1	2	3	4	5
Factor . . .	1·70	2·10	2·40	2·65	2·80

On the other hand, a negative which has been developed in pyro (or intensified by the above method) may be reduced proportionally by bleaching it in a solution of permanganate acidified with hydrochloric acid (§ 432) and re-developing it in any developer which yields a black image.

It has been shown that the mixture of bichromate and hydrochloric acid may be replaced by a pure solution of a chlorochromate (Lumière and Seyewetz,[1] 1919), or by mixtures of chromic acid with a chloride (C. H. Bothamley 1918), or of a bromide (L. J. Bunel, 1923).

For the practical application of this method of intensification two stock solutions are prepared. These by themselves will keep indefinitely:

(*A*) 10 per cent solution of potassium bichromate.

(*B*) Ordinary hydrochloric acid diluted to ten times its volume with boiled water.

If it is required to obtain varying degrees of intensification, heavy, medium or slight, one of the following mixtures must be made up at the time required—[2]

The various operations in intensification must be carried out in weak daylight or in artificial light in order to avoid solarization of the silver chloride. The negative is allowed to remain in the bleaching bath until all traces of black image have disappeared when viewed from the back. Negatives should not be allowed to remain in this bath for a longer time than necessary, otherwise irregular markings may be produced.

Intensification	Strong	Medium	Slight
Solution A . . .	10	20	20
Solution B . . .	2	10	40
Boiled water, to make .	100	100	100

Negatives must be washed in several changes of water until the coloration of the gelatine has almost completely disappeared. The washing

[1] These authors consider that, on bleaching, only half of the silver is converted into developable silver chloride, the other half forming a double chromite of silver and potassium, a brown insoluble compound which would not be acted on by a developer. In this way may be explained the increasing brown coloration of images which have been successively intensified, as also the decreasing magnitude of the effect of re-repeated treatments.

[2] The effect of any of these mixtures, given here only as an approximate indication, varies very much with the nature of the emulsion on which the image is obtained. With some plates the solutions recommended for weak intensification give quite a heavy effect, and in such cases the amount of hydrochloric acid must be adjusted. The amount of acid prescribed for strong intensification may be very much too small if the water employed contains much calcium bicarbonate.

process may be considerably shortened by immersing the negatives, after rinsing, in a solution containing about 5 per cent of soda carbonate.

The image is then re-developed, preferably in a metol and hydroquinone[1] developer. In some developers the image comes up very rapidly at first and then appears not to change, though in reality it increases slowly for at least a quarter of an hour.

If the intensification is thought to be insufficient it may be repeated; there is, however, very little to be gained by intensifying more than twice.[2]

Images intensified in this way are quite permanent; their warm black tone renders the method very suitable for the intensification of lantern slides or paper prints, either for the purpose of intensification as such or, by slightly increasing the amount of acid, to improve the colour. It may be noted that this method of intensification, which does not make use of any poisonous substance, is extremely economical.[3]

The sensitometric measurements of Nietz and Huse (1918) have shown that, contrary to conclusions drawn from photometric measurements, the action of this intensifier is not proportional, but is greater in the least dense regions, a property which we have already seen to be very valuable.

455. Great Intensification with Copper and Silver. A method which has been used for a very long time, especially for collodion negatives, consists in treating the negative in a solution of cupric bromide in which the silver is converted into bromide and at the same time fixes an equivalent amount of cuprous bromide. The negative, after rinsing, is transferred to a solution of silver nitrate, some of which is reduced to metallic silver by the cuprous bromide; this silver is thus precipitated with an equivalent amount of silver bromide in the image along with the existing silver bromide. After washing, and reducing the silver bromide, the amount of silver is exactly three times that originally present (Abney, 1877). This method is not easily applicable to negatives made with gelatino-bromide emulsions; during washing, which is much slower than with collodion plates, the cuprous bromide is partially re-dissolved or re-oxidized and so escapes reaction.

The method has been improved by Luther and Schreiber (1923), and by G. Zelger (1924), by using in the first operation a solution which deposits in the image not cuprous bromide but a cuprous salt which is absolutely insoluble and non-oxidizable, such as cuprous sulphocyanide or cuprous iodide.

As before, the density is exactly trebled by intensification; it may be again trebled by repeating the process, and thus sufficient contrast may be obtained to print an image which exists as a mere ghost, as is sometimes obtained with films in which regression of the latent image has occurred.

The "bleaching" bath (which, as a matter of fact, gives a yellow image) is prepared by pouring solution (A) into solution (B)—

A	Copper sulphate, cryst .	22 gr. (5 grm.)
	Acetic acid, glacial .	2¼ dr. (28 c.c.)
	Water, to make . .	10 oz. (500 c.c.)
B	Potassium iodide . .	22 gr. (5 grm.)
	Ammonia (22° Baumé) .	7¼ dr. (46 c.c.)
	Water, to make . .	5 oz. (250 c.c.)

Heat is generated when the solutions are mixed, and the bath must not be used until cool. The mixed solution, which is clear blue in colour, should be slightly acid; if it is not, a little acetic acid must be added until blue litmus paper is faintly reddened by it; it is quite stable and may be used until exhausted.

The negative is immersed in it until the image becomes yellow throughout its thickness. After thorough washing it is blackened[1] in a solution containing 0·25 per cent of silver nitrate to which about 1 per cent of sodium acetate has been added (so preventing the copper nitrate formed

[1] In case the bichromate is incompletely eliminated (which is always possible even after prolonged washing) an amidol developer risks the formation of insoluble oxidation products resulting in the formation of red spots (W. A. Ermen, 1928).

[2] The factor of proportionality attains successively the following values in the case of several successive intensifications, re-development being effected in a metol-hydroquinone developer which is only very slightly alkaline (P. E. Boucher, 1935)—

Number of intensifications .	1	2	3
Factor	1·4	1·65	1·8

[3] The only objection which may be raised against this method of intensification is that it gives to the gelatine of some emulsions a granular structure which makes retouching difficult, though it does not show on printing either by contact or on enlarging.

[1] Before treatment with silver nitrate, the negative may be immersed in a saturated solution of alum, so preventing combination of silver nitrate with the gelatine.

during the reaction from attacking the silver).

The silver salts, other than silver iodide (chloride precipitated in the gelatine due to the use of ordinary water and silver nitrate combined with the gelatine), are removed by immersion for about two minutes in a bath containing about 1 per cent of ammonia, which has no action on silver iodide.

The process is completed by reducing the silver iodide to the metallic state by means of a solution of hydrosulphite of soda containing a little bisulphite of soda, or by means of an amidol developer made alkaline with carbonate of soda.

456. Other Methods of Intensification. The methods of intensification described in the preceding paragraphs are amply sufficient for all practical requirements, so that we shall be content to mention only briefly some others which are sometimes used, or which are in themselves curious because of the means employed.

Intensification by precipitation of silver according to the method already described for physical development before or after fixing (§§ 395 and 396) is especially suitable for fine-grained images. It is often an advantage to precede this process by immersion in a very dilute solution of permanganate acidified with sulphuric acid (the reversal bath described in § 439 diluted twenty or fifty times with water), and to follow it by treatment with hyposulphite of soda. (This method of intensification may be carried out *before* fixation.)

Various methods which will later be described under methods of toning may be employed for intensification (uranium toning, quinone toning, and dye-toning with a mordant).

A method giving great intensification but requiring rather delicate manipulation has been described by K. Hickman and W. Weyerts (1933): a sulphide toned image (§§ 588 and 589) is placed in a solution of silver sulphite and, under the action of a strong artificial light, it progressively becomes intensified by deposition of silver. After intensification to the desired degree the image is rinsed, placed in a fixing bath and washed.

It has been suggested that a negative may be intensified by "doubling" the image in "carbon" on the gelatine of the negative by the Carbro process, or by an image obtained by dusting-on, the sensitive layer (bichromated glue) being coated on the gelatine face of the negative, which has been previously varnished. Lastly, it has been suggested that an image may be intensified by contraction of the film after detaching it from its support.

(*b*) Reduction

457. Choice of a Reducer. The usual reducers act by gradually dissolving the silver which forms the photographic image, but widely different results are obtained according to the substance (or mixture of substances) which is used for this purpose.

Uniformity of action of a reducer is obviously only possible if it can penetrate to all parts of the image at the same speed; in the case of a dry negative, however, and particularly if fixation has been done in a bath containing alum, the permeability of the gelatine is often very different in the various parts of the image, and thus there is a great risk that the process of reduction will produce markings which cannot be removed.[1] If, therefore, reduction has not been carried out before drying the negative, the latter should be soaked in water until the gelatine has swollen uniformly, which will sometimes require three or four hours.

The characteristics of a reducer depend largely on the dimensions of the grains forming the image, and on the distribution of these grains in the depth of the layer, hence there are considerable variations in effect according to the type of emulsion, and even with negatives of a given emulsion developed under very different conditions.[2]

The various reducers may be schematically classified into three groups—

1. Surface reducers.
2. Proportional reducers.
3. Superproportional reducers.

Superficial reducers are very active solvents of silver. They attack the silver almost as fast as they penetrate the film of gelatine, so that the

[1] Traces of grease on the negative (finger-marks, etc.), even though they do not prevent the swelling of the gelatine, cause the reducer to penetrate more slowly, and so cause trouble. Where necessary, these traces of grease must be removed by cleaning with pure benzine or petroleum spirit. The addition of wetting agents (§ 369) can facilitate the uniform penetration of the reducer.

[2] Differences have been noticed in a given negative in the reduction of areas of equal density produced by different rays, or corresponding to latent images of different ages at the moment of development (C. Jausseran, 1933).

different densities in the image are decreased by approximately the same amount (Fig. 176, I), and if the action is allowed to go on too long some parts of the image may disappear altogether. These reducers are specially suited to the clearing of fogged negatives. They are generally chosen for local reducers in retouching so as not to tire the patience of the operator.

A *proportional reducer* decreases every density in the image in the same proportion. This may be brought about by converting the silver of the image into a less absorbing substance or

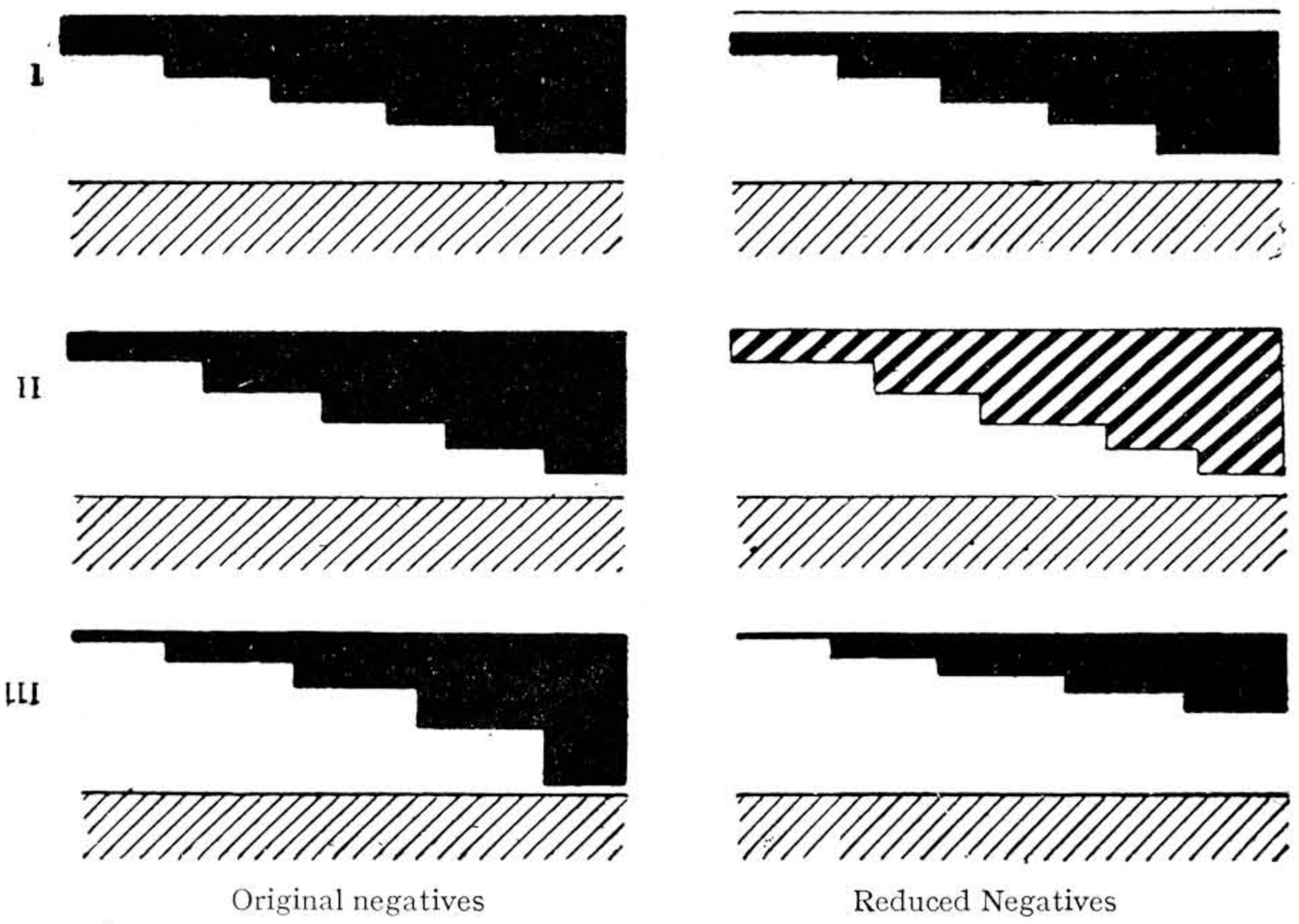

FIG. 176. TYPES OF REDUCER
I, Surface; II, Proportional III, Super-proportional

mixture of substances (Fig. 176, II), e.g. by blue toning (L. P. Clerc, 1899) or by iodizing the image. The removal of the same fraction of the quantity of silver at every point of the image is never realized except, approximately, by the use of solvents whose action is so slow as to be negligible during the time taken to penetrate the film of gelatine. These reducers are most suitable for diminishing the contrasts of negatives which have been over-developed.

A *superproportional reducer* removes a greater proportion of the silver from the dense parts of a negative than from the lighter parts, as if its action started from the support of the film and moved outwards towards the surface of the gelatine (Fig. 176, III). The only reducer known to belong to this group is ammonium persulphate; it dissolves silver slowly, and its activity is increased by the silver sulphate produced in the course of the reaction (autocatalytic reaction).

Lastly, in certain cases, it is required to reduce only the dense parts of the negative. This may be done indirectly by allowing the solvent of silver to act only after all the silver contained in the surface layers of the film has been converted into an insoluble compound.

In using any of the reducers of the first three groups, the negative should always be withdrawn from the bath a short time before the desired effect has been produced, because the solution of the silver continues during the first moments of washing.

458. **Surface Reducers.** Whichever of the reducers of this class may be used, anything which tends to increase the rate of solution of the silver (increase in concentration of the active substance) or to diminish the velocity of penetration into the gelatine (excessive swelling of the film, thickening of the liquid, etc.) exaggerates the peculiar character of this class of reducer. The converse tends to make these reducers behave in a proportional manner.

The concentrations recommended later are averages which may be increased or diminished as desired. It must, however, be borne in mind that the use of comparatively highly-concentrated reducers renders control difficult unless a glass dish, illuminated from below, is employed.

459. **Farmer's Reducer.** The oldest known of the surface reducers (H. Farmer, 1884) is a mixture (prepared when required for use) of a solution of potassium ferricyanide[1] with a solution of hyposulphite. In this very unstable mixture, which generally loses its activity (re-

[1] Potassium ferricyanide, sometimes still called "red prussiate of potash," occurs in crystals of intense red colour having the formula $K_6Fe_2(CN)_{12}$. The crystals are often covered with an ochre-like layer due to exposure to the air; this should be washed off before a solution is prepared. The salt is very soluble in water (solutions up to 30 per cent may be prepared in the cold); its concentrated solutions have a yellowish brown colour, whilst dilute solutions are greenish yellow. These solutions are unstable, especially in light, becoming partially converted into ferrocyanide. For this reason large quantities should not be dissolved at one time, although for use as a reducer its solutions may be stabilized by means of sodium chloride (kitchen salt) added in amount double that of the ferricyanide. The salt is generally considered not to be poisonous.

cognized by the decoloration) in a time varying from a few minutes (mixture of highly concentrated solutions) to a few hours (mixture of very dilute solutions), the ferricyanide controls the activity of the mixture, the concentration of hyposulphite being always sufficient to give rapid solution of the silver salt which is formed.

Practised workers, in judging how to mix the two stock solutions, are guided by the depth of colour of the mixture. At first it will be suitable to mix in equal volumes a 1 per cent solution of potassium ferricyanide and a 10 per cent solution of sodium hyposulphite.

By making the mixture alkaline with a little carbonate of soda (Stürenberg, 1903) or with ammonia (R. Namias, 1910) it will retain its activity considerably longer and its rate of attack on the silver will be retarded a little; at the same time the somewhat persistent coloration of the gelatine by the ferricyanide will be prevented.

In order to avoid irregular action, the dish must be rocked during the whole process of reduction. The negative must be rinsed every time it is taken out of the bath for purposes of examination, otherwise streaks of lighter density may occur.

As a solvent of the silver ferrocyanide, the hyposulphite may be replaced by cyanides (*poisonous*) or by the alkaline sulphocyanates (§398); the mixtures thus formed are very stable.

460. Permanganate Reducer. A very dilute, acidified solution of permanganate (R. Namias, 1899) behaves as a reducer. It is very economical and its action is not quite so entirely superficial as that of Farmer's solution.

Starting from the same solutions already prescribed (§ 440) for the preparation of reversing solution, the following mixture is made up when required—

Potassium permanganate, 0·4% solution	30 to 50 min. (3 to 5 c.c.)
Sulphuric acid, 2% solution	30 to 50 min. (3 to 5 c.c.)
Water to make . .	2 oz. (100 c.c.)

Instead of the water, a 2 per cent solution of alum may be used in order to avoid the softening of the gelatine in warm weather.

The silver is dissolved in the form of sulphate; a part of this is precipitated as the chloride by the chlorides present in the water used for making up the solutions or in rinsing the negative. In addition the negative becomes brown due to the manganese dioxide formed in the partial reduction of the permanganate. Both of these substances may be removed by immersing the negative in a solution containing about 10 per cent of bisulphite of soda, followed by washing in several changes of water.

461. Other Surface Reducers. Of the many other reducers having practically identical properties, mention may be made of those which may be kept ready for use and which can be used several times.

The following may be included in this group: a mixture of ferric oxalate, sulphite of soda and hyposulphite of soda (Belitski, 1883), which is perfectly stable in the dark; [1] a solution of potassium bichromate acidified with sulphuric acid (90 gr. of bichromate and 1 drm. 36 minims of acid to 20 oz., i.e. 10 grm. and 10 c.c. respectively to 1,000 c.c.), which may be made up as a very concentrated stock solution (E. Gosselin, 1889); a solution obtained by adding to a solution of hyposulphite of soda a solution of cuprammonium sulphate which is prepared by adding ammonia to a solution of copper sulphate until the precipitate first formed is re-dissolved in a *large excess* of ammonia (Prunier and Mathet, 1892); lastly a solution containing about 5 per cent of cerium (ceric) sulphate (*poisonous*) acidified with sulphuric acid (Lumière and Seyewetz, 1900).[2]

462. Proportional Reducers. *Quinone Reducer.* The addition of sulphuric acid to the extent of about $3\frac{1}{4}$ drm. to 20 oz. (20 c.c. to 1,000 c.c.) to a saturated solution (0·5 per cent) of benzoquinone (ordinary quinone) furnishes a reducer (Lumière and Seyewetz, 1910) which has more recently been found (R. Luther, 1923) to act almost proportionally on the various

[1] A modified formula (J. I. Crabtree and L. E. Muheler, 1932) which remains active for about three days without special precautions, would appear to be the most perfect of superficial reducers, all the densities being decreased by the same value (E. L. Turner and W. J. Smith, 1935)—

Ferric chloride, cryst. . .	½ oz. (25 grm.)
Potassium citrate . . .	1½ oz. (75 grm.)
Soda sulphite, anhydrous .	260 gr. (30 grm.)
Citric acid	260 gr. (30 grm.)
Hyposulphite of soda, cryst. .	4 oz. (200 grm.)
Water, to make . . .	20 oz. (1,000 c.c.)

[2] We may also mention, but only to advise the avoidance of its use, the possibility of reducing a negative by a very dilute solution of hypochlorite of soda (*eau de javelle*), which acts mechanically by dissolving the gelatine, so removing the surface layers of silver.

densities. This solution, which is clear yellow, gradually turns brown, and finally gives a brown deposit. An image which has been reduced in this bath acquires a slightly reddish tint. It is necessary, after reducing and brief rinsing, to bathe the negative for some time in a solution containing about 10 per cent of bisulphite of soda before proceeding to the final washing.

Ferric Sulphate Reducer. A very dilute solution of a ferric salt which is quite free from chlorides and bromides (a condition which is generally satisfied by ferric ammonium alum which is a crystalline salt of pale rose violet colour) and which is acidified by a little sulphuric acid forms a reducer which is almost exactly proportional in its action and keeps well (H. Krause, 1919). The following solution may be employed: a 2 per cent solution of the salt in rain water or distilled water containing about 0·5 per cent of pure sulphuric acid. After rinsing, the negative is bathed for some time in a very dilute solution of sulphuric acid before the final washing.

Permanganate and Persulphate. A mixture in suitable proportions of the surface acid permanganate reducer with the superproportional persulphate reducer forms a reducing solution of intermediate character, the action of which is almost proportional (N. C. Deck, K. Huse and A. H. Nietz, 1916).

The bath must be prepared when required for use by mixing the following substances in the order given, each one being dissolved separately in a small amount of water—

Potassium permanganate .	1 gr. (0·10 grm.)
Sulphuric acid (1% solution)	1 oz. 1½ dr. (60 c.c.)
Ammonium persulphate .	90 gr. (10 grm.)
Water, to make . . .	20 oz. (1,000 c.c.)

The time required for reduction is from 2 to 5 minutes. The negative is then rinsed and bathed for 5 minutes in a solution containing about 10 per cent of bisulphite of soda before being washed in several changes of water.

463. Ammonium Persulphate Superproportional Reducer. The selective action of alkali persulphates on the higher densities of photographic images[1] was discovered in 1901 by A. and L. Lumière and A. Seyewetz, who specially recommended the use of ammonium persulphate.[1]

Persulphate converts silver into silver sulphate,[2] which, in proportion as it is formed, tends to accelerate the attack on the remaining silver. The presence of chlorides, which is practically inevitable, causes disturbance (E. Stenger and H. Heller, 1910) if the amount of sodium chloride is as much as 0·01 per cent: this is noticed as an exaggerated superproportionality[3] with a discontinuity in the reducer for a certain density; this value of density is raised by increasing the amount of chloride present (G. Higson; S. E. Sheppard, 1921). It will thus be understood that reduction by persulphate may be impossible with tap water which is relatively rich in chloride, such as may be found in some coastal districts.

The rate at which persulphate attacks the silver varies considerably with the acidity of the substance. The action is controlled by the addition of a trace of sulphuric acid or of a very small quantity of a silver salt (even of a small amount of an already-used solution) or of iron alum (Sheppard, 1918–1921); all these substances slightly diminish the risk of "poisoning" by chlorides.

[1] It must, however, be stated that with negatives which have been developed with paraminophenol (and only in this case) ammonium persulphate behaves sometimes as a surface reducer.

Various cases have been discovered in which reduction by persulphate is prevented or retarded by certain dyes adsorbed on the silver of the image during previous treatment (Lüppo Cramer, 1928).

[1] Ammonium persulphate is obtained in small colourless crystals having the composition $(NH_4)_2S_2O_8$. The substance readily absorbs moisture from the atmosphere and then becomes unstable. The salt should be stored in well-stoppered bottles. When a bottle of persulphate is opened a smell of ozone is often noticeable, this substance being formed together with the inactive sulphate when the salt is partially decomposed. Ammonium persulphate is very soluble in cold water (more than 30 per cent), but the solution is not very stable and it is advisable to prepare only a small amount of solution at a time (in presence of 20 per cent of sulphate of soda these solutions may be kept for several days without alteration); persulphates are at once decomposed by boiling water.

Potassium persulphate is much less soluble (1·7 per cent at 60° F.), but for this reason much easier to obtain pure. It may be used instead of ammonium persulphate for reduction of photographic images.

[2] $(NH_4)_2S_2O_8 + 2Ag = Ag_2SO_4 + (NH_4)_2SO_4$.
Ammon. persulphate Silver Silver sulphate Ammon. sulphate

[3] Certain reducers which, in the absence of chlorides, hardly ever behave in a way other than superficially, can, when a suitable amount of chloride or bromide is added to them, dissolve the silver of the high densities, whilst that of the low densities is converted into chloride or bromide.

The presence of chloride in a persulphate reducer shows itself by the formation in the bath of a slight white precipitate round the dense parts of the negative.

The reducing bath is prepared when required for use as follows—

Ammonium persulphate	.	17·5 to 45 gr. (2 to 5 grm.)
Sulphuric acid [1]	. .	1 gr. (0.1 grm.)
Water, to make	. .	2 oz. (100 c.c..

The reduction, which is comparatively slow at first, gradually gains in speed and may become too rapid. The action of the bath must be stopped a little before the desired effect has been attained; this is done by plunging the negative, without intermediate rinsing, in a solution of about 10 per cent of anhydrous sulphite of soda, which at the same time dissolves any traces of silver chloride formed in the film. The negative is then washed in several changes of water. [2]

464. Indirect Reduction of Heavier Densities. The image is treated in a bath containing about 2 per cent of potassium ferricyanide and 2 per cent of potassium bromide, in which it gradually bleaches. The operation is interrupted by washing in plenty of water a little before the higher densities have been completely bleached; the remaining silver is then dissolved in a solution of potassium permanganate acidified with *acetic* acid (R. Namias, 1911–1925) as already described in a note to § 439.

After dissolving the residual silver, the negative is washed thoroughly and is transferred to a solution containing about 10 per cent of bisulphite of soda, which decolorizes the gelatine and dissolves the acetate and chloride of silver formed; it is then re-developed in any ordinary developer whilst exposed to weak light.

It is also possible to protect the greater part of the silver against the action of Farmer's reducer by transforming it into silver sulphide, or by toning it with gold or selenium. The silver can also be converted to bromide or chloride and re-developed superficially, the unreduced silver halide being dissolved in a fixing bath.

(*c*) Working-up

465. General Notes. By the term "working-up" is meant the various methods of correcting negatives by hand in such a way as to modify the relative printing values of certain areas of the image which have a simple outline. This may be done in order to remedy any irregularity arising from faulty working in making the negative; or it may be to improve the rendering, for example, by reducing the contrast, which is sometimes great, between sky and foreground in a landscape or between the lights and shadows of an interior photograph; or to obtain the details of the image of white clothing, or to subdue the too pronounced details of a background on a portrait negative or on the negative of a commercial subject.

In all the methods of working-up involving the application, with a brush, of an intensifier, a reducer, or a dye, it is an advantage to use liquids which are sufficiently dilute and to carry out the operation by successive applications of the same reagent. In this way the appearance of sharply-defined edges to the area treated may be avoided; such sharp edges, if they do occur, frequently do not coincide exactly with the outline which is intended to be followed. The edges of partial, successive treatments overlap one another to some extent, and give a graded effect which is much less obvious.

These operations are best carried out on a retouching desk, and if they have to be done as a matter of commercial routine the use of folding desks is to be avoided. These are by no means steady and do not give sufficient support to the forearm. The amateur may construct a luminous table by placing a strong piece of glass on two boxes. The under side of the glass must be covered with white tracing paper and may be illuminated by means of light diffused from an inclined sheet of white cardboard. The light may be supplied to the latter from a window or lamp which is screened by a blind from the view of the operator.

466. Local Intensification and Reduction with a Brush. In order to allow of control, it is necessary to choose methods which make use only of a single solution and which do not produce more than temporary coloration of the gelatine; thus the mercuric iodide intensifier and Farmer's reducer, [1] or one of their variants, are suitable.

The operation is preferably carried out on the wet negative, which has been well wiped. The negative is mounted horizontally and illumin-

[1] A solution of about 1 per cent of sulphuric acid may be made up (50 minims acid per 20 oz. of water). Then use 1½ drm. of this solution for 2 oz. of bath.

[2] The microscopic observations of J. I. Pigg (1904) and of W. Scheffer (1906), on tests carried out on identical pieces of the same scale of tones before and after reduction with persulphate, showed that the persulphate acts simultaneously throughout the thickness of the film and attacks the large grains first.

[1] If the cyanides of sodium or of potassium (dangerous poisons; see note § 398) are obtainable, they may be used with advantage in 4 per cent solution to replace

ated from below (for reducing a sky, it may, however, be held almost vertically, with the image of the sky at the bottom). In order to facilitate the adherence of the liquid to the gelatine and to prevent its excessive diffusion on to neighbouring regions, its viscosity may be increased by dissolving sugar or by substituting glycerine or glycol for a part of the water in the mixture. In the case of reduction, the negative must be rinsed between each application.

467. Local Tinting of the Gelatine. Working up may be done by the additive method of tinting those parts of the negative which are too clear, or by the subtractive method of uniformly tinting the gelatine and then decolorizing it in those parts of the negative which are too deep. Which method is preferable depends on the relative areas of the parts which are required to be tinted and to be left plain.

For *additive tinting* one chooses an aqueous solution of a dye which is absorbed by the gelatine but is not fixed by it, and which may therefore be completely removed by washing in cases where it is desired to obtain the negative again in its original condition. Of the substances complying with these conditions are notably *new coccine*, giving a poppy-red colour (F. Schmidt, 1913), and *tartrazine*, a lemon-yellow dye. The first trial applications should be made very carefully, only experience being able to teach the effect of a given intensity of colouring, red or yellow.

At the start a comparatively concentrated stock solution of one or other of the dyes is prepared, and from this stock solution are made up two solutions for use; one of these is so dilute that a single application by means of a brush on a transparent part of the gelatine produces only a very weak coloration which can hardly be seen; the other is about five times more concentrated. The colour is applied with a sable brush No. 2 or No. 3 for very small surfaces, No. 4 to No. 8 for large surfaces, according to the size of the negatives.

The brush, soaked in the diluted solution and well wiped, is moved over the parts to be tinted without breaking contact between the brush and the gelatine until all the liquid has been absorbed. The brush is re-charged and wiped, and the process continued, returning as often as necessary to the same parts, and, if necessary, allowing the gelatine to dry when it becomes saturated with water. It is only by the superposition of a great number of very thin layers that perfect uniformity is obtained, and slight errors of outline are made negligible. The more concentrated solution is only used when a certain amount of skill has been acquired, and even then only to obtain very intense tints; in any case it is as well to prepare the film by at least one treatment with the diluted solution.

For *subtractive tinting* a uniform yellowish-brown coating is produced by bathing the negative for some time in a solution of potassium permanganate containing 9 gr. per 20 oz. (1 grm. per litre), without any addition of acid. After the negative has been rinsed and dried, local decolorization is carried out by means of a dilute solution of bisulphite of soda (e.g. 5 parts of the commercial solution diluted to 100 parts), thickened with glycerine or gum arabic (R. Namias, 1914). When the work is finished, the negative must be washed in a strong stream of water or by shaking it vigorously in a large dish of water.

468. Local Abrasion of the Negative. In order to diminish the density of small areas of the image, the surface of the gelatine may be rubbed down by means of the finger or a piece of wash-leather with a little powdered pumice or powdered cuttle-fish bone; if a less vigorous treatment is required, the rubbing may be done with a wad of flannel or a skin stump soaked with metal-polish, or merely moistened with alcohol.[1]

469. Work on the Back of the Negative. A little carmine (moist water-colour) may be applied with the finger to the back of a glass negative, so as to cover uniformly those parts which are to be blocked out; the boundaries of these parts may be overstepped, and in such cases the excess may be removed with a moist duster, followed by a moistened brush. Printing must be carried out in diffused light, so that the

the solution of hyposulphite of soda in this reducer. A stable mixture is thus obtained which does not leave the slight yellow coloration of ferricyanide; this is specially valuable for dealing with paper prints which are to be locally reduced.

[1] *Abrasive pencils* are sometimes used. These are prepared as follows: melt some hard paraffin wax and thoroughly mix into it some very finely powdered pumice. The amount of the latter should be as great as possible, while allowing the mixture to be poured. Mould in paper cartridges which have been made by rolling paper round a pencil. After solidification has occurred, the pencils may be peeled for the whole or part of their length, and may be pointed for allowing work to be done on very small surfaces. When a negative has been worked up in this way any grease is removed from it with light petroleum spirit (Miss Kate Smith, 1925).

thickness of the glass will prevent the outline of the work from showing too clearly in the print.

The back of a glass negative may also be covered with colourless or tinted *matt varnish*. Those parts which are to be clearly printed are then cut away with a scraper or with a wad moistened with alcohol, according to the area of the part to be treated. Parts which need darkening are covered with colour, as above, or are worked up with blacklead (graphite, plumbago), put on with a dry brush or with a soft stump.

An excellent matt varnish of average grain may be prepared according to the formula given below. The resins are dissolved in the ether[1] in a flask fitted with a sound wood cork. When they have dissolved, a process which may take several days in spite of frequent shaking, the benzene is added slowly, and the mixture is allowed to stand at least a week before the clear liquid is decanted—

Ether	14 oz. (700 c.c.)
Sandarac . . .	570 gr. (65 grm.)
Mastic (tears) . .	130 gr. (15 grm.)
Benzene, to make . .	20 oz. (1,000 c.c.)

A finer grain is obtained by increasing considerably the amount of ether; on the other hand, a slight increase in the amount of benzene gives a much coarser grain. The matt varnish may be coloured yellow by dissolving a certain amount of *aurantia* in it.

The precautions necessary for spreading the matt varnish on the glass side of the negative are described later in the paragraph dealing with varnishing (§ 479). The chief thing to avoid is the application of any varnish to a place already dried. A negative on which the varnishing has not been successful may be cleaned by rubbing with a wad of cotton wool moistened with methylated spirit.

None of these methods is suitable for film negatives, but equivalent results may be obtained by working on a thin sheet of matt celluloid or on a piece of tracing paper which is fixed to the back of the film by pieces of gummed paper.

[1] Ether, sometimes wrongly called sulphuric ether, is a very volatile liquid the vapour of which is very heavy and inflammable. It must be stored in well-corked bottles. The handling of ether, or the preparation of a mixture containing ether, must not be carried on near a fireplace or flame. The matt surface of this varnish is due to the sandarac used being insoluble in benzene, and so being precipitated, during the evaporation of the ether, in minute grains enclosed in a transparent layer of mastic.

470. Reduction of Contrasts by Soft Positive. It has often been suggested (A. Leitner, 1890) that excessive contrast in a negative may be compensated by placing against its back a soft positive transparency taken from the same negative. A special "auto-retouching" printing frame was indeed constructed (E. Artigue, 1903) for this purpose; with this apparatus a suitable transparency, which had been previously printed in the same frame, could be interposed in correct register.

471. Blocking-out. The object of blocking-out is to obliterate all traces of background in a photograph which could not be taken against a white ground; the shadows cast by an object standing on a white ground are also obliterated by this method.[1] For this, one of the following methods may be used: The negative may be worked-up by tinting the gelatine in the way previously described (§ 467), or an opaque paint may be applied, either to the glass side (for a portrait in which the outlines are not usually very clearly marked) or to the gelatine surface (photographs of furniture, machines, etc., in which the outlines are sharply defined). Water colour body-paint or water colours (chrome yellow, vermilion, india red, etc.), or a solution of 20 per cent bitumen in turpentine thickened with a little wax, or special opaque paints may be applied with a brush or pen (at least for the outlines) to a breadth of about half an inch. Areas beyond this band may be masked by sticking-on opaque paper. Good water-colour brushes, giving fine points, must be used. Before starting work it is advisable to remove all traces of grease from the surface of the negative by rubbing lightly with a wad of linen or cotton soaked in methylated spirit. In order to dilute the colour to the desired strength and to make sure of rapid drying, alcohol, or a mixture of alcohol and water, may be used.

472. Spotting. Spotting is the process by which the clear spots on a negative (dust, air bubbles, scratches, etc.) are touched out. For this purpose very small sable brushes are used; these, when moist, must give a very fine point. It is usually impossible to match the density of

[1] The professional worker generally avoids these shadows by arranging the objects on transparent glass and photographing them from above. The glass is supported above a well-illuminated white background and far enough from it to prevent any shadows being projected.

the spot exactly with that of the image, and thus it is more often attempted to produce a slightly greater density in the spot than exists in the surrounding image. The work is then finished by retouching the positive prints.

Spotting is carried out on a well-illuminated retouching desk. The ground glass of the desk should be masked with a sheet of black paper having an opening of small diameter. The different parts to be spotted are then brought

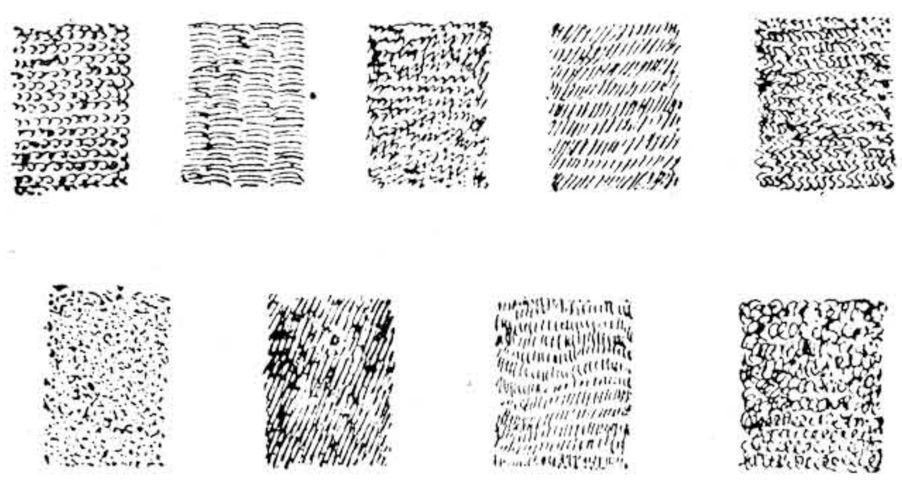

FIG. 177. TOUCHES USED IN PENCILLING A NEGATIVE

one by one over this opening, so that attention is concentrated on the spot to be treated.

For this purpose black water-colour, more or less diluted, may be used, or indian ink thickened with gum arabic or strong liquid glue (usually obtained in tubes); or blacklead mixed in a little negative varnish (§ 478). Mistakes may then be cleaned off by means of alcohol, but negatives which have been retouched in this way cannot be varnished unless a varnish is chosen which has no action on the resins of that previously used.

The work is followed through a lens. It is essential not to allow the colour to go so far as to form a ring round the hole to be filled, otherwise the defect is made worse. For very small holes, the colour used must be fairly thick; only a little must be placed on the brush, and the latter must be held perpendicularly to the surface of the negative.

(*d*) RETOUCHING

473. The Purpose of Retouching. As a rule, the term "retouching" (negative retouching) is used to describe work done on the gelatine of a negative with a pencil and scraper. Retouching corrects certain technical faults in negatives and, above all, faults of modelling. It is an almost universal rule in portrait photography to tone down or suppress wrinkles, freckles, and superfluous hair, to accentuate some lights and to lessen shadows which are too deep; often to modify an expression, and sometimes even to change the form of the face.

No retouching is admissible on negatives whose interest is scientific, historical, or documentary.

As a matter of principle, retouching should never be employed to make up for faults if the opportunity is available to avoid them by making a new negative under better conditions.

The beginner must be patient and should practise as much as possible on waste negatives. He will save a great deal of time if he can arrange to take some lessons from a practised retoucher.

The amateur who wishes, in an exceptional case, to retouch one of his own pictures, will save time by making an enlargement, on which all corrections may be much more easily effected, then making from this enlargement a negative of the size required.

474. Retouching Appliances. The retouching desk, large and firm,[1] should be installed for preference near a north-light window, and at such a height that the retoucher may work seated before it without having to lean forward. Blinds must be arranged to screen both desk and worker from light at the sides and back. For work with artificial light it is often advantageous to cover the usual mirror with a sheet of white matt paper.

The scrapers should be of very good quality and very carefully sharpened; one may use a surgeon's lancet, a vaccinating pen mounted in a solid penholder, or a large tailor's needle of which the point has been hammered and ground so as to obtain an edge formed by two surfaces inclined at about 45°, the needle then being fixed in a wooden handle, or mounted in the handle of an engraver's needle. A small oil-stone (Arkansas stone, white and translucent) is used for sharpening the scrapers; the surface of this stone must be kept soaked with mineral oil. Sharpening is finished with a razor strop.

It has also been suggested (R. Demachy, 1905) that engraving tools and the triangular scrapers used by engravers should be used for removing details or undesirable reflections from negatives. For local abrasion of the film, the use of a

[1] The folding desks described in many catalogues should, as far as possible, be avoided. They may, however, be considerably improved by replacing the silvered mirror with which they are fitted by a matt opal glass, and the ground glass serving as a support for the negative by a piece of clear glass.

scraping brush of metal or glass wire has been recommended.

We must also note the use of stippling tools, which are very like pencil-cases. In the inside of one of these tools is a point which is actuated by a minute electric motor, either with a to and fro motion or with an eccentric circular motion.

The pencils for negative retouching are of the best-quality graphite, selected from the groups H, F, HB, and B,[1] or the bare leads of similar grades mounted in the corresponding pencil cases, inside which the leads may be completely covered in order to protect them when not in use.[2]

Pencils should have long and very regular points; the wood is cut for a length of $1\frac{1}{4}$ in. or 2 in., care being taken not to break the lead. A little square of emery paper is then folded in two with the emery inside; this is held between the thumb and first finger of the left hand, and the lead of the pencil is introduced into the fold and turned between the fingers of the right hand, at the same time giving it a to and fro movement.

Pencils will not as a rule mark bare gelatine or the varnishes generally employed to protect negatives; the surfaces must first be prepared[3] by means of a special varnish (retouching medium).

Retouching medium may be prepared by dissolving gum dammar in benzene, or, better, in a mixture of equal volumes of benzene and turpentine. The proportions are 1 to 2 oz. of gum to 20 oz. of the mixture, adding a few drops of oil of lavender or castor oil. Turpentine could also be left for a long time in a badly-stoppered bottle, where it partially resinifies, due to oxidation by the air.

The outfit of the retoucher should also include a good lens, and in order to avoid the fatigue resulting from the unequal use of the eyes with ordinary lenses, we cannot too strongly recommend the use of binocular lenses making use of both eyes; these lenses are generally fixed to the head by means of a ribbon, or by side pieces as in the case of spectacles, thus leaving both hands free.

475. Technique of Retouching. Work with the scraper should always precede that with the pencil[1] and it must not be lost sight of that the retoucher should always restrict his work to what is absolutely necessary, being guided by a good print from the negative.[2]

The scraper is used by its point or its edge, according to the extent of the marks which have to be erased or the outlines to be modified; it must be handled very lightly in the same way that it would be used to remove an ink mark on paper; avoid any heavy cuts which would pierce the gelatine. It must always be remembered that the pencil must be used on the scraped parts in order to finish the work and to equalize the density on the scraped parts with those of the surrounding areas.

Before proceeding to retouch with the pencil it will be necessary to cover the portions to be worked on with a very light coat of medium.[3] For this purpose, a very small wad of cotton wrapped neatly in linen is used with a drop of the medium on it, or the end of the finger may be used. The excess may be removed by rubbing with the palm of the hand.

For preference, the hardest pencil capable or giving the desired effect will be used; thus the B pencil will be kept for those parts of which the density is to be considerably increased. The pencil should be applied very lightly in dots of fine hatching, straight or curved, or in overlapping circles. Each mark should be so light as to be hardly visible by itself; the direction of the marks should follow the general lines of the subject. Fig. 177 shows on an enlarged scale some of the styles commonly adopted for re-

[1] The letters constituting the distinctive marks of the various grades of pencil are the initials of the adjectives *hard, firm,* and *black.* The repetition of the letters H and B correspond to grades which are of increasing hardness or blackness. It must be remembered that the bare leads increase in diameter on passing from the hardest to the blackest, and therefore pencil cases marked with the same letters should be used so as to avoid confusion.

[2] For some time past use has been made of pencil cases in the interior of which the lead is actuated by longitudinal to and fro movements or by eccentric circular motion.

[3] In order to allow of pencil work without varnishing, the negative may be treated with powdered pumice gently rubbed in by circular movements of the palm of the hand.

[1] In the case of a negative from which a portion of the gelatine film has been torn away, the work of retouching is greatly facilitated by inserting a fragment of film of density slightly less than that of the surroundings. This film may be taken from a waste negative.

[2] Since gelatine always retains a considerable amount of moisture which does not allow of the best conditions for working, it is advisable, before commencing retouching, to dry the negatives by placing them for some time in an oven or near a fire.

[3] Local application of medium to an unvarnished negative sometimes leaves a slight halo. This may be avoided by previously cleaning the negative with a wad soaked in a little turpentine.

touching. The pencil should always be applied very lightly, the pressure being slightly greater in the middle of each mark than at the extremities. If it is required to darken certain parts of the image considerably, they must be worked over several times, each time putting on the marks at 45° to their preceding direction. Any retouching work which is too heavy may be lessened by scraping; moreover, at any time work may be entirely removed with a little turpentine or matolin.

During the process of retouching, it is well to examine the negative from time to time by turning it gelatine side downwards on the desk in order to judge the effect better.

Parts which are not dark enough, due to insufficient pencil work, may also be treated by stippling them with a fine brush moistened with crimson lake (water-colour).

After the retouching has been finished a trial print is made and is carefully compared with the original print.

476. Added Backgrounds. Some photographers occasionally pose their models in front of a black background, filling in a background to the negative by subsequent work on the glass side. One of the methods used for this purpose is very old (La Blanchère, 1863), and has even been used by some celebrated painters to make "negative drawings" of pictures and so to furnish an infinite number of prints by means of photographic printing. The negative (or plain glass) is placed on a black ground (velvet, cloth, paper) and the desired design is drawn on the glass by painting with white body-colour; it thus appears as a positive by reflection and a negative by transmitted light.

For very simple backgrounds (draperies, clouds, etc.), a very light and uniform layer of finely-powdered red chalk may also be deposited on the glass; this is worked on by wiping off with a cloth or stump. In this way only very feeble contrasts can be obtained, but the effect may be very agreeable. The work is protected by spraying a fixative or by covering with another glass.

CHAPTER XXXV

VARNISHING, STRIPPING, NUMBERING, CLASSIFICATION, AND STORAGE OF NEGATIVES

477. Varnishing of Negatives. The varnishing of negatives ensures them against numerous accidents. It is advisable for negatives which are required for large numbers of prints, and which in time become scratched by rubbing. Varnishing is also advisable for negatives from which a large number of prints are required on silver print-out papers. In this way, any risk of staining the negative by soluble silver salts from the paper is avoided when the printing is done in very damp weather. Varnishing is strongly recommended for negatives which have been retouched to any extent, but it is essential, in this case, to make sure, by trial on a waste negative, that the varnish which it is proposed to use will not destroy the pencil retouching by dissolving the film of medium which serves as a substratum. Finally, when enlarging by direct light, varnishing of the negative lessens the effect of minor superficial scratches which are not noticeable in contact prints. Certain varnishes, called *hot negative varnishes*, can be used only if the negative has been previously warmed to a temperature of at least 90° F. Unless this is done, a matt surface is formed by condensation of the moisture in the atmosphere on the surface of the varnish, which ·s cooled by the evaporation of the solvents.

Warming of the negatives is dispensed with if *cold negative varnishes* are used, the only precaution necessary being thorough drying of the negative beforehand. Varnishing of negatives, however, should never be carried out in a damp or cold room.

478. Preparation of Varnishes. Varnishes prepared with alcohol are generally used for glass negatives, and, since they do not dissolve the dammar of the medium, can also be applied to retouched negatives. Ordinary collodion to which a very small quantity of castor oil has been added is occasionally used; and a solution of celluloid in amyl acetate is sometimes employed. Alcohol varnishes should never be applied to films (which seldom require varnishing), as the alcohol dissolves the camphor, which is one of the essential constituents of celluloid. Instead, a water varnish for retouched negatives, or a benzene varnish in the case of unretouched ones, should be used.

It should be borne in mind that the various solvents usually employed in the preparation of varnishes are inflammable; if it is desired, therefore, to hasten solution of the resins by warming the mixture, the operation should be carried out on a water bath after the flame has been extinguished. Ether, or any mixture containing ether, should never be heated. All risk of fire can be avoided by the use of non-inflammable solvents, such as carbon tetrachloride and other chloro compounds, in the preparation of varnishes.

Hot Negative Varnish. The following varnish will take retouching quite easily, and is compounded in the cold or by aid of a moderately warm water bath.

Sandarac . . .	3 oz. (150 grm.)
Essence of lavender[1] .	145 min. (15 c.c.)
Alcohol, 96%, to make .	20 oz. (1,000 c.c.)

Cold Negative Varnishes. Waste pieces of celluloid film can be used in the preparation of the following varnish, after they have been lexiviated and dried—

Celluloid . .	150–200 gr. (15 to 20 grm.)
Amyl acetate, to make .	20 oz. (1,000 c.c.)

For unretouched negatives, one of the following varnishes, which take work with a pencil easily, can be used—

Sandarac . . .	2 oz. (100 grm.)
Acetone . . .	8 oz. (400 grm.)
Crystallizable benzene .	8 oz. (40 grm.)
Denatured alcohol, to make	20 oz. (1,000 c.c.)

or—

Powdered copal resin . .	1 oz. (50 grm.)
Gum dammar . . .	175 gr. (20 grm.)
Carbon tetrachloride, to make	20 oz. (1,000 c.c.)

The latter must be prepared boiling and filtered while hot.

Water Varnish for Films. 2½ oz. (125 grm.) of white gum lac are dissolved in 5 oz. (250 c.c.) of alcohol. When dissolved, 4 oz. (200 c.c.) of

[1] The essence of lavender, which is very expensive, is often replaced by essence of aspic, which has similar properties.

concentrated ammonia are added. The gum lac is thus precipitated in a finely-divided state, and the whole should be shaken several times to re-dissolve it (to a soapy resinous state). Boiling water is added to bring it to a volume of 20 oz. (1,000 c.c.), and the whole is kept on a water bath for a while. The liquid is never quite clear and should be used only after it has stood for some time.

Benzene Varnish for Films. A 2 per cent solution of gum dammar in crystallizable benzene is used. The film should be allowed to dry for several days, otherwise it might adhere to anything with which it is pressed in contact.

479. Application of the Varnish. Plates to be varnished should be thoroughly dried by keeping them for some time near a source of heat.

For cold varnishing, the plates are first dried in this way and should then be left on a marble slab until quite cold, and carefully dusted just before the application of the varnish. The knack of coating the varnish can be acquired after several trials, but its description is somewhat lengthy; Fig. 178 shows the various stages of the operation. The plate is balanced on the fingers of the left hand and kept level under the thumb at the left-hand corner. The varnish is poured on to the centre of the plate until it covers about one-third of the surface. It is then allowed to spread until the liquid reaches the two sides of the corner opposite the thumb. By continuous and imperceptible movements, this corner is inclined, and the other corners in succession, care being taken that the varnish does not reach the thumb and run up the arm. When the whole of the plate is covered, it is raised first at an angle of about 45° and then vertically, allowing the excess of varnish to drain into the bottle. While draining, the plate should be rocked from side to side to prevent streakiness. The negatives should then be put to dry, away from dust.

For hot varnishing, both the plates and the varnish are first warmed, and the coating carried out preferably over a hot slab or a stove, observing the same precautions as given for cold varnishing.

Films can be varnished by immersion in a dish which is filled with varnish to such a depth that the film is completely covered. After a few minutes, having ascertained that there are no air bubbles under the film, the latter is slowly lifted out, allowed to drain for a minute or two, and finally hung up by a corner until completely dry.

When using a water varnish, the films can, if required, be varnished as they come from the last wash water.

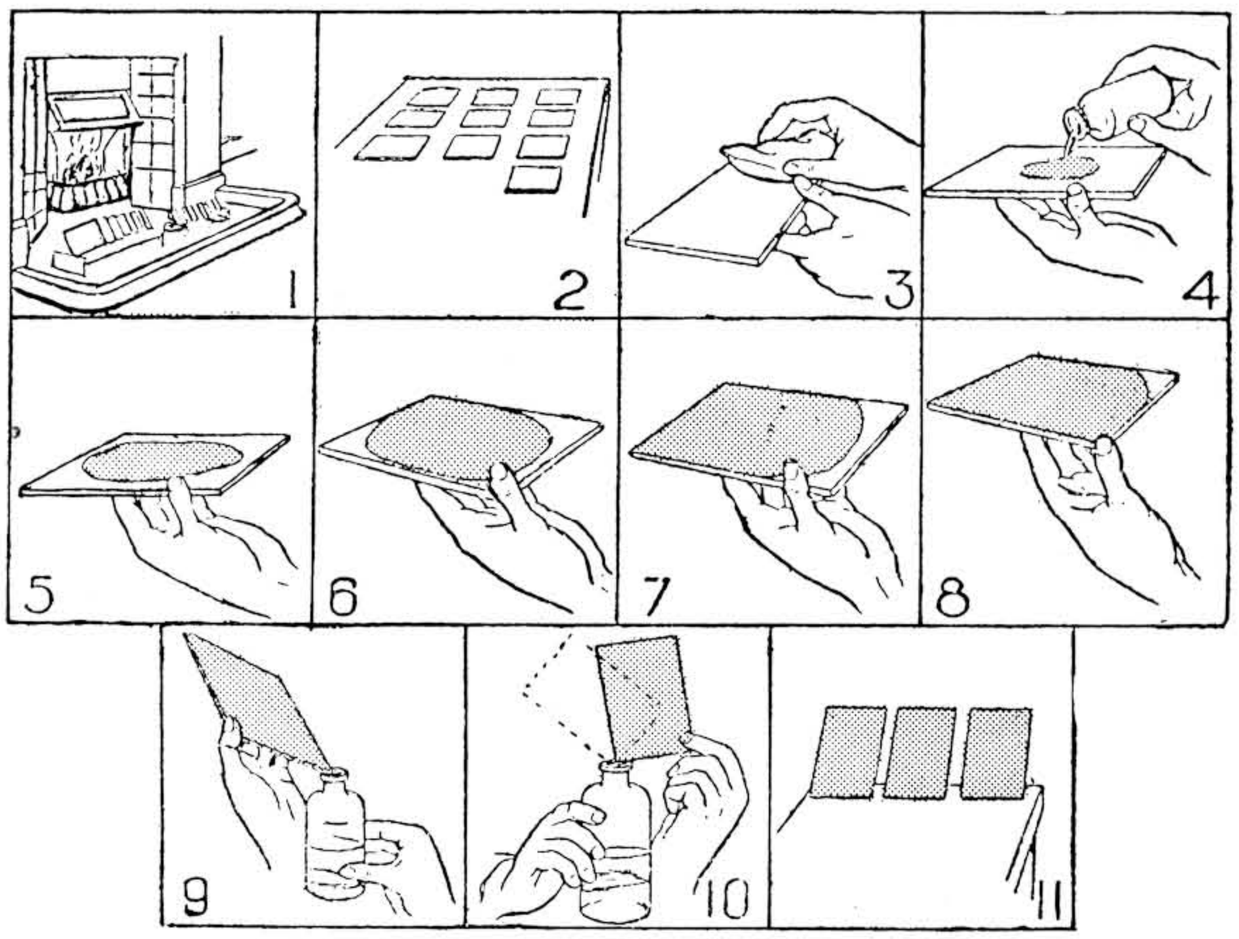

FIG. 178. MANIPULATION IN VARNISHING A NEGATIVE

480. De-varnishing of Negatives. Glass negatives, which have been varnished, and which have been subsequently found to require after-treatment, can be de-varnished by allowing them to soak for some time in denatured (industrial) alcohol in which 2 per cent of caustic soda or caustic potash has been dissolved. The varnish very soon becomes milky and can then be easily removed by gentle rubbing with a wad of cotton wool soaked in the alcoholic solution of soda. The negative is then washed in several changes of water and put to dry.

A water-varnished film negative may be de-varnished by immersing in a very weak aqueous solution of caustic soda (about 1 per cent) to which about 20 per cent of industrial alcohol may be added to avoid excessive swelling of the gelatine. The operation is completed by gentle rubbing with a tuft of cotton-wool, and washing in several changes of water.

Gum-dammar varnish can be removed from a film negative by prolonged immersion in rectified benzine (crystallizable benzene would evaporate too quickly). The cleaning is completed by rubbing with a wad of cotton-wool impregnated with crystallizable benzene, and the negative put to dry

481. Oiling of Paper Negatives. Prints may be made from paper negatives without treating the latter specially, but exposure is considerably prolonged, since the paper absorbs an appreciable proportion of the incident light.

To shorten the exposure it is usual to make the paper translucent by impregnating it with a varnish or a fatty substance. It is essential in this case not merely that the paper be dry, but it should be dried by heat immediately before applying the treatment; otherwise the water imprisoned in the fibres prevents the penetration of the substance into the pores in places, and considerably accentuates the grain of the paper, which is then more marked than if the paper had not been oiled. The paper should be dried before a fire or in a hot-air oven.

The most practical method of oiling consists in painting the back of the negative (placed on the bottom of an upturned dish to avoid any projections) with a brush dipped in vaseline oil. Two applications should be made with an interval of one hour between, and the oiled paper left for about two hours, afterwards removing any surplus oil by pressing between blotters.

482. Stripping Glass Negatives. Stripping, that is to say, detaching the film from the glass support, is used for certain methods of printing which require a reversed negative, or to save a negative which is cracked but not broken (§ 436) or, on occasions, to reduce the space occupied by a collection of glass negatives. The film can either be preserved as such, or on a fresh support.

To avoid the distension of the gelatine when freed from its support, it must be very well hardened. Preferably the plate should be kept at least one hour in a 3 per cent solution of chrome alum or ordinary alum, very summarily rinsed to avoid crystallization of the alum during drying, squeezed and dried. In case of emergency, formaline may be used (§ 427). Whatever method of stripping is employed, the gelatine film is first cut through to the glass with a scalpel or a very sharp pen-knife, either about a quarter of an inch from the edge of the plate, or as far as may be done without encroaching on the required subject.

Commercially, a solution of hydrofluoric acid obtained by diluting the commercial product[1] with about 100 times its volume of water, is generally used (Bory, 1884) for the purpose, which frees the gelatine by dissolving the surface of the glass to a slight extent. If stripping is carried out only occasionally, the difficulties arising from the use of hydrofluoric acid can be avoided by employing less drastic methods. It is possible, for instance, to use a mixture, prepared at the moment of using, of equal volumes of a 5 per cent solution of sodium fluoride, and of a 5 per cent solution of hydrochloric acid or 1 per cent solution of sulphuric acid (measured in volumes).

After a few minutes the film becomes detached. To make sure, the margin beyond the cut is tried with the finger-tip. The whole film may then be lifted off.[1] For this purpose, a sheet of paper (preferably parchmentized, also called sulphurized paper, or, failing this, good-quality white paper) larger than the film, is previously put to soak in a dish of water. This sheet of paper is now placed on the negative, which is laid flat on the table, and, working from the centre outwards, the water is expelled by means of a squeegee or a soft, thick, rubber roller. A corner of the paper is then gently lifted until a corner of the film is visible. If the film has not come away with the paper, it should be lifted with a blunt point (such as a soft pencil) to make it adhere to the paper and, taking hold of both paper and film with the fingers, it is pulled off with a gentle and even movement. The film thus taken off with the paper can then be transferred to its final support.

The above method, although quite suitable for small and medium sizes, is difficult for the treatment of very large negatives owing to the fragile nature of the gelatine film. In such cases the film should be strengthened, before making the marginal incision, by coating it with a 2 per cent solution of collodion to which a little glycerine is added, and then left to dry.[2]

[1] Concentrated hydrofluoric acid (solution of about 50 per cent) is very dangerous to handle; a drop falling on the hand causes a blister which takes a long time to heal, and inflammation which spreads up the arm. In dilute solution the acid is no longer dangerous. Whatever its concentration, it dissolves glass, stoneware and all usual metals, and can therefore be sent, stored and used only in containers (bottles, funnels and dishes) in gutta-percha, cérésine, moulded synthetic resins, or possibly in susceptible materials protected by a thick coating of varnish or paraffin wax.

[1] To be certain that the film is not adhering to the plate, a waxed silk thread fixed on a kind of bow is sometimes passed between the glass and the film with one hand.

[2] If the negative film is to be kept as such for making prints which require a reversed negative, it should be coated with a syrupy solution of rubber before collodion varnishing, and left until the excess of solution has drained off and the greater part of the benzene evaporated.

Prolonged immersion in the bath of fluoride solution is now necessary for the liquid to penetrate completely between the film and the glass.

483. A slower but very certain method (Liesegang, 1892, perfected by H. Drouillard, 1903) consists in placing the negative to be stripped, after it has been cut round the edges, in the following bath for *at least* half an hour (it can be left there all night). This bath can be used repeatedly—

Water, to make	20 oz.	(1,000 c.c.)
Soda carbonate, anhydrous	260–350 gr.	(30 to 40 grm.)
Formaline	1 oz.	(50 c.c.)
Glycerine	90min.	(10 c.c.)

On removal from this solution, the surface of the negative is blotted off, and, without any rinsing, it is then left to dry completely, hastening the latter process, if necessary, by gentle warming.[1] The dry negative is now placed in a solution containing about 5 per cent of hydrochloric acid. This causes an effervescence, some of the carbonic acid gas thus evolved being liberated between the film and the glass. In this way the film becomes detached, or at any rate its adhesion is so reduced as to allow of it being removed on to paper as described above.

Finally, attention should be called to the following rapid procedure, which is very suitable for negatives of small size and which can be used after washing but before drying them (A. Popovitsky, 1900). The negative is immersed for 10 to 15 minutes in a saturated solution of potassium carbonate (§ 429), in which about 5 per cent of caustic soda or potash has been dissolved. The negative is then dried between blotters, polished with a soft cloth, and a cut made round the part required. One of the corners is then lifted with a penknife and the film detached with a gentle pull.

484. Stripping of Film Negatives. It is sometimes necessary to strip the gelatine film from film negatives, even although such negatives, being extremely thin, can be printed from either side satisfactorily, provided care is taken to avoid blurring, which might result from imperfect contact between the negative image and the sensitive coating.

For this purpose, it has been proposed (Lumière, 1903) to swell the celluloid base by immersing it in one of its solvents, such as acetone, to which enough water has been added to prevent solution.

More recently, the following process has been recommended (Kodak Co., 1922): The surface of the negative is coated with a 6 per cent solution of gelatine, flowed on at the lowest possible temperature. After drying, the film is placed in a strong solution of formaline (25 to 50 per cent of the commercial liquid) for about ten minutes, and then again dried. A cut is then made with a penknife, and the negative placed in a 15 per cent solution of acetic acid, when, after a few minutes, the gelatine film can be detached from its support.

485. Transfer of the Film to a New Support. When the film is to be transferred to glass or celluloid, the latter should be previously coated with an adhesive, such as a weak solution of gum arabic, or with a solution of gelatine of about 10 per cent strength[1] poured on while hot and allowed to set to a jelly. The film can also be transferred to a piece of perfectly clean glass which has been polished with French chalk or coated with a solution of wax in ether; after drying the film on this temporary support, it is coated with a syrupy solution of rubber, allowed to dry, and finally given a coat of collodion or celluloid varnish.

Either before or after transferring to the final support, the film should be washed with water to get rid of the salts used in the stripping process; when the washing is done before transferring, a piece of plain glass, larger than the film, is placed on the bottom of the dish on which the film can be lifted out without risk of tearing it.

Care should be taken to put the right side of the film in contact with the support. The side will vary according as the film is placed on a temporary or a final support, or if it is to be used for making direct or reversed prints. If, when the film has been taken off on a piece of paper, the upper surface is not that which must come into contact with the support, it can be transferred to another piece of paper and then applied to the prepared surface of the final support, which has been evenly wetted (or coated with a solution of gum, if this adhesive

[1] The drying rack should be placed in a clean dry dish, as the film sometimes comes off while drying.

[1] When the new support is to be celluloid, this gelatine should be dissolved in glacial acetic acid of about 10 per cent strength, after which about a quarter of its volume of alcohol is slowly added, so as to make the gelatine adhere to the celluloid. For the occasional stripping of a negative a fixed-out and well-washed film or plate can be u ed.

is used). The excess of liquid is removed with a squeegee or a rubber roller.

486. Removal of the Gelatine Coating on the Back of Film. When the gelatine coating on the back of a film has been stained or scratched it can be removed fairly easily (J. I. Crabtree and F. E. Ross, 1926). To do this, the emulsified side of the film is applied to an adhesive surface, and perfect contact is ensured by passing a soft rubber roller or squeegee, care being taken that there is no defect in contact at the edges of the film in a width of about $\frac{4}{5}$ in.

The waterproof adhesive surface can be a glass covered with rubber (coated at least 30 minutes previously with a thin layer obtained by evaporating a syrupy solution containing at least 5 per cent amyl acetate), a glass covered with a coating containing vinyl resins (§ 283), or surgical rubber strapping. The back surface is then moistened with a mixture of equal volumes of water and acetone (§ 484). When the work is finished the film is separated from the adhesive and cleaned with petrol.

487. Removal of Films from Waste Glass and Celluloid Negatives. In cleaning off the films from old negatives[1] and for recovering the silver contained in the films, the simplest method consists in softening the gelatine by long immersion in water to which a small quantity of caustic soda has been added, and then dissolving it by placing in very hot water. The partly melted gelatine is then scraped off with a piece of wood, and the cleaning of the support completed by leaving it for a minute or two in a very weak solution of eau-de-Javelle (sodium hypochlorite) followed by rinsing in cold water.

Another method is to soak the gelatine in a solution of soda carbonate of about 10 per cent strength to which a little caustic soda has been added; when dry, the film is stripped off by treating with hydrochloric acid, it being of course unnecessary to take any of the precautions given above for proper stripping.

488. Titles, etc., on Negatives. Numbers, titles, and signatures may be added by cutting out the letters from a dense part of the image[2] with a fine-pointed graver, or by writing with a pen on a lighter part. The latter method is preferable, being quicker, and the work is of better quality. Instead of writing in ink, which requires the use of a retouching desk, it is simpler to use yellow water-colour which has been thinned to a suitable consistency. The writing is then quite visible by reflection, and can be done with the negative flat on an ordinary table. It is usual to write from left to right, as is the practice of engravers and lithographic draughtsmen, on the negative, turned upside down, making the characters as shown in the accompanying specimen (Fig. 179). After a few hours' practice it is possible to write in this fashion quite readily and without using a specimen.

In the case of negatives made for large numbers of prints, the title is generally set up in type, and printed therefrom on to the negative.[1] Special rubber type is sold giving an imprint similar to that shown in the specimen. When the letter has been assembled in the type holder, it is printed on a thin part of the negative with a greasy ink. The density of the imprint is increased by dusting over with a little blacklead, afterwards brushing off the excess: the lead adheres to the greasy ink and not to the dry gelatine.

Titles to print white on a black ground can also be set up in type and transferred to the negative in various ways. The impression can be made on thin sheets of cellophane with a very stiff ink and moderate pressure, dusting over with blacklead as above while the ink is still tacky. The titles are then cut out, and the

[1] Commercially, various enzymes are used to remove the gelatine "by digestion." Celluloid films which have been freed from gelatine with caustic soda and insufficiently washed have been known to ignite spontaneously while drying.

[2] For engraving negatives there have been placed on the market bronze styles fitted in an insulated handle and heated to about 176° F., and connected to alternating current by a small electric bell transformer. The hot point melts the gelatine, leaving a transparent line with sharp edges.

The following method of transferring an inscription on paper to gelatine has been suggested: The inscription is written on glazed paper, using a glass pen, with a very concentrated solution of potassium ferricyanide thickened with a little glycerine and to which a small quantity of blue dye may be added. The paper is transferred to the gelatine surface which has been previously moistened in the required place. When it has been in contact with the gelatine for a few minutes, i.e. when the silver has been attacked, the silver ferrocyanide so formed is dissolved out in a fixing bath. The negative should then be washed.

[1] Another method is as follows: Using a good typewriter, from which the ribbon has been temporarily removed, the title is written on a piece of very thin paper which has been placed between the prepared surfaces of two pieces of unused black carbon paper. In this way the letters are printed on both sides of the paper at the same time, thus obtaining sufficient density. A space for the title should be reserved on the negative as follows: A black gummed strip is stuck on the emulsion before exposure on the side corresponding to the bottom of the picture. This is detached before development so as to allow free access for the fixing solution (E. J. Kloes, 1925).

printed side fixed to the gelatine with a very weak solution of gum arabic which has been applied on the part to be covered.

The imprint can also be made on lithographic transfer paper with a good transfer ink. The titles, when cut out, are placed face upwards on a pad of damp blotting paper, and covered with some dry blotting paper to prevent their curling up.

After a few minutes the soluble layer of the transfer paper becomes sufficiently moistened, and the printed surface of each strip can then be applied to the gelatine of the negative in the required position, causing it to adhere by pressure with the fingers. The back of the paper is dried with two applications of dry blotting paper, and the transfer done by pressure with a burnisher. After some time[1] the back of the paper is moistened with a paint-brush, a corner raised with the point of a penknife, and the paper lifted smoothly off. When the gelatine is dry, the ink impression is strengthened by powdering with blacklead (D. Nyblin, 1916).

Titles which have frequently to be repeated, such as a trade-mark or a signature, can be copied on a contrasty plate or film from the original. The prints can be made on transfer paper or on a very contrasty plate from which the film is stripped, and applied while wet to the gelatine of the negative.

For titles to print black on a light part of the picture, a film negative of the desired text[2] can be transferred to the negative after having scraped off the gelatine from an area to receive it, the title negative being secured with a weak solution of gum-arabic.

In the case of a signature which has to appear in black on a white ground, a method of double printing is generally used. A negative of the signature is made on a contrasty film or plate, any small defects being carefully blocked out on the dense portion, and the sides extended with masks of opaque paper. After exposing the sensitive paper under the negative of the subject, it is then exposed under that of the signature, adjusting the latter to a suitably chosen position, or setting it against stops of thin cardboard cemented to the signature negative.

[1] Judging the correct length of time is the beginner's only difficulty. It is therefore advisable to take at least two proofs of each specimen, so that one can be used to experiment with on a waste negative.

[2] This text can be made, for instance, with the help of a stencil (cut-outs in a disc or ruler of celluloid) of the type used by industrial artists or for titling amateur ciné film, and which permits of normal or reversed writing at will.

489. Classification of Negatives. A methodical classification is necessary in order that negatives required for any purpose can be found without loss of time. To this end, all negatives should be numbered and arranged in numerical order. Since negatives of different sizes cannot be kept together without risk of accident, it is advisable, in order to avoid mistakes, to adopt a separate numbering for each size. Each size then forms a series designated by a letter which precedes the number.[1]

An index of the negatives will naturally be carried out differently by a professional, amateur or research worker, classification being according to commercial importance in the first case, whilst technical information is of primary importance in the last two cases.

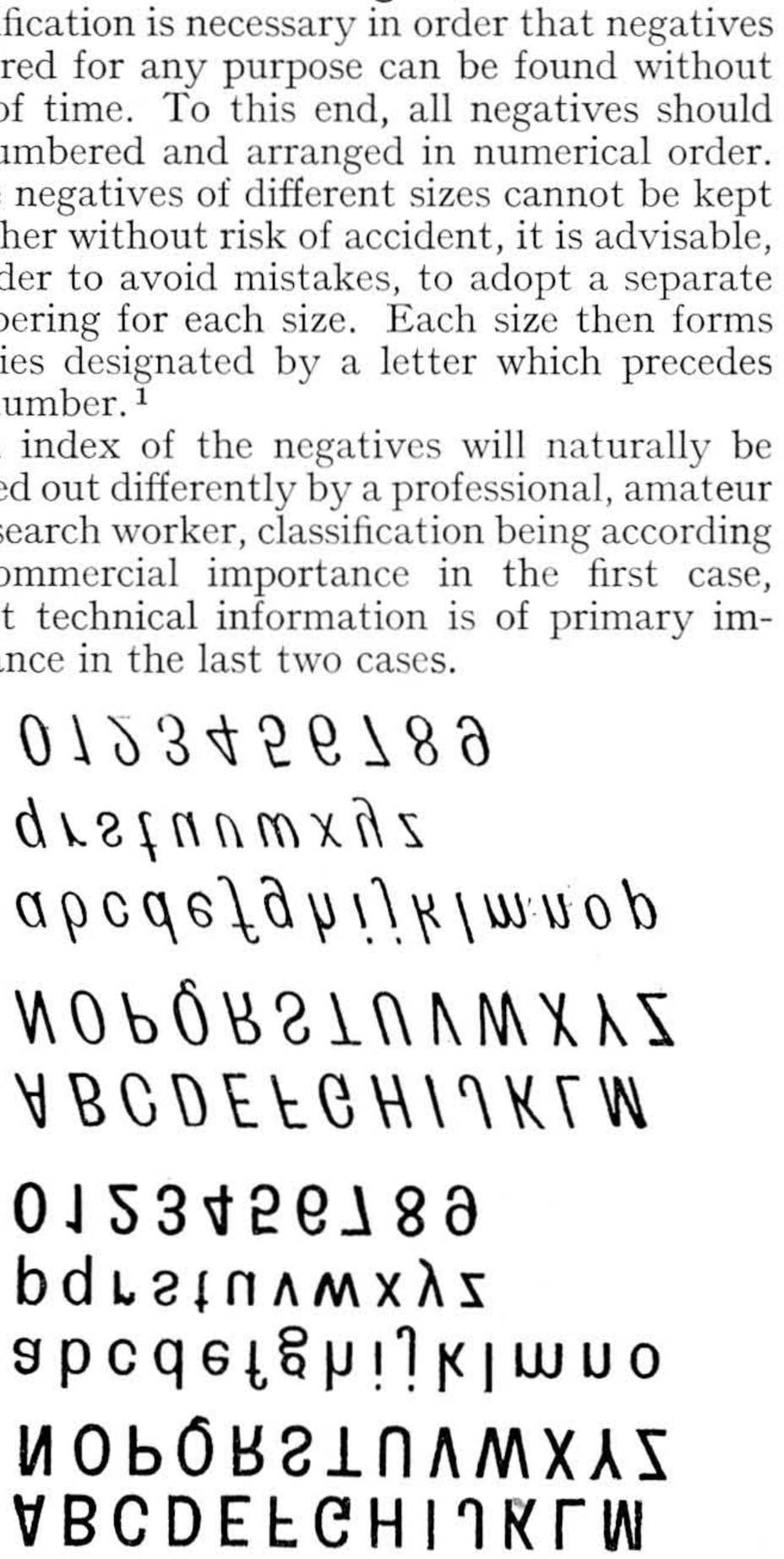

FIG. 179. REVERSED TYPES FOR TITLING NEGATIVES

Such a file-index, besides containing numerical classification data (negative number, date, type of subject), and particulars of accounts (details of the order, agreed price, amount of deposit, promised date of delivery, amount payable) may also contain any information which is likely to explain the cause of a failure or deterioration, and any facts which will enable one to profit in the future by the experience gained (camera used, number of plate-holder or changing box, lens aperture, plate used, light-filter, lighting, exposure, and any further details). The register may also contain any data which

[1] It may not be always necessary, however, to mark the series letter on negatives of the commoner size.

might facilitate the future use of the negative (suitable methods of printing, the best conditions for printing or enlarging, the most desirable method of mounting proofs, etc.).

In some cases the index can be usefully supplemented by a complete collection of actual prints contained in an album or card index file. All or some of the particulars mentioned above (with, of course, the exception of accounts) may then be written at the side or on the back of the print instead of in the register.

490. Storage of Negatives. The most economical method of storing glass negatives, and that which requires the least space, is to keep them in the cardboard boxes in which they were originally packed. Each negative should be protected by a wrapper of some kind,[1] on which the series letter and the number of the negative is written, to avoid the negative being scratched, or the retouching, working-up, or title on the negative being rubbed off. These wrappers should be made preferably of translucent paper (crystal paper) so as to allow of the negative being identified without removing it from its wrapper. The boxes should be kept on shelving in the same way that volumes are placed in a book-case, and labels indicating the lowest and highest numbers of the negatives contained therein should be stuck on the side of the box or lid, exposed to view. Apart from the fact that this arrangement of the boxes on edge allows of their being taken out and replaced without disturbing the others, the boxes of negatives suffer the least possible strain, and are therefore less exposed to accidents. Owing to the considerable weight of a fair-sized collection of glass negatives,[2] the shelves should not be fixed with brackets nailed to the walls or partitions, but should be supported either by iron brackets (corbels) securely screwed to the wall, or by wooden supports fixed to the wall and resting on the floor, placed close enough together to prevent any appreciable sagging of the shelves.

Similar arrangements could be adopted for storing a small quantity of film negatives, each film being protected by a transparent envelope.[1] For large collections, boxes made of sheet-iron are employed, in which the envelopes are arranged vertically, in the manner of a card index. Negatives should be stored in a room which is neither too damp nor too dry.

In Great Britain the storage of celluloid in the form of sensitive film or celluloid negatives is subject to the regulations set forth in "Statutory Rules and Orders, 1921, No. 1825" (H.M. Stationery Office, London, Edinburgh, Manchester, Cardiff, and Belfast, price 1d.), under Section 79 of the Factory and Workshop Act.

As regards sensitive films, kept on premises in a quantity which as a rule does not exceed 14 lb., storage in a drawer or cupboard in a private office or other room in which no handling of celluloid is done, is officially regarded as complying with the requirement for "safe storage."

The regulations in respect to developed negatives will depend to some extent on the amount of such negatives. Where the latter are of considerable weight, they require to be kept in a fire-resisting store, such as a cabinet or cupboard constructed of fireproof material, e.g. sheet metal, asbestos sheeting, or wood effectively treated to resist flame. This store requires to be of sound construction and is to be kept locked. The door or lid needs to be so arranged that there is no naked light or open fire near at hand. The store should not be situated in a workroom where celluloid is handled, nor on a stair, nor near a door, nor in a passage through which persons might have to pass to escape in the event of a fire. The nature of the contents should be clearly marked on the outside of the store, and a cautionary notice put up prohibiting the use of naked lights. An adequate supply of buckets of water should be kept always available close outside the store, water being the best extinguisher of burning celluloid.

The foregoing recommendations are for general guidance, and are subject to modification, according to the quantity of celluloid, or on account of the design of the building or nature of the processes, at the discretion of the District Inspector of Factories.

[1] The transparent envelopes usually sold for negative storage are quite suitable for films, but totally unsuitable for plates. The sharp edges of the glass cut the envelope when the plate is slipped in, and after a certain amount of handling, the edges of the envelope which overlap the plate become creased and bent. Again, the film side of the negative should never be allowed to come into contact with the gummed part of such envelopes, since gum of bad quality has been known to cause deterioration of the image.

[2] The maximum load usually allowed in modern residential buildings (in France) is about 60 lb. per square foot (300 kilogm. per square metre).

[1] Attention may be drawn to the albums containing envelopes of transparent paper for this purpose.

PART 4
PRINTING PROCESSES

CHAPTER XXXVI

PRINTING PAPERS AND PRINTING METHODS

491. The Principal Printing Processes. A great number of photo-chemical reactions are known on which processes for producing photographic positives can be based. There are also various reactions by means of which the substance of the image produced by the action of light can be modified, thereby altering its colour (*toning*). For this reason the study of these processes must be necessarily limited to those in current use, and to any others of particular or special interest.

Any classification of working methods is to a great extent arbitrary; in the following pages a classification based on the nature of the photo-chemical reaction has been adopted.

492. Methods of printing with *silver salts* may be conveniently divided into two principal groups, according as the image is entirely formed by the action of light (these are known as *print-out* processes, also called *P.O.P.*), or whether it is obtained by the development of a latent image by a process very similar to that used for the production of negatives.

In the first case a halogen salt of silver (most usually the chloride) is used in conjunction with either a soluble salt of silver or some other substance capable of absorbing the halogen liberated by the action of light (a developer, for example, or some other reducing agent). The sensitive compounds may be formed either in the support itself, or in a " sizing " with which it has been previously coated (*albumenized* or *salted papers*), or an emulsion of the sensitive material may be prepared with gelatine or collodion and afterwards coated on the required support (gelatine P.O.P.; collodion P.O.P.).[1] Certain papers belonging to this latter category contain the necessary toning materials (gold salts, or, more usually, selenium or tellurium compounds), incorporated in the actual emulsion, and are then known as *self-toning papers*.

[1] It should be pointed out here that these papers can be also used for the physical development of a very weak image which has been obtained by exposure to light for only a part of the time necessary to produce a picture of satisfactory density.

A considerable quantity of light is required to form an image on these various sensitized papers (exposures of the order of a quarter of an hour in good diffused daylight are required when printing from a negative of average density) and the various manipulations can be carried out in weak daylight. Thus it is not practicable to use such papers for projection printing (enlarging or reducing). The final tones of prints obtained in this way usually vary from reddish-brown to purplish-brown.

In the second case (development papers), apart from having a very much slower speed, the emulsions do not differ essentially from negative emulsions. For a long time manufacturers have made such sensitive papers in the form of gelatine emulsions, although several attempts have been made to use collodion for the purpose. The sensitive substance may be either silver bromide, silver chloride, or a mixture of the two. In all cases, such emulsions are too fast to allow of their being used for daylight printing. Gelatino-chloride emulsions are considerably slower than gelatino-bromide ones, and are insensitive enough to allow of their being handled in weak artificial light without the use of a safe light. This fact has led to their being incorrectly called *gaslight papers* (to be handled in gaslight). Silver bromide or silver chloride papers normally give black tones, whilst chloro-bromide emulsions, which are of intermediate sensitivity, are used as a rule for the direct production of warm tones. These various emulsions, and particularly the more rapid ones, constitute the best material for enlarging purposes.

All the above-mentioned varieties of silver papers are often made in several grades for the printing of vigorous negatives (*soft papers*), normal negatives, and weak negatives (*contrasty papers*) respectively.

Toning of the silver image can be done either by replacing it by other metals (gold, platinum, etc.) or by converting the silver into a coloured compound (brown silver sulphide), or into a

colourless substance by which a certain quantity of a coloured compound can be absorbed. The last-named process allows of a very wide range of colours being obtained.

493. *Ferric Salts*, more particularly the organic salts (tartrate, citrate, oxalate, iron-carbonyl, etc.), are converted into ferrous salts by the action of light. This property may be taken advantage of in various ways by reason of the very different reactions of these two classes of compounds.

Ferrous salts give a blue precipitate with potassium ferricyanide, whilst no precipitate is formed with ferric salts, and it is possible to obtain a blue image which can be fixed by simply washing in water. *Ferro-prussiate* papers, based on this reaction, are used industrially in large quantities for making copies of tracings, the " blue-prints " thus obtained consisting of white lines on a blue ground.

Ferrous compounds are capable of reducing the salts of the precious metals to the metallic state, and this property forms the basis of the *kallitype process* and the *platinum process*. Such processes give grey or black tones by simple washing in water or by treatment with a solvent capable of dissolving the ferrous salt formed and also the silver or platinum salts.

494. Various animal and vegetable colloids (gelatine, albumen, gum, etc.), when impregnated with a *bichromate* and exposed to light, are tanned by the chromium oxide which is formed during the photo-chemical decomposition of the bichromate. Differences of solubility and permeability between the parts exposed to light and those protected from its action may be used to obtain photographs in a large number of ways which have the following characteristic in common: In all cases the image consists of a pigment (colour in powder-form, or ground with oil) or a colouring matter which has taken no part in the reaction (*pigment prints*).

For example, suppose a finely powdered pigment is incorporated in gelatine, and the mixture coated on paper; after sensitizing with bichromate it is exposed to light under a negative (neglecting for the time being the *transfers* usually necessary). It is then treated with warm water, which dissolves the unhardened gelatine, gradually revealing the picture, which now consists of pigment incorporated in insoluble gelatine. Whatever the chosen pigment, such papers are known as *carbon tissues*, since lamp-black was the pigment with which they were first made.

A film of bichromated gelatine, which has been washed with water after exposure to light under a negative, is not wetted in those parts which have been protected from light-action. Now *greasy inks* are repelled by a wet surface, and can adhere only to a dry one, so that inking with a brush or roller will thus form an image consisting of printing ink, which can either be kept as such, or transferred to plain paper (*oil prints*, transfer prints in greasy ink).

A layer of bichromated gelatine which has been exposed to light under a positive is capable of absorbing dye from a dye-bath in the parts which have been protected from the action of light, as the dye is not able to penetrate those parts which have been rendered impermeable. In this way it is possible to obtain a perfectly transparent picture consisting entirely of stained gelatine (*hydrotype*).

Another process is as follows: Glass is coated with a thin layer of a mixture of gum-arabic, some hygroscopic substance (honey, glucose, sugar), and a bichromate, and the whole dried by gentle heat. This is then exposed under a positive, and a finely-powdered pigment spread with a brush over the surface. The moisture of the atmosphere, which is absorbed more rapidly on the parts protected from light than on those which were exposed, renders the gum-arabic adhesive again and capable of fixing the powder which has been dusted on, thus forming a positive picture when the excess of powder has been dusted off. This can be permanently fixed by varnishing if an inert powder has been used (e.g. plumbago), or by baking if the colour is vitrifiable (*powder* or *dusting-on process*; *photographic enamels*, and *photo-ceramics*).

495. An image consisting of metallic silver can be converted into a pigment one, or it can be utilized to obtain a pigment image in another layer of gelatine. For this purpose, the silver is caused to bring about a reaction, giving rise to tanning products which can render insoluble the gelatine in immediate contact with the original silver image.

In this way a developed print on gelatino-bromide paper may be either converted into an image in greasy ink (*oil* or *Bromoil process*), which can be further transferred to plain paper, or it can be used to insolubilize the gelatine of a carbon tissue previously soaked in reagents which react with silver (*ozotype* process).

Finally, there may be mentioned various printing processes utilizing photochemical reactions caused only by the extreme ultra-violet and not

by luminous rays, the images therefore not having to be fixed. (It is evident that the negatives must have a base transparent to the rays used, cellophane for instance.) The paper can be sensitized, for instance, with a solution of aminophenol to which an alkaline nitrate has been added.

496. Supports for the Photographic Image. Photographs can be made on, or afterwards transferred to, a large variety of materials: papers of various textures, tints and substances, fabrics (silk, canvas), metals or metallized papers, glass, celluloid, etc. Of all these, the most commonly used support is paper, and the words " photograph," or " photographic print " are always understood to mean a paper print. Glass and celluloid (and its non-inflammable substitutes) are chiefly employed for *diapositives* or *transparencies* for ordinary and motion picture projection.

An emulsion containing salts of silver has been sprayed on to the inside walls of a room, first covered with plastic paint, for the purpose of their decoration by producing enlargements on the walls (E. Mollo and H. C. Merrett, 1934).

497. Photographic Papers. Positive photographic papers (other than albumenized or salted papers which are made solely from rags) are usually coated with a thin layer of a suspension of barium sulphate, and sometimes kaolin, in gelatine, before coating with the emulsion, after which the paper is burnished with rotary brushes and calendered. This baryta coating has two purposes. It insulates the sensitive emulsion from impurities in the paper (chiefly metallic particles), and increases the brilliancy of the whites of the picture. The baryta coating is particularly thin on papers which are to exhibit a textured surface.[1]

Photographic papers are made in various thicknesses: thin (chiefly used for small-sized prints), thick (used for large prints, and also for making prints with wide margins which are not to be mounted), thin card or cardette (which is used almost exclusively for post-card printing).

Photographic papers can be obtained with smooth surfaces, or with surfaces which show a more or less marked texture (grained, rough, imitation linen, etc.). The smooth finishes (glossy, semi-glossy, or matt)[1] are obtained as much by the composition and the method of application of the baryta coating as by the introduction into the emulsion of various substances (e.g. crude starch) which are used to increase the matt effect.

A picture is always sharper and more vigorous on glossy paper than on the other varieties, the blacks being denser for the same quality in the whites. For this reason, such papers are used for purely record purposes, and for making prints for photo-mechanical reproduction.[2]

Glossy or semi-glossy papers are usually preferred for small or medium-sized prints, and, with the exception of the cases already mentioned, matt and grain-surfaced papers are generally chosen for large-sized prints and enlargements. In this way the excessive detail nearly always present in any photograph is minimized, whilst surface reflections, which are difficult to avoid when viewing a large picture, are reduced in some measure. At the same time, the spectator is obliged to some extent to step back, so that the picture is seen from the best viewpoint with regard to its perspective (§ 25).

Photographic papers are made with either a white or slightly-tinted base (pink, mauve, chamois, for print-out papers; cream or chamois for development papers), and occasionally strongly-coloured bases are obtainable (e.g. blue for pseudo-night effects). However, a print on white paper can be given any desired tint or depth of tint quite easily by immersing it in a bath of suitable dye.

To decrease the overcrowding of records, use is sometimes made of papers with emulsion on both surfaces, a temporary stain preventing the light used for printing one surface from acting on the other one.

There are also gelatine-bromide papers with a removable sensitive coating which, after the print is finished (preferably after drying), can be transferred to any other support, such as paper with a metallized surface, wood, ivory, opal glass, etc. Treatment with tepid water

[1] Baryta papers can neither be folded nor creased, especially when dry, without cracking along the fold, and several manufacturers often coat emulsions without baryta coating on papers intended for industrial or commercial use. Sensitive papers coated on a translucent base can also be obtained, and are coloured through the back by placing them on a tinted or coloured background.

[1] Semi-glossy papers are commonly called semi-matt, velvet, satin, and (mistakenly) carbon papers. Matt papers are occasionally quite erroneously given the name of platino-matt.

[2] Photographs of articles for catalogue purposes are an exception, as they usually have to be worked up or blocked out. For this reason smooth matt papers are used, since such papers take retouching more easily.

dissolves an under-coating of soft gelatine temporarily holding the emulsion to the paper. The instructions sent out with these papers must be followed.

498. Photographic papers can be obtained either in sheets of various sizes, which are sold in packets of 12 or in boxes of 100 (large-sized sheets are supplied rolled in a cylindrical cardboard case), or on reels of various sizes in lengths of 10, 25, 50, or 100 yards (10, 25, 50, or 100 metres).

Cut sheets of sensitive paper sent out in packets or in boxes are sometimes protected by an interior wrapping of paper waterproofed with paraffin wax, contact of which with the sensitive surface can cause spots owing to the greasy material deposited on the emulsion preventing the action of the baths. In the case of such packing it is necessary to turn over the sheet of which the sensitive side would touch the wax paper.

It is well to place sheets of paper required for immediate use in a perfectly light-tight cardboard box, fitted with a closely-fitting lid, so saving the nuisance of frequent re-wrapping. All details concerning the nature of the paper should be written on the box or lid, so as to avoid any risk of confusion.

In cases where it is necessary to use large sheets of paper for making small-sized prints, the best method of cutting up the paper with the least possible waste should be found by a few trial lay-outs. Unused paper should be handled only with clean and dry hands, avoiding contact with the sensitive surface as much as possible. When cutting-up paper, two sheets should be placed with the emulsion sides face to face, and the two cut at the same time.

499. Positive Plates. Although various attempts have been made to introduce positive plates coated with a print-out emulsion or with an emulsion comparable with that of gaslight development papers, only two types of positive emulsions on glass are commonly met with in commerce. These consist of a slow gelatino-bromide emulsion for obtaining pictures of black tone, and a chloro-bromide emulsion of very fine grain and very much slower than the preceding one, giving a very varied range of warm tones. With the latter plates, tones ranging from warm black to vermilion may be obtained by direct development, according to the methods adopted.

In the case of transparencies which are to be used for window decoration, the positive plates are coated with a matt emulsion, thus obviating binding up with ground glass.[1]

The range of tones obtainable on a transparency plate is very much greater than that obtainable on paper under the best conditions. In fact, in a transparency, it is possible to differentiate between black and a grey which transmits $\frac{1}{200}$th of the light transmitted by plain glass. With a paper viewed by reflected light it becomes impossible to differentiate between black and a grey reflecting $\frac{1}{50}$th of the light reflected by plain paper.

500. Positive Films. Positive cinematograph films are coated with a black-tone emulsion which is faster than that of positive plates, so as to allow of very rapid production in machine printing. The contrasty negative films intended for reproduction work may be successfully used for positive printing. They can be used advantageously for lantern slides made for exchange between slide makers and for circulating collections, the films being placed between glass for exhibition; or, if sent between glasses, the latter can be replaced without damaging the slide itself in the case of breakage during transit.

501. Colour of Image and of Base. It has been shown that there is an almost unlimited choice of colours of the image and the tint of the base of photographic papers. Although a slightly-tinted base sometimes helps to suggest certain effects (§ 21), and variations in the colour and tone of the pictures themselves are useful in relieving the monotony of a collection, such means should only be used with discretion and in moderation. Engravings (lithographs, etchings, etc.) and original drawings, for the execution or printing of which the artist has a large selection of crayons or inks of the most varied colours at his disposal, are often finished in a black or warm black tone on white or slightly-tinted papers rather than in bright colours (excepting, of course, originals in colour). Incidentally, many cinematograph films would be all the better if they did not contain such a complete assortment of all available colours. Still more should startling effects be avoided, such as would be given by the use of green for a portrait, or deep-red for a seascape or landscape. Finally, the colour of the picture and the tint of the base should be in perfect harmony. Thus, a blue-black image would not suit a cream or chamois base, whereas a warm black picture would go well with a base of that colour.

[1] One or two makers supply black-tone positive emulsions coated on plates of opal glass.

502. The Gradation of a Sensitive Paper. Let us suppose that a certain sensitive paper, on free exposure to a source of light for one minute, becomes tinted just sufficiently to allow of its being distinguished from the original white, and that after 30 minutes' exposure it attains its maximum density, which we will call *black*.

If this paper is used for printing from a negative of which the highest and lowest opacities are in the same ratio as the exposures required to give the darkest and lightest tones on the paper, that is, 1 and $\frac{1}{30}$th, a complete picture with tones ranging from pure white to full black will be obtained on exposing to light for a period of time slightly less than 30 times that required to give a faint tint under the lightest part of the negative.

In this way, none of the tone values of the negative are lost. The paper receives enough light to produce a black under the lightest parts of the negative, while the quantity of light transmitted by the densest parts is not sufficient to produce the slightest tint, but the paper is just tinted under the slightly less dense portions. Thus, any differences in density are faithfully reproduced in the same ratio on the positive print.[1]

If we wished to use the same sensitive paper with a negative the highest and lowest opacities of which are only in the ratio of 20 to 1, the positive print would not be able to give black and white simultaneously, while the steps between the successive tones would be considerably reduced. Instead of ranging from white to full black, all the tones would be comprised between white and a certain depth of grey, or between another grey and black. Actually, full black could only be obtained under the lightest parts of the negative after 30 times the exposure necessary to produce the first perceptible tint had been given, but with only 20 times this exposure the paper would have begun to darken under the densest parts of the negative.

Lastly, if we were to use a negative having highest and lowest opacities in the ratio of 40 to 1, with the same paper, we would obtain all the tones ranging from white to black, but a certain number of tonal values of the negative would be lost either in the light or the dark tones or at both ends of the scale at the same time. Actually, with an exposure giving a faint image under the densest parts of the negative, that is to say, an exposure 40 times that which slightly tinted the paper under the least dense portions, the paper would be completely blackened under all those portions of the negative of which the opacities are between 1 and $\frac{30}{40}$ths. If, in order to preserve the darker tones, the exposure had been stopped at 30 times that necessary to tint the paper under the lightest part, there would be no image under those parts of the negative where the opacities range between $\frac{1}{30}$th and $\frac{1}{40}$th. Thus a certain number of the light tones would merge into the white of the paper.

All that has just been said for print-out papers applies equally to other papers, i.e. those giving a silver image by development or a pigment image of any kind.

503. The ratio of the quantities of light which respectively give the darkest tone and the lightest tone which can be distinguished from white, for a given photographic paper, is often called the *total gradation* or *gradation* of the paper.[1] We have just seen that to obtain the best rendering from a paper, the prints must be made from a negative of which the contrast (the ratio of the highest and lowest transparencies or opacities of the negative) is equal to or less than[2] the gradation of the paper in question.

[1] The blackness, or reflection density, of a point of an image on an opaque support is the logarithm of the ratio of the light intensities normally diffused at the surface by a white and by the area considered, both illuminated under an incidence of 45°.

With very rough papers it will be noticed that the density of a given area varies when the paper is turned in its own plane: the density passes alternately from a maximum to a minimum, according to the orientation of the fibres relatively to the plane of incidence of light; it is then necessary to take the mean of the two extreme values (R. E. Owen and T. D. Sanders, 1933).

[1] More accurately, the *working gradation* rather than the *total gradation*, is taken as denoting a paper, as the latter includes the complete tonal range of the paper from pure white to full black. The working gradation of a paper is the range from a very light grey, below which differences in luminosity of 10 per cent cannot be differentiated, to a very dark grey, above which details of luminosity of 25 per cent cannot be distinguished (E. Goldberg, 1923).

[2] It may be pointed out that it is not always necessary, nor is it even desirable, to make use of the complete tonal scale from white to black which is obtainable from a method of positive printing. In dull weather the tone values of a landscape range between light and medium grey, with no full blacks nor whites. In the same way, in the portrait of a sitter in light clothing, the scale of tones is often comprised between white and a medium grey. Thus only a fraction or part of the available tonal range of the paper need be used to reproduce the subject as it is seen, and it has been shown in the preceding paragraph that this condition is fulfilled if the gradation of the paper is greater than the contrast of the negative.

The table given below is a rough indication of the average gradations of various types of sensitive paper. It also indicates the range of extreme transparencies of negatives usually termed weak, vigorous, etc.

Fortunately, a certain amount of latitude exists. Thus, a dark grey often appears black by contrast with a light tone, while on the other hand, the sacrifice of a few details in the shadows of the picture does not always spoil the effect.

Average values for the gradation of various papers		Ratio of highest and lowest opacities of various types of negative	
Very contrasty papers	1 : 10	Very flat	1 : 5
Soft gaslight papers	1 : 20	Flat	1 : 10
Bromide papers	from 1 : 40 to 1 : 60	Average	1 : 20
Print-out papers	1 : 60	Vigorous	1 : 40
Carbon tissues	1 : 80	Very vigorous	1 : 60 and over
Platinum papers	1 : 100		

But the principle should be laid down, viz., that every variety of sensitive paper corresponds with an optimum ratio of highest and lowest opacities for the negative, and that no negative can give equally satisfactory prints on papers having different characteristics.

As it is impossible always to obtain negatives of the same character, except when working under strictly identical conditions, it is well to have two or three varieties of paper of different gradations at one's disposal, and to choose the paper which suits each negative best. The judicious choice of paper is one of the essential elements of success in photographic printing.[1]

This rule does not apply when printing on transparency plates of any kind. The latter can be used with very varied types of negatives by suitably regulating the exposure and time of development. For this reason transparency plates are not supplied in various degrees of contrast[2] as in the case of papers.

504. Printing Frames and Machines. Printing may be done either in a printing frame or in a printing machine or box, the latter being a more or less complicated form of printing frame combined with a box containing a source of light.[1]

These pieces of apparatus are essentially intended to ensure as perfect a contact as possible between the negative and the sensitive positive paper throughout the printing, complete protection of the latter from any light other than that transmitted by the negative, and to prevent any relative displacement of the two surfaces, which would produce a double image. Further, in the case of sensitive paper, etc., on which the image appears during exposure to light, one should be able to note the progressive "building-up" of the picture at any time, so that the printing can be stopped at the right moment.

The chief advantage of a printing box over a frame is that the dark-room is not illuminated with white light during printing. In this way many precautions which would otherwise have to be taken are dispensed with, and several operators can then work at the same time. The usual type of printer, in which the negative is illuminated by diffused light, is not suitable for printing when making reproduced negatives or transparencies on rigid supports (positive plates). Defects in the plane surface of the glass never permit of two plates being in complete contact over their whole surface,[2] and for this reason a perfectly sharp print can only be obtained if

[1] On silver print-out papers and on very contrasty development papers, both of very good quality, it is sometimes possible to obtain prints in which, especially in the shadows, there can be perceived *details of luminosity* not perceptible when looking at the subject photographed, the ratio of the two luminosities involved being slightly increased.

[2] Whereas the density and contrast both combine to increase over a long period when a transparency plate is being developed, the maximum contrast is attained almost at the beginning of development in the case of papers. This is due to the fact that in examination by reflected light, the number of densities which can be distinguished from the maximum black attainable are very limited.

[1] In passing, the automatic machines for commercial printing on reels of paper should be mentioned. These are generally combined with mechanical equipment for developing, fixing, washing, and drying the paper continuously. There are also semi-automatic machines with which a considerable number of prints can be made on paper in the roll or sheet form, after which the prints are either finished on a continuous machine, or sheet by sheet in the usual way.

[2] A glass negative does not press against the glass of the frame except at a limited number of points around which there are sometimes seen by reflection coloured fringes (Newton rings) of which the outline may be recorded in the prints. The formation of these rings can be avoided by interposing a matt-surfaced film with the matt side in contact with the back of the negative.

we use a small source of light, fixed in position relative to the frame and far enough from the latter for it to be considered as a point source of light.

505. In France the standard type of printing-frame for print-out papers is the so-called *French* frame, represented diagrammatically in Fig. 180. A piece of white plate glass, about $\frac{1}{4}$ in. to $\frac{1}{3}$ in. (6 to 8 mm.) thick[1] and free from bubbles and scratches is placed in a hard wood frame with deep rebates. The negative to be printed is then placed face upwards on the glass support, then the printing paper, the sensitive surface in contact with the film of the negative (with or without a mask between), then a resilient pad of thick cloth, felt, or spongy rubber (failing this, several thicknesses of soft tissue-paper); and, lastly, the back, consisting of two or more hinged panels, is placed in position. The pressure-bars are then closed and fixed in position.

With a frame of this kind, the state of the picture can be ascertained by disengaging one of the pressure-bars, opening the corresponding flap, and gently lifting the pad and the paper.[2]

Various simplified types, called English or American frames, for sizes up to 7×5 in. (13×18 cm.), are not fitted with plate glass, or only with thin plate or ordinary glass if they are used for printing film negatives. Their inside dimensions should then be only about $\frac{1}{25}$ in. (1 mm.) larger than the negative. As the bars of such frames are usually fixed in position by turning them in a plane parallel to the back, there is always a risk of moving the back, and consequently the paper on which it is resting. Any risk of movement can be prevented if the pins of the hinges extend from the back into grooves in the frame.

A special type of frame, in which the back is fixed to the frame with well fitting hinges, is used in the few cases when the sensitive layer is coated on a rigid support (transparencies, or opal print-out plates), or again in cases where the support of the sensitive layer is too soft to be replaced in exactly the same position on the negative after it has been lifted up for examination (silk and other sensitized fabrics[1]). The negative is fixed in the frame, and the sensitized material on the back. Similar frames have been used, which allow of a transparent or translucent film (§ 516) being interposed between the negative and the sensitive paper during printing.

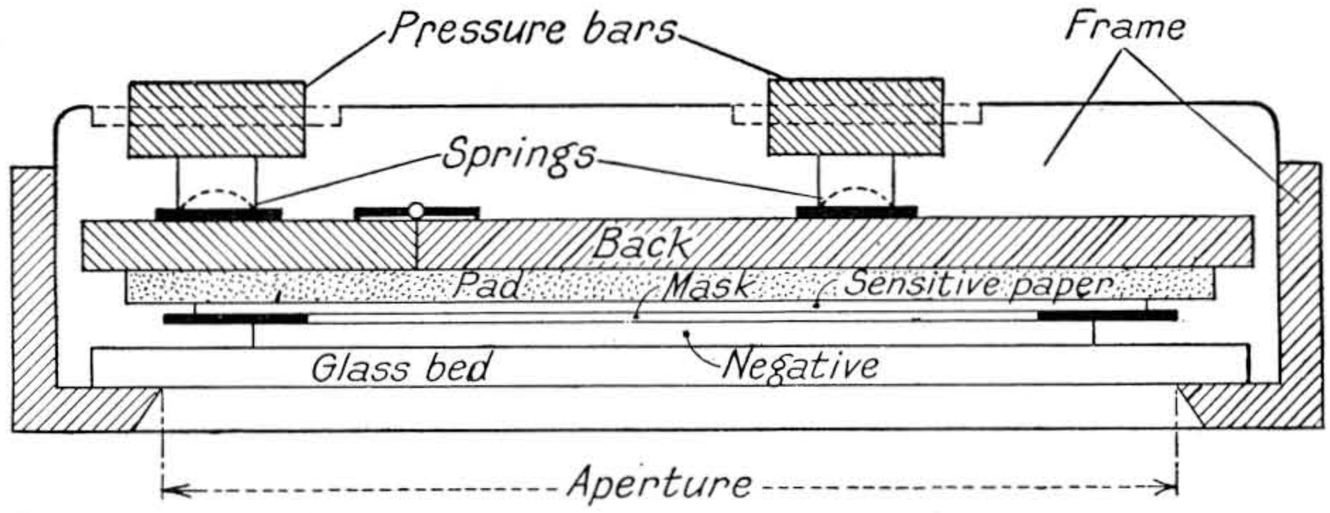

FIG. 180. PARTS OF A PRINTING FRAME

Prints which are made on development plates and papers, or carbon papers, where it is not necessary to judge the visible progress of printing, do not require the use of a frame with a divided back and separate fastenings; the opening and closing involve unnecessary operations.

Various types of printing-frames with solid backs are obtainable with which several prints may be made from a part of a large plate with the certainty that the picture will be identical on each print (e.g. when printing on post cards or transparency plates). The same result can be obtained by using a printing-frame fitted with a piece of stout glass, and temporarily fixing a piece of thin cardboard to the negative, into the opening of which the sensitive plate or card fits closely.

For making prints of tracings on ferro-prussiate or similar papers by artificial light,

[1] To allow for expansion of the glass when printing in the sun or near an electric arc light, there should always be an appreciable clearance between the glass and the frame. Because of the method of pricing plate glass (in France) the measurements of the latter are usually in multiples of 3 cm. ($1\frac{1}{5}$ in.). In frames used for photo-mechanical reproduction where a considerable pressure is given by levers or screws, the plate glass is replaced by a transparent slab of glass which can be as thick as $1\frac{1}{4}$ in. (30 mm.). In such cases the frame is strengthened with metal binding.

[2] In small frames, where the back consists of only two pieces, it is an advantage to have the hinges a third or a quarter along its length, so as to allow of a larger part of the picture being examined. Frame bars which are automatically bolted with spring catches should also be mentioned. Again, there are certain patterns of frame with metal strips fixed to the back, which take the pressure of the spring, facilitate the manipulation of the latter, and prevent their denting the wood.

[1] When using an ordinary printing frame, printing on fabric may be done by temporarily stretching the fabric and sticking it by its four corners to a piece of flexible card.

when the printing can be done with a constant exposure after preliminary trials if all the tracings have been made on paper of equal transparency, a frame is used consisting of two half-cylinders of glass fixed in a metal framework. The tracing and paper are held against this curved surface with a strong linen blind or apron, which is secured by stretchers. The illumination is provided by a tubular lamp (mercury arc) fixed on the axis of the cylinder, or by an arc lamp which slowly moves up and down, with a correctly adjusted uniform motion, along a vertical line coinciding with the axis. In large studios, continuous machines are also used, the tracings and papers being carried along over a half-cylinder of glass by an endless belt, moving at a speed adjusted to the sensitivity of the paper.

Lastly, in photo-mechanical work (photogravure, photozinco, etc.), a *pneumatic* printing frame is used the back of which takes the form of a woven rubbered cloth edged with soft rubber grooving, which is pressed against the glass of the printing frame by another frame with lever bars. By means of a vacuum or water-pump, the space between the glass and the apron is exhausted, the sensitive surface being then held against the negative by the pressure of the atmosphere. The pressure being thus balanced on both sides of the glass, the latter can be much thinner than in printing frames in which the glass receives a mechanical pressure on one of its sides only.

506. At the present day, in order to ensure a rapid and regular output in a professional studio, printing on development papers is done almost exclusively in printing boxes, the first models of which appeared about 1900.

A printing box consists essentially of a printing frame placed horizontally [1], at a height which is convenient for a standing operator, on a box light-tight but amply ventilated, enclosing the printing lamps and a red or yellow lamp (or an ordinary lamp in a light-tight lantern fitted with a red or yellow glass or flexible filter), allowing the paper to be placed correctly on the negative. The pressure-bar which is worked either by hand or by pedal, is locked automatically at the end of the stroke.

The printer is often fitted with a switch which, when the back is in position and the paper in complete contact with the negative, switches the current from the red lamp to the white lamps—and back to the red lamp as soon as the back is released.[1] The use of such a switch is only advisable for current of low intensity. When using heavy current for printing on slow papers (400 watts or over) a switch should never be used unless operated by a carefully constructed relay. In all cases, red sight-holes should be provided to allow of inspection of the white lamps.

Very often the lighting of the white lamps is controlled by a timing device which is released either by the closing of the back of the printer or by hand pressure on a lever. The exposure is then regulated over a wide range either by a clockwork mechanism or by the escape of air or glycerine from a small orifice (as in a gun brake).[2] Rather than attempt to regulate the exposure by altering the cross-section of the orifice from which the air or fluid escapes—a method which is always uncertain in its results—it is nearly always preferable to keep the latter fixed and to adjust the time by moving a contact on the travel of a solid plug or block on the piston of the pump. With some printers the bolt which maintains the pressure on the back is

[1] Certain types of printers, which are especially designed for film negative printing, have the glass bed on a slope like a desk, and are then fixed at a reasonable height for a seated operator. The films are kept in position by automatic claws gripping on the upper edge and operated by pressure of the foot on a pedal. A further set of claws, controlled by another pedal, then hold the paper in position until the back has been adjusted in its place (Crayssac, 1922). The advantage of a printer of this kind is that the sloping glass prevents dust from accumulating underneath the negative or between it and the paper, the dust sliding easily off the glass surface. Some printers used for the production of amateurs' prints comprise an automatic numbering machine fixed in the back, which prints the number of the order on the backs of all prints belonging to the same customer. The pressure of this numbering machine must be applied only *before* the printing exposure is made, or it must be weak enough not to cause the number to appear as a light imprint in the image (§ 199).

[1] Non-electric printers are fitted with a single lamp arranged behind a shutter, consisting of a frame containing a yellow or red glass or filter, the frame uncovering the light by operation of the pressure back.

[2] A device which is not difficult to make and ensures identical exposures for a series of prints from the same negative in an ordinary printing-frame is the following: The frame is placed in a movable framework behind a vertically-fixed panel, the latter carrying a slit the height of which is variable, and behind which is placed the lamp. The framework and frame are balanced almost but not quite exactly by a counter-weight connected to the framework by cords passing over fixed pulleys, and descend and pass always at the same speed behind the slit. When the frame is taken off to change the paper, the framework reverts to its starting-point (Kodak Co., 1909).

automatically released as the white light is cut off.

In order to allow of modifying the illumination on the various parts of the negative by the interposition of suitably-shaped pieces of translucent paper, the printer is usually fitted with a sliding frame just underneath the glass negative bed. This frame is fitted with a piece of ground glass on which any shaped pieces of paper may be placed as desired. Besides regulating the exposure times, nearly all printers allow of the illumination being varied at will by altering the distance between the lamps and the diffuser. In this case a number of suitably scaled positions should be marked out, corresponding, for example, to illuminations which

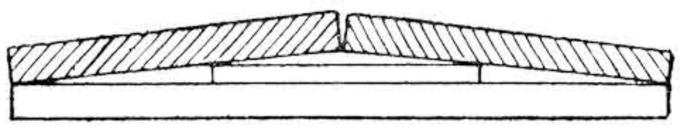

FIG. 181. FAULTY CONTACT OF PRESSURE BACK

are double each other. Again, it is useful to be able to control the various white lamps separately,[1] or to move them in a plane parallel to the diffuser, so that the illumination in various parts of the negative can be relatively increased.

The beds of some printers are fitted with a number of stops which can be removed at will, and which allow a suitably-sized sheet of sensitive paper to be adjusted to such positions that six or twelve pictures can be made in regular succession on it from the same negative. If the exposure is automatically regulated by the printer, one can be certain that the prints will develop up identically, and consequently the images will be of the same depth. Other more complicated types are fitted with a movable carriage carrying the sheet of paper and which stops automatically in predetermined positions. Lastly, there are printers which are provided with spools for making separate prints from film negatives in the whole strip, the film being moved for each successive exposure.

Blurred patches, caused by defective contact, and often noticed on prints which have been made in a printer, are frequently due to insufficient pressure along the join between the two halves of the back. If there is excessive pressure on the sides of the latter, the defect is accentuated by a thick negative of very small size (Fig. 181). This difficulty can be overcome by placing the negative in a cardboard frame of about the same thickness as the negative. Blur which occurs in different positions in successive prints from the same negative is often due to air pockets formed between the sensitive paper and the negative when the pressure pad is not slightly convex. This fault can often be avoided by passing the back of the paper over a hard wooden edge in such a way as to make the sensitive surface slightly convex.

507. Light-sources for Positive Printing. Printing on print-out papers is nearly always done by the amateur in diffused daylight, but the control of printing is complicated to a great extent by the considerable variations which often occur in daylight from one minute to another. As normal production must be always possible, even in very dull weather,[1] most large establishments usually make use of arc lamps (preferably arc lamps consuming 80 to 90 volts, i.e. enclosed arcs) or mercury-vapour lamps (§ 294), as sources of light for printing. In such cases frameworks are provided to take a fairly large number of frames arranged symmetrically round the lamp. In this way nearly the whole quantity of light emitted is utilized.

Printing on development papers should be carried out with much less powerful lamps.[2] Incandescent electric lamps are generally used for the purpose, and according to the sensitivity of the papers usually employed their intensity should be neither too great nor too small. In this way both very short exposures, which are difficult to time and repeat correctly, and long exposures, which slow down the work, are avoided. The fact that the distance between the lamp and the negative has a considerable influence on the illumination (§ 13), and consequently on the exposure, should not be overlooked. To avoid too considerable local varia-

[1] When the lamps are mounted in screw sockets a quarter turn of the lamp which it is desired not to light is sufficient.

[1] In rainy weather daylight printing is only possible under a glass roof.

[2] A lamp which does not allow of being turned on and off frequently can be used in the following way for bromide printing: there are one or two precautions to be taken, one being not to work too near a light-coloured wall. The lamp should be placed inside a lidless box, the bottom of which is wholly or partly formed by yellow or red paper or glass, so forming a primitive dark-room lamp. The top of the box should be cut away and replaced by a metal box, which is pierced so as to allow the hot gases to escape without letting out too much light. The printing frame is placed in front of the open side of this box for exposure, and is loaded in the shadow of one of the solid sides. Sensitive and exposed paper is placed in a drawer which is only opened for a very short time.

tions in illumination, the distance between the source of light and the negative should never be less than the diagonal of the negative.

The voltage of the current supplied by electric light companies varies very considerably at different times of the day, being generally at a maximum in the daytime and at a minimum at dusk. As variations in the voltage considerably influence the visual intensity of the emitted light, and still more its actinic intensity (§ 292), it is advisable to keep a voltmeter in the printing room, so that, as the result of a few tests, the volt-meter can be graduated in terms of equivalent exposure, arbitrarily assigning the value 1 to the exposure corresponding with the normal voltage specified by the supply company.

For a small number of exposures on slow sensitive material (gaslight papers, warm-tone plates), the light afforded by the burning of a suitable length of magnesium ribbon is sometimes used. The ribbon is fixed on the end of a needle and lighted with a spirit lamp. The light of the latter has very little photographic action and can be left in a fixed position so as to mark the distance chosen for the combustion, the magnesium ribbon being removed from the flame as soon as it has begun to burn.

508. Actinometers and Light Integrators. When using sensitive materials, such as carbon tissue, which do not allow the degree of exposure to be judged by the eye, for printing in a variable light such as daylight, the time of exposure to light must be regulated by means of an actinometer. In this way the quantity of active light received by the frame may be approximately determined.

A strip of sensitive print-out paper is exposed under a density scale in a small printing frame. The density scale may consist, for example, of about ten thicknesses of translucent paper placed on top of each other, each piece being about half an inch shorter than the preceding one. The number of superimposed thicknesses is then marked on each step of this scale with indian ink (or any other opaque ink which is without action on the sensitive surface). After exposure to light for a certain time the number of figures which appear light on a ground of greater or less depth can be read off on the test strip.

In preliminary trials for the determination of the correct exposure, this actinometer is loaded with a fresh strip of paper, and the whole placed by the side of the printing frame, both facing the same way. When printing is stopped, the last readable number on the strip is noted. In this way an equivalent exposure can be made at any time, or the exposure adjusted as required, by exposing the frame for the time required for the same number to appear on the actinometer. The relationship will hold good as long as the strips of sensitive paper are of the same make (and batch), and undergo no change or deterioration.[1]

In industrial installations these exposures are controlled by placing the photo-electric cell of a light-integrator (§ 325, footnote) alongside the printing frame and in the same plane as the sensitive surface.

509. Effect of Illumination on Gradation. With a considerable number of sensitive papers, the contrast of the print is affected in large measure by differences in the intensity of the illumination used for printing (it being understood that the time of exposure is adjusted so that the same result[2] is produced each time). It is not possible to formulate any general rules in this matter.

By analogy with a phenomenon which has often been noticed with print-out papers, it is frequently thought that weak illumination always results in increased contrast. With certain gelatino-bromide papers, however, the contrast has been found to be independent of the illumination, while with others the contrast is reduced when light of low intensity is used (Ilford Laboratories, 1925).

A few systematic tests made by printing the same negative, on strips cut from the same piece

[1] The fact that the effects of very weak and very strong illuminations are not proportional on a bichromated film and on paper sensitized with silver salts has sometimes been raised as an objection to this type of actinometer. This objection, which is more theoretical than practical, may be overcome as follows: strips of white notepaper are sensitized by immersion in a 3 per cent solution of potassium (or ammonium) bichromate, dried in the dark and used for testing. Two long pieces of glass, e.g. 1 × 10 in., are clipped together with strong rubber bands, after a piece of opaque paper has been gummed on the inside and over *nearly* the whole length of one of them. One strip of bichromated paper is placed between with the end slightly protruding from the glass, and the whole exposed to light until the part which is protected only by the glass has turned brown. To use this actinometer, the sensitive strip is drawn out a little way, and the time which the fresh portion takes to acquire the tint of the previously darkened portion is taken as unity (*degré Artigue*), after which a fresh section of the paper is pulled out, and so on.

[2] The phenomenon already mentioned (§ 202, footnote) of the lesser relative activity of weak illumination is especially marked with positive development emulsions.

of paper, at very different distances from a constant source of light will clearly show if variations in illumination can exercise any appreciable influence on the paper which is being used.

510. Effect of Colour of the Printing Light on Contrast. It has long been known (Lehmann, 1861) that prints of different contrasts are obtained if a negative is printed on the same print-out paper through differently-coloured filters.[1] An analogous effect is known to occur very readily in all printing processes based on the properties of bichromated gelatine.[2]

In particular with print-out papers, where silver chloride is the principal sensitive material, the contrast of the image may be slightly increased, especially in the lighter tones, by printing under a light yellow filter, while a considerable reduction in contrast may be obtained by printing under a green or violet filter.[3]

It should be noted that the effect of the colour of the light may be very different from the examples given above when the negative is coloured instead of being of a neutral tint (e.g. when the negatives are developed with pyrogallol).

511. Calibration of the Negatives. The calibration of negatives does away with all trials for the choice of a printing paper of suitable gradation, and for the choice of the best exposure when printing is effected in a reasonably constant light. It results in a considerable saving of time and materials. For this calibration it suffices to measure by means of an appropriate photometer (densitometer), which is either an independent instrument or forms part of the printer, the density of two suitably chosen areas of the negative. Contrary to instructions sometimes given, these areas are not always the most opaque and the most transparent. In the case of a portrait for instance, the image of a white garment or of a reflection from a jewel should not be chosen, the best lit portion of the face being adopted for representation by a grey which is almost pure white. In a landscape or interior including very marked shadows full detail in the latter will not always be required, and the density will be measured in the image of the deep half-tone that it is desired to render as a dark grey scarcely different from black.

The difference thus measured between the two densities is equal to the logarithm of the gradation of the paper, a characteristic which it would be very desirable to see makers indicate on each packet. The instructions for some densitometers give average values for some papers in current use; it is easy to determine it by testing a sample from each batch under a calibrated sensitometric screen.[1]

Knowledge of the maximum density, or at least of the greatest density requiring consideration, permits the optimum printing exposure to be chosen. If we know in well-defined conditions of illumination (intensity of light source and its distance from the sensitive paper) the exposure necessary with a given paper, with a given development, to obtain a very light grey scarcely different from white, under a known density (e.g. under a sensitometric wedge), then we can calculate the exposure required for the same grey under any other density (other conditions being the same), the ratio of the two exposures being the number whose logarithm is the difference between the two densities considered.

If, for instance, the optimum exposure was 12 seconds under a density 1·5, the exposure under a maximum useful density 1·9 will be obtained by *multiplying* the exposure of the test (it would be necessary to *divide* if the new density were lower than that of the test) by the number 2·5, which is the anti-logarithm of 0·4, the difference between the two densities compared. Hence the new exposure is 12 × 2·5 seconds, or 30 seconds.

[1] In the case of colourless sensitive layers which are progressively coloured by the action of light, this phenomenon has been explained as follows (L. Cazes, 1897): according as the radiations transmitted by the colour-filter are transmitted or absorbed by the coloured image, so the protection which it exercises with respect to the parts underlying the sensitive layer is lessened or increased.

[2] In this case the phenomenon has been ascribed to the orange colouration of the sensitive coating and its considerable absorption of violet and particularly ultra-violet light. Moreover, the effect is more marked when the sensitive coating contains more bichromate, being consequently more deeply coloured.

[3] The necessary filters can be made by staining a plate which has been fixed in hypo, washed and dried, by immersion for about fifteen minutes in a 0·2 per cent solution of auramine (yellow filter) or in a 0·25 per cent solution of methyl violet (violet filter), the plate being then allowed to drain and dry (F. Formstecher, 1925). In practice a green filter cannot be used, as it considerably retards the appearance of the image when used deep enough to be effective.

[1] This logarithm is the product of the *constant* of the wedge used (increase of its density per centimetre) by the distance, measured in centimetres on the test print, between the lightest grey differentiated from white and the darkest grey differentiated from black.

The calibration data or their practical application (type of paper to be used and regulation of the exposure counter or rheostat) should be written in one of the margins of the negative.

512. Modes of Printing. A negative may be *printed in solid*, the paper being entirely covered by the picture (at least after trimming), or printed *under a mask*, so as to leave narrow or wide white or tinted margins, or, again, *vignetted*, the tones of the image passing imperceptibly from their full intensity to the white or tinted base of the paper.

It is always possible to improve certain parts of the picture relatively to others during printing by local variations either of the illumination or of the exposure. In this way the effect of *working-up* the negative can be supplemented, or dispensed with altogether.

There are various methods by which too great a sharpness of the image can be avoided, the effects of a sharp and diffused print being proportionally combined as required (§ 313), while excessive contrasts in a photograph can be lessened by breaking-up the uniformity of the masses of shadows.

Images can be combined in various ways, such as the introduction of a background or sky after the usual printing, surrounding the picture with a toned border, or in other ways.

513. Contrivances for Printing. The masks used to protect the sensitive paper during printing are generally made of black paper free from pinholes or thin parts, sometimes of very thin red celluloid, or sheets of tin-foil. Celluloid has an advantage in that it can be adjusted more easily on the negative, the image being visible through the mask. Foil is seldom used except in certain processes of photo-mechanical reproduction where the print is on a rigid support. It can be used very much thinner than celluloid or even paper, and there is less risk of blurring being caused by bad contact.[1]

Cut-out masks[2] can be bought in various shapes and sizes—rectangles with rounded corners, ovals, circles; also fancy shapes, the use of which is not always pleasing. Such masks are usually supplied with their corresponding opaque counterparts or *counter-masks*. The counter-masks can be employed to obtain black margins on a print which has been already fully printed, by means of a second printing, the print being exposed under the counter-mask.

A mask may also be cut out with a penknife to any required shape, or, if a rectangular opening with sharp corners is required, it can be made by sticking strips with clean-cut edges on to the gelatine surface of the negative itself.

When printing from film negatives, the mask may be inserted between the negative and the glass of the frame instead of between the negative and the sensitive paper.

In photographic establishments where amateur's work is undertaken, it is the practice to supply the print with a narrow white margin, without, however, any trouble being taken to select the best opening or the most suitable position for the mask on the negative. In such cases a *frame mask* or *border mask* is generally used. One side of the mask is covered with a thin card, cut out to the size of the negative, which is thus automatically centred on the opening. When a border mask is to be used for printing on large-sized paper or card, e.g. for printing small negatives on post cards, the paper may be adjusted more easily in the opening if another cut-out card is used, or clearly visible register marks are made on the existing mask.

514. Printing with a Tinted Border. Pleasing effects may be obtained by surrounding a picture which has been printed on a larger size of paper with variously-sized borders or edgings in grey of different intensities. These effects can be obtained by means of a combination of masks carefully cut and accurately marked in relation to the sensitive paper.

In Fig. 182, *A* and *B* represent a mask and counter-mask respectively, the latter being of slightly larger dimensions (from $\frac{1}{8}$ in. to $\frac{1}{4}$ in.) than the opening in the former, so that, when printed under a negative, a print is obtained with wide margins, which, with the exception of a thin white edge (about $\frac{1}{8}$ in. in width), will be of light or medium grey tone when exposed under the counter-mask.

For printing film negatives both the mask and counter-mask should be stuck in corresponding positions on pieces of glass slightly larger than the sensitive paper to be used; the position of the latter is exactly determined by means of a "square" cut out of thin card and fixed along two sides of the glass to serve as a stop.

For printing from glass negatives the masks should be fixed in a cardboard frame the opening

[1] It has often been suggested that rectangular masks be made of four thin strips or screens, which can be moved along the four sides of a frame or printer.

[2] A mask can be fixed temporarily on a negative so as to avoid any movement when making a number of prints by placing a little rubber solution on the corners of the negative. The rubber can be afterwards rubbed off the negative and the mask with the fingers.

of which is cut slightly larger than the plate, and in which the latter can be fastened with gummed strips of paper, the gelatine surface of the negative being towards the mask, while the "square" edge serving as a stop for the paper is fixed on the other side.

Before such border-masks are mounted, the outlines of the picture and of each frame to be used should be drawn on a piece of stout paper. The attachment of the mask and counter-mask should be done by the aid of this guide-piece, one of the outlines being made flush with the side of each piece, after the guide-piece has been thrust as far as it will go into the cut-out square.

Surrounds of several borders of different tones can be easily designed, and effects similar to those obtained by multiple mounting with superimposed papers thus obtained. Instead of a piece of plain glass fixed to the counter-mask, it is possible to employ a negative reproducing the texture of a material such as coarse canvas.[1] Muslin or net can also be stretched on the glass.

As an example of the various effects obtainable in this way, a combination of mask and counter-mask is shown in Fig. 182, which allows of a grey border being made at some distance from the picture which is printed under the mask *A*.

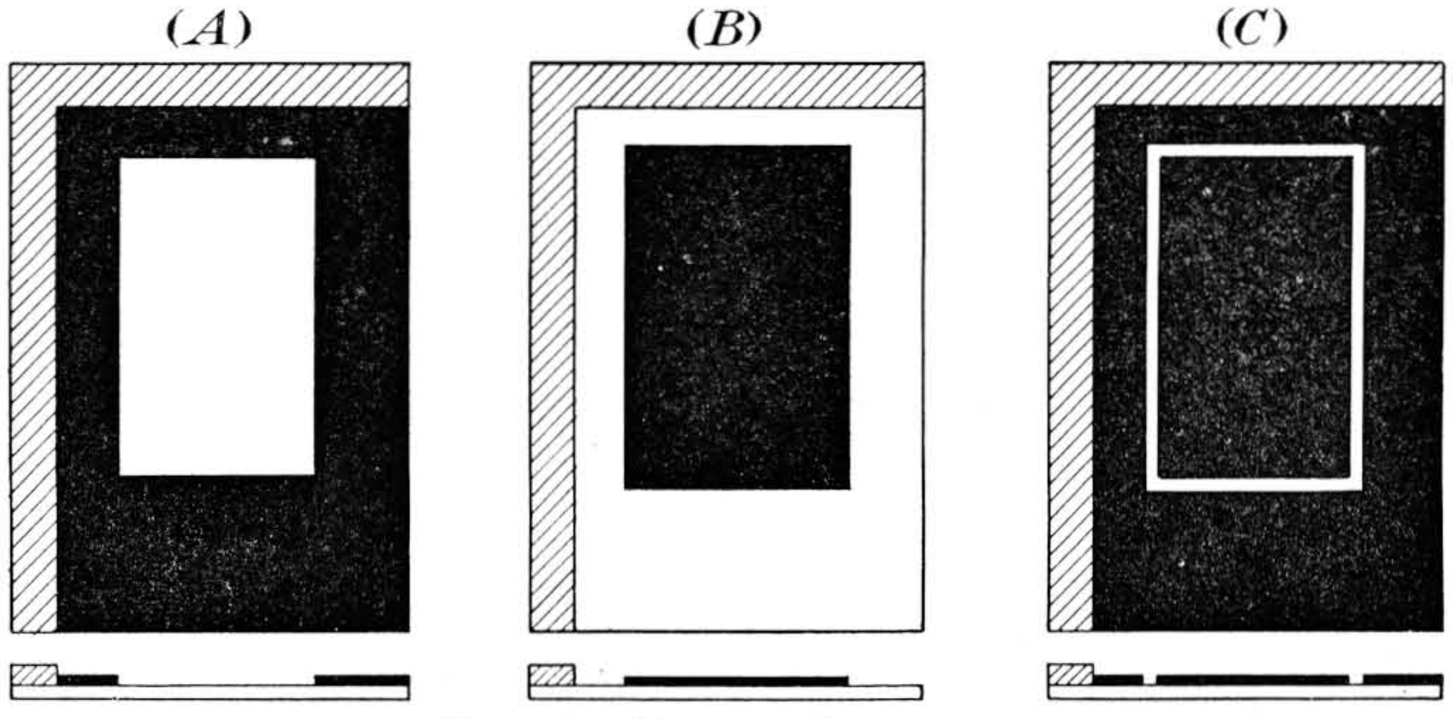

FIG. 182. BORDER PRINTING
A, mask; B, counter-mask; C, combined mask and counter-mask

515. Vignetting. Leaving aside the case of vignettes with a dark background (so-called Russian vignettes) which are made under a counter-vignetting mask during a second printing, vignetted prints can only give pleasing results if the subject has been taken in front of a light uniform or cloudy background without well-defined patterns.

Vignette printing may be done either with a glass or celluloid vignetting mask, which, except for a central portion, is coloured orange-red, or by a series of cut-outs of translucent paper placed one over the other, the edge of each coming about $\frac{1}{16}$ in. behind the edge of the preceding piece. A zinc or flexible cardboard vignetting mask, with a finely-toothed or saw-edged opening, may also be used, and lastly there are various types of home-made vignetters which are sometimes better suited to the shape of the subjects.[1]

Except when using a vignetter of ready-made gradation, vignetted prints should always be made in highly-diffused light, keeping the vignetter as far as possible from the negative, so as to produce a sufficiently large penumbral region ($\frac{1}{2}$ in. at least for average-sized pictures). In nearly all cases it is further recommended that a piece of ground glass or other diffusing material be placed above the vignetter.

Special care should be taken to ensure a perfectly diffused light when vignetting prints on developing papers. Failing this, instead of directing the frame towards the source of light, it may be turned towards a large white surface illuminated as uniformly as possible by one or more lamps, the direct rays of which are unable to reach the frame.

[1] Again, instead of the plain glass, a negative reproducing the signature of the author, a monogram, greetings, or a date or title, may be used, such inscriptions then appearing in white on the grey of the surround.

[1] There were also *iris vignetting masks*, consisting of a large number of thin plates or leaves each connected by a movable joint to a pivot in a light frame. These were used to produce openings of very varied shapes and sizes.

The simplest method of preparing a vignetting mask is to cut in a piece of cardboard an opening of slightly smaller dimensions than the portion of the negative to be retained. The opening is covered with a piece of translucent paper on which the outline of the unprotected part is lightly pencilled. Excellent results will be obtained if this mask is placed about 1 in. from the negative.[1] Another method is as follows: A counter-mask placed on a very uniformly illuminated opal or ground glass plate is photographed purposely well out of focus. The resulting negative will form a vignette of variable diffusion, which can be varnished or bound up with a piece of plain glass so as to prevent the gelatine surface becoming scratched.

516. Local Control During Printing. The effect of retouching or other work on the negative may sometimes be completed or supplemented by holding back the printing of certain parts of the picture.

If, when using a printing frame, a suitably shaped piece of cardboard is held in the hand at a little distance in front of the frame during a part of the exposure to light, its shadow will be thrown on those parts of the picture which it is desired to hold back. To prevent a sharp outline of the cardboard appearing on the print, it should be kept slightly moving to and fro, either in the same plane as the cardboard or perpendicularly to its own plane.[2] A frame with a translucent back has been used, so that the position of the shadow on the picture can be ascertained from the back of the frame.

517. Reducing Contrast and Definition. Besides the methods already described in § 313 for obtaining prints with softened outlines, the following method can be used to reduce the contrasts to a slight extent of a large picture, and especially of a picture containing large dark areas with little detail. During the whole or part of the exposure to light, an embossed film, a piece of closely-woven muslin or net, or even a film negative of average density of a definite pattern is placed between the negative and the sensitive paper.

For printing negatives whose range of densities is greater than the gradation of the softest paper available, the negative can be doubled with a positive of suitable contrast (§ 444, footnote). In the particular case of silver development papers, recourse may be had to the Sterry effect (§ 555, footnote) or to the Herschel effect (§ 571, footnote).

Besides the method of stylization already mentioned (pseudo-solarization, § 204), it has been suggested to limit as follows the scale of tones to a given number, say five, of grey tones (Isohélie). From the original negative the desired number of copies are made on very contrasty plates, each with a suitable exposure. These intermediate positives are intensified so as to constitute almost silhouettes. Finally, these are copied on thin films in such a way as to have only very slight density, and these negatives are then superimposed in register to form the ultimate negative (W. Romer, 1932).

518. Combination Prints—Insertion of Backgrounds—Adding a Sky to a Landscape. It is not possible to consider here every case in which a photograph can be "faked" by the photographer, for example, by introducing a figure into a group or scene, or by inserting into a landscape a foreground from another negative. These combinations are always made by cutting out the parts of the print to be transferred, thinning the edges of the paper, and sticking them on the print of the group or landscape, concealing the joints by a little retouching and finally photographing the composite picture.

Three operations which occur relatively frequently will only be considered here, viz., grouping of several portraits in one photograph, putting a background into a portrait, and adding clouds to a landscape.

For printing various portraits (the members of a family for instance) in desired positions on a single sheet of paper) made vignetted against a white background, a model on glass is made (as specified in § 855 for printing stereoscopic positives from separate negatives), and each of the negatives is fixed in suitable position on a glass of the same size as the desired photographs. When printing, this glass support and the sensitive paper (marked with pencil on the back to show the correct way) must be pushed up against the same corner of the printing frame or of the printing machine.

Film background negatives are sold which reproduce the standard types of professional backgrounds (draperies, cloudy backgrounds,

[1] This piece is often cut out of the bottom of an old box so that its sides serve to keep the opening at the required distance from the glass of the frame.

[2] When printing on papers in which the image is visible in a frame which allows the picture to be completely uncovered, another method is to paint the print itself by covering the sufficiently exposed parts with an opaque pigment (e.g. red or yellow water-colour), which can be washed off afterwards.

various interiors) of which the central portion is either completely transparent or completely opaque. In the first case the masks are superimposed on a portrait negative which has been taken in front of a plain and very dark background, the background and the subject being afterwards printed at the same time. In the second case, after exposing the paper under the negative of a portrait taken with a uniform white background (or blocked out afterwards to hide a defective background), it is exposed under the background negative, suitably proportioning the two times of exposure.

The sky of a landscape negative which has been taken on an ordinary plate is usually of such a density that, when printed, it leaves a uniform white expanse of paper. Taking into account the fact that, in the absence of clouds, the luminosity of the sky decreases the higher it is from the horizon, it is possible to improve such a picture considerably by slightly greying the sky with increasing intensity from the horizon to the upper edge. After making the print, it is exposed to light, and, at the same time, a piece of cardboard is moved in front so as to cover the picture of the landscape and expose the upper part of the paper for a short period of time (with development papers, mark out the position of the horizon and expose the paper at some distance from a weak source of light. This second printing can sometimes be done during development, immediately the image begins to appear).

Another method which is entirely disapproved of by some workers, but which has frequently been used by others with great success, consists in the introduction of the clouds of another negative into a photograph.[1] Film negatives of clouds may be obtained commercially, but the choice is extremely limited, while the use of such devices leads to undesirable repetitions. Further, such negatives have been made under entirely unknown conditions. Now, in order to introduce a sky into a landscape, it is not sufficient that the lighting has the same direction in both parts of the composite picture,[2] but the endeavour should be made to combine only negatives which have been taken with the sun at about the same height. (The curves in Fig. 169, § 326, show the times when the sun is at the same height.)

[1] Let us mention, but only to condemn the practice, the detestable faking which consists in introducing artificial clouds with the aid of tufts of cotton wool.

[2] A film negative of clouds can be used from either side according to the circumstances.

For this reason, landscape workers who make use of inserted skies nearly always form a collection of cloud negatives for themselves, together with particulars of the conditions under which they were taken. It is advisable to varnish such negatives, so as to avoid any alterations which might occur during the various processes of manipulation to which they are subjected.

Other more punctilious landscape workers make two successive negatives of the same landscape, with the times of exposure suitably adjusted to render the sky and landscape correctly. If the landscape has a satisfactory sky, it is simpler and more economical to photograph it on an orthochromatic plate with a suitable yellow filter, even if the exaggerated contrast which sometimes occurs when a sky is photographed in this way has to be reduced when printing.

Before going into the method by which the two images are combined, attention is drawn to the frequent fault of giving too great a density to the image of the sky. Except in stormy weather, the darkest clouds are always very much lighter than the shadows in the landscape. The exposure under the cloud negative should therefore be kept fairly short, so as to produce only a grey image.

Before proceeding to combination printing, a mask must be prepared to limit printing of the clouds to the parts which form the sky of the landscape. The counterpart of this mask should be used to mask the image of the sky on the landscape negative, if the sky tends to print out on the picture. This mask should be made by exposing a sheet of print-out paper under the negative of the landscape until the line of the horizon is readily visible. With a fine pair of scissors (embroidery scissors) this sheet of paper is very carefully cut along the line of the horizon, and the two pieces of paper left in the light until completely blackened.

The mask of the sky is then fixed on the back of the landscape negative, and the mask of the landscape on the back of the cloud negative, the blackened surface of the mask being uppermost. This work should preferably be carried out on a retouching desk. The masks are kept in position at several points with gum or rubber solution. Both printings should be carried out in diffused light.

If print-out paper is used, there is little difficulty in adjusting the paper, which already has the image of the ground upon it, under the cloud negative.

If development paper is used for the process,

register marks may be made on the negative, but it is simpler to proceed as follows: First expose the paper under the landscape negative and develop it. As soon as the image appears, stop development with a solution of sodium bisulphite before full density is attained; place the print on a piece of thin celluloid (unless the sky negative is varnished), and fix the whole in a suitable position behind the cloud negative. Make the second exposure, and replace in the developer, where the sky will develop up while the development of the ground is being completed. The relative times of exposure can be determined by making a few preliminary tests on pieces of the same paper.

A sky may be added to a transparency more simply, viz., by printing the cloud negative on a second plate, which afterwards takes the position and place of the usual cover glass.[1] The direction of the light in the cloud negative must be chosen with regard to the fact that the picture is reversed. This method allows an excessively dense sky to be corrected if necessary, by reduction, and simplifies the register marking of the two pictures. A sky may also be transferred to a positive transparency without any difficulty by the aid of a stripping positive paper.

519. General Hints. The glass of the frame or printer should be carefully cleaned on both sides, and the felt pads brushed before work is begun. The back of the negative should also be cleaned, if necessary.

Carefully place the negative correctly in the frame, with the gelatine side away from the glass support. Fix the mask, if any, in position and then the sensitive paper or plate, the sensitive side in contact with the negative, avoiding all contact of the fingers with the surface; keep the whole in position by pressure with the hand while the first part of the hinged back is fixed in place.

To avoid errors in the number of prints to be made when using print-out papers, and if no counter is available, as many marks as there are prints required should be chalked on the frame and one rubbed out after each print is made. For prints on development papers it is simpler to count out the required number of sheets of sensitive paper and place them in a separate box at the beginning.

In exceptional cases, where it is necessary to make a print from the reverse side of a film negative,[1] or even from a glass negative, parallel light or light from a point source at a great distance from the frame should only be used. If the printing is done in daylight, the frame should be placed at the bottom of a kind of long chimney made of a wooden framework covered with cardboard or paper, blackened on the inside, or lined with black material, the whole being turned towards the sky. When printing by artificial light, the source of light should be as small as possible, and the frame placed as far from it as is convenient without prolonging the exposure excessively. If an enlarging or projection apparatus which is fitted with a condenser is available, an almost parallel beam of light can be obtained by suitably adjusting the light-source. Printing can then be carried out nearer the lamp and with considerably shorter exposures.

[1] The transparency of the landscape can then be used as a mask when printing the sky by covering the transparency with black paper roughly cut to the shape of the horizon.

[1] A reversed image can be utilized for one of two portraits which are to make a pair, in case the best picture of each subject is facing the same way.

CHAPTER XXXVII

SILVER PRINT-OUT PAPERS

520. General. We shall consider here chiefly those papers in which the sensitive material is silver chloride associated with an excess of soluble silver salts (nitrate, and organic salts, such as citrate, tartrate, etc.).

According as the printing is carried out in weak or strong light, the colour of the image approaches blue-violet (the colour of image given by pure silver chloride), or red (the colour of image given by citrate or tartrate of silver; these salts are less sensitive, and so require a very strong light). The degree of humidity of the film considerably affects the colour of the image. A damp condition increases the sensitivity of the organic salts without affecting that of the chloride, and so, for a given exposure, the image is redder than that given by a dry film.

With these print-out papers the image consists of silver in a very fine state of subdivision (colloidal silver), adsorbed (solid solution) in the excess of silver chloride, and thus protected against certain reagents which attack metallic silver.[1]

The image is generally more contrasty when it has been printed by weak light than when strong light has been used (see § 510, effect of coloured light [2]).

If the exposure to light is prolonged sufficiently to saturate the remaining silver chloride, the silver which is liberated may appear on the upper surface of the film in a coherent state with a greenish metallic lustre; the image is then said to be *bronzed* or *metallized*.

Fixation of prints obtained by direct darkening occasions a general weakening of the image which is chiefly visible in the lightest tones. This effect varies with the type of paper and also, though to a smaller extent, according to the conditions of printing (colour and intensity of the light). This *regression* of the image makes it necessary in all cases to continue the exposure until a darker image than is required is obtained; a few preliminary trials will show the depth of printing required for retention of the finest details in the high lights.

During fixation the image becomes yellow [1] in colour and after drying acquires a disagreeable yellowish-brown colour. This is remedied by toning the image (before, during, or after fixing), that is to say, by substituting another metal (gold, platinum, etc.) for a portion of the silver, or by converting the silver into a coloured compound (e.g. selenium toning).

A very faint image on a print-out paper can be brought to a normal depth either by depositing silver on it by physical development (which, in this case, can be regarded as an intensification process), or by exposing the paper to an orange or red light.

521. The sensitive film of print-out papers is not affected in the least by the light which passes through a red, orange, or deep yellow filter, even on long exposure to sunlight, but the colloidal silver formed during a short exposure to light under a negative plays the part of a panchromatic sensitizer. The parts where an image has already been formed can, therefore, darken during a second exposure

[1] This solid solution of metallic silver in silver chloride has for long been considered as a definite salt, the sub-chloride of silver. It is now definitely established that silver sub-chloride does not exist and that the mixture (sometimes called the photo-chloride) can be obtained by coagulating a mixture of colloidal solutions of silver and silver chloride (Lüppo-Cramer, 1910). The amount of silver per unit area of a very intense black is extremely small. An albumen paper which, before treatment, has an amount of silver salts equivalent to 0·68 gr. of silver per square foot has only 0·09 gr. per sq. ft. after treatment (Haddon and Grundy, 1895). This amount of silver, if in the condition of metallic leaf of the same area (the thinnest beaten leaves that can be obtained are much thicker), would be almost transparent.

[2] It is interesting to note the possibility of increasing the contrast of an image printed on print-out paper by placing between the negative and the printing paper a yellow or red filter which is easily bleached by light and which, therefore, after a certain amount of exposure, becomes a sort of duplicate of the negative. A film impregnated with ferric thiocyanate may be used (G. Staess, 1917).

[1] The yellowing of the silver photochloride in the fixing baths is due to the transformation of the "colloidal silver—silver chloride" system into a new "colloidal silver—gelatine" system of much lower refractive power, so that the maximum of absorption is displaced towards the short wave-lengths (M. Savostjanowa, 1935). In drying, the tone darkens somewhat, the refractive power of the dry gelatine being slightly higher than that of gelatine swollen with water.

more where the silver has already been formed than in other parts. The second exposure to light thus acts as an intensifier (*continuing radiation.*)

This phenomenon, which was noticed in Daguerreotype images by E. Becquerel in 1840, and which was explained by Lüppo-Cramer in 1909, is of particular importance if soft prints are required from very vigorous negatives; in this case exposure under the negative should be carried just far enough to obtain full detail in the shadows.

The continuing action of yellow or red light can be used for increasing the contrast of an image which has been made from a negative with weak contrast, but in this case the second exposure should be made through the negative in order to graduate the intensification of the image (H. J. Channon, 1909).

522. Deterioration of Print-out Papers. The ageing of print-out papers containing soluble silver salts is shown by the appearance of a yellow colour, due to the spontaneous reduction of minute quantities of silver in a very fine state of subdivision. This yellow colour changes to brown and finally to black with a metallic lustre. This change does not occur in complete absence of moisture, and so these papers are generally packed in waterproof paper after having been dried and separated by sheets of straw paper which acts as a desiccating agent. The deterioration of print-out papers is very rapid when they are exposed to the action of certain gases and vapours (hydrogen sulphide, formaldehyde, hydrogen peroxide formed during the oxidation of resins, etc.).

These papers should be kept in a dry place, away from any chemical operations. These recommendations are particularly important in the case of opened packets.

If the colouration of the paper by age is not very pronounced, it disappears in the course of somewhat longer fixing, unless the fog has been "consolidated" by toning before fixing.

(*a*) Salted Paper and Albumen Paper

523. Salted Paper. Salted papers are sized with starch[1] paste containing a suitable quantity of chlorides and other soluble salts, which are sensitized after drying by floating on a solution of silver nitrate and again drying (de Brébisson, 1854). The keeping qualities of this paper are very limited, and it is suitable only for very vigorous[1] negatives; it is no longer a general article of commerce. The absence of any coating, other than the normal sizing of a good quality drawing paper, makes it possible to draw on the paper with pen or pencil; the photograph can thus be used as a guide and then caused to disappear when the drawing is nearly finished. Photographs on salted paper can also be worked up with water-colours; the image is faintly printed and toned to a neutral colour, which gives the outlines and gradation in the shadows.

The preparation of salted paper is one of the easiest of operations, but owing to its bad keeping qualities it is sensitized only in small quantities at a time.

524. Preparation of Salted Paper. Paper of good quality, suitable for water-colour painting, is first of all marked with pencil on the back to avoid subsequent confusion, and then pinned to a small clean board or stretched out on a drawing board. The salted size is then applied with a thin flat brush with cross-brushing. If the paper is of pronounced texture it is necessary to brush the size well into the cavities. Finally the coating is treated with a soft badger brush until it appears to be uniformly matt.

The size is best made with *arrowroot* (a starch chiefly used as a food-stuff). The amount required can be calculated on the basis of about 2 oz. (fl.) per 10 sq. ft., but allowance must be made for loss in working.

Grind about $\frac{3}{4}$ oz. (35 grm.) of arrowroot in a mortar with a small quantity of water, until a thick paste free from lumps is obtained. Dissolve separately 25 gr. (3 grm.) of citric acid and $\frac{3}{4}$ oz. (35 grm.) of sodium chloride (table salt) in 20 oz. (950 c.c.) of water. This solution is brought to the boil in an earthenware vessel, and the arrowroot cream is then added in small quantities with constant stirring with a stirrer or wooden spoon. Boiling is continued for a few minutes, and the mixture is left to cool; after cooling, the surface skin is removed.

As paper thus coated has good keeping qualities, a large quantity may be prepared for sensitizing when required.

525. Sensitizing must be done in the absence of white light; it is convenient to work at night by artificial light. The drying must be done in darkness. On the commercial scale a room

[1] The starch paste may be replaced by other sizes, such as resin soaps, in aqueous or alcoholic solution, agar-agar, etc. A more rapid paper can be obtained by using alkaline phosphate instead of chloride.

[1] By the addition of small quantities of potassium dichromate the contrast of the images can be increased, thus making it possible to use average or weak negatives

lighted by yellow glass windows, or the dark corner of a feebly lighted room is used.

The sensitizing bath is prepared by mixing[1]—

Silver nitrate (cryst.)[2] .	2 oz. (100 grm.)
Citric acid. . . .	1½ oz. (75 grm.)
Alcohol (90°) . .	1½ oz. (fl.) (75 c.c.)
Water, distilled, to make .	20 oz. (1,000 c.c.)

The solution is poured into a perfectly clean glass dish and should be about ½ in. deep. The paper is caused to float on the surface of the bath face downwards by lowering it gradually; it is then removed to make sure that it is uniformly wetted and re-floated with the same precautions. After about five minutes the sheet is lifted by one corner and withdrawn from the dish; by drawing over a glass rod, most of the adhering solution is removed. The paper is allowed to drain for a few seconds and is then put to dry in the dark. The clips used for hanging the paper from the drying line should have been previously soaked in melted paraffin to render them impermeable. Drippings from the papers should be caught by any waste paper available, the ashes being afterwards added to the silver residues. The dry paper should be packed and kept in a dry place.

The *silver bath* may be used repeatedly; in proportion to its use, it becomes poor in silver and rich in nitrate of soda; the presence of this latter salt makes the readings of a Baumé hydrometer, which is sometimes used for estimating the concentration, entirely misleading.

A used bath can be frequently revived by the addition of fresh solution of somewhat greater strength, but after a time it is necessary to discard it and to recover the silver.[3]

[1] Dissolve each solid separately in a part of the water, mix and then add the alcohol.

[2] Nitrate of silver is supplied either in the form of colourless crystals or as cast white or grey masses (lunar caustic); its density is 4·35. It is very soluble in water (more than 60 per cent at 32° F.), and slightly soluble in strong alcohol. Silver nitrate deposits black stains of metallic silver on the skin or on other organic matter (cloth, wood, etc.) when acted on by light. These stains may be removed by successive treatments with tincture of iodine (or iodine dissolved in potass. iodide) and strong solution of hyposulphite of soda.

[3] Silver is recovered by the addition of sodium carbonate, which precipitates the silver as silver carbonate. This can be converted into silver nitrate by adding nitric acid and evaporating. If one does not carry out the recovery oneself, the old silver bath is best added to used fixing baths, to avoid increasing the number of operations.

526. Use of Salted Papers. Prints on salted papers which are intended only to act as guides for drawing are simply fixed; after the drawing is finished the image is destroyed by immersion in one of the "surface" reducing solutions previously mentioned (§§ 458–460). The paper is then washed and dried.

In all other cases the image usually has to be toned. While toning can be done after fixing, it is quicker and gives more regular results if done before fixation.

Gold toning is best done in an alkaline bath, and notably by "chalk toning" (§ 534); black tones can be obtained by toning with platinum (§ 538) after previous partial toning with gold.

Economy of the toning bath can be effected by washing the prints in several changes of water before toning; a preliminary treatment in a chloride solution, recommended below for emulsioned papers, considerably slows the toning of prints in a gold toning solution which contains no solvent of silver chloride.

Fixing should be in an alkaline solution and should be followed by washing in plenty of water.

527. Albumenized Papers. From 1850 until 1890 almost all photographic printing was done on albumenized paper (Blanquart-Evrard, 1847). Smooth paper was floated on the surface of a solution of albumen (white of egg) containing sodium chloride and citric acid. The paper was supplied ready for sensitizing, in the manner already described for salted paper (§ 525), or ready for use. The introduction of emulsion-coated print-out papers caused the gradual disappearance of albumenized paper, as commonly used.

Meanwhile papers sized with vegetable albumen, with casein and with other colloids, have appeared under the name of *matt-albumen paper*, and were used chiefly by professional portrait photographers. These papers require negatives which are much less vigorous than those for printing on to the older type of albumen paper, and softer still than those for salted paper. They are usually prepared by coating a sensitive emulsion on to the paper, and the method of use is, therefore, similar to that recommended for emulsion-coated print-out papers. But the sensitive film is much less coherent, and all rubbing should be avoided, particularly when the prints are wet.

528. Sensitizing Silk. The working methods for sensitizing silk fabrics do not differ from those

employed in the preparation of salted paper, except in the choice of a sizing material. This latter must be removed in the course of the various operations in such a way that the normal appearance of the fabric shall be preserved. A mucilage of lichen (moss) is usually prepared for this purpose in the following manner—

Infuse 45 gr. (5 grm.) of Iceland moss (pharmacist's moss) in about 20 oz. (1,000 c.c.) of boiling water; decant and filter the solution (which should be of a thin, syrupy consistency) while hot. In 18 oz. (900 c.c.) of the filtered solution dissolve 350 gr. (40 grm.) of sodium chloride (kitchen salt) and add 2 oz. (100 c.c.) of glacial acetic acid to keep down all fermentation of the infusion. Keep the mucilage in a corked bottle.

Pour the solution into a perfectly clean dish and float the pieces of silk (which should have been previously marked on the back with pencil) on the solution, taking care to remove air bubbles and to prevent the liquid reaching the back of the material. This is done by taking the material by two opposite corners and allowing the tip of the loop to touch the liquid first; the corners are then lowered gradually until the whole is touching the liquid. After about two minutes the material is removed from the bath by taking hold of two adjacent corners; it is dried by pinning to a stretched cord.

The pieces of material, which should be thoroughly dry and free from any smell of acetic acid, are then floated for about two minutes on the silver bath already described for salted papers (§ 525), drained, and dried.

As the image on silk is more or less buried in the fibres, the contrasts suffer, so that a vigorous negative is called for, particularly with material with a pronounced grain.

After printing, with the precautions specified in § 506, toning follows, and then fixing in the manner described for salted paper. After washing and drying, the tissue should be smoothed with a hot iron. Such tissue can be cleaned when need arises by the methods which would be used for the plain material itself.

(*b*) Gelatine and Collodion P.O.P.

529. Print-out Silver Emulsions. Print-out emulsions are made on the commercial scale by the precipitation in gelatine (gelatine P.O.P.[1] Abney, 1882) or in collodion (collodion papers, G. Wharton-Simpson, 1865) of silver chloride (or sometimes bromide or phosphate of silver), together with citrate, tartrate, or oxalate of silver. The unwashed emulsion contains an excess of silver nitrate in addition to the salts resulting from the double decomposition (nitrates of potassium, lithium, strontium, etc.).

These emulsions are coated mechanically on to baryta-coated paper.[1] The resulting paper should always be packed film to film, each successive pair being isolated with straw paper.

Collodion paper—and, still more so, the gelatine paper—requires negatives much less vigorous than those required for salted paper. Certain varieties of collodion paper, prepared with emulsions containing silver chromate (the film is yellow or orange, according to the quantity of chromate present), are made for medium or weak negatives (*contrasty papers*).

Collodion papers give a much richer image and are more suitable for warm, black tones by successive tonings with gold and platinum. In warm climates these papers have the advantage that they can withstand baths and washing waters at a temperature which would cause the coating of the gelatine P.O.P. to melt.

The castor oil, which is often added to collodion emulsions to give suppleness and to avoid risk of cracking, is sometimes a cause of trouble through being present in excess; in these circumstances it is difficult to make the various baths wet the surface of the film. The same trouble sometimes arises when glycerine has been used to give suppleness, if the glycerine has, in the course of time, soaked out into the paper support. Immersion in denatured alcohol before attempting treatment in any of the baths will make the film penetrable to the solutions (J. Gaedicke, 1911).

530. Use of Collodion and Gelatine P.O.P. With the exception of the proofs sent out, on these papers, from portrait studios,[2] the papers are either toned prior to fixing or toned and fixed

[1] The contraction P.O.P., used in England for emulsion print-out paper, originated with the Ilford Co. on their taking up the first manufacture of this type of paper in England. On the Continent, the term "aristotype" is still used to denote the gelatine variety, as distinguished from the collodion, of print-out paper.

[1] The paper for print-out emulsions is made chiefly from rags (clippings from lingerie and sail-making workrooms, and old rags that have been cleaned and sorted out).

[2] These prints are made without any regard being paid to the loss of depth which would occur on fixing; they cannot usefully be toned or fixed. In some cases they bear a rubber-stamp impression (made with a colourless, greasy varnish), which renders any treatment impossible.

simultaneously in one bath (§ 541). For separate gold toning the alkaline baths recommended for salted and albumen papers can be used for gelatine papers, although their actions are very slow. But they are almost without action on collodion papers; these latter should be toned in a bath containing a solvent of silver chloride, e.g. sulphocyanide or thiocarbamide (§ 536 and 537), which can gradually make a way through the slightly permeable film of collodion.[1]

As in the cases of the papers already considered, an economy in the toning solution can be effected by preliminary washing; or, if it is intended to recover the silver residues, the soluble salts can be held in the film until fixation by treating with a bath of salt followed by careful washing.

Fixing, when carried out separately, is best done in an alkaline bath.

531. Print-out Papers from Old or Fogged Development Papers. Gelatino-bromide or gelatino-chloride development papers, which, for one reason or another, have become unsuitable for their proper purpose, may be converted into print-out papers by soaking them in a weak solution of silver nitrate (about 0·5 per cent) or in a solution of a reducing substance such as sodium or potassium nitrite (about 5 per cent), salts of hydrazine, various developers, sodium sulphite, stannous chloride, etc.

After soaking for some minutes, the paper is placed to dry in the dark without any preliminary washing. The same treatment can be applied to negative plates and films.

The method of using is the same as for gelatine print-out papers.

(*c*) Manipulation of Print-out Papers[2]

532. The Printing-room. The loading of the printing frames, the control of the exposure, and the unloading of the frames should be done in a room lighted with yellow light or in any place where the illumination is weak.

On the commercial scale, one side of the printing-room is usually lighted by yellow windows and the other by plain glazing; the dry paper is handled and the first operations are done by yellow light, whilst other treatments, from fixation onwards, can be carried out in white light. Frequently the same dark-room is used for washing prints made on development papers. When it is necessary to work by artificial light, the ordinary lamps are used; for judging toning, a lamp with a blue glass bulb, giving a light similar to daylight, should preferably be used in order that the tone may be more exactly judged.

If printing is by daylight the room should communicate with the outside or with the glazed enclosure in which the negatives will be exposed; when artificial light is to be used, the lamps and the bench for the printing frames should be installed in the printing-room, to save coming and going.

533. Gold Toning in Alkaline Baths. The immersion of a photographic print in a solution of pure gold chloride[1] would result in the substitution of gold for some of the silver constituting the image, but the resulting image would be very weak, particularly in the lighter tones. This weakness does not occur with solutions in which the yellow *auric* salt has been converted into the colourless *aurous* salt which, when replacing the silver of the image, deposits three times as much gold per unit amount of silver as the auric salt. Now, in an alkaline medium, auric compounds change progressively into

[1] Collodion papers (and particularly the glossy varieties) curl to a roll in the first bath into which they are placed. This can be avoided as follows: Place the prints face downwards into a dish containing a very small amount of liquid and spread them irregularly over the bottom of the dish in such a way that they are in contact with each other. Almost all the liquid should have been absorbed by the time that the last print to be treated has been put in. Let the liquid drain away by squeezing the pile of papers against the bottom of the dish. After 5 or 10 minutes the prints will be flat, and it will be possible to proceed with washing; in cold weather, warm the water slightly.

[2] See Chapter XXXIX for recommendations regarding the washing and drying of prints; these working methods are common to all types of photographic papers containing silver salts.

[1] The *gold chloride* of commerce is actually chlorauric acid ($HAuCl_4 \cdot 3H_2O$), and occurs in the form of yellow deliquescent masses (sometimes coloured brown by the addition of small quantities of iridium salts to satisfy a demand arising from the belief that the brown-coloured gold chloride is better than the yellow), very soluble in water, alcohol, and ether. The best qualities contain 50 per cent of gold, but unfortunately products having a much smaller gold content are sold (gold chlorides exist which have a gold content varying from 50 per cent to 20 per cent in 5 per cent stages) without any indication of the difference in quality, and without there being a difference in price commensurate with the amount of active material present. The chloraurates of sodium and potassium ($KAuCl_4 \cdot 3H_2O$), and ($NaAuCl_4 \cdot 2H_2O$), which are deliquescent and of which the gold content rarely exceeds 40 per cent, are also prepared commercially under the description of double salts of gold and potassium or sodium. The aqueous solutions of these various salts are quite stable if they are not in contact with organic matter; they should be prepared with distilled water and should be kept in ground-stoppered bottles.

aurous compounds; these, however, may pass over into the inactive aurite state in the absence of soluble chlorides or if the bath is too alkaline.

The colour of the toned image depends essentially on the speed of the toning, which, in its turn, depends on the alkalinity of the bath. An acid bath gives images which tend to be red (finely divided gold), while a bath which is alkaline results in images which tend to a purplish brown, which may even approach black (gold in a less finely divided condition). Toning baths of a moderate temperature should be used. A bath which is either too hot or too cold does not give such good tones as one which is at a temperature round about 65° F.

534. Toning baths can be made alkaline by using one of a number of salts which have a feebly alkaline reaction; fused sodium acetate,[1] borax, disodium hydrogen phosphate, etc., may be used. These salts give the same results when they are employed in quantity sufficient for the bath to be equally alkaline in each case. The following solution, for example, may be used—

Sodium acetate, fused	90 gr.	(10 grm.)
Borax	9 gr.	(1·0 grm.)
Gold chloride (1% solution)	4 drm.	(25 c.c.)
Water, to make	20 oz.	(1,000 c.c.)

(A 1 per cent solution of gold chloride is made by dissolving the contents of a 15-gr. tube, as sold, in 3 oz. of distilled water). The solution may be used after standing for about one hour. The used bath can be kept, but it is necessary to add small quantities of gold chloride from time to time.

The most definite means of ensuring the constancy of the composition of the bath is to use *chalk toning* (H. de Molard, 1851); the insoluble calcium carbonate is kept in the bath and does not react except as required. The following method of working is recommended (E. Lamy, 1897)—

First of all, the following mixture is prepared with shaking—

INACTIVE BATH

Whitening (powder)	45 gr. (5·0 grm.)
Gold chloride (1% solution)	1 oz. (50 c.c.)
Warm water (about 100° F.), to make	20 oz. (1,000 c.c.)

The bath will become colourless on cooling; *it should not be filtered*. When required for use, decant the necessary volume of this liquid, and for each 100 volumes of the inactive bath add two volumes of 1 per cent gold chloride solution. When the toning is seen to be slowing down, more gold chloride should be added. The used bath is replaced in the inactive bath stock bottle and shaken up with the chalk.

The washed prints are placed one by one into this bath, and pass from an initial red-brown through dark brown and purplish-black to purplish-brown. Toning may be stopped at any stage, and after fixing, washing and drying, the print will be red-brown, warm black, or pure black; slight variations will occur from one paper to another. As the prints reach the desired tone they should be removed one by one and placed in water, where they may be left until sufficient have accumulated for fixing.

535. Sulphocyanide Toning. If a solution of a thiocyanate[1] (sulphocyanide) is added progressively to a solution of a gold salt, the red precipitate of auric sulphocyanide which is at first formed re-dissolves in the excess of sulphocyanide to give the complex colourless sulphocyanide. This double salt slowly (or rapidly under the influence of heat) changes into aurous sulphocyanide.

These solutions can be used for toning print-out papers (Meynier, 1863), and, under certain conditions, to be explained later, development papers also (§ 593). Tones which are almost black can be obtained by replacing the sulphocyanide by thiocarbamide or thiourea[2] (A. Hélain, 1902).

As these compounds are solvents of silver chloride, a fresh toning bath attacks the silver chloride image to some extent, causing very rapid toning. In addition, the finished image may have a very much greater proportion of gold in it than it would have had if it had been

---

[1] Fused sodium acetate (CH_3COONa) occurs in white or grey fibrous masses, which give a neutral or feebly alkaline solution, while crystalline sodium acetate (colourless crystals) usually contains a certain amount of free acetic acid.

[1] The sulphocyanides of ammonium and potassium (NH_4CNS and $KCNS$) occur as small colourless deliquescent crystals, very soluble in water and alcohol; the dry salts should be kept in hermetically sealed bottles; the solutions keep fairly well. In the preparation of toning solutions ammonium thiocyanate is generally preferred.

[2] Thiourea ($(NH_2)_2CS$), which results from an intermolecular change in ammonium sulphocyanide by heating under definite conditions, occurs as small colourless crystals soluble in cold water (9 per cent), and very soluble in boiling water and in alcohol. Both the solid and its solutions keep well.

toned in an alkaline[1] bath; these properties are obviously not to be found in an old bath saturated with silver chloride. It seems well established, however (R. E. Blake Smith, 1913), that the toning is not due exclusively to the gilding of the image, but that a small portion at least is due to sulphuration during the fixing, which follows the toning; the tone is modified considerably in the process of fixation[2] after the solution of the silver chloride is complete, and the image becomes first a yellow-brown, and then slowly changes to purple.

536. As the sulphocyanide toning bath is very readily exhausted, and as its action is very rapid even when the solution is weak, the best method of working is to use only the amount of chemicals corresponding exactly with the treatment of a given number of prints, according to the method long recommended years ago by the Eastman Kodak Co. for gelatine P.O.P.

Prepare two stock solutions—

A. Gold chloride .	17·5 gr.	(2 grm.)
Water, to make .	20 oz.	(1,000 c.c.)
B. Ammonium sulphocyanide	175 gr.	(20 grm.)
Water, to make .	20 oz.	(1,000 c.c.

and according to the number of prints to be toned, and having regard to the colour required, take of each solution A and B—

For 12 Prints 7 × 5 in. (13 × 18 cm.)

Purplish-black.	*Purplish-brown.*	*Sepia brown.*	*Deep sepia.*
3½ oz. (100 c.c.)	2 oz. 5 dr. (75 c.c.)	2 oz. 1 dr. (60 c.c.)	1 oz. ½ dr. (30 c.c.)

Add water in sufficient quantity for it to be possible to tone all the prints together. For 12 prints 7 × 5 in. the total volume should be about 18 oz. (500 c.c.), e.g. the toning bath for purplish-brown is: A, 3½ oz.; B, 3½ oz.; water, 11 oz. The bath thus mixed is ready to be used after it has stood for two hours.

[1] F. Novak (1902) has found the following gold : silver ratios for images which have been thoroughly toned—

Albumen paper toned in a bath made alkaline with borax	1 : 4·3
Collodion paper toned with gold sulphocyanide	1 : 0·25 to 1 : 0·85
Collodion paper toned and fixed simultaneously	1 : 1·14 to 1 : 2·00

[2] A more exact idea of the tone of an image can be obtained by examining it by transmitted light.

The washed prints are placed in the bath one by one, and are kept constantly in movement during the whole time of toning to avoid their sticking together. According to the nature of the paper, the depth of the prints, and the dilution of the bath, the time of toning will vary between 5 and 15 minutes. Toning may be arrested by placing the prints in a 3 per cent solution of sodium chloride (table salt); the prints may remain in this solution until they are transferred to the fixing bath.

Very varied colours may be obtained with gelatine print-out papers (but not with collodion paper) by adding small quantities of potassium iodide to the toning bath (A. Hélain, 1901). The weight of iodide must not exceed six times the weight of gold chloride used. This maximum dose gives carmine tones; reddish tones are obtained by using less iodide. The general yellow colour of the coating, which is caused by the conversion of a portion of the silver chloride into iodide, disappears during fixing if the hyposulphite solution is strong enough and if sufficient time is allowed.

537. Thiourea Toning has the advantage that the solution is ready for use directly it is prepared, and keeps well; further, the toning of half-tones and shadows proceeds simultaneously, so that it is possible to stop toning at any moment; with sulphocyanide toning the lighter tones are toned more quickly than the shadows.

The complex salts formed by thiourea with gold and silver salts are stable only in an acid medium; moreover, the double silver salt splits up in dilute solution and gives silver sulphide, so that there is a danger of staining the prints when washing them between the toning and the fixing operations. If it is desired to keep the toned prints between toning and fixing, they should be put in water slightly acidulated with an acid (e.g. boric acid, which is without action on hyposulphite).

The following formula gives excellent results. Tartaric acid should be used for gelatine P.O.P., and citric acid for collodion papers—

Sodium chloride .	175 gr. (20 grm.)
Thiourea (1% solution)	1 oz. (50 c.c.)
Tartaric or citric acid	4½ gr. (0·5 grm.)
Gold chloride (1% solution)	1 oz. (50 c.c.)
Water, to make .	20–40 oz. (1,000-2,000 c.c.)

538. Platinum Toning. Platinum toning (suggested by Caranza in 1856, and used in a slightly

different manner by J. Reynolds in 1886) was used, in the days before platinum had attained its present prohibitive price, to obtain beautiful black or warm black tones on matt albumen and matt collodion papers which had been previously toned with gold to a brown colour.

The platinum salt used for toning is potassium chloroplatinite.[1] Toning would be very slow and irregular if this salt were not used in acid solution; the speed of toning depends on the acidity, and not on the actual acid used, but it is necessary to avoid certain acids (such as acetic, boric, formic, and tartaric) which cause more or less rapid decomposition of the bath. Phosphoric acid had long been recommended, but it has no special advantage and its commercial solutions are of uncertain concentration. The best acid to use is sulphuric, or, failing that, sodium bisulphate in equivalent amount (§ 364, footnote).

Potassium chloroplatinite .	9 gr. (1 grm.)
Sulphuric acid diluted in 10 times its volume of water. .	1 oz. (50 c.c.)
Water, to make . .	20 oz. (1,000 c.c.)

This bath can be used until the platinum is almost completely (90 per cent) exhausted (Lumière and Seyewetz).[2]

Prints toned with platinum should be well washed in several changes of water, and then *fixed in an alkaline fixing bath.*

Almost identical results can be obtained by substituting potassium chloropalladite for chloroplatinite; this salt gives nearly twice the effect for the same weight.

539. Selenium Toning. The use of selenium in the form of seleno-sulphate[3] (with ammonium chloride added) for toning print-out papers was suggested in 1912 by P. Rehländer as being more economical than toning with gold and platinum. Even with papers which have been well washed to remove the soluble silver salts, toning with sodium selenosulphate tends to stain the whites of the images very strongly. This trouble can be obviated, when toning is done after fixing and washing, by adding a small quantity of sodium hyposulphite to the toning solution (Lumière and Seyewetz, 1924). This procedure greatly increases the speed of toning. The tones obtained vary from dark brown to red,[1] according as the image is coarse or fine grained; this toning gives (with certain papers) an appearance of platinum toning when used on a print which has been toned with gold and fixed.

Sodium selenosulphate may be obtained by dissolving 260 gr. of powdered selenium in 20 oz. (30 grm. in 1,000 c.c.) of a warm 20 per cent solution of anhydrous sodium sulphite.

Twenty to 50 minims of this solution are added to 20 oz. of a 30 per cent solution of hypo (2 to 5 c.c. per litre of hypo solution). The smaller quantity is used for toning albumen papers and the larger for emulsion papers (gelatine or collodion P.O.P.). The bath is limpid, colourless, and keeps well.

Toning is very rapid, taking from 2 to 5 minutes, according to the degree of exhaustion of the bath. This toning solution is very economical; 35 oz. (1,000 c.c.) will tone 80 prints 7×5 in. in size, and the results are highly permanent if washing is properly done.

540. Fixation of Print-out Papers. The chemistry and the mechanism of fixation are the same as for negative emulsions (§§ 400–401), but, as we shall see in connection with washing, the baryta-coating of the paper considerably retards the subsequent removal of the hypo.

Acid fixers, which tend to weaken the detail in the high-lights of the prints, and concentrated solutions, which cause blisters in the washing process, should be avoided. To avoid the excessive swelling of gelatine liable to occur in a

[1] Potassium chloroplatinite (K_2PtCl_4) occurs in the form of small prismatic red crystals, very soluble in water (about 15 per cent in the cold) and insoluble in alcohol; the pure salt contains about 46 per cent of platinum metal; it is unaffected by the atmosphere. The stock solution should be prepared with distilled water and kept in a glass-stoppered bottle in the dark.

[2] The ratio of platinum to silver when no previous gold toning has taken place may vary from 1 : 0·42 (matt albumen paper) to 1 : 0·34 (collodion paper).

[3] Selenium, which in many of its properties resembles sulphur, appears usually as grey crystalline masses; in a fine state of subdivision it is generally red. The alkaline selenosulphates, and particularly the sodium salt (Na_2SSeO_3), have a constitution which is closely analogous to that of the hyposulphites ($Na_2S_2O_3$), the selenium replacing a portion of the sulphur. Just as thiosulphate is obtained by dissolving sulphur in a hot solution of sulphite, so selenosulphate is obtained by dissolving selenium in hot sulphite solution. As selenosulphate is not made commercially it must be prepared as required by dissolving selenium. Solutions of selenosulphates should be kept in full bottles, well stoppered to avoid conversion into inactive selenotrithionates by oxidation; they are more stable in presence of sodium sulphite or hyposulphites. Analogous compounds of *tellurium* have also been used for the toning of silver prints.

[1] The ratio (1 : 0·88) in a long while toned print is greater than that for silver selenide (Lumière and Seyewetz). The selenium is deposited on the silver without combining with it until each grain of silver is completely enclosed in selenium (§ 594, footnote).

neutral bath, an alkaline bath is used. This has the advantage that, if toning has been done in an acid bath, there is no risk of sulphiding.

The following, for example, may be used—

Sodium hyposulphite, cryst.	2 oz. (100 grm.)
Soda carbonate, anhydrous	9 gr. (1.0 grm)
Water, to make . .	20 oz. (1,000 c.c.)

A bath of this kind becomes exhausted very rapidly, and must be frequently renewed.[1] The serious worker should use two fixing baths, for the reasons already given (§ 406), and the question becomes one of great importance in the case of print-out papers, owing to the extremely finely divided condition of the silver of the image, which renders it very susceptible to any destructive influence.

Although, in warm weather, collodion papers are to be preferred to gelatine papers, the gelatine of the latter can be hardened in an alum fixing bath, having first made sure that the paper will not leave a greenish tint after fixing and washing. The following bath may be used—

Hyposulphite of soda, cryst.	2 oz. (100 grm.)
Acetate of soda, fused .	90 gr. (10 grm.)
Chrome alum . . .	45 gr. (5 grm.)
Water, to make. . .	20 oz. (1,000 c.c.)

The solution is prepared by dissolving each ingredient separately in a portion of the water, mixing the alum and the acetate of soda solutions, and pouring the mixture into the hyposulphite solution.

541. Combined Toning and Fixing. Although suggested in 1850 by Le Gray, combined toning and fixing baths were not employed until about 1890, when emulsion-coated print-out papers came into general use. These were the first papers suitable for the combined treatment.

It is generally assumed that prints toned in combined toning and fixing baths last for a relatively short time. It is true that many examples of prints which have proved perfectly permanent after this treatment can be produced, but it is also a fact that these cases are largely exceptional, owing to the deplorable conditions under which these combined toning and fixing solutions are generally used, and owing also to the fact that there is nothing to show when a bath of this kind has been exhausted. Even when all the gold has been exhausted (assuming that there is any gold in the solution; this is not the case in all toning solutions commercially provided ready for the use of the amateur). the baths continue to tone; and it tones even when satisfactory fixing is no longer possible.

The prints cannot be permanent unless the toning has effectively gilded the image, and unless the fixing is perfect; these conditions are very rarely combined. The combined toning and fixing solution should contain an effective amount of gold, and should not be used for more than a very limited number of proofs. Finally, it is essential to follow with a separate fixation.[1] This latter is particularly essential when the required tone is obtained within a very short time of immersion in the solution, as in this time it is impossible for the fixation to be complete.

542. Reactions in Combined Toning and Fixing Baths. Combined toning and fixing baths usually contain as essential constituents hyposulphite of soda, alum, a lead salt, and gold chloride.

The reactions between the constituents of the bath themselves and between the constituents and the silver of the image have been studied chiefly by E. Valenta (1892), and A. and L. Lumière and A. Seyewetz (1902–12), but they have not yet been completely elucidated.

Gold chloride in presence of sodium hyposulphite is converted into a double hyposulphite of gold (aurous) and sodium (the salt of Fordos and Gélis, which was formerly used for toning Daguerreotypes). A mixture containing only these two constituents tones paper prints very slowly and gives only reddish tones.

The toning is accelerated and improved by the addition of a lead salt which, with sodium hyposulphite, gives a double hyposulphite of lead and sodium. The lead in this condition can deposit on the silver, both metals being

[1] As there is no visible indication that a fixing bath has become exhausted, it should be replaced when about 3 sq. ft. of paper (e.g. 11 prints 7 × 5 in.) have been fixed per 20 oz. of solution. This is equivalent to 50 sq. dm. of paper (20 prints 13 × 18 cm.) per litre. A test should also be made as indicated in § 408.

[1] A considerable economy in combined toning and fixing baths can be effected by previous fixing of the prints (R. Namias, 1908). Failing this, the precaution already recommended of washing the prints in plenty of water before the toning and fixing should be taken, or, alternatively, they should be treated with salt solution and briefly rinsed.

partially sulphided. A mixture of hyposulphite of soda and a lead salt forms a combined toning and fixing solution which yields very beautiful tones, but prints thus toned change very quickly. A print toned with lead only and then transferred to a gold bath fixes the gold very rapidly; it would seem that the lead compounds previously formed in the image act as mordants. It seems that in a combined toning and fixing bath, containing hyposulphite, gold chloride, and a lead salt, the last-named acts as an intermediary and accelerates the deposition of the gold on the silver; it does not appear in the finished image. A very small quantity (0·05 per cent) of lead salt is sufficient to obtain a maximum effect, and the nature of the soluble lead salt has no effect on the tone nor on the speed of toning. Acetate or nitrate of lead[1] is usually used.

We have already studied the action of the alums on hyposulphite (§ 403). The alum and hyposulphite solutions are usually prepared separately and mixed at a boiling heat. Under these conditions the reaction between the two salts is incomplete, and several days are required for equilibrium to be reached. A mixture of this kind, without addition of other substances, tones prints by sulphiding the silver; but only dull colours are obtained, and prints thus toned are not very permanent, for the finely divided silver sulphide which is formed is not as resistant to atmospheric action as is the coarse-grained silver sulphide formed by toning development papers. After the addition of gold chloride the mixture tones somewhat more quickly than the double hyposulphite of gold and sodium, but the tones are not as good as those obtained in the presence of a salt of lead. Owing to the presence of salts of lead, the black sulphide of which is insoluble, ordinary combined toning and fixing solutions contain no sulphide; the toned image nevertheless contains a little silver sulphide. It appears that the thionates, formed by reaction in hot solution between the alum and hyposulphite, convert the lead into the most active form for assisting toning.

[1] Crystalline acetate of lead ($(CH_3COO)_2Pb$, $3H_2O$), commonly called sugar of lead (Fr. salt of Saturne), occurs in the form of colourless dense prismatic crystals, very soluble in cold water (more than 50 per cent), and effloresing slowly in air.

The nitrate of lead ($Pb(NO_3)_2$) is not very different in appearance; it is a little less soluble in water (about 25 per cent), and is unaffected by the atmosphere.

Solutions of these salts in ordinary water are milky owing to the formation of chloride, sulphate, and carbonate of lead from the corresponding calcium salts. Lead salts are *poisonous*.

Combined toning and fixing mixtures supplied in a dry state do not always contain alum; the solution in cold water of those which contain alum results in an unstable liquid which constantly deposits sulphur. The amount of lead is generally increased in these cases in order to convert the sulphides into lead sulphide; this is precipitated with the sulphur as a grey or black deposit.

Toning takes place only in a neutral or acid medium; it is impeded by alkali, and also to some extent by sulphites and bisulphites. Ammonium sulphocyanide is sometimes added to combined toning and fixing solutions; these solutions could also be made with thiourea or its derivatives instead of hyposulphite, but without any particular advantage.

543. Preparation and Use of Combined Toning and Fixing Solutions. The addition of gold chloride to these solutions should be postponed, if possible, until shortly before the solution is required for use. The following solution is first prepared—

Sodium hyposulphite, cryst.	4 oz. (200 grm.)
Alum	130 gr. (15 grm.)
Lead acetate *or* nitrate .	18 gr. (2 grm.)
Water, to make . .	20 oz. (1,000 c.c.)

The three solids are dissolved separately; the alum and the hypo solutions are brought to the boil and mixed boiling. A bulky precipitate is formed with evolution of sulphur compounds. After complete cooling, the solution of the lead salt is added. After several days' standing the solution is filtered; no further precipitate will form.

Shortly before treating the prints, the required quantity of solution is taken and to it is added the gold chloride (1 per cent) solution in the proportion of one volume of the gold solution to 20 volumes of the stock solution. Approximately 4 oz. of solution is necessary for 20 prints 7×5 in. in size; this number may be increased to 25 if the prints are fixed before treatment. Should this be the case, the bath may be diluted to facilitate the immersion of the prints. As far as possible a quantity of solution greater than is necessary for the number of prints to be treated should not be used, and a fresh bath[1] should be employed for each batch of prints.

[1] In hot climates, and to obtain hardening of the gelatine more completely than that obtained with the solution given above, the following solution, prepared

For satisfactory permanence, prints must be given an extra fixing.

544. Development of Partly-exposed Prints. Print-out papers with a soluble silver salt in the emulsion can be developed physically (§ 395) to give their normal depth after an exposure of only from one quarter to one-tenth of that required for a fully-printed image, using only the silver salt actually present in the sensitive film (Blanquart-Evrard, 1850). This method is applicable only to paper of fresh manufacture which has been kept under perfect conditions and which has been handled only in artificial light or very weak daylight; the less the degree of printing, the more strictly do these conditions apply.

From the very mechanism of this reaction it is obvious that the print should not be washed before development. Also, dilution of the silver salt in the developer should be avoided as far as possible. As it is necessary to use a perfectly clean dish, one of glass should be chosen. A dish can be dispensed with, however, by placing the print face upwards on a sheet of glass larger than the print, and then covering it with developer by swabbing it rapidly with a plug of cotton wool.

The colour and the contrast of the developed image vary considerably with the type of paper used, the depth of the original image, the actual developer chosen and the degree of acidity of the mixture. Lightly-printed images generally give prints with very poor contrasts.

The following developer (E. Valenta, 1914) may be used—

Citric acid . . .	150 gr. (17 grm.)
Metol . . .	35 gr. (4 grm.)
Hydroquinone . .	53 gr. (6 grm.)
Water, to make .	20 oz. (1,000 c.c.

This solution keeps very well in well-stoppered bottles, and is diluted for use to from 10 to 25 times. Preliminary tests should be made on pieces of print to determine what dilution is best for the actual paper used.

When the image has reached the desired depth, development is stopped by immersing the print in a dilute (about 2 per cent) solution of sodium chloride (table salt). After washing, the print may be toned, or treated with a combined toning and fixing bath.

Stain (due to general excessive exposure of the paper to light or to the temperature of the bath being too high) may be avoided, and at the same time the contrast of the image may be increased by adding to the developer a few drops of a dilute solution of potassium dichromate (G. Schweitzer, 1905); up to 5 drops of a 1 per cent solution may thus be added to 4 oz. of diluted developer.

in the cold, may be used for gelatine P.O.P. (Lumière and Seyewetz, 1906)—

Sodium hyposulphite, cryst.	5 oz. (250 grm.)
Sodium bisulphite, coml. solution	1½ dr. (10 c.c.)
Alum	350 gr. (40 grm.)
Lead acetate . . .	18 gr. (2·0 grm.
Water, to make . .	20 oz. (1,000 c.c.)

Gold is added to this as required, in the manner described above, according to need.

(*d*) Self-toning Papers

545. Types of Self-toning Papers. The addition to the emulsion of the gold salts necessary for toning prints on print-out paper was suggested before 1860, but it was not until 1896 that P. E. Schoenfelder and E. Kehle worked out a commercial process. For some years past a certain number of *self-toning* or *auto-toning* papers have been prepared which, instead of gold, have salts of selenium or tellurium in the emulsion.

Emulsions for self-toning papers are made with gelatine or collodion, and correspond to gelatine and collodion print-out papers respectively. Gelatine papers are generally preferred for glossy prints and collodion papers for matt prints.

The extreme simplicity in the handling of these papers and the permanence of the prints when the treatment has been correct have made these papers very popular with amateurs who do their own printing. So simple, indeed, is the manipulation that there is a tendency to take liberties, and so to depreciate the quality and permanence of the prints.

546. Working Methods. Self-toning papers should be used only with vigorous[1] negatives. The final tone of the image largely depends on the qualities of the negative; within certain limits, the more vigorous the negative, the richer the colour of the print.

Self-toning papers may be placed in the fixing bath without any washing or other preliminary treatment. Most of them can be treated with

[1] With the exception of the special self-toning papers made for obtaining contrasty prints from weak negatives.

a solution of sodium chloride (table salt) before fixing to give purplish tones. In both cases, the colour of the image depends essentially on the concentration of the bath, and on the volume of bath used for a given amount of paper. To ensure uniformity of colour when many prints of the same subject are being printed, they should not be treated one by one in the same solution; it is better to measure into a dish the amount of solution required for all the prints, and then to introduce them rapidly one by one into the bath for simultaneous treatment. The prints must be kept in movement, a good method of doing this consists in continually transferring the print at the bottom of the heap to the top.

The usual strengths of baths are 5 per cent of sodium chloride for the salt solution and from 10 to 20 per cent of sodium hyposulphite for the fixing bath. Acid or alum fixing solutions should on no account be used. The fixing bath should preferably be rendered alkaline by the addition of a pinch of bicarbonate of soda in accordance with the recommendation of most manufacturers.

Very cold baths should be avoided; the best temperature is in the neighbourhood of 65° F. If the toning is done in the fixing bath, and if the temperature is too high, the strength should be reduced by addition of water to avoid the toning being too rapid for easy control.

The volume of bath generally recommended is from 1 to $1\frac{3}{4}$ oz. for a print 7 × 5 in. (from 30 to 50 c.c. for a print 13 × 18 cm.) (4 to 7 oz. per sq. ft., or 12 to 20 c.c. per sq. dm.). Used baths, which have practically no value, should not be used many times in succession, nor should fixing baths which have been used for other sensitive material ever be used for self-toning paper.

Where the above instructions are found to differ in any respect from the makers' instructions, the latter should, as a rule, be followed.

Some self-toning papers become discoloured between the times of their manufacture and use more readily than do other print-out papers, but the colouration disappears during fixing; paper should not therefore be thrown away, owing to its appearance, until it has been tested.

After fixing, the prints should be washed under the conditions (§ 607) described for all other papers.

CHAPTER XXXVIII

PAPERS, PLATES, AND FILMS FOR POSITIVE PRINTS BY DEVELOPMENT

(*a*) General Considerations

547. Different Kinds of Emulsions and their Characteristic Qualities. The different emulsions to be considered are: Gelatino-bromide for black tones; gelatino-chloride for black tones—these sometimes contain a small proportion of silver bromide; and gelatino-chlorobromide of very fine grain for obtaining warm tones by simple development and fixing. It should, however, be recognized that this division is somewhat arbitrary. Warm tones can generally be obtained with the emulsions described as being for black tones, especially when it is intended that they should be viewed as transparencies. And the emulsions described as being intended for warm tones can always be made to produce black images. This division is, however, justified by the general character of each class.

In each class, emulsions coated on paper[1] are usually prepared in several varieties, each corresponding to a given range of extreme densities of the negative.[2] These different grades are not necessary in the case of emulsions coated on glass or other transparent supports for the production of images to be treated singly, since the contrasts of the image can be so easily modified by exposure and control of development. This method of modification cannot be exercised when the same emulsions are coated on an opaque support and the image is examined by reflected light.[1]

In an image examined by transmitted light, the contrast increases progressively in proportion to the progress of development, up to a certain maximum, which may be very high (§ 202, Fig. 140). But the contrast in an image seen by reflected light increases rapidly at first and then becomes stationary[2].

As a rough guide, an approximate idea may be given of the relative sensitiveness of the various types of emulsions—[3]

Ultra-rapid negative emulsions	75,000 to 100,000
Positive emulsions, black tones	1,000 ,, 3,000
Gelatino-bromide papers (bromide)	300 ,, 1,000
Gelatino-chlorobromide papers, warm tones	100 ,, 200
Transparency plates, warm tones, according to the tone desired and brand	1 ,, 25
Gelatino-chloride papers (gaslight)	1 ,, 5

Gelatino-chloride (gaslight) papers give, as a rule, much more intense blacks than bromide papers, and, consequently, a more extended scale of tones. Their sensitiveness is considerably less, and their development should be

[1] Positive emulsions for papers are generally coated after a very brief maturing and without washing. On such emulsions the latent image weakens very rapidly and can disappear completely in a few weeks, paper that has been exposed and not developed being then usable anew.

Papers intended for professionals and for developing and printing establishments for amateurs are usually coated with an emulsion sufficiently hardened to be insoluble in boiling water, so as to resist (not without injury, however, to the quality of the prints; § 611) the excessively high temperatures, sometimes exceeding 212° F., of the drums of the drying or glazing machines.

[2] In a range of seven papers (glossy surface) of the same series, the logarithms of the gradation (between the densities 0·02 and 1·7) and the gamma are spaced as follows (Wandell, 1934)—

	Log. of the Gradation	*Gamma*
Ultra contrasty	0·45	7·1
Extra contrasty	0·65	5·15
Contrasty	0·90	3·25
Normal	1·15	2·9
Special	1·4	2·7
Soft	1·7	1·75
Ultra soft	2·1	1·1

Papers of the same series with different degrees of contrast usually have the same degree of rapidity in practice, exposures that differ little giving the maximum black on all the papers of the series, whereas the speeds measured according to the threshold of density increase progressively when passing from the most contrasty variety to the softest one.

[1] It is easy to realize this difference by examining by transmitted light a print made on a paper which gives too great a contrast for the negative used. Although, by reflected light, all the dark tones are lost in the deepest blacks, full detail and modelling are apparent by transmitted light, provided that a sufficiently strong light is employed to compensate for the opacity of the paper.

[2] A very brief development being liable to yield a degree of contrast lower than its maximum, most frequently produces an image which is irregularly developed, and of very disagreeable colour. However, the use of a metol developer without bromide, or with very little bromide, permits development to be somewhat curtailed with certain papers and permits the use of a paper of given gradation for printing from negatives of which the range of extreme densities is somewhat greater (J. Southworth, 1936).

[3] Gelatino-bromide and gelatino-chloride papers for development contain, on an average, about 3 gr. of metallic silver per square foot (2 grm. per sq. metre).

extremely rapid. Its normal time is generally about 30 seconds.

548. Abrasion. All these papers, especially gelatino-chloride and those with a glossy surface, are very susceptible to friction. Stress marks, the result of friction or abrasion, show in the same manner as on negative emulsions (§ 199), as black lines on a light ground, or as light lines on a dark ground. For some years many glossy papers have been rendered immune from stress marks by a very thin overcoating of plain gelatine,[1] the thickness being about $\frac{1}{12500}$th to $\frac{1}{5000}$th of an inch (0·002 mm. to 0·005 mm.). These stress marks are principally confined to the outside surface of the film, particularly in the case of the black markings. The markings which result from abrasion or friction can be minimized by "neutralizing" the outside surface during development by adding a very small quantity of a soluble iodide to the developer, which superficially desensitizes the emulsion. Fixing is then very slow and necessitates the employment of a more concentrated bath. The effects of friction can also be lessened by the addition of small quantities of hypo to the developer; but this introduces the risk of yellow stains of the same nature as dichroic fog.

Although these remedies are suggested, it is very desirable to avoid all friction or rubbing of the surface of a paper, however slight. Special care should be taken to prevent the sheets of a packet from sliding over each other.

549. Manipulation of Printing Papers before Exposure to Light. There is no uniformity in the methods of packing adopted by different makers. In some cases the sheets are packed in pairs, the two sheets of each pair being face to face; in others, all the sheets of the packet are turned with their surfaces in the same direction, the last sheet of the packet being placed the opposite way so as to prevent the surface of the emulsion from coming in contact with the packing paper.

The emulsion surface is generally recognizable by its slight concavity. In case of any doubt arising with matt or rough papers, a corner may be taken between the teeth; the gelatine film will adhere to the teeth.[2]

The surface of the paper should never be touched by fingers which are either moist, greasy, or contaminated with chemicals, especially hypo. Whenever possible, the paper should be held by the edges. At the most, when a print is to be trimmed after development, it may be held by a corner.

The precautions to be adopted in keeping stocks of sensitive paper are the same as those

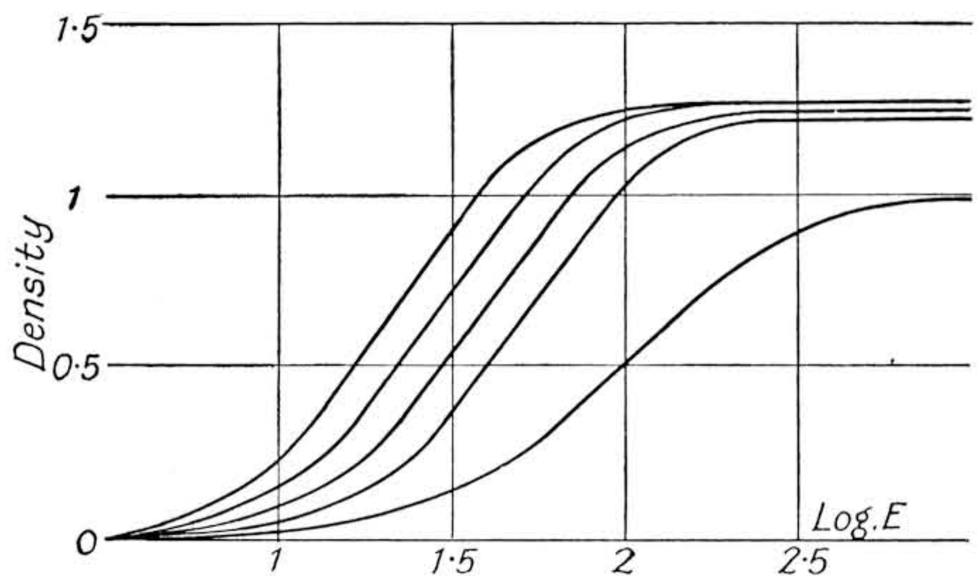

FIG. 183. CHARACTERISTIC CURVE OF A GASLIGHT PAPER
(Mees)

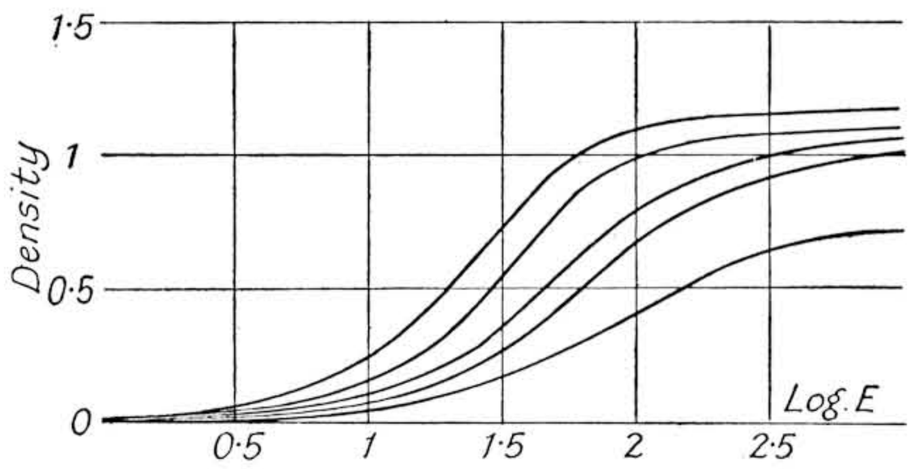

FIG. 184. CHARACTERISTIC CURVE OF A BROMIDE PAPER
(Mees)

already described for keeping sensitive plates and films (§§ 280 and 281).

550. Exposure. Excepting for compensating for any inequality in a negative (§ 515) the exposure should always be made to a uniform

[1] It has also been proposed to give an overcoating, insoluble but permeable—agar or collodion—so as to diminish the risk of adhesion to the fabric of the drying machine.

[2] A grey imprint on the back of the paper is a very great assistance in identifying the sensitive surface. Such imprints were employed extensively from 1915 to 1918 by the English Military Air Force, the imprint being an Army ownership mark. The makers of various papers used by the firms undertaking developing and printing for amateurs also print the name of the paper on the back. There is a risk of this imprint appearing on the picture in a grey darker than than image if the prints issuing from the printing machine are left for a long time face downwards in red light, the image being then weakened by the Herschel effect (§ 197) except where protected by the imprint. For metrophotography, papers are made with the back coated with plain gelatine—insensitive. These papers, after they have expanded in water, are squeegeed to a glass plate, the back of the paper in contact with the glass. They are never subject to any expansion or contraction by subsequent wetting or drying while they remain on the glass support (§ 613), and, consequently, measurements can be read off the prints so made.

light, obtained by a suitable spacing of several lamps in relation to the negative; or a very satisfactory approximation can be secured by the employment of a single lamp sufficiently far from the negative.

When, for example, four lamps are used placed at the four sides of a square, at a distance equal to half the diagonal of the square, the variations of the illumination of the square will not exceed 4 per cent of the maximum illumination—variations which may be regarded as negligible.

When a single lamp is placed opposite the centre of the surface to be illuminated, the lighting decreases progressively from the centre, on account of the increasing obliquity of the rays of light. A variation is generally disregarded when it is not more than 15 per cent between the illumination at the centre and that at the most distant points; this variation corresponds with an obliquity of 18° for the extreme rays in the case of a source consisting of a point of light. In practice, the lamp is placed at a distance of about twice the longer side of the negative, but this distance may be appreciably reduced if a diffused light is employed, e.g. an electric lamp with an opal bulb.

In order to secure even illumination of large surfaces with a battery of mercury-vapour lamps they should have a length equal to about one-and-a-half times the greatest length to be illuminated. The tubes should be arranged parallel to each other, and parallel to the direction of the negative. They should be separated from each other by a distance of one and three-quarter times their distance from the negative.

551. Bearing in mind that the illumination decreases very rapidly in strength as the distance from the lamp becomes greater (§ 13), uniform results cannot be expected unless the negative is kept at a fixed distance from the lamp. This applies equally whether systematic tests are made for obtaining the best time of exposure, or whether a series of prints is required from one plate. This condition is secured automatically when a printing machine is used. When printing in a frame the most simple method of obtaining these conditions consists in placing the lamp on a table in a marked position, and drawing lines on the table to indicate various positions for the frame. On each one of these lines make a note of the largest plate which can be illuminated sufficiently uniformly in that position, and also the relative values of equal times of exposure.[1]

[1] These lines can be drawn at distances from the lamp proportionate to the square roots of the numbers 1, 2, 4, 8, 16, 32, etc. These are, approximately, 1, 1·4, 2, 2·8, 4, 5·6, etc. Under these conditions, equivalent exposures are practically doubled when the frame is moved from any line to the next.

When giving exposure times inversely proportionate to the illumination, the effective exposure diminishes slightly in proportion as the illumination decreases; the photographic efficiency being, with almost all papers, less as the lighting becomes less intense. But this effect is, as a rule, of a practical significance only when the illumination is very considerably reduced.

With some printing machines for photography and cinematography, the lighting may be varied by means of a rheostat placed in the circuit of the lamps, or of each lamp. It is necessary to note that under these conditions the *quality* of the light will vary as well as the quantity, and in a manner very different from one lamp to another.

It has been clearly shown by various experimenters, and particularly in the laboratories of Ilford Limited (1925) in regard to the development papers of their own manufacture, that it does not necessarily follow that in printing by a feeble light the contrast in the prints is increased. On the contrary, the contrast is frequently reduced, as is also the maximum density of the blacks obtainable, whatever may be the time of exposure to the reduced light. This quality of regulating the contrast in prints by variation in the light, often regarded as a general rule, is, at the most, a special property of particular development papers.

552. Experimental Determination of the Exposure. The success of printing on development papers depends essentially on two factors. The first is the choice of an emulsion suited to the character of the negative, and the second is the adjustment of the exposure between certain limits determined by the sensitiveness of the emulsion, by the illumination of the negative, and by the opacity of the densest part of the negative under which it is desired to obtain a grey, differing (however slightly) from the tone of the paper or from the plain glass.[1]

The actual time of exposure ought not to be very short, unless some automatic exposing device can be adopted, as a slight error assumes

[1] It has been sometimes suggested that the best time of exposure should be determined from the mean value of the opacity of the negative. It is easy to show that such a proposition is radically unsound. The correct rendering of the details in the lightest tones is generally far more important than the correct rendering of the other tones. A satisfactory rendering of the shadows is, however, obtained by the same exposure if the contrast and gradation of the paper are suited to the contrast of the negative (§§ 502–503).

relatively a considerable importance. At the same time, it should not be so long as to restrict unduly the number of prints produced. When the exposure is made by hand, the intensity of the light,[1] and its distance from the negative, should be so arranged that the exposures should be, as far as possible, from 10 to 30 seconds.

The following working conditions may be adopted as a rough guide—

Bromide papers . . . Transparencies, black tone .	16 c.p. lamp at 4 ft.
Chloro-bromide papers .	32 c.p. lamp at 18 in.
Chloride or gaslight papers . Transparencies, warm tones .	100 c.p. lamp at 12 in.

Although with practice it is not difficult to learn to count seconds, it is always preferable to rely on some mechanical time indicator. It ensures uniformity in prints taken from the same negative. The most practical indicator for this purpose is the metronome, adjusted to mark seconds or half-seconds.

553. Even the most experienced professional printer cannot avoid making errors from time to time in estimating the exposure for taking a print from a particular negative on a certain paper. Those who print only occasionally are very much more liable to make such mistakes, especially if they are using a paper with which they are not familiar. Rather than run the risk of spoiling several sheets of paper in succession, or of obtaining only inferior prints, it is infinitely preferable to sacrifice a small piece of paper for making tests. A piece of the same paper which is to be used for printing is used for making a series of exposures in steps, suitably adjusted to the negative.

A series of exposures so arranged that each shall be twice the preceding—so forming a *geometrical progression* in the ratio of 2—will allow the best time of exposure to be determined within a very long range, and by the use of the minimum of time and paper. It is, in fact, a general law in photography that exposures in a constant ratio produce images in which the differences are practically equal. The number of test exposures to be made will obviously depend on the experience already acquired: the first estimate is much more likely to be correct if the photographer has already ascertained the most satisfactory exposures for negatives which differ only slightly in character and if prints have been taken on the same paper under identical conditions of lighting.

The beginner should try, for example, exposures of 4, 8, 16, 32, and 64 seconds. Within this range it is practically certain that the correct exposure will be found. A more experienced worker can limit his tests to two exposures, 12 and 24 seconds, for example. It is not desirable, particularly at the start, to endeavour to economize paper in these tests. It is essential that in each of the test exposures it should be possible to examine satisfactorily the rendering of the lights and shadows, especially in the chief points of interest.

The printing frame, containing the negative and the piece of paper for the test, is covered with an opaque shield—a piece of card, thin sheet iron, etc.—and placed at the correct distance from the lamp, accurately adjusted.[1] If, for example, it is desired to test the five times of exposure previously suggested, the shield, completely withdrawn for four seconds, will be placed so as to cover about one-fifth of the test-piece at the expiration of that time. Then the shield will be moved forward so as to cover an additional portion of the paper at successive intervals of 4, 8, 16, and 32 seconds.

The different portions of the paper will then have been exposed respectively for—

4	= 4 sec.
4 + 4	= 8 ,,
4 + 4 + 8	= 16 ,,
4 + 4 + 8 + 16	= 32 ,,
4 + 4 + 8 + 16 + 32	= 64 ,,

The test piece thus exposed should be developed at once under the conditions which will be described later for each variety of paper, the time of development and the temperature of the solution being very carefully noted.

The different parts of the test piece will show

[1] In automatic machines and in some models of printing box, the illumination can be varied, not by altering the distance between the plate and the lamp or lamps, but by regulating the intensity of the electric lamp by reducing the voltage more or less by means of a rheostat.

[1] For making a test exposure in a printing box, the opaque shield should be placed on one of the diffusers or on the glass plate which holds the vignetting and cut-out masks. It has also been proposed that neutral grey screens should be employed, these screens being formed of a series of flat tints of which the opacities increase in geometrical progression with a ratio of 2. The negative to be tested is placed in contact with the sensitive paper in the usual manner and the screen in contact with the glass side of the negative. By means of one exposure a series of results is obtained, and as soon as the best of these partial images is recognized, the correct time of exposure is obtained by dividing the actual time of the test exposure by the known opacity of the corresponding part of the screen.

images increasing in depth; that which best represents the tone values of the subject will be selected. Assuming that the development has been correctly carried out, if all the images are too light, all the exposures have been too short; if, on the contrary, all are too dark,[1] all the test exposures have been too long. In either case the test ought to be repeated either by using a lamp of greater or lesser intensity, or by modifying the distance between the printing frame and the light, or by adopting a new series of test exposures. Should one of the partial images be a little too dark and another slightly too light, a fresh test is unnecessary; an exposure intermediate between those corresponding with the two images respectively may be adopted.

If the light tones are correctly represented on one of the partial images, and the shadows on another, it is a sign that the paper selected is not suitable for printing from that particular negative. The test should be repeated on a paper exactly suited to the negative.[2] If the shadows are correctly reproduced with an exposure shorter than that which gives the best rendering of the light tones, a paper which gives softer contrasts should be used. On the contrary, a paper giving greater contrast should be selected if the shadows are correctly rendered with a longer exposure than that required for the light tones. In either case, a test for the correct exposure should be made on the new paper.

The best exposure being known, any desired number of prints may be taken consecutively, and the development deferred to allow of the simultaneous treatment of all the prints from the same negative. An essential condition is that they should be developed in exactly the same manner as the test piece, the developer being identical in composition and temperature.

554. Urgent Prints. In certain cases, as, for example, current events for the daily Press, topical cinematography, military operations, etc., one or more prints may be required in the shortest possible time after exposing the negative. The print is then taken from the wet negative, either before or after fixing. It must be remembered, however, that the bromide of silver in the unfixed film forms an image complementary to the negative, the contrast of the negative image being thereby considerably reduced. Also, a temporary fixing in an acid solution with a brief rinsing will require as much time as a thorough fixing in a fresh hypo bath of suitable strength.

Printing from a negative which has been fixed, very rapidly rinsed and surface-dried, is best carried out by means of the enlarging apparatus. If absolute sharpness is not essential, a print may be made by contact. The sensitive paper should be protected against actual contact with the negative impregnated with hyposulphite by the interposition of a very thin sheet of celluloid of ample size, applied to the negative with a squeegee. On account of possible want of contact, diffused light should be avoided as far as possible. The image will be slightly sharper if the print is made at a long distance from a light as small as practicable, the frame and the lamp being kept perfectly still during the exposure.

In the case of a negative which has not been fixed but development stopped by means of an acid bath,[1] the sensitive paper may be applied directly to the negative by means of the squeegee (gelatine in contact with gelatine). The paper should be previously moistened with water and the exposure made in the usual manner after wiping the glass side of the negative, or after placing on a sheet of glass in the case of a film negative. It should be remembered that the sensitiveness of the paper is somewhat less when wet.

555. Soaking before Development. The development of prints on paper is considerably facilitated if they are wetted before development. This prevents the paper from curling in the developing solution, and also lessens the risk of air-bells forming on the surface, a risk to which rough papers are specially liable. It is very easy to ascertain if air-bells have formed by examining the print close to the light, and, if any are seen, to ensure the uniform wetting of the surface by passing a brush or a tuft of

[1] It is obvious that the development of the test piece might be shortened, thereby preventing the image from attaining excessive density. But in that case the blacks would not possess that rich quality which characterizes a normally developed print.

[2] It must be borne in mind that though two papers may have their full gradation within the same limits, they may render the intermediate tones very differently. The transition may be practically uniform in one, and very abrupt in the other. Two papers possessing the same extreme contrast may thus be very different in their general character.

[1] In this case it is necessary to use an acid bath which will not liberate carbon dioxide from the carbonate, otherwise there is a risk of want of contact from the air-bells formed by the liberation of the gas. A saturated solution of boric acid may be used (R. Namias, 1908).

cotton wool (thoroughly wetted) over the whole surface of the gelatine.[1]

The same precaution is generally adopted with positive cinematograph films before development (§ 369).

556. Development. A print on paper can be considered perfect only if development has been sufficiently prolonged to produce the strongest black[2] which the paper in use can give, without, however, being carried to such a stage that the whites are degraded. When it is desired to utilize only a part of the scale of tones, e.g. from white to a medium grey, as in portraits of children, mist effects, etc., the paper should be selected and the exposure regulated so as to produce only a grey under the thinnest part of the negative. But development should be carried as far as in the case of a print having full blacks. It is only on this condition that the intermediate tones can be correctly rendered. A curtailed development produces, as a rule, only greenish or yellowish images[3]—very unsuitable for after-treatment—sulphide toning, Bromoil, etc. A very short development will even produce an irregular image, certain parts being more fully developed than others.

In order to ascertain the normal limits of the time of development[4] of a certain sensitive paper in a given developer, used at a definite temperature, it is necessary to find out what minimum time of development will produce the maximum black and at what stage of development the whites begin to veil or stain. These minimum and maximum times of development respectively are ascertained as follows (Dr. B. T. J. Glover, 1922)—

A strip of the paper to be tested is exposed uncovered in a printing frame, at a suitable distance from a source of light, e.g. for 2, 4, 8, 16, and 32 seconds respectively (§§ 552 and 553), adjusting the exposure so as to produce the densest black possible. This strip should be developed for 2 minutes if it is a bromide paper, or 30 seconds if gaslight, in each case using the developer best suited to the paper. It should then be ascertained which of the exposures has produced the most intense black. If this exposure should be either the longest or the shortest of the times given it will be necessary to repeat the test after bringing the frame nearer to or moving it farther away from the source of light. Assume, for example, that 8 seconds is the exposure which gives the densest black. A strip of paper about an inch or rather more in width should be exposed in a printing frame for the time determined, namely, 8 seconds, half of its width being covered with a length of black paper. This strip is then developed in a bath whose temperature has been noted, and pieces about an inch long are cut or torn off at intervals, care being taken to mark on the back of each the time during which it will be developed. These development times should form, preferably, a geometrical progression in a lesser ratio than that used for ascertaining the time of exposure. The following series of numbers may be taken as an example of suitable times of development in seconds—[1]

18 25 35 50 70 100 140 200 280

the first six being appropriate for gaslight papers and the last six for bromide paper, for the purpose of this experiment.

After each piece has been developed for the given time, it is placed directly in a fixing bath, so as to allow the various pieces to be compared in a bright light. It will be found, in the case of bromide paper, that the black developed for say 100 seconds has less density than that developed for 140 seconds, but that there is no appreciable difference between the blacks developed for 140 and 200 seconds. From this it follows that a

[1] When a print is required from a vigorous negative on a bromide paper which tends to give strong contrasts, the print, after being exposed and wetted, may be immersed for about two minutes in a 0·1 per cent solution of potassium bichromate. It should then be rinsed rapidly and developed. The contrasts in the image will be very appreciably softened (J. Sterry, 1907). This effect is considerably influenced by the concentration of the soluble bromide in the emulsion used (Lüppo-Cramer, 1929). It has been found (F. Formstecher, 1933) that treatment with any oxidizers between exposure and development permits the density curve to be distorted by extending the gradation and lengthening the lower curved portion. Among other substances, cupric chloride or potassium ferricyanide may be used.

[2] The following considerations do not apply to warm tone prints by direct development.

[3] The image in reduced silver is black only when the size of the grains of silver is within certain limits. Very fine grains, corresponding with the incomplete development of the grains of the silver halide, are yellowish and remain yellowish after sulphiding. Their colour can be improved only by intensification, producing an appreciable increase in their size.

[4] The speed of development of images on paper has often been attributed to the penetration of the developer through the paper base, but the permeability of the support plays no part. A paper of which the emulsion surface has been covered with a waterproof varnish shows no trace of the image after a time of immersion equal to the time of normal development (C. Emmermann, 1936).

[1] The ratio of this progression is equal to 1·4, that is, equal to the square root of 2.

time of development less than 140 seconds leads to an impairment of the black. Further, the half of each piece which has been protected from the action of the light should be perfectly pure on those pieces of which the time of development has not exceeded 200 seconds, though it may be grey and even stained yellow on the piece developed for 280 seconds.[1] From this it follows that the time of development necessary to produce the best black can be exceeded considerably before fog or stain make their appearance.

In order to determine that there is a minimum time of development independent of the exposure given, the experiment should be repeated under identical conditions, excepting that the strip of paper should be exposed for a considerably longer time than in the preceding test, e.g. five times longer. It will then be found that although the over-exposure has been considerable, a perfect black is obtained only after development for a similar time to that determined in the previous experiment. From this it is concluded that insufficient development cannot be compensated by an increase in exposure.[2]

As a general rule, a photographic paper of good quality and easy to manipulate may be developed in a suitable solution for twice the minimum time necessary for obtaining the maximum black without any staining or veiling.

557. Experiment also shows that all times of development comprised between the maximum and the minimum, determined as described in the preceding paragraphs, will yield perfect prints, provided that the exposure is adjusted to suit the time of development adopted.[3] The corresponding exposures are equally comprised between two limits, and, as a general rule, identical prints are obtained, provided that, within the limits specified, the time of exposure multiplied by the time of development is a constant number (B. T. J. Glover, 1922). For example, if the two extremes of the time of development are 2 and 4 minutes, and development for 4 minutes corresponds with an exposure of 15 seconds, under certain conditions, a print exposed for 20 seconds and developed for 3 minutes, or a print exposed for 30 seconds and developed for 2 minutes should be indistinguishable from each other. But it would not be possible to compensate by development for a shorter exposure than 15 seconds nor for a longer exposure than 30 seconds, as development could not be longer than 4 minutes nor less than 2 minutes in the example quoted, without the onset of fog or stain in the former case, and failure to produce a good black in the latter case.

558. As already shown in regard to the development of negatives (§ 342), the speed of development is greater in proportion as the temperature is raised. The proportionate times of development for different temperatures are not the same when one developer is substituted for another. The variation may be twice as much with one developer as with another for a difference in temperature of 18° F.

The time of development determined by the tests just described would therefore be quite valueless if development were carried out on another occasion at a different temperature. We shall see, however, that for certain types of paper, at any rate, development can be regulated by other means than by a constant time.

559. **Developers for Positives.** While the differences in colour of the silver reduced by various developers is of very limited importance in negatives, they assume considerable importance in the case of positive prints. A developer consisting of metol and hydroquinone yields principally warm black tones; metol without hydroquinone, a more neutral black; while diamidophenol or amidol tends to produce bluish-blacks which are unsuited for cream-tinted or chamois paper.

The formulæ recommended by the different manufacturers vary considerably, even when intended for use with emulsions of the same type. Beginners will do well to follow the makers' instructions, but it may be stated that any developer suitable for one type of emulsion will develop quite satisfactorily all other emulsions of the same type. There is only one exception

[1] The times of development given as an example are, obviously, not those which would produce on all papers and at all temperatures the results expected. It may be necessary to repeat the test with smaller or higher numbers, but preferably following the same ratio of progression.

[2] It is frequently recommended that prints on development papers should be developed to "finality." This implies that, after a certain time of development, the image will undergo no further change. Although the speed of development becomes slower and slower, it never actually stops. This advice ought to be understood as applicable only to the blacks of the image, which, once they have reached a certain depth, do not increase, however the development may be prolonged.

[3] This very appreciable latitude in the exposure of development papers for black tones is due to the considerable increase in the *regression of the inertia* in proportion as development is prolonged. (See Figs. 183 and 184, § 547.)

to this; plates or papers intended for yielding warm tones will often work more satisfactorily with one formula than with another.

Potassium bromide, the use of which is optional in developers for negatives, is a necessary constituent of developers for positive images on plates, films, or papers. The proportion of bromide which is most suited to one emulsion is not always the best for another. It is, therefore, best to make a few systematic trials to determine the most desirable proportion of bromide for a given paper.

According to the paper, and also according to the developer employed, the quantity of bromide recommended by the different makers ranges from slightly less than 2 gr. to 25 gr. per 20 oz. of working developer (0·2 grm. to 3 grm. per litre). A series of solutions may be prepared, containing in 20 oz.—

1½ gr.—3½ gr.—7 gr.—13 gr. and 25 gr.

of potassium bromide.

A small quantity of solution of each strength only need be prepared, and for facilitating the correct measuring of these small quantities of bromide, it may be used in the form of a 1 per cent solution. This may be measured from a dropping tube, after having ascertained how many drops represent, say, one dram.

A strip of the paper to be tested should be exposed to light with black paper covering half its width, the other half being uncovered. The exposure should be sufficient for the most intense black that the paper will give on development. The strip should then be cut into five pieces, which should be marked on the back and developed, each in a solution with a different proportion of bromide. The time necessary for obtaining a dense black should be noted and the action of the developer allowed to continue until either staining or veiling appears. The smallest proportion of bromide which will allow a reasonable time to elapse between full development of the black and degradation of the whites may be regarded as the correct quantity for that paper. It will be necessary to fix the test-pieces, so that they may be examined in a good light and the quality of the black correctly judged. A greenish black indicates that the proportion of bromide has probably been too great.

560. Stopping Development with an Acid Bath. On account of the great speed of development of positive papers, there is a risk of development continuing beyond the desired point, and even continuing irregularly, if the print be merely rinsed in plain water between development and fixing. Omission of rinsing, i.e. the transfer of the print direct from the developer to an acid fixing bath, is not to be recommended; the accumulation of developer in the fixing bath would soon discolour it to such a degree that the prints would lose their purity.

Most frequently the action of the developer is stopped by immersing the prints in an acid bath, where they can remain without detriment for a long time. This avoids the necessity of having to handle the developer and the fixing bath alternately; in this case, omission to rinse the hands would involve a risk of staining the prints.

This *stop bath* may be simply a weak solution of sodium bisulphite, or of any acid, or an acidified solution of alum. This latter possesses the advantage of becoming turbid as soon as the acid is saturated by the successive quantities of developer carried into it by the prints, and thus affords an automatic indication that the bath must be either re-acidified or renewed.

This acid bath may be—

Chrome alum . . .	180 gr.	(20 grm.)
Acetic acid, glacial . .	180 min.	(20 c.c.)
Water, to make . .	20 oz.	(1,000 c.c.)

Some papers have a tendency to acquire a very slight greenish tint after treatment with chrome alum; in that case, chrome alum may be replaced by ordinary alum. The acetic acid may also be replaced by any other acid which is less costly, and, particularly, by a smaller quantity of hydrochloric acid.

561. Handling of Positive Sensitive Papers in the Tropics. The precautions previously suggested for negative films and plates (§ 391) apply equally to papers. The preliminary soaking should be in a solution of sodium sulphate, or, if spirit is not costly, in water to which about 20 per cent of its volume of methylated spirit has been added; and sodium sulphate should be added to the developer. In order to avoid the use of liquid acids which involve difficulty in transport, or costly solid acids such as tartaric or citric, the stop bath may be acidified with either boric acid or sodium bisulphate.

(*b*) Bromide Papers[1]

562. Non-actinic Light. Bromide papers are of sufficiently low sensitiveness to allow of their

[1] With bromide papers there is often noticed a decrease of the maximum density and contrast as they become older; this phenomenon does not occur with chloride and chlorobromide papers (Ahriman, 1933).

manipulation in yellow, greenish-yellow, or orange light. The use of red light is not only useless but distinctly undesirable, as it renders it very difficult to judge the contrast and quality of the image correctly during development. With regard to the choice of the methods of lighting, the testing of non-actinic screens, and their preparation, reference should be made to §§ 248 to 251, where these matters have already been dealt with.

The methods of working described for papers apply equally to the same emulsions coated on opal glass.

563. Developers for Bromide Papers. Either of the following developers may be used with advantage.[1]

Metol-hydroquinone Developer—

Metol	9 gr. (1 grm.)
Soda sulphite, anhydrous .	½ oz. (25 grm.)
Hydroquinone . . .	35 gr. (4 grm.)
Soda carbonate, anhydrous	130 gr. (15 grm.)
Potassium bromide, 10% solution . . .	45 min. (5 c.c.)
Water, to make . . .	20 oz. (1,000 c.c.)

This developer, which keeps well, can be prepared in the form of a stock solution of double strength. This is diluted at the time of using by taking a given quantity of the solution and adding an equal volume of water.[2]

When this developer is used at a temperature of about 65° F., the image appears, as a rule, in about 30 seconds, and development is complete in from 2 to 3 minutes.

Amidol Developer—

Soda sulphite, anhydrous	½ oz. (25 grm.)
Amidol (hydrochloride)	55 gr. (6 grm.)
Potassium bromide, 10% solution . . .	45 min. (5 c.c.)
Water, to make . .	20 oz. (1,000 c.c.)

This developer should be prepared at the time of using. At a temperature of 65° F., the image appears in about 15 seconds, and development is complete in from 2 to 3 minutes.

All the quick-acting developers previously given for the development of negatives, can be used for bromide papers, provided that the proportion of bromide is suitably adjusted.

564. Development. Development is usually controlled by inspection. A number of prints are immersed successively in a dish sufficiently large and with a quantity of developer which will allow of ready handling of the prints. As soon as several prints have been immersed, they should be kept in constant motion. The lowest should be brought to the top, each print in succession, until, the image being correctly developed, the print is transferred to the acid stop bath.

In proportion as fresh prints are developed, the developer becomes charged with increasing quantities of soluble bromide, and especially so as positive emulsions usually contain an excess of potassium bromide. Even if the temperature of the solution is constant, the speed of development falls off, and the colour of the prints tends to change progressively.

In order to ensure that prints from the same negative are as similar as possible, they should be developed together and for the same time.

The beginner, and also the amateur who only prints occasionally, will avoid all uncertainty by exposing and developing a test piece whenever using a new brand of paper or a different type of the make usually employed. This will enable them to ensure correct exposure (§ 553). In order to derive full advantage from this test, it is necessary to ensure that the temperature of the solution is constant, not only as between the test and the development of the print, but equally during the development. This requires that the temperature of the solution should be the same as that of the work-room. Further, the composition of the solution should not be modified progressively, that is to say, fresh developer should be used for each print developed separately, or for each batch developed together. Solutions used for developing cost so little that no one should ever hesitate to use a fresh quantity if the finest results are desired.

565. For developing the test piece, the Watkins *arithmetical coefficient* or "factorial" method may be used with advantage (§ 344), but the "factors" would have to be determined

---

[1] The risk of air-bells adhering to the surface is lessened, when the paper is not soaked before development, by replacing from 1 to 2 oz. of water in these formulae by an equal quantity of methylated spirit. To reduce the risk of stress marks (§ 548) and dichroic fog when developing in hot weather, a small portion of iodide is sometimes added to the developer—from 5 to 13 gr. per 20 oz. (·5 to 1·5 grm. per 1,000 c.c.). Hypo. and sodium cyanide in very small quantities, about 9 gr. in 20 oz. (1 grm. per 1,000 c.c.) are very effective in preventing stress marks, but they increase the risk of dichroic fog.

[2] The addition to the developer of a proportion of desensitizer, so small that there is no risk of staining the paper, will avoid all risk of veiling through oxidation, and ensures generally obtaining purer prints. Forty-five minims of a 1 : 1,000 solution of basic scarlet N should be added to 20 oz. of working developer (R. Mauge, 1925). It also lessens the risk of staining the whites in the event of subsequent toning.

experimentally for this special use. The " factors " to be used may be taken as roughly about half those used for negatives with the same developer.

For the two developers given in § 563 the value of the Watkins " factors " for prints on bromide paper are respectively—

Metol-hydroquinone developer . . × 5
Amidol developer . . . . × 10

(B. T. J. Glover, 1921.)

The total time of the development of the test piece will be, under these conditions, 5 or 10 times the interval between pouring on the developer and the appearance of the first details; and the time of development thus determined should be the same in all cases for the development of prints in the same developer.[1]

566. Local Control of Development: Brush Development. A worker who combines the qualities of a skilful technician and capable artist can produce excellent results by local development of bromide papers by means of a brush. But such methods are not in any way advisable for beginners.

Two dishes should be provided, one containing diluted developer and the other plain water.[2] There should also be a sheet of glass larger than the print, placed level on the table; a measure containing developer somewhat less diluted and thickened by the addition of glycerine, sugar or gum arabic; and several brushes of suitable sizes, according to the work in hand.

The print should be immersed in the dilute developer and transferred to plain water as soon as the image is completely visible. After rinsing, it should be placed on the sheet of glass, face upwards. The parts of the image which it is desired to increase in density are painted over with the less dilute developer by means of a brush. The print should be frequently immersed in water to avoid the edges of this local development showing too evidently. From time to time the print is again immersed in the dilute developer, and possibly, development may be completed with the print on the glass plate; any parts which are required to remain light are painted over with a weak solution of bisulphite which prevents their further development.

This method is only possible if the solution contains no developer liable to produce veiling from aerial oxidation (§ 339). Consequently, all developers containing hydroquinone are inadmissible.

The development of very large prints can be carried out, in the absence of very large dishes, in the following manner: The print should be thoroughly wetted and laid on a flat support of suitable size, e.g. a bench covered with rubber sheeting. Developer, diluted with an equal volume of water, to render its action slower, should be quickly spread over its surface by means of a sponge or a large brush.

(*c*) Positive Transparencies (Black Tone) on Plates and Films

567. General Considerations. Transparency emulsions being distinctly more rapid than those for bromide papers, all manipulations should be carried out in either orange-red or green light.

In addition to special transparency (lantern) plates, ordinary negative films or plates may be used for transparencies occasionally. Old plates of doubtful quality may be utilized in this manner, but it is generally impossible to obtain on these plates images as vigorous or possessing such good quality as those given by plates specially prepared for transparencies.[1]

Printing by contact on plates should be done in a printing-frame, and at a sufficient distance from a small source of light to avoid blurring through local want of contact.[2] If the edges of the sensitive plate are not protected by the rebate of the frame from the access of light, a mask should be used (§ 512). The mask itself should be attached to the glass side of the negative. Printing can also be done either by enlargement or reduction.

When the negative possesses strong contrasts,

[1] It may appear unsound, in principle, to use (for a print, to which a certain exposure has been given), a time of development based on the time of the appearance of the most fully exposed part of the test-piece or, most frequently, of a print exposed for a different time. Experience shows, however, that the differences in the best times of development for the different parts of the test piece are altogether negligible.

[2] The method of development consisting in starting development in a strong bath, and then allowing it to continue in plain water in order to decrease exaggerated contrasts (§ 389), is applicable to most bromide papers.

[1] There is also the method of obtaining transparencies by transferring to glass an image produced on a paper with a transferable film. Printing and development must be so arranged as to obtain the density and contrast necessary for examination by transmitted light.

[2] In special cases, where it may be necessary to print a transparency from a turned up negative, the sensitive plate being in contact with the glass side of the negative, perfect sharpness can be obtained by using, as the source of illumination, an arc between iron rods, at a distance of 6 ft., at least, from the printing frame. It is necessary to protect the eyes against the dangerous rays of this arc.

or when development of the transparency is prolonged in order to obtain great contrast, it is best to guard against halation (§ 231) by applying to the back of the plate an anti-halo paste or adhesive (§§ 236 and 238). There is no need for this precaution, as a rule, when printing on films.[1]

568. There are two points to consider in making black-tone transparencies: the average density and the contrast desired.

The average density depends entirely on the exposure; it should be greater or less, according to the method of examining the transparency and the strength of the illumination. For example, transparencies intended for projection in the home, by means of a comparatively weak light, must be of less density than those for projection before a large audience by means of a lantern fitted with an electric arc or other high-power light.[2]

The contrast of the image depends entirely on development, the image possessing greater contrast in proportion to the duration of development. Too long development, however, produces too dense an image unless the exposure be somewhat under-timed. The contrast should be greater or less, according to the nature of the subject. It ought to be much greater for an interior subject than for a landscape, and greater for a landscape than for a portrait.

Excepting for the reproduction of diagrams or drawings in black-and-white, the whites of a subject should never be represented by bare glass, unless they represent a direct source of light or its reflection.

The beginner will avoid spoiling a number of plates if he makes systematic tests to ascertain the correct exposure in the manner already described for prints on paper. These tests should be made on strips cut from a plate, or, in the absence of a diamond or other glass-cutter, on the smallest size of plate which can be obtained. These should have the same emulsion number, if possible. This testing of the time of exposure is specially necessary when printing either from very thin or very vigorous negatives. It is an absolute rule in the cinematograph industry.

The examination of the finished transparency should always be made under the normal conditions of its ultimate presentation. Only by very long experience is it possible to judge, from the transparency held in the hand before a well-lighted white diffuser, the effect which it will produce when projected on the screen.

569. **Development of Transparencies.** The determination of the duration of development by the Watkins method (§ 144) is not applicable to transparencies for lantern projection. It is, in fact, the light tones of the image which are the most important; the time of the appearance of the shadows cannot be relied upon exclusively as a guide. The use of this method for the development of prints on bromide paper (§ 565) is admissible only because the image of the light tones possesses the strength desired at the same time as the shadows attain their maximum density, provided that a paper is used of which the gradation is suited to the contrast of the negative. This does not apply in the case of lantern transparencies when the same emulsion is used with negatives of very different character.

Development must be judged by inspection;[1] it is not necessary to examine the plate by transmitted light until the light details are visible by reflection.

Most methods of obtaining coloured images by toning also act as intensifiers. It is therefore necessary to curtail the development of transparencies which are to be toned; in order to obtain full details in the light tones under these conditions, a somewhat greater degree of exposure should be given.

All developers suitable for negatives or bromide papers can be used for lantern transparencies after adjusting the proportion of bromide. This proportion varies, however, and in certain cases can be utilized as an aid in securing the contrast desired.

The equipment and methods of working are the same as those already described for negatives on plates or films.[2]

[1] In the chapters on projection (§ 779) and stereoscopic work (§ 837) will be found the particulars which apply specially to these transparencies; the sizes of the special plates, dimensions of the images, their position on the plates, etc.

[2] Very attractive effects may be obtained by attaching a transparency, either black or brown in tone, to an opaque support such as a paper with a metallic surface, silk stretched on card, etc., or by coating the emulsion surface of the transparency with a gold, bronze, or aluminium paint. In such cases the transparency must be kept very thin and of very slight contrast; the image is no longer seen as a transparency but by reflected light.

[1] The quality of a lantern slide is best judged by projection. For a provisional examination it may be held at about 4 in. from an opal flashed glass uniformly lit by a lamp of about 60 watts.

[2] For the development of cinematograph films, especially when the operation is carried out on a drum

570. Making of Duplicates. In making a positive transparency for obtaining a duplicate negative, by printing from the positive (§ 444), all the operations in making the transparency and the second negative must be regulated according to the result desired. The new negative may be required to be as true a reproduction of the original as possible, or a reproduction possessing greater or less contrast. As a general rule, only an inferior result can be obtained from a positive which is of clear and bright appearance. It is necessary to realize that the extreme parts of a scale of tones are invariably more or less sacrificed. Consequently, it is desirable to avoid, as far as possible, utilizing the tones corresponding with the regions of under-exposure and over-exposure in the characteristic curve (§ 202). Thus, the intermediate transparency and the final negative should be so fully exposed that the most transparent parts of the image are represented by a distinct grey tone of a density about 0·5.

In order to avoid local irregularities consequent on stopping development before the gamma is near its maximum, it is desirable to select emulsions of which the maximum gamma is comparatively low. Emulsions of low gamma are generally appreciably granular. For cinematograph transparencies, films are used of which the emulsion of the transparency type is stained with a yellow dye which limits the penetration of the light into the emulsion, and, consequently, the maximum contrast (J. G. Capstaff, 1927). With such films the contrast may be still more reduced when printing the intermediate positive or the new negative by using a light filter by a more or less intense violet filter.

For obtaining a transparency with reduced contrast, development should be carried out in a diluted solution with a small proportion of bromide. Development can then be stopped as soon as the details in the lights are sufficiently marked on the grey tone which represents pure white. To secure a transparency with increased contrast, development may, on the contrary, be prolonged until it is no longer possible to see the image by transmitted light in the dark-room, even in those parts representing the high-lights. It is, however, very seldom that the maximum contrast possible with a transparency plate needs to be utilized. In such a case, the transparency can still be intensified, after having taken a trial print—negative—on a rapid bromide paper.

From the intermediate positive, the final negative can be obtained in a similar manner and by taking the same precautions.

Experience has demonstrated that by making systematic preliminary trials, or automatically by previous sensitometric tests (H. Schneeberger and L. Lobel, 1925), duplicate negatives can be obtained which conform to all required conditions, and especially in giving copies which are identical in every respect with those printed from the original negative.

By superimposing the intermediate transparency on the original negative, each tone will be complementary, and if the true contrast has been secured, the combination will show an almost even density. If the negative predominates, the gamma of the positive is less than unity, and, in order to obtain a new negative exactly corresponding with the original, development must be taken further than the development of the transparency. The inverse procedure should be adopted if, in superimposing the positive and the original negative, the positive predominates.

(*d*) Gaslight Papers for Black Tones

571. Suitable Light for Working. One of the factors which have tended most to popularize the use of these papers among amateur photographers is the fact that they may be worked in safety without a dark-room.[1] Any domestic room may be used simply by waiting until the evening and not working too near a light. An amateur can, therefore, make his photographic prints during the evening, in a sitting-room, in comfortable warmth, very different from the conditions in an improvised dark-room. For example, a screen may be placed near the table on which the printing frames are loaded and the exposed prints are developed, in such a manner as to shield the table from the direct light from the lamp, all the manipulations being carried out by the light diffused from the ceiling

or a continuous machine, it is usual to add a desensitizer to the developer (§ 333) in order to avoid oxidation fog. This precaution is not necessary with transparency plates or films when developed in a dish or a tank. If, however, it is used, a desensitizer must be chosen which will not stain permanently either the gelatine or the supporting film.

[1] There have been placed on the market rapid silver chloride papers the emulsion of which contains colour sensitizers that increase their speed about tenfold towards the light of an incandescent lamp (O. Bloch, 1931). Such papers can be handled only in orange light.

and walls. It is, however, far preferable to use yellow light, which allows a much stronger illumination without any risk of fogging. For this, a light wooden frame may be used, covered with a translucent yellow paper, and made in such a form that it will stand upright on the table. Half the table can then be used for exposing the prints, preferably by means of a portable lamp, the other part being devoted to the working. The sensitive paper should be kept in a drawer in the table until required, so as to be protected from the general diffused light.

In a well-arranged workroom, and especially in professional and commercial establishments, gaslight papers are manipulated in ample bright yellow light.[1]

572. Developers for Gaslight Papers. In consequence of the relatively high degree of solubility of silver chloride in solutions of sodium sulphite, and also the rapidity with which silver chloride dissolves when in a state of division as great as that in emulsions of the "gaslight" type, the use of a developer rich in sulphite leads inevitably to yellow staining or veiling, of the same nature as dichroic fog (§ 433). It follows that though a developer specially prepared for chloride papers may be used without any loss of quality for the development of bromide papers, the various developers for negative work can only be used for these papers by considerably reducing the proportion of sulphite. This does not apply to amidol developers, in which the quantity of sulphite is generally sufficiently reduced. As a consequence developers specially prepared for gaslight papers are inferior in keeping qualities to those with a normal proportion of sulphite. On the other hand, the concentration of the solution should be so regulated that development is very rapid. Even in a developer containing a small proportion of sulphite, sufficient silver chloride would be dissolved in time to give rise to a yellow stain.

[1] Silver chloride papers are usually very susceptible to the Herschel effect (§ 197), and it may be utilized when printing on one of these papers negatives which have a range of densities greater than the gradation of the paper. After an exposure amply sufficient to print the paper under the densest areas of the negative, the printing frame, in which the paper is still in contact with the negative, is exposed to natural light under a red filter (the optimum time must be ascertained by trial). The red light decreases the excessive blackening in the image of the shadows without acting to an appreciable extent on the image of the high lights (Strauss, 1928). Similar results have been obtained by a single printing in yellow light, the maximum gamma passing thus, for instance, from 1·4 to 1 (F. Formstecher, 1929).

Among others, the amidol developer recommended for bromide papers (§ 563) may be used, or the following formula (Kodak)—

Metol-hydroquinone Developer—

Metol	18 gr.	(2 grm.)
Soda sulphite, anhydrous	½ oz.	(25 grm.)
Hydroquinone	53 gr.	(6 grm.)
Soda carbonate, anhydrous	264 gr.	(30 grm.)
Potassium bromide, 10% solution	45 min.	(5 c.c.)
Water, to make	20 oz.	(1,000 c.c.)

It is sometimes recommended to develop soft or normal gaslight papers in a solution of only half the strength of that used for the vigorous grades. The time of development must in that case be doubled. This method possesses neither advantage nor disadvantage. But dilution of the solution must be avoided when developing vigorous papers.[1]

A comparatively recent vogue has given rise to numerous researches on means for giving to prints on silver chloride paper a bluish black tone, similar to that obtained indirectly by curtailed gold toning. This bluish tone can be obtained directly by development with amidol (§ 387) or metol-hydroquinone with a very slight bromide content (which leads to the formation of yellow or grey fog). It seems then to be due to the silver being less dispersed than in black tone images, and especially in warm tone images. Many substances, first used to protect the emulsions against fog, have been found to give this bluish tone, which is generally less modified by drying at a high temperature than are warm tones or neutral black. Several of these substances can be introduced either into the emulsion, baryta undercoating, anti-abrasion overcoating, or developer.

The first adjuvant used for developing bluish tones in any developer seems to have been quinine hydrochloride (K. Kieser, 1928). Very numerous substances, of which many are not easily obtainable commercially, have been suggested for this purpose (A. Steigmann, 1931; A. Seyewetz, 1932, 1935; G. Schwarz, 1936). One of the best seems to be quinoline[2] in concentrations of 1/2,000 to 1/5,000. Besides organic

[1] Stale gaslight papers frequently show a marginal veiling, more or less extensive. This can frequently be avoided by increasing the quantity of bromide in the developer to such an extent as to require double or even four times the normal exposure. The prints are then of a more or less pleasing warm black in colour.

[2] Quinoline is an oily, colourless or yellowish liquid with a disagreeable smell, present in coal-tar and in the oil obtained by pyrogenation of bones. It is a very

substances, a mineral substance, sodium fluoride, at a concentration of 0·4 per cent has also been suggested for developing bluish tones (I.-G. Farbenindustrie, 1934).

The slightest traces of hyposulphite in the developer usually prevent bluish tones, even if the adjuvant tending to give these tones is increased in quantity.

573. Method of Development. Development of gaslight papers is far too rapid to allow of the use of the Watkins method, recommended for bromide prints.

The beginner, or the occasional printer, to whom some rule is necessary for testing the time of exposure, should develop for a constant time. With the metol-hydroquinone developer given above, the normal time of development for most papers of this type will be from 20 to 40 seconds at a temperature of 65° F., or from 30 to 60 seconds at 55° F. (B. T. J. Glover, 1924). 30 seconds may be selected as a constant time of development at average temperatures, this time being increased to 60 seconds if the temperature falls below 55° F. Under these conditions it is very easy to determine systematically the correct exposure (§ 553).

The instructions issued by the manufacturers almost always specify the normal time of development in the solutions which they recommend, and their instructions should be followed.

At too low a temperature it is difficult to obtain vigorous images; a developer which is too warm tends to produce fog, either a grey veiling or yellow stain. A solution containing insufficient carbonate, or a developer too dilute or exhausted by previous use, will produce white patches with irregular outlines, suggesting that the paper has not been uniformly coated with emulsion. This is especially the case if the paper has been kept under such conditions that the emulsion has absorbed an appreciable quantity of moisture.

A developer which is too warm will often give images of a bluish-black, suggesting an insufficient proportion of bromide in the solution; the whites are also stained or veiled.

An acid stop bath is necessary to stop the action of the developer at the desired moment. In the absence of an acid bath between development and fixing, an acid fixing solution must be used, and the print kept on the move in it, so as to avoid development continuing in particular parts.

weak base, a little denser than water and slightly soluble in water (0·6 per cent at normal temperature), but much more soluble in alcohol. To facilitate dosage it is preferably used in alcohol solution.

(*e*) Transparencies in Various Tones

574. Warm Tones by Development. Images in warm tones obtained by direct development are formed of colloidal silver of ultra-microscopic size and bright colour, yellow, red, or purple, mixed with a greater or lesser proportion of black reduced silver of microscopic size.[1] These images of very fine grain are obtained by development in a solution containing at least a small quantity of a solvent of the salts of silver—sodium sulphite, ammonium bromide, or ammonium carbonate either added to the developer or formed in the bath by reaction between the ammonium bromide and another carbonate. This solvent action is facilitated in proportion to the fineness of the grain of the emulsion itself (non-ripened emulsions or only slightly ripened, prepared with silver chloride or silver bromide, or a mixture of these two halides), the size of the grain exercising a much greater influence than the nature of the halide.[2] It will be seen later (§ 578) that positive emulsions intended for black tones can be used for the production of images of warm tones by development in solutions to which have been added more powerful solvents, or in more concentrated solutions. But the colours so obtained are not usually so pure.

In a developer suitable for obtaining warm tones, the image changes in colour during the various phases of development on account of the progressive increase in the size of the particles of reduced silver. These colours, examined in white light after fixing, washing, and drying, are successively—

Yellow; Red; Brown; Sepia; Black.

This succession of colours is absolutely independent of the time of exposure and of the light; the same colours are found, time after time, in any one developer at the same temperature with identical times of development (A. Goderus, 1896). In developing solutions which differ slightly in composition—such differences as are due to variations in strength of commercial

[1] We should mention the possibility of obtaining images in various tones by means of developers giving coloured oxidation products or capable of giving coloured additive compounds (§ 350).

[2] Pure gelatino-chloride emulsions are rarely used, as they readily produce dichroic fog under the conditions of development necessary for obtaining warm tones.

materials, or in solutions prepared by varied dilution of stock solutions—the same colours occur when the contrast of the image reaches the same value, or the development factor is the same (note to § 202) (S. H. Wratten, 1910). It is only for convenience in working—i.e. for passing more or less rapidly from one colour to another—that it is recommended to use developers differently constituted, or diluted in different proportions, for obtaining the various colours mentioned above.

However, at least with certain emulsions, a very dilute developer does not give tones beyond red or brown, however long development may be prolonged, in spite of the increase in gamma which results from this prolongation of development (L. Lobel and M. Dubois, 1929).

The fact that the colour depends essentially on the contrast factor of the developed image enables one to judge in advance that negatives of different degrees of contrast are not equally well suited for obtaining images in various colours. A negative which will give a good transparency in sepia, the colour most frequently desired, with good tone value and contrast, will yield only a weak red image. And, inversely, a negative producing a good red positive with correct contrast will give, necessarily, a sepia image with far too strong contrasts. On the other hand, the gradation not being the same in all brands of plates, a certain negative will be better suited to one than to another for obtaining a particular colour, whilst another negative of different character might very well produce a more satisfactory result on the brand of plate which had been rejected in the preceding example.[1] These differences become speedily evident after a certain amount of experience has been obtained.

575. **Exposure.** The statement that the colour of the image is independent of the exposure,[2] under given conditions of illumination, does not imply that the exposure should be the same whatever may be the colour desired.

Under the conditions of development determined upon, the density of a certain part of the image is greater in proportion as the exposure time has been greater, or, more exactly, the light-action, that is, the time of exposure multiplied by the intensity of the light. For a given degree of development, the image may not appear in those parts of the subject which form the densest parts of the negative unless the exposure has been greater than a certain minimum—a minimum which varies with the time of the development on account of the regression of the inertia (§ 337) in a developer rich in bromide, as is usual in developers for warm tones.

The exposure must consequently be prolonged in proportion to the extent to which development is shortened for tones more or less red, so that details in the lights may appear with sufficient strength before development is stopped.

According to the plate used, the time of exposure necessary for obtaining red tones will be from 10 to 20 times that which is necessary for black tones, the same illumination being used. No general rule can be given, and, for a first trial, it is best to follow the instructions given by the makers of the plates. These preliminary tests can be made on pieces cut from one of the plates, the determination of the time of exposure being carried out under the conditions already desscribed (§ 553). The same test will furnish experimental proof of the fact that the colour of the image is independent of the time of exposure. The parts of the test piece, though exposed for different times, will all be identical in colour after development, and will differ from each other only in the density of the image and the rendering of the details in the lights.

576. **Development.** It is almost impossible to judge the colour and the density of the image properly in coloured light during development. A yellow light weakens considerably the contrasts of a sepia or red-chalk image, while a green light exaggerates them. In addition, both the colour and the density of an image change considerably on drying, as may be easily ascertained by examining a plate which is partially dry. An image which is pale yellow when wet can become an intense red-chalk after drying.[1]

Thus, for uniform results as regards colour, plates should always be developed in solutions

[1] Although scarcely probable, the photographer may not have any preference for a particular colour. In such cases, plates prepared for warm tones can be used with negatives of very different characters by giving a suitable exposure in each case, or, when printing from a particular negative, allowing a very great latitude in the exposure. It may be said that it is very easy to obtain a result on these plates, but it is still a somewhat delicate operation to secure a perfect image of the colour chosen.

[2] A proof of this statement is the uniformity of the tone at the various points of the same image in spite of the considerable variation in exposure received when passing from the image of the high lights to that of the shadows.

[1] These reversible variations are due to the increase in refractive power of the gelatine as it gradually dries (§ 520, footnote).

identical in composition, and used at the same temperature and for the same time, or else the times of development should be worked out by the Watkins system. Although, as has been previously shown (§ 569), this method is inapplicable in the case of transparencies of black tone, for which development is done by judging the light tones, its use is perfectly sound in the case of plates of warm tones when a certain colour is desired. It has been shown that the colour of the image depends essentially on the value of the contrast factor, and it must be understood that the character of the negative is suitable for the colour desired.

A few preliminary tests will soon indicate the "factor" by which to multiply the time of appearance of the first details for obtaining the total time of development corresponding with a particular colour. This may be either in the same developer diluted in different proportions for obtaining tones varying in warmth to different degrees, as the result of longer exposures, in which case the "factor" decreases progressively in relation to the colour from black to red, or else in developers of different composition for obtaining various colours.

When transparencies are intended for projection in the lantern, it is well to suspend all judgment until they are seen on the screen. The appearance of the projected image is frequently very different from that which it presents when simply held up to the light.[1]

577. A widespread belief exists that hydroquinone is the only developer which can be satisfactorily employed for warm tones. As a matter of fact, a large number of developers can be used, provided that a "factor" suitable for that particular developer is employed.

Formulae for developers are here given which are suitable for a large variety of commercial plates—

Hydroquinone—

Soda sulphite, anhydrous	300 gr. (35 grm.)
Hydroquinone . .	90 gr. (10 grm.)
Soda carbonate anhydrous	260 gr. (30 grm.)
Ammonium bromide .	18 gr. (2 grm.)
Potassium bromide .	26 gr. (3 grm.)
Water, to make . .	20 oz. (1,000 c.c.)

To be used without dilution for black, and diluted about 10 times for red tones.

[1] A transparency which is considered defective in colour may be improved by gold toning (§§ 536 and 537). The tones tend to become purple, but the image loses nothing of its transparent quality.

Glycin (Vannier, 1920)—

Soda sulphite, anhydrous	1 oz. (50 grm.)
Potassium carbonate .	350 gr. (40 grm.)
Glycin . . .	175 gr. (20 grm.)
Potassium bromide .	130 gr. (15 grm.)
Water, to make . .	20 oz. (1,000 c.c.)

For use, to be diluted from 5 to 20 times, according to the colour desired.

Acid Amidol (G. Balagny, 1906)—

Soda sulphite, anhydrous	. 45 gr. (5 grm.)
Amidol . . .	. 22 gr. (2·5 grm.)
Sodium bisulphite, lye	. 6½ dr. (40 c.c.)
Ammonium bromide .	. 45 gr. (5 grm.)
Water, to make . .	. 20 oz. (1,000 c.c.)

Only sufficient for immediate use should be prepared. The action is very slow, and it is not necessary to dilute the solution for obtaining red tones.

578. Warm Tones on Black-tone Plates. Development for warm tones on plates intended normally for black tones was formerly a question of some interest, when making transparencies by enlargement or reduction, in order to avoid the unduly long exposures necessitated by the use of the slow plates specially made for warm tones. The numerous processes of after-toning have, however, greatly altered the situation.

With regard to obtaining warm tones, the following is a summary of the methods of working (L. P. Clerc, 1897). The rules for determining the correct exposure and for controlling development are the same as those given in the preceding paragraphs.

Among others, the following developer may be employed—

Soda sulphite, anhydrous	. 350 gr. (40 grm.)
Hydroquinone . .	. 90 gr. (10 grm.)
Caustic soda . .	. 1 oz. (50 grm.)
Water, to make . .	. 20 oz. (1,000 c.c.)

to which should be added, for each ounce (or 100 c.c.) the quantity of a 10 per cent solution of ammonium bromide specified in the following table—

Colour	Quantity per oz. (or 100 c.c.) of 10% solution ammonium bromide	Relative Exposures	Relative times of development at 60° F.
Warm brown	25 min. (5 c.c.)	20	1
Purple brown	50 min. (10 c.c.)	35	3
Purple	75 min. (15 c.c.)	60	6
Red (carmine)	100 min. (20 c.c.)	100	8

The images thus developed are white or yellow when viewed by reflected light. They frequently show a slight veiling which can be easily removed by treating with a surface reducer (§§ 459 and 460).[1]

The addition of a suitable proportion of thiocarbamide (i.e. thio-urea) to a developer for warm tones, allows blue and violet tones to be obtained (S. H. Wratten, 1910). The action of these developers is, however, exceedingly slow at temperatures lower than 65° F. The quantity of thiocarbamide added must be very exact; and it is not possible in this case to control development by the Watkins method. The only practicable method is to develop for a constant time, which necessitates solutions exactly proportioned and used always at the same temperature. The exposure must be found by preliminary tests, as previously described.

The working developer is prepared from three stock solutions—

(A)	Metol	22 gr. (2·5 grm.)
	Soda sulphite, anhydrous	130 gr. (15 grm.)
	Hydroquinone . .	90 gr. (10 grm.)
	Soda carbonate, anhydrous	130 gr. (15 grm.)
	Water, to make . .	20 oz. (1,000 c.c.)
(B)	Ammonium carbonate .	2 oz. (100 grm.)
	Ammonium bromide .	2 oz. (100 grm.)
	Water (cold), to make .	20 oz. (1,000 c.c.)
(C)	Thiocarbamide . .	26 gr. (3 grm.)
	Ammonium bromide .	9 gr. (1 grm.)
	Water, to make . .	20 oz. (1,000 c.c.)

These solutions are used as shown in the following table—

Colour	Developer			Relative exposures, approx.
	Solution A	B	C	
	dr.	dr.	dr.	
Pure black .	7	½	½	1
Blue-black .	6	1½	½	2
Blue . .	5½	2	½	4
Violet . .	5	2½	½	8

The colours obtained by suitable combination of exposure and development are very transparent and excellent in quality.

[1] It may be noted that it is practicable to re-develop in a developer for warm tones, a transparency previously developed to a black and fixed. To obtain this result, the silver must be converted into chloride, e.g. in a solution of bichromate acidified with hydrochloric acid. After this bleaching, the plate is rinsed, exposed to light, developed, fixed, and washed.

(*f*) Chloro-bromide Papers for Warm Tones

579. General Considerations. The emulsion of chloro-bromide papers is sufficiently slow for working by yellow light, but the light should not be so bright as when gaslight papers are being used.

As a general rule, the only tones for which these papers are used are those comprised between a pure black and warm brown. Some methods of working, however, will enable a scale of colours to be obtained by direct development on some of these papers, affording as long a range as that given by transparency plates for warm tones. These methods of working are not given, the same tones being obtainable on all development papers by subsequent toning.

These papers are extensively used in professional photography. They yield results of a quality comparable to those given by gaslight papers, but do not call for such power of lights in the printing machines and enlarging apparatus. In addition, they avoid the necessity for the after-process of toning for obtaining the warm black colour so greatly in favour. Their long scale of gradation renders these papers very suitable for printing from negatives of landscapes with clouds, which are frequently very difficult to reproduce on bromide papers.

The principles on which the warm tones are produced are the same as those previously described in regard to transparency emulsions for warm tones. In this case, also, the production of an image of a certain desired colour with correct tone values requires that the extreme range of densities of the negative should be comprised within certain limits. But, if a particular colour is not essential, these papers can adapt themselves to negatives differing considerably in character, or, when using the same negative, adjust themselves to wide variations in exposure.

580. Methods of Working. The beginner or the photographer who uses one of these papers for the first time, or even the experienced worker, should endeavour to print from a negative specially suited to papers of this kind, and then find the correct time of exposure by the test method already described (§ 553).

With regard to these test pieces at least, or, in the absence of tests, the first print taken from a negative, the development should be controlled by the Watkins method, in accordance with the following general instructions, or else by tentative determination of the value of the Watkins

" factor " (§ 344) corresponding with that tone desired with a certain paper developed in a given solution.

Although some papers for warm tones may only give the desired results when they are used with the developer specified by the manufacturers, most will work perfectly with the following developer (B. T. J. Glover, 1924)—

Metol-hydroquinone Developer for Warm Tones.

Metol	18 gr.	(2 grm.)
Sodium sulphite, anhydrous	½ oz.	(25 grm.)
Hydroquinone . . .	70 gr.	(8 grm.)
Soda carbonate, anhydrous .	160 gr.	(18 grm.)
Potassium bromide . .	18 gr.	(2 grm.)
Water, to make . . .	20 oz.	(1,000 c.c.)

For use, this solution should be mixed with an equal volume of water.

A warm black tone is obtained by developing for a total time, according to the particular paper in use, ranging from 4 to 6 times the time of the appearance of the first details of the image. A brown tone is obtained by adopting as a " factor " a value ranging from 2½ to 4, to be ascertained by trial.

The following table has been taken from *Print Perfection*, page 49 (B. T. J. Glover). The times of development are for a developer used at a temperature of 68° F. The strength of the light was considerably greater for the second paper than for the first—

	Wellington BB		Kodura Etching Brown	
	Warm Black	Brown	Warm Black	Brown
Exposure, relative .	1	4	1	4
Time of appearance of image . . .	40 sec.	28 sec.	45 sec.	30 sec.
Total time of development . . .	160 ,,	70 ,,	180 ,,	75 ,,
Watkins factor . .	4	2½	4	2½

On account of the extreme fineness of the grain of these images, it is often well to avoid the use of acid fixing baths, as they tend to weaken the half-tones. At any rate, prints should not be allowed to remain in an acid fixing bath for a longer time than is necessary for ensuring complete fixation.

(*g*) Fixing, Intensifying, and Reducing Development Prints and Transparencies

581. Fixing Developed Images. The action and chemistry of fixing are the same as in the case of negatives (§§ 400 and 401). Most frequently acid fixing baths will be used, and in warm weather the fixing solutions containing alum already given (§ 409).

Some varieties of paper tend to tint slightly in a fixing bath containing chrome alum, especially if it is acidified with sodium bisulphite only. Before first using a new brand of paper, the following simple test may be made. Take two strips of the unexposed paper, fix one of them in a plain solution of hypo, and the other in a fixing solution containing chrome alum. After washing and drying, these two strips should be compared in a strong light. If the whites of the paper fixed in the solution containing chrome alum are tinted, however slightly, chrome alum should on no account be used; the hardening of the gelatine can be ensured, if it is necessary, by common alum.

The use of alum must be entirely avoided with prints intended for Bromoil or any pigment process (§ 698).

It has been sometimes noticed that fixing in an acid bath may be the cause of defective sulphide toning with certain papers (§ 587 *et seq.*), the whites showing a tendency to become stained; and more so according to the proportion of bisulphite in the fixing solution (Moss, 1920). The prints made on such papers which are to be sulphide-toned may with advantage be fixed in a solution of hypo rendered alkaline with a little sodium carbonate.

It should be added that when an acid fixing solution is used at a relatively high temperature, there is a risk of yellow or brown stains occurring by local sulphuration of the image or of bromide of silver not yet dissolved.

582. The fixing of prints is carried out preferably in deep dishes containing fixing solution of a depth of at least 2 in. A paddle of hard wood should be provided, of broad shape, and with the sharp edges rounded first with a rasp and then with glass-paper. The prints can then be completely immersed without having to put the fingers in the solution.

Certain papers float on a solution which contains 25 per cent of hypo, an average strength for fixing baths for negatives. In such cases it is necessary to dilute the bath sufficiently to reduce its density until the prints tend to sink to the bottom of the dish. It is well known that silver images are reduced during fixing by the free access of atmospheric oxygen to their surfaces (§ 399). Moreover, parts of the prints protruding from the solution may continue to develop, if they have not been through an acid

bath between development and fixing; or yellow staining of the same character as dichroic fog may result (§ 433). Similar defects may arise with prints fixed face downwards if air-bubbles have been imprisoned under them.

The duration of fixation in a new bath of 20 per cent strength, used at 65° F., is about 1 to 2 minutes. The immersion should not be prolonged beyond 5 minutes. The fixing bath is being constantly diluted by the liquid impregnating the prints placed in it, and its strength is reduced to about one-half after 350 quarter-plate prints have passed through a pint (20 oz.) of bath. Never try to fix more than 200 quarter-plate sheets in a pint if only one fixing bath is being used. Excessive acidity (which may be due to leaving the prints too long in a very acid stop bath) retards fixation and favours the formation of the insoluble complex salt.

Whenever possible, fixing should be done in two successive baths (§ 406).

Prints should always be introduced into the bath singly, and moved every now and then, the lowest print being brought to the top, and so with all in succession. The prints should also be taken from the bath one by one to be transferred either to the second fixing solution or to the first washing water.

With bromide papers only, an increase of contrast is sometimes noticed when the prints are placed in the fixing bath, either neutral or acid.

583. There is, unfortunately, no change in the appearance of prints to show when they are completely fixed. It is desirable, therefore, to ascertain by experiment the time necessary for fixing the various papers in use.

The following method may be adopted. A strip of the paper to be fixed should be taken and immersed, for about half its length, in a solution of potassium iodide, of about 1 per cent strength. The chloride or bromide of silver will be thus converted into light yellow iodide of silver, strongly visible in contrast with the whiteness of the silver salts not so converted, and also much less soluble than either the bromide or the chloride of silver. The time necessary for the disappearance in the fixing bath of the line of demarcation, between the iodized portion and the part left unchanged, is certainly longer than the time necessary for fixation. It must be borne in mind, however, that the fixation of an isolated strip is much more rapid than the fixing of a number of prints one on top of the other; they protect each other against the action of the solution. If fixing is done for twice the time ascertained by this test, it may be taken as complete.

It is well to ascertain from time to time, either by repeating the test just described or by one of the methods previously indicated (§ 498), that the useful life of the bath has not been overstepped. This is a matter of more vital importance than in the fixation of negatives or lantern-plates.

The recovery of the silver from used fixing baths can be done by the methods already given for fixing solutions for negatives (§§ 412 to 414).

584. **Intensification.** The intensification of a transparency, or a print on paper, allows of increasing the strength of a print when development has yielded insufficient contrast, or of remedying an unpleasant tone.

Most of the toning processes described in the succeeding paragraphs strengthen the image, and can be used for intensifying when a black tone is not essential.

Among the various methods of intensification described for negatives, the only one which is suitable for strengthening prints on paper or transparencies is the chromium intensifier.[1] (§ 454). The use of mercury intensifiers should be especially avoided; they spoil the transparency of the shadows, increase the graininess to a disagreeable degree, and only yield permanent results when the whole of the mercury salts formed in the image have been reduced to the state of metallic mercury.

585. **Reduction.** The various reducers given for negatives (§§ 457 to 464) can be used equally for transparencies, under the same conditions and by observing the same precautions.[2]

A very complete study of the reduction of prints made on the different types of development papers has been carried out by L. A. Jones and C. E. Fawkes (1921). It contains a number

[1] Immersing the bleached print for a few seconds in a solution of sodium carbonate, of about 5 per cent strength, greatly facilitates the elimination of the bichromate. With this exception, the process is exactly the same as previously described for intensifying negatives.

[2] It is also practicable to reduce exaggerated contrasts in a transparency by bleaching it in a mixture of potassium ferricyanide and sodium chloride (common salt) or potassium bromide. After washing, it should be exposed to light. The result is a brown image if chloride is used, or grey, if bromide is employed. If thought well, after darkening, the excess of chloride or bromide may be removed by fixing. The image may also be treated in a mixture of ferricyanide and potassium iodide; the image, consisting of silver iodide, is insensitive to light, and is light yellow when seen by reflected light and brown by transmitted light.

of photometric measurements of prints before and after reduction, and shows that all reducers do not act in the same manner on the comparatively coarse-grain images of bromide prints and on the fine-grain images of gaslight and chloro-bromide prints.

An acidified solution of permanganate, which acts as a surface reducer on negatives (§ 460), reduces proportionately all the densities on almost all papers, and therefore best compensates for over-development. It should be used of much lower strength than for negatives, e.g. the following, made up at the time of use—

Potassium permanganate, 1% solution	1½ dr. (10 c.c.)
Sulphuric acid, 1% solution	5½ dr. (35 c.c.)
Water, to make	20 oz. (1,000 c.c.)

If the whites of the print become slightly stained to a brown tint, which is not very likely on account of the great dilution of the reducer, the print, after a rapid rinsing, should be immersed for a few moments in a very weak solution of sodium bisulphite.

For reducing the light tones without producing any appreciable effect on the heavy deposits of the image, Farmer's reducer may be used very dilute (§ 459), or, alternatively, a mixture of iodine and cyanide. The latter is preferable, as it leaves no trace after reduction, while ferricyanide frequently leaves a yellow coloration which, however, will usually disappear in a few minutes in a new acid fixing bath.

Formulae for these two reducers are here given. They are practically equivalent, and may be used with advantage for prints taken from negatives with insufficient contrast for the paper employed when the exposure has been chosen for obtaining the maximum black. Each of these reducers should be prepared in a small quantity only, and at the time of using; their activity disappears in a few minutes.

Farmer's Reducer—

Hypo., 10% solution	5 oz. (250 c.c.)
Potassium ferricyanide, 1% solution	5 oz. (250 c.c.)
Water, to make	20 oz. (1000)

Iodine and Cyanide[1] *Reducer*—

Iodine, 1 % solution[2]	9½ dr. (60 c.c.)
Sodium cyanide, 1% solution	1½ dr. (10 c.c.)
Water, to make	20 oz. (1,000 c.c.)

[1] Cyanides are most violent poisons, even in very small quantities, and are supplied only for commercial use (see § 398, footnote).

[2] Iodine is insoluble in water but dissolves very readily in concentrated solutions of potassium iodide. It forms a dark brown liquid which can be diluted as much as required. To prepare the *iodine solution* above mentioned 90 gr. of potassium iodide should be dissolved in about 1 oz. of water. 45 gr. of iodine should be added and by shaking the solution from time to time the iodine will be completely dissolved in about an hour. Iodine being very volatile, the solution should not be heated. When it is completely dissolved, sufficient water is added to bring the total volume up to 10 oz.

One or other of these solutions is generally used for clearing the margins of prints which are slightly veiled or defaced by stress or abrasion marks[1] (§ 548); also for local reduction with a brush.[2]

For reducing the deep shadows of a print without appreciably weakening the details in the light tones, the ammonium persulphate reducer should be employed (§ 463). For avoiding the deepest shadows being reduced to such an extent that they possess less strength than the intermediate tones, it is necessary, with some very fine-grain papers, to add a small quantity of a chloride to this reducer. Only the quantity required for immediate use should be prepared.

Persulphate Reducer for Prints on Development Papers —

Ammonium persulphate	½ oz. (25 grm.)
Sulphuric acid, 1% solution	4¾ dr. (30 c.c.)
Sodium chloride (common salt), 1% solution	4 dr. (25 c.c.)
Water, to make	20 oz. (1,000 c.c.)

[1] These same reducers are also used for the complete removal of an image which has been used as the basis of a line drawing in waterproof ink.

[2] Reduction with a brush is much more easily carried out with an alcoholic solution on the dry print. A mixture of equal parts of the following two solutions should be used (T. H. Greenall, 1926), diluted, if required, with an equal quantity of methylated spirit for working on light tones—

Iodine flakes	175 gr. (4 grm.)
Methylated spirit	10 oz. (100 c.c.)
Thiocarbamide (thio-urea)	350 gr. (8 grm.)
Water	10 oz. (100 c.c.)

As soon as the image has been treated with a water-colour brush moistened with the reducer, a larger brush thoroughly saturated with methylated spirit is passed over it, and the spirit remaining on the print blotted off at once. This sequence of operations is repeated until the desired effect is obtained. When the reduction is completed, the print should be placed *without intermediate rinsing* in a fixing bath and then washed in the usual manner. Rinsing before fixing induces risk of staining by silver sulphide, on account of the decomposition in water of the complex formed by the thiocarbamide and the silver salt.

This reducer is used specially for reducing the exaggerated contrasts of a print from a negative too strong in contrast for the paper employed, when the exposure has been timed to obtain full details in the light tones, and thus causing the shadow details to be lost in the black deposit.

(*h*) Toning and Tinting of Transparencies and Prints

586. Introduction. Whatever may be the method of toning selected, success will be obtained only if all the previous operations have been carried out with the utmost care. It is essential that plates, films, and paper prints should have been fixed in two baths and washed very thoroughly.

Methods of toning vary as regards the degree of success with which they may be used with images in which the silver exists in grains very different in size; e.g. bromide papers for black prints, on the one hand, and gaslight papers on the other. Various conditions in working, such as the composition of the developer, more or less prolonged development, etc., can exercise a marked effect on the final colour of the toned image.

The fact that the silver image is converted into one consisting of a different substance involves necessarily a variation in the value of the different densities. In most cases toning is an intensification process; in a few rare instances it occasions a slight reduction in depth.

While a very slight grey deposit is generally passed unnoticed, a coloured tone of corresponding depth is almost always glaring. It follows that images to be toned should have perfectly clean whites.[1]

The reagents used in certain toning processes are retained very tenaciously by the paper itself or by the substratum. Special precautions are therefore necessary for toning prints on paper which do not apply when toning images on an inert support.

Toning processes are almost infinite in number, though many of them have lost their interest through the introduction of the new methods, which consist in converting the silver image into a mordant capable of fixing very various dyes. This method allows the choice at will of any desired colour under the most economical conditions, without any variation in working other than the choice of a dye, or a mixture of dyes, of a suitable shade.

Before entering upon a description of the principal methods of toning, it is desirable to emphasize, as strongly as possible, the discretion which should be exercised in the production of prints in bright colours (§ 501).

All toning baths attack all metals as they attack silver. Metal containers or accessories, even enamelled or varnished, cannot be used for these operations.

587. Sulphide Toning: General Considerations. Sulphide of silver, which, in the mass, forms black pieces, assumes various colours, from yellowish-brown to purplish-brown, when finely divided. Sulphide of silver is absolutely unchangeable and unaffected by atmospheric conditions. When sulphiding the silver image obtained by development, it is desired to obtain a sepia-brown or warm brown colour, more transparent in the shadows than the original black silver image, and avoiding the yellow-brown "mustard" tone at one extreme and the purple at the other. Yellowish tones are generally due to over-exposure in conjunction with development which has been stopped too soon, in order to prevent the image from becoming too dark. Purple-brown or chocolate tones are mostly those resulting from images on rapid papers when the exposure has been too short and development has been forced. Prints developed with metol, without hydroquinone, will not yield fine sepia tones. Prints developed with amidol give rich tones easily.[1]

The conversion of the silver into sulphide of silver can be effected by direct combination of the silver and sulphur, the latter being obtained from a colloidal solution in which the particles are extraordinarily fine, as, for example, in a solution containing hyposulphite of soda and alum (L. Baekeland, 1888), or an acid (Lumière and Seyewetz, 1912). A weak solution of poly-sulphide may also be used for the direct sulphuration of the silver, as purchased (J. Desalme, 1913), or prepared at the time of use (Kropf, 1910); it may be compared with a solution of sulphur in a mono-sulphide.

Sulphuration can also be effected indirectly, the silver being first converted into a salt such

[1] As a precautionary measure, prints intended for toning should be cleared in the hypo and ferricyanide reducer, used very dilute, and preferably in alkaline solution.

[1] It is very interesting to compare, after sulphuration in identical conditions, prints from the same negative on the same paper, prints that look identical prior to toning but obtained by taking advantage of latitude in exposure (§ 557), and prints developed in different developers.

as chloride or bromide—bleaching of the image—which, by means of a second operation, is converted into sulphide of silver by means of a solution of sulphide (Blake Smith, 1902), of a sulphiding mixture, or even, sometimes, by means of gaseous sulphuretted hydrogen.[1]

Except when using odourless sulphiding mixtures (§ 589), sulphiding must always be carried out at a sufficient distance from all stocks of sensitive photographic materials, and from rooms in which they are handled in their original condition, in order to avoid the intense fog which is always caused by the action of traces of sulphuretted hydrogen on photographic emulsions.

The indirect process of sulphiding[2] is the method which, almost always, is the best for lantern plates and prints on bromide papers. Direct sulphiding is most suitable for the fine-grain images on gaslight papers, although there is no hard and fast rule.

Nevertheless, compensation is thus obtained for the tendency of indirect toning to give more yellow tones and for the tendency of rapid emulsions to yield purple tones, and inversely.

Transparencies for sulphide toning ought to be kept rather thin, no appreciable effect being apparent in a very dense transparency seen by transmitted light.

588. Bleaching for Sulphide Toning. Most frequently the silver forming the image is converted into bromide of silver by immersion in a solution containing ferricyanide and bromide of potassium.[3] The silver may also be converted into chloride by using a solution of permanganate and a chloride, suitably acidified,[1] the final colour of the image then tending to become purple.

Either of the following solutions may be used—

Potassium ferricyanide .	260 gr. (30 grm.
Potassium bromide .	105 gr. (12 grm.)
Soda carbonate, anhydrous	130 gr. (15 grm.)
Water, to make . .	20 oz. (1,000 c.c.)

This bath may be used until exhausted.[2]

The following more expensive bath gives sepia tones with much greater certainty—

Potassium ferricyanide .	260 gr. (30 grm.)
Potassium iodide . .	90 gr. (10 grm.)
Ammonia . . .	3 dr. (20 c.c.)
Water, to make . .	20 oz. (1,000 c.c.)

The use of metallic salts, such as cupric chloride or mercuric chloride, in bleaching solutions for toning, is to be studiously avoided. They form a salt, cuprous or mercurous, which intensifies the image and destroys the transparency of the deposit.

Prints bleached directly they are taken from the washing water after fixing tend more towards purplish tones than dried prints. The tone of prints which have been dried is not modified by a preliminary soaking before bleaching.[3] The time of immersion in the bleaching bath, after the complete conversion of the initial black silver into the white halide salt, has no effect on the final tone of the image;[4] nor has

[1] Merely as a matter of curiosity we may mention that the sulphide of silver of an image thus toned can be replaced by other sulphides if the print is placed in the solution of a compound of the desired metal with a thiosulphate, sulphite, or thiocarbamide (E. Asloglou, 1936).

[2] Toning with two baths often gives less warm tones on matt papers, than on glossy ones of the same brand treated in identical conditions.

[3] The ferrocyanide, produced in the absence of a soluble bromide, is only formed very slowly. The equation of the reaction

$$2\,Ag + Fe_2(CN)_{12}\,K_6 + 2KBr = 2AgBr + 2Fe\,(CN)_6K_4.$$

renders it easy to calculate the proportions of ferricyanide and bromide corresponding to their simultaneous exhaustion in the bath—659 and 238, approximately 30 and 11. It is necessary to increase very slightly the amount of bromide calculated by this formula so as to ensure a constant excess of this salt. A used bath may be regenerated by the addition of bromide and a bichromate which will re-oxidize the ferrocyanide to the state of ferricyanide.

It should be noted that the ferricyanide of the bleaching bath will form, in combination with the hyposulphite from an imperfectly washed print, the Farmer reducer, and generate a more or less uniform reducing action on the print.

[1] This solution may be used for the conversion of a sulphided image into chloride, if the colour is not pleasing, or for treating an old print partially sulphurized by atmospheric impurities. If the whites should be slightly tinted by the action of this bath, the staining may be entirely removed, after rinsing the print, in a very weak solution of sodium bisulphite.

[2] The addition of small quantities of ammonia to this bleaching solution avoids the formation of blue stains from particles of iron and the absorption by the gelatine of hydroferricyanic acid, which, by slow decomposition, can give rise to blue discolorations. A large excess of bromide in this bleaching solution tends to reduce the half-tones.

[3] It has been pointed out many times that immersing a print in the sulphide solution, followed at once by bleaching without intermediate rinsing, gives tones intermediate between those produced by direct sulphiding and indirect sulphiding.

[4] Incomplete bleaching of a print in a very dilute solution allows effects of double toning to be obtained, the light tones being formed entirely of sulphide of silver and the shadows of a mixture of brown silver sulphide and black silver. Other effects can also be obtained, after fully bleaching and washing, by partial

the temperature of the bath. If the bromiding bath given above is used, variations in strength due to its gradual exhaustion have no influence on the final colour. The final colour, after toning, however, tends towards yellowness if the washing after bleaching is prolonged. A very short washing after bleaching is sufficient, none of the constituents of the bleaching solution having any influence on the sulphiding. The action of light on the print between bleaching and sulphiding does not in any way influence the final result so long as no visible image is produced.

Bleached prints should be washed for about 10 minutes before being placed in the sulphide solution.

In the course of a very thorough study of the influence of different working conditions on the final colour of the prints toned by this process, E. R. Bullock (1921) has ascertained that when a print, bleached in either of the solutions given above, is placed, before sulphiding, in a solution of sodium carbonate, the final colour of the image is distinctly modified. An immersion of about 10 minutes in a solution of about 0·5 per cent strength of anhydrous sodium carbonate gives tones slightly more purple, the effect being more marked with chloride prints than with bromide. A more concentrated solution is less effective. A few preliminary tests will readily show the best strength of solution for a particular paper and given working conditions.

589. Sulphiding the Bleached Image. Sulphiding is generally done by means of a solution of sodium monosulphide,[1] of a strength of about 1 per cent (prepared at the time of use by diluting a concentrated stock solution), which is thrown away immediately after using. The image is completely converted into sulphide in about one minute.[1]

The use of very weak solutions, or solutions containing an appreciable proportion of hyposulphite, tends towards the production of yellower tones than those by the normal treatment. The use of a polysulphide, e.g. *liver of sulphur*, in place of the monosulphide likewise produces tones more yellow than the normal colour.[2] In sulphiding with a monosulphide, yellow tones are chiefly obtained when prints still impregnated with ferricyanide (the elimination of this salt is very slow when the bleaching bath has not been rendered alkaline) are treated in a partially oxidized solution. The sulphide, which then contains hyposulphite, changes into polysulphide on coming into contact with the residual ferricyanide; the partially dissolved bromide of silver is re-precipitated in the state of yellowish colloidal sulphide of silver (E. E. Jelley, 1932).

re-development in a very dilute developer for warm tones, in full white light, or, by exposing the wet print to a strong light until the image has become visible by direct darkening. After sulphiding, the print will be uniform in colour, formed partly by the silver image and partly by silver sulphide.

[1] The monosulphide of soda, or neutral sodium sulphide, Na_2S, $9H_2O$, occurs in the form of deliquescent crystals, which should be free from discoloration if chemically pure, but which are generally amber-coloured or even a dull green or black on account of the presence of sulphide of iron in a state of very fine division. Sodium monosulphide emits an odour similar to rotten eggs, characteristic of sulphuretted hydrogen. On exposure to the air it is converted slowly into caustic soda, hyposulphite and polysulphides—sulphides containing a larger proportion of sulphur. It must be kept in glass jars, hermetically sealed. It may be kept with advantage under a film of benzine or mineral spirit, which prevents it from absorbing moisture from the air and becoming decomposed. Sodium monosulphide is very soluble in water, especially hot water. Solutions of a strength of at least 20 per cent keep quite well: very weak solutions change rapidly, forming principally hyposulphite, which would dissolve the whole or part of the image instead of sulphiding it. Solutions of monosulphide of soda have, although less strongly marked, the caustic properties of solutions of soda. Concentrated solutions cause the skin to swell, and disintegrate gelatine. To obtain a clear and almost colourless solution from the ordinary samples of monosulphide, the salt should be dissolved in a small quantity of water, and the solution then brought to boiling point and kept there for about ten minutes. On cooling, the sulphide of iron, coagulated by boiling, settles to the bottom of the bottle, and the superanatant clear liquid can then be decanted. In this manner a solution of a strength of 50 per cent can be prepared, which can be diluted when required for use. Sodium sulphide frequently blackens enamelled articles (lead enamels), dishes, sinks, saucepans, baths, etc.; concentrated solutions cannot be filtered through paper, owing to their action on the filter paper. The liberation of sulphuretted hydrogen due to the hydrolysis of these solutions can be diminished by using glycerine or glycol for their dilution.

[1] The use of more concentrated solutions facilitates the formation of a yellowish ground tint by staining the gelatine and the paper base even in perfectly fixed and washed prints. This tint usually disappears in an acid bath (hydrochloric acid diluted with 100 times its volume of water).

[2] The silver sulphide of images sulphided by a polysulphide is not pure sulphide of silver. The disagreeable yellow tones thus obtained are much improved by immersion in a dilute solution of silver nitrate which would have no action on normal sulphide of silver. After this treatment of all images sulphided to a yellow tone, the prints must be rinsed, placed in a fresh fixing bath and washed again (K. C. D. Hickman and W. Weyerts, 1933).

The essential condition for obtaining pure whites is that the gelatine should be perfectly free from every trace of a residual salt of silver arising from imperfect fixing. To ensure this condition, the fixing must have been done in a 20 per cent solution of hypo containing not more than 18 gr. of bromide of silver in 20 oz. of solution (2 grm. per litre) (Lumière and Seyewetz, 1923).

It has been proposed to replace the monosulphide of soda by compound sulphides which would deposit another sulphide on the brown image. For example, sodium sulphoantimoniate (Schlippe's salt) deposits on the silver sulphide formed a little orange-red sulphide of antimony (Carey-Lea, 1865). The resulting image is of red-chalk colour, but with an entire loss of transparency and frequently with the whites more or less tinted.

The surest means for avoiding any smell (and the fogging due to sulphuretted hydrogen) is to carry out the sulphiding of the image, without using sulphide, with a solution containing both sulpho-urea and an alkali. The latter transforms into sulphide of silver the insoluble compound which has first formed between the silver halide and the sulpho-urea. (I.-G. Farbenindustrie, 1931). Caustic alkali can be replaced by a carbonate (A. Seyewetz, 1934). Variations in the final tone result from a variation in the proportions of the two components—

Thio-urea . .	4½–18 gr. (0·5–2 grm.)
Caustic soda (10% solution) . .	3–12 dr. (20–80 c.c.)
Water, to make .	20 oz. (1,000 c.c.)

590. Direct Sulphiding with Hypo-alum. When a solution containing hyposulphite and common alum is boiled for a few moments (§ 403), the precipitate which is formed first consists chiefly of alumina. If this mixture is allowed to cool, the reaction continues for a long time. In addition to the sulphur which is deposited, the liquid must be considered as being a solution of colloidal sulphur. A print immersed in this solution becomes sulphided very slowly if the bath is cold, but rapidly at a temperature of 120° to 140° F. New baths always attack, more or less, the details in the light tones of the prints which are toned in them; old baths are free from this defect and yield very fine tones. Consequently, used solutions should never be thrown away but replenished from time to time with a quantity of new solution. New baths can be "ripened" by dissolving a little silver nitrate in them, or by adding trimmings of sensitive paper. The fact that the toning bath always contains silver salts led Baekeland to advise subjecting prints toned in it to re-fixation in a new bath. It is to be regretted that this precaution is usually neglected, with the result that a slow yellowing of the whites of the prints may ensue.

The toning bath may be prepared as follows: 4 oz. of hypo should be dissolved in 20 oz. of hot water (200 grm. in 1 litre). To this should be added 400 gr. (45 grm.) of common alum, powdered. The mixture should be shaken, boiled for 2 or 3 minutes,[1] allowed to cool to about 150° F., and then addition made of about 5 gr. (0·5 grm.) of silver nitrate dissolved in about ¼ oz. (15 c.c.) of water, with sufficient ammonia to re-dissolve the precipitate which the first drops of ammonia produce. The bath must be thoroughly stirred and, finally, 9 gr. (1 grm.) of potassium iodide dissolved in a little water should be added.[2] This bath should be used at a temperature between 120° and 140° F.

It is, therefore, necessary that the gelatine prints shall have been hardened before toning in a fixing bath containing alum, or, at any rate, by immersion in a cold saturated solution of alum.

When the prints are taken from the toning bath they must not be washed until they have become quite cold. They are left for a few minutes in any empty dish to cool. Neglect of this point is a frequent cause of blisters. During cooling the prints may be sponged with a tuft of cotton wool moistened with tepid water, so as to remove the deposit of sulphur formed on their surfaces. This is prominent after drying, but it is then very difficult to remove.

591. Cold Sulphiding with Acidified Hypo. A well-fixed print, after rapid rinsing, may be toned by immersing in a plain solution of hyposulphite of soda—about 20 per cent—and transferring from that directly to a very weak solution of hydrochloric acid—about 1 per cent. The print must remain in this bath for at least half an hour; if not, there is a risk that the final colour will not be the same throughout. The final colour is only obtained after washing for about an hour and a half (Lumière and Seyewetz, 1913).

[1] If the toning bath is being made up in quantity larger than the capacity of the vessel for heating it to boiling point, the alum may be dissolved in about a quarter of the total volume of water, and the boiling solution of alum added to the solution of hypo.

[2] It has also been proposed to add to this mixture a small quantity of chloride of gold.

592. Single-solution Sulphiding with Polysulphides. It has been proposed to tone silver development prints in a single solution, using for this purpose various mixtures containing as essential constituents monosulphide of soda and an oxidizer—persulphate, hydrogen peroxide, ferricyanide, etc. The active element in this toning is a polysulphide formed in the solution. J. Desalme has shown that the same result can be obtained more economically by using a weak solution of polysulphide, prepared from a concentrated stock solution which is perfectly stable and may be diluted according to requirements for use.

In a glass flask or earthenware saucepan, 1 oz. of sodium monosulphide is dissolved in about 1 oz. of water. It is raised to boiling point and 45 gr. of sulphur then added, little by little (sulphur in stick, previously powdered). When the sulphur is dissolved, sufficient water is added to make 5 oz. The orange-yellow solution thus obtained is a mixture of bisulphide and trisulphide; for use it should be diluted with 4–10 times its volume of water.

A print immersed in this solution tones slowly, particularly if the bath is very cold. The time required varies with different papers, but the prints can generally be taken out of the solution and put to wash in about 30 minutes. Toning continues during washing, and also during drying, if it has not been completed in the water.

A solution of *liver of sulphur*[1] or Barêges salt, containing about 10 per cent of liver of sulphur, may be substituted. The presence of hyposulphite confers the advantage of avoiding stains on the whites of prints which have not been perfectly fixed (Lumière and Seyewetz, 1924).

593. Gold Toning. The methods of gold toning with sulphocyanide, or with thio-urea, previously described (§§ 536 and 537) for print-out papers, are equally applicable to development papers. They yield bluish tones, chiefly of value for transparencies[2] and very useful for improving warm-toned transparencies of unpleasant colour.

[1] Liver of sulphur occurs in yellowish lumps, containing in addition to the pentasulphide of potassium, K_2S_5, various other polysulphides, hyposulphite, carbonate, and sulphate of potassium. On keeping, it swells, becomes greenish, and splits, and then contains only a very small quantity of active sulphide. It is very soluble in water, forming a reddish-yellow solution. A solution of a strength of at least 20 per cent is very stable, but weak solutions do not keep at all well.

[2] Prints on paper do not give pleasing bluish tones by this method unless the print has been developed to a warm colour, in a dilute solution, with considerable over-exposure, particularly with chloro-bromide paper (A. Steigmann, 1926).

The same toning baths, used with prints which have already been toned by the sulphide processes, produce red tones ranging from red-chalk to carmine (A. H. Dunning, 1907). The image then consists of sulphide of silver and sulphide of gold. There is no reduction in the quantity of sulphide of silver present in the image before the gold toning. Red chalk, the tone most desired in this toning process, is obtained most easily, as a rule, with prints which have been over-exposed and developed in a diiute solution, and are yellowish when sulphide-toned (J. Hertzberg, 1923). The process is especially suitable for portrait studies against a white background.

594. Toning with Selenium. The selenosulphate toning bath previously given for print-out papers (§ 539) can be used equally for developed prints on papers with emulsions of very fine grain—gaslight and chloro-bromide. With them it gives a beautiful sepia-brown tone.[1] Although this bath deposits selenium on the image produced on bromide paper, no change in the original black colour of the print results.[2]

The same sepia-brown tone can be obtained more quickly in a solution of sulphoselenide of sodium,[3] obtained by dissolving 2 oz. (100 grm.) of sodium sulphide in a very little water and adding to it 90 gr. (10 grm.) of powdered selenium. The solution is then made up to 20 oz. (1,000 c.c.), and can be used at any time for toning. A slight reddish stain frequently occurs on the whites of the print, but can be removed, after rinsing in water, in a 10 per cent solution of bisulphite of soda.

The same solution of sulphoselenide can be used for toning prints previously bleached (§ 588). In that case it should be diluted with about three times its volume of water, or with a 1 per cent solution of monosulphide of sodium. In this form, selenium toning can be used for bromide prints.

[1] This method of toning is applicable to prints already toned by the sulphide process. It then yields red tones (E. R. Bullock, 1917).

[2] The fact that selenium is, however, deposited on the silver will be noticed if the latter is removed by Farmer's reducer, the residual image being formed exclusively of selenium ranging from red to orange according to the state of dispersion of the silver in the initial image (P. Rehländer, 1932).

[3] Sulphoselenide of sodium NaSeS is a substance of properties similar to disulphide of sodium NaS_2.

595. General Considerations on Toning by the Formation of Coloured Ferrocyanides. The formation of coloured ferrocyanide was suggested as a method of intensification (H. Selle, 1866), and, later, as a toning process. It has been the subject of numerous investigations (R. Namias, 1894; L. P. Clerc, 1899, etc.).

The ferrocyanides of some metals are insoluble compounds of very bright colour, and thus this method affords very varied effects.

The coloured ferrocyanide, of which it is desired to form the image, can in every case be obtained by first converting the silver of the original image into ferrocyanide of silver by immersion in a solution of ferricyanide of potassium, according to the reaction previously described in reduction (§ 459) and in sulphide toning (§ 588). This intermediate compound is then treated with a salt of the metal of which the ferrocyanide is desired (*two-solution toning*).

When the ferricyanide of the metal of which the ferrocyanide is required is soluble in water, or in a solution of which the constituents have not, in themselves, any action on the silver of the original image nor on the ferrocyanide desired, the operation can be carried out in a single bath. As the silver is converted into ferrocyanide, the used ferricyanide passes to the state of ferrocyanide of the same metal, which is deposited on the image at the point where it is formed. The ferricyanides necessary for these reactions are not commercial articles; it is therefore necessary to use equivalent mixtures of ferricyanide of potassium and a salt of the desired metal.

Ferrocyanide	Colour	Solvent to be used for dissolving the ferricyanide
Cobalt[1]	Greenish blue to purplish red	Solution of neutral potassium citrate
Copper	Purplish red	Solution of neutral potassium citrate
Iron (ferric salts)	Prussian blue	Water
Lead	White[3]	,,
Molybdenum	Dead-leaf brown	,,
Nickel	Reddish brown	Solution of neutral potassium citrate
Uranium[2]	Reddish brown to fiery red	Water
Vanadium	Light orange yellow	,,

[1] The images are greenish blue when using the method specified in § 601 (use of a chloride), and reddish when using the method indicated in § 599 (use of a sulphate).

[2] As the colours given respectively by iron toning and uranium toning are complementary, these methods have been applied to the production of the elementary images in two-colour synthesis.

[3] The white ferrocyanide of lead is mentioned here on account of the facility with which this salt is converted into chromate of lead (chrome yellow) by immersion in a solution of any chromate or bichromate (potassium, ammonium, etc.). For toning in two baths, it has been frequently recommended to form first the ferrocyanide of lead in such a manner as to produce in the image a greater quantity of ferrocyanide in a convertible form, and so to obtain denser images.

The foregoing table gives the colours of a number of insoluble ferrocyanides, and also states whether the corresponding ferricyanide is soluble in water and, if not, the substance which is best used for making a solution.

It will be understood that, after toning in a single bath, the image contains, in addition to the coloured ferrocyanide which it was intended to form, also ferrocyanide of silver. If this were left in the image it would give rise to a superficial metallic lustre, due to sulphuration by atmospheric impurities. Consequently, it is usual to dissolve out this salt when toning is finished.[1] This increases the transparency of the image considerably, and is, consequently, specially useful when images are to be viewed by transmitted light. But the ferrocyanide of silver can also be utilized to form in the image an additional quantity of a coloured ferrocyanide, identical with that already formed, or different, according to the method of toning in two baths, and thus intensifying the image or modifying its colour. Further, in order to obtain blended colours, the ferrocyanide of silver may be reduced to the metallic state by development in daylight, or it may be converted into sulphide of silver. As the metallic ferrocyanides are mostly decomposed in alkaline baths, all these conversions should be effected in acid solutions.

The conversion of ferrocyanide of silver into another insoluble ferrocyanide is most frequently done in a solution of the chloride of the metal of which it is desired to obtain the ferrocyanide,[2]

[1] It has been proposed to add sulphocyanide of ammonia to the toning baths. This is a weak solvent of ferrocyanide of silver; but the effect is always incomplete. This addition is only possible with certain metals.

In the case of cinematograph films, protected from atmospheric impurities by being tightly rolled on a spool, the ferrocyanide (or chloride) of silver is frequently left in the film, particularly when toning has not been carried as far as it will go.

[2] The conversion is frequently more rapid or more complete in the presence of a bromide. When toning in a single bath is carried out with a solution containing a chloride or a bromide, and this addition does not produce a salt capable of chloriding or bromiding direct the metallic silver without the intervention of the ferricyanide (which is the case, for example, in blue toning with iron, or red toning with copper), the conversion of the ferrocyanide of silver into a coloured ferrocyanide is effected as it forms, the coloured image being then appreciably denser.

or, failing the chloride, in a solution of another salt to which hydrochloric acid has been added. After the toning is completed the image contains chloride of silver liable, in time, either to become converted into metallic silver, or to be darkened by exposure to light, and in either case increasing the opacity of the image considerably. It is therefore necessary to remove this salt, unless it is desired to obtain particular effects from its darkening by exposure, from its reduction to the metallic state, or from its sulphuration.

When forming the same coloured ferrocyanide by toning in one bath or in two, the quantity of this ferrocyanide formed from the same original quantity of silver is appreciably greater by toning in a single solution than when two successive solutions are employed, a denser coloured image being obtained.[1]

596. Reducing agents, notably hyposulphites remaining from fixing or imperfect washing, which may exist in the gelatine, in the paper or in its preliminary coating, can produce, as would metallic silver, a reduction of the ferricyanide and a deposit of coloured ferrocyanide in the form of a veil or stains. It is therefore frequently recommended to immerse the prints which are to be toned in an oxidizing bath for a short time—nitric acid, peroxide of hydrogen, percarbonate or perborate of sodium, in very weak solutions.

The gelatine (and also the coating of the paper) during the course of the operations, particularly when these are carried out in very acid solutions, may retain yellow hydroferricyanic acid, which cannot be removed by washing in plain water, and produces a uniform discoloration, especially noticeable in prints on paper (Lüppo-Cramer, 1912). This can be removed, after the operations are completed, by immersion in a moderately concentrated solution of sulphate of soda, from 2 to 10 per cent, preferably containing, in addition, a small quantity of sodium or potassium citrate, about $\frac{1}{2}$ per cent. This clearing bath may be used several times in succession.

In the case of toning in a single bath, the same reaction which is produced on the silver of the image can also be produced on any other metal brought into contact with the solution. For that reason the use of metal dishes must be avoided, as well as metal forceps, frames, etc., or any appliances with metal parts, which would rapidly exhaust the solution.

The solutions used for toning in a single bath are sensitive to light. This applies specially to the iron toning bath, which is identical with the sensitizer for ferro-prussiate papers (§ 622). The solutions should be prepared, kept, and used, shielded from a bright light which would induce the formation of a coloured ferrocyanide liable to be deposited uniformly on the image. It is also necessary to avoid the presence of all reducing agents in the bath. In particular, the crystals of ferricyanide should be quickly rinsed before being dissolved, in order to remove the ochreous coating. As a precaution, a small quantity of an oxidizing agent is frequently added to the solution, e.g. potassium bichromate or ammonium persulphate.

When toning with a single bath, the gelatine not only retains a little ferricyanide, but also a little of the other essential constituent of the solution—iron salt, uranium salt, etc. The solution used for toning induces a strong tanning action on the gelatine. This tanning effect, and the concurrent combination of the salts with the gelatine, are very much less in baths which contain a relatively large proportion of citrate, but the presence of citrate tends in certain cases to render the toning solution inert, especially in uranium toning, unless a bath containing a large proportion of hydrochloric acid is employed. The combination of the salts with the gelatine is restricted by adding to the bath a salt which has a greater affinity for gelatine, e.g. alum (E. Sedlaczek, 1920). The same clearing bath previously given will effect the removal of any residual yellow stain.

There is sometimes a risk that the coloured ferrocyanide may be formed on the exterior of the film on account of the diffusion of the

[1] Consider, for example, the case of toning with copper. When toning in a single bath, the reaction is—

$$\underset{\text{Ferricyanide of copper}}{2Fe_2(CN)_{12}Cu_3} + \underset{\text{Silver}}{4Ag} = \underset{\text{Ferrocyanide of copper}}{3Fe(CN)_6Cu_2} + \underset{\text{Ferrocyanide of silver}}{Fe(CN)_6Ag_4}$$

while the reactions occurring by toning in two successive solutions are—

$$\underset{\text{Ferricyanide of potassium}}{2Fe_2(CN)_{12}K_6} + \underset{\text{Silver}}{4Ag} = \underset{\text{Ferrocyanide of potassium}}{3Fe(CN)_6K_4} + \underset{\text{Ferrocyanide of silver}}{Fe(CN)_6Ag_4}$$

$$\underset{\text{Ferrocyanide of silver}}{Fe(CN)_6Ag_4} + \underset{\text{Cupric chloride}}{2CuCl_2} = \underset{\text{Ferrocyanide of copper}}{Fe(CN)_6Cu_2} + \underset{\text{Chloride of silver}}{4AgCl}$$

In principle, the same quantity of silver would produce by the first method three times more ferrocyanide of copper than by the second; or four times if one applies a bath of cupric chloride to the image already toned in a single bath. All the precipitated ferrocyanides, even in the presence of the other constituent, contain an excess of potassium ferrocyanide absorbed or combined in the state of a compound such as $Fe(CN)_6Ag_3K$, $[Fe(CN)_6]_2\,Cu_3K_2$, etc.

soluble intermediate ferrocyanide (ferrocyanide of potassium). This occurs most where the image is densest, and where, consequently, the ferrocyanide can form a more concentrated solution. This result may be avoided by regulating the proportion of the constituents of the toning bath in such a manner that the metallic salt, of which it is desired to form the ferrocyanide, is always in considerable excess relatively to the ferricyanide. This precaution is the more necessary as, in addition to the insoluble ferrocyanide, certain metals—uranium, molybdenum—yield a relatively soluble ferrocyanide when formed from an excess of potassium ferrocyanide. In addition, in direct toning, agitation of the bath should be avoided as much as possible.

In addition to the full colour resulting from toning carried as far as it will go, it is practicable, by incomplete toning, to obtain tones intermediate between the colour of the ferrocyanide and the black of the initial image. These intermediate tones are frequently far more pleasing than the final colours, which may be too bright. It is easier to obtain these intermediate colours when toning in a single solution, as the image retains almost the same tone that it possesses when the toning action is stopped.

597. Reddish-brown Toning with Uranium, in Single Solution. Toning with uranium intensifies the image in proportion as it is carried to finality. A print of normal strength may be toned to a warm black, but toning to red-brown or bright red requires a print of considerably less than average depth.

It is preferable to prepare the toning bath, at the time of use, from 10 per cent stock solutions. Old baths can, however, be used, but they must be filtered if they have become cloudy, and a little more acid added if toning is slow.

Of the two formulae for toning baths given, No. 1 tends to produce redder tones than No. 2.

	No. 1	No. 2
Uranium nitrate, 10% solution	½ oz. (25 c.c.)	½ oz. (25 c.c.)
Neutral potassium oxalate 10% solution	½ oz. (25 c.c.)	—
Neutral potassium citrate, 10% solution[1]	—	½ oz. (25 c.c.)
Potass. ferricyanide, 10% solution	1½ dr. (10 c.c.)	1½ dr. (10 c.c.)
Ammonia alum, 10% solution	1 oz. (50 c.c.)	—
Hydrochloric acid, 10% solution	50 min. (5 c.c.)	1 oz. (50 c.c.)
Water, to make	20 oz. (1,000 c.c.)	20 oz. (1,000 c.c.)

[1] Neutral citrate of potassium $K_3C_6H_5O_7$, $\cdot 2H_2O$, is in small crystals, free from colour, and very soluble in water. It can be replaced by practically the same weight of neutral citrate of sodium. In all solutions of citrates a mouldy growth appears in course of time. This may be prevented by the addition of an antiseptic to the solution, e.g. a small quantity of phenol, or by keeping a fragment of camphor floating on the solution. With many insoluble salts, citrates form complex soluble salts.

The solutions should be pale yellow and perfectly clear.

Toning is very slow at first, becoming more rapid as the operation progresses. According to the tone desired, toning may require from 2 to 10 minutes. Twenty ounces of bath will tone about 2½ sq. ft. (about 40 sq. decimetres per 1,000 c.c.)

When the image is toned to the desired extent it must be washed. But ferrocyanide of uranium is exceedingly susceptible to the action of alkalis, even the weakest, and it would be decomposed (and the colour discharged from the image) by the bicarbonate of lime usually present in ordinary tap water, if washing were continued for more than five minutes. This reducing action may be avoided by adding a very little acid to the wash water, e.g. 1 part of hydrochloric or acetic acid to 1,000 parts of water. In practice, about 1½ drachms of 10 per cent solution of the acid is added to 20 oz. of water; or 45 gr. of boric acid in 20 oz. of water may be used. A very brief rinsing in plain water completes the washing.

The uniform yellow tint of the base which generally remains after this method of toning, is not displeasing in the case of transparencies, but with paper prints the effect is distinctly disagreeable. It can be removed by immersing the print in the following clearing bath—

Soda sulphate	½ oz. (25 grm.)
Neutral potassium citrate, 10% solution	1 oz. (50 c.c.)
Water, to make	20 oz. (1,000 c.c.)

until the whites are clear, after which the prints are rapidly rinsed.

If necessary, any residual salts of silver should be dissolved out in an acid fixing bath, either freshly prepared or kept exclusively for this process. The following fixing solution may be employed—

Hypo.	1 oz. (50 grm.)
Acetate of soda	90 gr. (10 grm.)
Acetic acid, 10% solution	1½ dr. (10 c.c.)
Water, to make	20 oz. (1,000 c.c.)

After clearing the image, the prints must be washed. The first washing waters should contain about 1 per cent of boric acid. For the last, 10 minims of acetic or hydrochloric acid should be added to 20 oz. of water or 1½ drachms of 10 per cent solution.

598. Blue Toning with Iron, in Single Solution. Toning with iron intensifies the image in proportion to the degree to which the toning action is taken, particularly if the residual silver salts are not eliminated.

The following toning bath may be used (Kodak Co., 1922)—

Iron-ammonia alum, 10% solution	2½ dr.	(15 c.c.)
Ammonium persulphate, 10% solution	50 min.	(5 c.c.)
Oxalic acid, 5 % solution	9½ dr.	(60 c.c.)
Potassium ferricyanide, 10% solution	1½ dr.	(10 c.c.)
Ammonia-alum, 10% solution	1 oz.	(50 c.c.)
Hydrochloric acid, 10% solution	50 min.	(5 c.c.)
Water, to make	20 oz.	(1,000 c.c.)

The solution should be light yellow, and remains clear for a long time.

Toning will take from 2 to 10 minutes, according to whether the tone desired is a dull green or a pure blue. 20 oz. of bath should tone about 4 sq. ft. of image, more acid being occasionally added if toning becomes too slow.

Ferric ferrocyanide is exceedingly susceptible to the action of weak alkalis. Long washing in ordinary water must therefore be avoided, and the precautions previously advised in regard to prints toned with uranium, viz., washing, clearing the whites, and dissolving the residual silver salts apply equally to iron toning.

599. Purplish-red Toning with Copper in Single Solution. Copper toning does not intensify the image; it even has a tendency to reduce slightly in the case of toning taken to finality and followed by removal of the residual silver salts.

For preparing the toning bath, the ferricyanide of copper may be dissolved either in ammonia or ammonium carbonate, but the clearest colours and the purest whites are obtained by using a solution of neutral potassium citrate as a solvent (W. B. Ferguson, 1900).

Neutral potassium citrate	350 gr.	(40 grm.)
Copper sulphate, 10% solution	5½ dr.	(35 c.c.)
Potassium ferricyanide, 10% solution	4¾ dr.	(30 c.c.)
Water, to make	20 oz.	(1,000 c.c.)

The solution should be light green and perfectly clear.

Toning should require from 2 to 10 minutes approximately, according to whether the tone desired is a warm black or a purplish-red. 20 oz. of bath should tone about 2½ sq. ft. of image.

Ferrocyanide of copper is not affected by alkaline solutions; consequently the precautions specified in the preceding cases for preventing the reduction of the image by the bicarbonate of lime in ordinary water are not necessary.

If the image is slightly weak it may be strengthened, after a brief rinse, in a solution of about 5 per cent of sulphate of copper, to which has been added a little hydrochloric acid. This is followed by a second rinse.

The removal of the residual silver salts may be done in a neutral solution of hyposulphite, about 5 per cent; but there is no disadvantage in using an acid solution.

600. Mixed Toning. Among the very numerous combinations possible in toning with ferrocyanides, the following may be particularly noted. A print, toned with uranium or copper in a single bath, may be immersed in a weak solution of ferric chloride (perchloride of iron) to which a little hydrochloric acid has been added. This must be before the treatment with hyposulphite. This gives dark green or purplish tones.

A mixture may also be made of the iron and uranium toning solutions for obtaining, with a single bath, sepia, dull green or bluish-green tones, while a full green may be obtained in a single bath by a mixture of vanadium and iron.

More transparent images may be obtained, and at less cost, by dyeing with a mordant, of which particulars are given later.

601. Two-solution Ferrocyanide Toning. This method of working is used principally in toning with iron, which is here given as an example.

The print is first immersed in a solution of potassium ferricyanide, of about 2 per cent strength, which must be previously rendered alkaline by adding a little ammonia. This is allowed to act until the image is yellowish through its entire thickness.[1]

After washing until the whites are thoroughly

[1] A variation suggested by C. H. Bothamley (1918) obviates the employment of the ferricyanide, and consequently the combination of this salt with the gelatine. The image is first converted into chloride, e.g. by immersion in a hydrochloric solution of chromate or permanganate, and then converted into ferrocyanide of silver by immersion in a solution of potassium ferrocyanide.

clear, using the clearing bath already given (§ 597) if necessary, the image is toned blue by immersion in a weak solution of ferric chloride—

Iron perchloride (standard solution 45° Baumé) . .	1 oz. (50 c.c.)
Hydrochloric acid . . .	1½ dr. (10 c.c.)
Water, to make . . .	20 oz. (1,000 c.c.)

After a quick rinse the print is immersed in an acid fixing bath, then well washed in slightly acidulated water.

602. Dye-toning: General Considerations. It was observed by A. Traube in 1906 that, after suitable conversion of the silver in a photographic image into silver iodide, this salt can fix *basic dyes*[1] in a manner that may be compared to the fixation of colouring matters by means of mordants in dyeing. After remaining a sufficient time in a weak solution of one of these dyes, a very intensely coloured image is obtained. The washing after immersion in the dye removes the colouring matter which has penetrated the gelatine without having the slightest affinity for it, but it cannot remove dye fixed on the iodide of silver.[1] The images thus obtained (diachromes) are, unfortunately, very opaque, and the iodide of silver can only be removed after a complementary mordanting, otherwise the colouring matter, being no longer fixed, would be diffused.

The use of various metallic ferrocyanides as mordants, suggested by R. Namias (1909–1911), has become a practical success through the publication by J. I. Crabtree (1917) of working details for dyeing images previously toned by the formation of ferrocyanide of copper. It has since been found that ferrocyanide of uranium constitutes an excellent mordant, as does also cuprous sulphocyanide (J. H. Christensen, 1917). The substance obtained by bleaching a silver image in a mixture of potassium ferricyanide and chromic acid may also be used (F. E. Ives, 1919).

According to whether the conversion of the original silver image into a mordant is superficial or complete, the colours produced by the dyeing will be broken or pure.

For certain purposes, and notably for photography and cinematography in colours by the superimposition of two or three images in primary monochrome elements, it is essential that the image should be very pure and highly transparent. It is important, therefore, to start with very feeble images and to convert the whole image into a mordant which itself is without any appreciable colour.

The stability in daylight of images toned in this manner is very inferior to that of images toned by the formation of metallic salts. These processes answer well for cinematograph films and stereoscopic or lantern transparencies. But they are scarcely suitable for window transparencies exposed to a strong light for any length of time.

The use of these methods of toning has for a long time been restricted to transparencies, but a working method has been introduced by A. and L. Lumière and A. Seyewetz (1925) for paper prints.

603. Mordanting the Images. Unless very pure blues or greens are desired, mordanting may be done in either of the baths previously given for uranium toning (§ 597), or copper toning (§ 599). An essential condition, however, is that the ferrocyanide of silver must not be removed by treatment with hyposulphite. This

[1] The majority of artificial colouring matters known as aniline dyes can be divided into two categories, basic dyes and acid dyes.

A basic dye is a salt in which a base, bearing by itself the colouring power, but generally insoluble in water, is combined with a mineral or an organic acid—chloride, sulphate, acetate, oxalate, etc. All basic dyes are very soluble in alcohol: they have a marked affinity for collodion, but they will not combine with gelatine.

An acid dye is a salt of which the acid radicle forms the essential colouring constituent, this acid dye being combined with a mineral base—salts of sodium, potassium, ammonium, and calcium. Acid dyes are, as a rule, insoluble in alcohol.

If solutions of basic dyes are mixed with those of acid dyes, an insoluble precipitate generally forms. On the other hand, dyes of the same character can always be mixed with each other for obtaining intermediate tints.

When a piece of blotting paper has its lower extremity dipped in a weak solution of a dye, the water rises on the blotting paper more rapidly than the colouring substance when this latter is basic, the coloured stain being thus preceded by a moist zone free from colour as the moisture rises. This phenomenon does not occur with acid dyes, and it forms a simple test for distinguishing between the two categories. Dyes intended for ordinary dyeing are mixed, as a rule, with inert soluble substances for the purpose of maintaining the colouring properties constant from batch to batch. The complete designation of a dye ought to include all letters or numbers following the name of the colouring substance, and the name of the maker. Dye substances of the same name but coming from different sources are not necessarily identical.

[1] Mordanting by the formation of iodide of silver and cuprous iodide may be effected by means of the solution given in § 455 for very great intensification.

would diminish considerably the capacity of the image for retaining the dyes. Broken colours, generally the most pleasing, are given by incomplete mordanting, toning being stopped when the image presents an almost imperceptible brown tint, which, with a new bath, will not require more than 2 minutes. The image must be washed between mordanting and dyeing until the whites are perfectly free from colour.

In the case of mordanting with uranium, the washing water must be acid. But any removal of the silver ferrocyanide must be avoided, as this plays as active a part as the mordant.

The following mordanting bath renders it practicable to obtain at will either broken colours by shortened treatment, or full colours, by taking the operation to the full.[1] The mordanted image is colourless.

Potassium ferricyanide .	45 gr. (5 grm.)
Ammonium bichromate, 10% solution . . .	2½ dr. (15 c.c.)
Sulphuric acid, 10% solution	4¾ dr. (30 c.c.)
Water, to make . . .	20 oz. (1,000 c.c.)

This solution may be used repeatedly. Mordanting must be followed by washing, which, however, must not be too prolonged, as this is liable to reduce the mordanting effect.

Finally, excellent results may also be obtained, for all ordinary work, by using the following bath for mordanting (formula modified by R. Namias, 1928). Small quantities only should be prepared—

Copper sulphate . . .	175 gr. (20 grm.)
Neutral potassium citrate .	525 gr. (60 grm.)
Acetic acid, glacial . .	2½ dr. (15 c.c.)
Ammonia sulphocyanide, 10% solution[1] . . .	2 oz. (100 c.c.)
Water, to make . . .	20 oz. (1,000 c.c.)

The mordant produced by this solution is colourless, and is very suitable for obtaining easily clear colours in all shades, if immersion in the solution is continued until the image is completely bleached. In addition, its efficiency is such that an extremely weak silver image will show, after dyeing, a very appreciable density, very little of which is due to the mordant. After mordanting, the image must be washed until the clear portions are perfectly free from colour.[2]

604. Dyeing of Mordanted Transparencies. Dyeing is effected in an aqueous solution of the dye, to 20 oz. of which has been added from ½ to 2½ drams of glacial acetic acid.[3] The concentration of the dye may vary from ½ to 18 gr. per 20 oz. of solution. A few trials will indicate the best concentration. Very dilute baths should be avoided for dyeing images mordanted in a mixture of ferricyanide and bichromate, and very concentrated solutions should equally be avoided for dyes whose colouring power is considerable, e.g. methyl violets and Paris violets, and also in the case of dyes, like safranine, which are not readily washed out.

[1] For three-colour work it is necessary that the image should be very transparent, and in that case the silver salt must be removed, after dyeing and washing, in the following bath. This solution must be prepared at the time of using. The object of the sulphate of copper is to fix the dye in the gelatine. A bath containing tannin could also be used for this purpose.

Hypo.	700 gr. (80 grm.)
Sodium acetate . . .	175 gr. (20 grm.)
Copper sulphate . . .	265 gr. (30 grm.)
Acetic acid, glacial . .	1½ dr. (10 c.c.)
Water, to make . . .	20 oz. (1,000 c.c.)

Sufficient transparency is obtained in transparencies by coating them, after drying, with celluloid varnish.

Failures sometimes occur through impurities in the waters used for preparing the mordanting bath. If that should be the case, distilled water should be used, or, at any rate, water which has been boiled.

[1] This solution must be added little by little, after the other constituents are dissolved, the solution being shaken after each addition. When only required occasionally, the sulphocyanide should only be added at the time of use. A solution which is at all turbid should be thrown away, as there is a serious risk of veiling the dyed image throughout. For commercial work the glacial acetic acid may be replaced by an equivalent quantity of crude acid (pyroligneous acid) about 6 dr. per 20 oz. The citrate and the acetic acid do not become exhausted; the bath may be strengthened several times, as required, by moderate additions of sulphocyanide and the copper salt.

[2] Double tone effects can be got by dyeing, in one of the following baths, an image which has been toned to a blue in the bath recommended in § 598, but with the ammonia alum omitted. The shadows only are then toned to a blue: the light half-tones are bleached and they alone can fix the dye (Kodak Co., 1922).

[3] The object of the acid is to prevent the dye from fixing on the plain gelatine. The quantity of this acid may be increased if the whites show any appreciable discoloration.

The following table gives various dyes with their corresponding colour and the group to which they belong. They are all well suited for dyeing with the mordants previously given—

Warm brown	Chrysoidines	Azo
Reds	Rhodamine B.**	
,,	Rhodamine S.**	Phthalein
,,	Safranines	Azine
,,	Fuschine*	Triphenylmethane derivative
Orange	Acridine orange	Acridine
Yellows	Auramine**	Diphenylmethane derivative
,,	Phosphine	Acridine
,,	Thioflavine**	Thiobenzenylic
Green	Malachite green*	Triphenylmethane derivative
Blue-green	Methylene green	Thiazine
Blue	Methylene blue	Thiazine
,,	Victoria blue	Triphenylmethane derivative
,,	Capri Blue**	
Violet	Methyl violets	Triphenylmethane derivative

* Dyes suitable for anaglyphs and two-colour photography.
** Dyes suitable for three-colour synthesis.

All the intermediate colours can be obtained by mixing these various solutions in suitable proportions, or by successive immersion in different baths with intermediate rinsing.

According to the intensity of colour desired, and also according to the strength of the dyeing bath, immersion in the solution may vary from 2 to about 15 minutes.

After dyeing to the colour desired, the image is washed in several changes of water for about 10 minutes. An image which has been coloured too deeply may be reduced in intensity by brief immersion in water to which a few drops of ammonia—about 20 minims per 20 oz.—has been added. An image which has been insufficiently dyed can be re-immersed in the mordanting bath after a brief rinsing.

605. Dyeing Mordanted Prints on Paper. After mordanting by the formation of cuprous sulphocyanide in the bath of which the formula is given at the end of § 603, the prints made with extra wide margins should be washed for about 30 minutes in running water, or water frequently renewed. A print is placed with its back in contact with a sheet of glass a little larger than the print, or on the flat bottom of a dish, and surface-dried with a blotting board.

The dye is applied to the print by means of a large flat brush—cod-tail—or a plug of cotton wool, using always an ample excess of dye, which may be spread without any special precautions other than avoiding all contact of the dye with the back of the print.[1] By using solutions of sufficient strength the dyeing is completed in about 2 minutes.

The dye solutions to be used in this case are 1 per cent solutions of any one of the following dyes, with addition of 1 per cent glacial acetic acid—

Thioflavine T : Methylene Blue : Rhodamine S : Malachite Green : Methyl Violet :

or a mixture of these solutions in suitable proportions.

The excess of dye should be drained off at one corner, and the print washed in running water until the slight tinting of the base does not get any lighter. This will require from 30 minutes to an hour. On drying, this tinting decreases but does not completely disappear.[2]

For completely discharging this colour, the prints should be immersed in a *very dilute* solution of sodium hypochlorite (1 to 2 parts by volume of concentrated Javel extract to 1,000 of water) (R. Namias, 1936).

The prints should remain in the bath for about 30 to 60 seconds; when the whites are free from colour they should be placed in a very weak solution of bisulphite of soda, 1 oz. of the commercial solution per 20 oz. They should then be rinsed and dried.

In the case of emulsions very strongly hardened to allow of drying by heat, any chemical treatment is generally unnecessary for bleaching if the washing is carried out in water at 120° F. The very slight tint remaining on the base does not show on the face of the print after drying (C. Rosetti, 1936).

606. Tinting. While toning affects the colour of the image only, the base remaining colourless, a general tinting is intended to colour the base itself, the image appearing in black, or in a colour, if it has been previously toned, on a tinted ground.

General tinting is done by means of acid dyes,

[1] The back of the print may be protected from the dye by attaching it to a glass coated with india-rubber solution (§ 444), and covering the margins of the print with strips of paper coated with the same india-rubber solution. Dyeing may then be proceeded with in a dish, but more dilute solutions should be used. After finishing and drying, the print is detached by being pulled from the glass; any india-rubber which may adhere is removed by rolling under the fingers.

[2] It is often possible to dispense with the protection of the back of the print by using a bath sufficiently dilute for the dyeing of the image to require about 24 hours.

generally those prepared for woollen fabrics, the fixation of which is facilitated by the addition of a little acetic acid—about 50 minims of a 10 per cent solution of the acid in 20 oz. of bath. In order to avoid the softening of the gelatine by the dyes, they should be employed in very dilute solutions. It is very exceptional that a strong colouring of the base of the image is desired.

It should be borne in mind that this tinting diminishes the luminosity of the prints considerably; the loss is from 20 to 90 per cent; and it also lessens contrast to a marked degree.

The following table gives the dyes recommended and the concentrations desirable for the various usual effects on cinematograph films (Pathé-Cinema, 1926).[1]

The average time of immersion is 3 minutes for transparencies on plates or films. For prints on paper it must be appreciably less, and, in addition, it is desirable to use more dilute solutions. Gelatine that has been hardened too much will only take the dyes irregularly.

Blue (night)	Bleu pur direct 4B	0·5%	Polyazo
Yellow	Tartrazine extra-concentrée	0·5%	Hydrazone
Amber	Coccéine orange	0·2 to 0·7%	Polyazo
Flame red	Ponceau 3 RS	2%	Azo
Green	Vert Sulfo 2B	0·4%	Triphenylmethane derivative
Green (daylight)	Vert naphtol	0·5%	Nitroso (quinone-oxime)
Pink	Amaranthe	0·2%	Azo
Violet	Violet acide 5B extra	0·1%	Triphenylmethane derivative

After tinting, the prints or transparencies should be washed for several minutes to remove the dye which adheres superficially to the gelatine and the support. Long washing, however prolonged, will scarcely reduce a tint which is too strong.

Before drying, the transparencies or prints should have all surface moisture removed. Any dye which may be discharged or remain in drops on the surface will cause streaks or marks.

[1] The dyes mentioned in this table are manufactured by La Société des Matières Colorantes de Saint-Denis.

CHAPTER XXXIX

WASHING, DRYING AND GLAZING OF PAPER PRINTS

607. Methods of Washing Prints. In the case of prints on paper, the part played by washing differs in no way from that which has been studied previously (§ 415) in the case of photographs on impermeable (glass) and practically impermeable (film) supports. The mechanism of washing, however, is slightly different, the interchanges being considerably slower in the interior of the paper (fibres and sizing) than in the gelatine layer. Washing may be controlled by the same methods already indicated in the case of plates and films.[1] For the reasons already given (§ 421) so-called *hypo-eliminators* should never be used in any circumstances.

When a gelatine coating on an impermeable support is being washed, the concentration of the salt solution in the coating is reduced by a constant fraction of its former concentration after each change of water (§ 416), or at the end of equal periods of washing in running water (§ 417), the soluble salt being expelled sufficiently quickly for it to be necessary for the water to be renewed very rapidly. On the other hand, the diffusion of sodium thiosulphate and of soluble silver complex thiosulphate from the paper and its baryta coating is much slower, and is lessened as the quantity remaining to be eliminated becomes smaller. Under such conditions there is no longer any advantage in employing such a rapid renewal of water for papers as in the case of plates and films, the rate of washing being governed by the rate of elimination of salts from the support.[2]

In order to bring about practically complete elimination of removable salts, it is necessary that thin papers should be washed for 30 minutes and very thick papers (cardette, post cards) for 90 minutes, using running water or water which is renewed every five minutes. In the former case it is sufficient to employ moderately fast running water, so long as the prints are moved about fairly frequently to prevent the massing of them together which prevents the penetration and renewal of water. Clean water must have constant access to *both* sides of the prints.

When using running water for washing, it is preferable to make use of an arrangement which keeps the prints moving inside the receptacle. When washing in changes of water, it is essential that the prints be removed *one by one* from the dish of contaminated water and placed in the dish of fresh water. The removal of prints in a mass from one dish to another, or emptying and refilling a dish on the bottom of which the prints are heaped, is absolutely ineffective.

An excellent method of hastening the elimination of salts retained by photographic papers consists in pressing-out the liquid with which they are saturated from time to time (Lumière and Seyewetz, 1902). For example, at each change of water the prints are gathered in a heap on a flat and rigid support, and the water pressed out with the hand, or, better still, by pressure with a roller (a wooden rolling pin or a thick round glass bottle can be used for the purpose). The prints, having been squeezed in this way, are placed in a small quantity of clean water from which they are taken one by one and transferred to the washing tank, which, in the meantime, has been emptied and refilled. When only a very small number of prints have to be washed, they may be pressed between blotting paper rather than treated as above.

[1] It has often been suggested that the efficiency of washing may be controlled by adding a colouring matter to the fixing bath or to the first wash water, such a material being eliminated at almost the same rate as the hypo. There is, however, always a risk, when applying this treatment to a paper on which this experiment has not already been tried, that the colouring matter may be ultimately retained by the paper or by the baryta coating.

[2] K. C. D. Hickman and D. A. Spencer (1925) have shown that this slowness in elimination during washing is a property of paper in the sheet form and not a specific property of its fibres. The diffusion through the cell walls is slower than that in plain water, and the period of time a salt takes to pass through a large number of fibres in series is considerably increased by the resin sizing in the paper, for when the paper is calendered the resin melts, thus rendering the fibres partially impermeable and, at the same time, filling up the interstices. The same experimenters have shown that the treatment recommended by A. Charriou (1923) for hastening the washing of papers is based on a theory which is invalid. The process consists in submitting the prints, during washing, to the action of an inert salt, such as sodium bicarbonate, which would displace the hypo remaining in the paper; such treatment would only be efficacious in the case of an irreversible adsorption, and this does not occur.

608. Apparatus for Washing Prints. Print washers are often less efficacious than plate washers, the prints usually tending to heap themselves up on the bottom of the tank or on the perforated false bottom. The use of floats provided with clips for holding the prints has often been suggested, but the use of such devices is hardly possible except when washing a very small number of prints, and in that case it is just as practicable to carry out the washing in several changes of water, transferring the prints, one by one, from one tank or dish to another.

When it is required to wash a fairly large number of small-sized prints, either a washing machine or a shallow cylindrical tank can be used, the latter being fitted with inlet pipes placed tangentially, so that a whirling movement of the water is produced.[1] A washing machine consists essentially of a perforated metal drum, the axle of which is mounted horizontally on bearings fitted to an overflow tank, in the inside of which it is kept rotating either by an electric motor or by the fall of the supply water on to the paddles of a water-wheel connected with the drum itself. A secondary flow of water is generally directed through the perforations to prevent the prints from sticking to the drum. With such machines there is often a risk of the prints becoming torn or creased if an attempt is made to wash large-sized prints, while prints on stiff supports are often scratched when washed by this method.[2]

When washing large-sized prints, the consumption of water is usually reduced by using a number of tanks arranged in tiers (*cascade washer*), the water flowing from one tank into the tank immediately below (arrangements should be made to prevent the prints being carried over by the current of water). On taking out of the fixing bath, the prints are placed in the lowest tank and are transferred progressively through the various tanks, so that systematic washing is ensured (the prints are moved in the opposite direction to the flow of water).[3]

Before proceeding to dry the prints it is a good plan to remove all foreign matter (pieces of paper, particles of gelatine, dust, etc.) from the surface of the prints by wiping them with a large soft sponge (an ordinary or rubber sponge) which has been well soaked in water and squeezed almost dry. For this purpose, the prints are laid on the flat bottom of a metal dish tilted against the side of the sink; at the same time, the greater part of the superficially adhering water is removed, and the time required for drying is thus shortened.[1]

609. Drying of Paper Prints. The old method of drying paper prints was to hang them, by one or two corners, according to their size, with clips on to lines stretched either between the walls of a well-ventilated room, or fixed to a frame which is fitted to the wall or hung from the ceiling by cords passing over pulleys. When dried by this method, prints on emulsion papers tend to curl up or roll themselves into small tubes, and the process of flattening them out involves an additional manipulation,[2] during which cracks in the coating are sometimes produced. This is usually a very serious matter, and can only be avoided with great difficulty, even when the lower edges of the prints are weighted. It is true that the gelatine forming the support of the image could be kept moist by dipping the prints, before drying, in water containing a little glycerine, but if this remedy is applied the risks of deterioration of the image under the influence of impurities in the air is considerably increased. The method of drying

[1] If a more suitable container is not available, place in the dish a cup to receive the jet of water from the tap in order to avoid fractures in the paper which would occur if the prints were hit directly by the jet.

[2] Attention should be drawn to the continuous washing machines intended for prints made on long lengths of paper, or for separate prints held between two endless belts or aprons of permeable material.

[3] If the same set of tanks is being used to wash the prints from several sets of printers, it is an advantage not to mix the different batches, thus simplifying the sorting of the prints after drying. In this case each batch may be identified, until after drying, by means of a piece of material numbered with indelible ink which accompanies the prints of each batch in the tanks and in the drying apparatus.

[1] This precaution is particularly indispensable in districts where the water supply contains large quantities of lime salts, which, during drying, are liable to form whitish streaks on the surfaces of the prints; if such lime deposits appear in spite of wiping over with a sponge, a small proportion of hydrochloric acid (1 per cent) should be added to the last wash water.

[2] They are usually *flattened* by passing the back of the print under the straight edge of a hard ruler, using a single continuous movement, as any hesitation generally produces a crease in the print. Attention is drawn to the existence of flattening machines in which the prints are inserted between two endless aprons passing at a fairly sharp angle round a return roller of very small diameter.

One can also proceed as follows: Place together two prints of the same size face to face; using a sponge, out of which as much water as possible has been squeezed, the backs of the two prints are dampened and the prints afterwards placed between clean blotting paper; when a certain number have been piled up in this way, they are put under pressure in a copying press for a few minutes.

prints by suspending them freely is therefore usually confined to prints on non-emulsion papers (such as salted papers, ferro-prussiate papers, etc).

610. The usual method of drying papers coated with emulsion is to lay them face downwards on a support which allows of free access of air, such as stretched linen, butter muslin, or galvanized wire netting. If necessary, drying may be hastened by a current of warm air. When the amateur has only a very small number of prints which require to be dried, they should be first pressed between blotting-paper, and then placed face downwards on dry sheets of fluffless blotting paper (blotting cards generally give much longer service and are therefore more economical in use), which, when not in use, are kept protected from dust.

When a large number of prints are to be dried, a drying cupboard is generally employed for the purpose. Such a cupboard is fitted inside with sliding frames covered with cloth or wire netting[1]; if a sufficiently large number of supplementary frames are available, they can be filled with prints outside the drier and placed inside as the frames containing the dry prints are removed. Such a drier is sometimes fitted with a glass door, while the sides of the cupboard may be furnished with ventilation holes at the top and bottom, covered with fine gauze to keep out dust. The temperature of the air inside the cupboard is raised by means of gas jets placed under sheet iron, or by electric resistance heaters; a fan may be used to accelerate the circulation of air inside the cupboard, while the moist air is evacuated by a chimney. A drier which is less bulky when not in use may be made by stretching between two vertical walls (partition walls, furniture, etc.) pieces of cloth, each piece being mounted on an automatic spring blind roller, so that it rolls up when the free end is released.

For the rapid drying of large numbers of prints continuous drying machines are often used; the prints are inserted one by one between two endless aprons or belts of porous fabric[2] which are carried round a cylinder heated from the inside; at the end of the travel the prints emerge dry and fall into a box placed in position for the purpose (C. Jellinek, 1908).

Post cards may be dried by fitting them into wooden grooves, the distance between the bottoms of the grooves being slightly less than the length of the card. The cards are then placed in the grooves so that the coated side is convex, thus counteracting the tendency of the card to curve in the opposite direction.

611. The gelatine of positive paper emulsions is usually sufficiently hardened to be able to resist relatively high temperatures without damage. However, it should be remembered that there are certain papers, particularly glossy papers,[1] which are coated with a relatively soft gelatine, and these cannot be dried face downwards, especially with heat, without having been hardened with alum[2] (§§ 540 and 581).

The operation of hastening the drying by heat often brings about a modification in the tones of prints on print-out paper and on prints which have been developed or toned to warm tones; it nearly always causes a slight alteration in the appearance of the surface, so that when quality is more essential than speed, methods by which the prints are dried in less than half-an-hour should be avoided.

Prints should be removed from the driers before the gelatine becomes over-dried, especially if the drying is hastened by a current of warm air, as the gelatine tends to become brittle and curling of the prints is only prevented with great difficulty. Immediately the prints are dry, but while they are still supple, they should be piled up on top of each other, and can be slightly weighted without any risk of their accidentally adhering to each other. Special care should be taken to place all the prints of the same pile the same way up, i.e. facing in the same direction, otherwise, if the drying has not been quite sufficient, two prints with the gelatine surfaces in contact would stick together.

612. Rapid Drying of Prints. In cases where prints have to be delivered in a great hurry, the rate of drying may be considerably increased if the print is immersed for a few minutes in a bath of methylated spirits (§ 428) after it leaves

[1] Keep the frames with wire netting for drying prints that have not been toned.

[2] The material generally used for the purpose is *swansdown-calico*, one side being smooth, the other fleecy, such material being specially made for covering the cylinders of printing machines. In drying machines in which the prints are successively carried round two cylinders in opposite directions, creases are often produced as the direction of motion is changed, especially in the case of very large prints.

[1] The gelatine of glossy papers is usually only slightly hardened, so that they can be " glazed " if desired.

[2] Prints intended for the Bromoil processes must never be hardened with alum. They may be dried by laying them on a pad of blotting paper and fixing the corners with clips or drawing pins.

the last wash water. When the water has been displaced by the spirit throughout the thickness of the paper, a fact which can usually be verified by the translucent appearance presented by the paper when examined from the back, the prints are squeegeed to expel the alcohol (which is then recovered), and pressed between blotting paper; they are then dried by heat, using the drying apparatus at its maximum temperature.

When only a very few prints have to be dried in the shortest time possible, they may be bathed in alcohol, pressed almost dry between blotting paper, and then singed one by one. For this purpose, the print is held by a lower corner in an almost vertical position, the upper corner being held to a blue gas or spirit flame; the alcohol with which the print is still impregnated burns, the flame gradually creeping down the print. When it arrives about half-way the print is quickly turned round, taking hold of the corner at which the alcohol was originally lighted with the free hand. The flame then spreads upwards until it reaches the corner which was originally held in the hand. When the operation is properly carried out there is no risk of burning either the print or the fingers.

613. Deformation of the Image during Washing and Drying. All papers tend to stretch when wetted and to contract during drying, the final dimensions being usually less than the initial dimensions. In the case of machine-made papers—and photographic papers usually come within this category—the variations in length are not proportional to the variations in breadth. In such papers the fibres actually lie in a direction parallel to the length of the band of paper, so that although the fibres themselves swell when wetted their length remains practically constant.[1]

The expansion which occurs when the paper is wetted, and which varies from one paper to another, and even for the same paper dried to the same extent, may amount to 2·5 per cent of the width of the paper and 0·5 per cent of its length. When dried with free access of air, the contraction, relatively to the initial dimensions, may attain 1 per cent of the width and 0·5 per cent of the length. When the same paper is alternately wetted and dried several times, similar variations occur each time, their magnitude often being slightly greater but soon reaching a limit.

In ordinary photographic practice, these variations in the dimensions of photographs were particularly important at the time when photographs were mounted by the wet process; the prints were fixed in position by the mountant when expanded to their fullest extent, appreciable deformation thus resulting. In that case, one endeavoured to place the subject in relation to the paper in such a way as to minimize the effect of the deformation, for example, by lengthening a very stout sitter, or broadening a person who was rather thin. The use of dry-mounting processes, now becoming more and more general, has allowed the deformation of the image to be sufficiently reduced so as to be no longer a source of difficulty in purely artistic work.

In all cases where measurements have to be made on photographic images paper prints are usually avoided. If, however, great accuracy is not essential, two metrical scales may be printed on the margins of the sheet of paper, parallel to two adjacent sides respectively, and measurements relative to these scales may be taken.

For work requiring precision, paper coated on the back with plain gelatine may be used. Before printing, the paper is expanded by soaking in plain water for some time, and is then laid face upwards on a sheet of plate glass; any air bubbles and excess of water are expelled, and the whole is then left to dry. Owing to the adherence of the gelatine, the paper remains fixed at its maximum distension. When developed and dried, the image will have exactly the same dimensions as the latent image (H. Roussilhe, 1922). The use of sensitive emulsions coated on thin sheets of matt aluminium has also been suggested.

614. Glazing and Enamelling of Prints. The processes of glazing and enamelling, when applied to prints on glossy paper, bring about a considerable increase in contrast and clearness of the details of the image.

The enamelling process, which was formerly applied to prints on albumen or collodion paper is no longer used. A sheet of flawless plate-glass was thoroughly cleaned, dried, and coated with a layer of an approximately 1 per cent solution of collodion. When the collodion had set, a solution of gelatine was run on top, and the print

[1] To determine the direction of the fibres of a paper a small disc is cut out of it and floated on water (in the case of papers coated with an emulsion the plain side of the paper should be in contact with the water). If this is done the paper is seen to curve inwards in the form of a portion of a cylinder; the direction of the fibres, that is, the direction in which the dimensions are practically constant, is that of the generators of the cylinder, i.e. the straight direction.

applied face downwards on the gelatine solution, the excess being removed with a flat squeegee. A sheet of stout paper was applied to the back of the print by the same method, and turned over behind the glass to keep the whole in place. When thoroughly dry, a cut was made with a penknife, and the print could be removed coated with a layer of collodion as highly polished as the plate-glass on which it had been moulded.

Similar results, although not as lasting, are obtained more simply by glazing prints on gelatine-coated papers. The print is applied while wet to a sheet of plate-glass, polished celluloid, or a piece of japanned iron plate (ferrotype plates). If the operations have been correctly carried out, the prints may be detached quite easily when completely dry. The gelatine surface is then as glossy as the support with which it had been in contact, but if damped afterwards at any time it loses its glaze.

An essential condition for the success of the operation is the absolute cleanliness of the support, which must therefore be thoroughly washed in plenty of water whenever seen to be dirty. The cleaned and dried sheets of plate-glass are polished with talc powder, the excess of powder being removed. Ferrotype plates are polished with a flannel on which a few drops of a thin polish have been poured,[1] and then finished off with a dry pad of flannel or chamois leather.

Of late it has become usual to employ a glazing or stripping solution in which prints are soaked for a minute or two immediately before being laid on the glasses. Such a solution consists usually of purified ox-gall. This evil-smelling product can be replaced by its active constituents sold under the name of industrial biliary salts (a mixture of about 75 per cent of glycocholate and 25 per cent of taurocholate of sodium) to be used in aqueous solutions at concentrations of from 0·5 to 1 per cent, or (A. Seyewetz, 1936) by all other substances reducing the surface tension of the water (wetting agents of the textile industry), and especially by solutions of about 1 per cent strength of various sulphonated fatty alcohols (Ocenol, Lorol, Igepon, etc.).

[1] This polish is prepared by pouring about 1 oz. (50 grm.) of paraffin, white wax, or spermaceti (melted by holding it against a hot iron) into 20 oz. (1 litre) of crystallizable benzene or light mineral petroleum. Plate-glass, as well as ferrotype plate, is sometimes polished with a pad of cloth on which a little very dry white soap has been rubbed.

Immediately they are washed,[1] the prints are applied face downwards on the polished surface of the plate-glass or the ferrotype plate, which is placed flat on a table. After covering with a piece of cloth or parchment paper which has been previously wetted, bubbles of air and the excess of water are expelled with a *soft* rubber roller or a squeegee, working from the centre towards the edges. Any excess of moisture is then removed from the back of the print with blotting paper, and the whole allowed to dry by itself. Trays, linen sheets, or sheets of clean paper should be placed so as to receive the prints should they detach themselves spontaneously.

When large size prints are being glazed it happens that the corners, being the first to dry, loosen spontaneously, so that the image has iridescences at the edge of the parts prematurely freed. As glazing plates are placed horizontally each corner can be weighted with a small piece of metal, or the drying of the corners can be retarded by laying on them pieces of wet blotting paper.

In establishments doing developing and printing work for amateurs, the glazing machines resemble drying machines in their arrangements. The prints are placed face upwards on an endless belt which applies them against a chromium-plated cylinder, heated within and kept rotating slowly.

The prints must not be too wet if they are to be glazed by heat, for the water evaporating between the hot metal and the gelatine coating can leave matt spots. The best results are obtained with machines fitted with a device for polishing the cylinder at each revolution, so as to remove traces of gelatine remaining from previously treated prints, and the deposits of lime left by the evaporation of the water.[2]

Prints glazed at an excessive temperature often lose contrast and undergo a change in colour tending towards yellow. The finer the reduced silver the greater these changes are. These phenomena are sometimes accompanied by the beginning of reticulation.

615. Facing the Prints with Cellophane. The picture surface of a photographic print can be protected by causing to adhere to it a trans-

[1] In very hot weather the risk of the prints adhering to the support completely is lessened by first allowing the prints to dry and afterwards wetting them by a short immersion in plain water before glazing.

[2] When the water contains much lime the acid to be used in the last wash water (§ 420) is acetic acid which is almost inert as regards chromium plated surfaces.

parent sheet of cellophane (regenerated cellulose) of the kind used for packing some food products. A sheet of cellophane is distended by immersion in cold water for at least 5 minutes and is then applied to a glazing plate. A print that has not been hardened is applied to it by its gelatine surface. (In the case of a hardened print the gelatine is softened by immersion for about 10 minutes in tepid water, of which the warmth must be in proportion to the degree of hardening). The whole is kept under pressure beneath some sheets of blotting paper until the next morning, when it is lifted by a corner and trimmed (J. L. Sheldon, 1931). Before removing the print from the glazing plate a cloth may be pasted on the back of the paper.

CHAPTER XL

THE PRINCIPAL FAILURES IN MAKING POSITIVE PRINTS ON SILVER PAPERS

616. Preliminary Note. Before enumerating some of the failures which may occur in the various stages of the production of positive prints, the reader should realize that the great majority of failures are entirely due to mistakes made, often unconsciously, by the worker himself (§ 430).

The failures already described in connection with the production of the negative need not be repeated here, but they apply as such when printing on development papers.

It should also be borne in mind that any defects in the negative are necessarily reproduced on the positives made from them, and are even occasionally exaggerated to a certain extent.

617. Failures Common to Various Printing Processes. *The Outlines of the Image are Doubled.* The printing paper has shifted in relation to the negative during printing. This occurs more frequently with print-out paper as a result of insufficient pressure during inspection of the image while printing.

Lack of Sharpness in Parts of the Image. Localized defective contact between the negative and the sensitive material, chiefly caused by warping of the back of the frame or printer, badly-fitted hinges, inequalities in the thickness of the cloth or felt with which the back is covered, or, in the case of transparency plates, by imperfect flatness of the surfaces in contact. The effect of defective contact is exaggerated by printing in diffused light and lessened if a point source of light is used.

General Lack of Sharpness. The negative has been placed in the frame or printer back to front, the positive material being in contact with the support. The picture is then reversed. The thicker the negative, the more marked is this defect; it is lessened if the printing is carried out with a point source of light in a fixed position relative to the negative.

No Image Appears, or only Very Faint after a Long Time. The back of the sensitive paper has been placed in contact with the negative.

Light Spots of Irregular Shape. Light or white marks may be caused by a shadow thrown on the frame during printing, by the presence of foreign bodies (pieces of paper, bits of the cloth or felt of the pressure pad, etc.) between the glass support and the negative, or between the negative and the paper, or by opaque spots (fragments of gelatine, etc.) on the back of the negative.

Cracks in the Paper or Sensitive Coating. The prints have been rinsed or washed under a too violent jet of water, or the wet prints have been handled incorrectly. Large sheets of paper should be lifted by one corner, and the strain taken off by lifting also the opposite corner. A print should never be taken hold of by the middle of one of its sides.

White Spots Appearing During Fixing. Local solution of the silver image by particles of rust suspended in the fixing bath (especially in a used bath) due to iron or cast-iron pipes or to the vessels (iron casks, etc.) used for the storage and handling of hypo.

Blisters. Blisters which occur during the manipulation of paper prints consist of pockets of gas or liquid between the actual paper and the layer of emulsion. The first can be caused by transferring prints on development paper from a developer which is very rich in carbonate to a very acid stop-bath or fixing bath *without intermediate rinsing*. They may also be formed by using water supersaturated with air (very cold water under high pressure), which, on attaining the temperature of the atmosphere, liberates the excess of dissolved air in the form of bubbles in the substance of the paper. Blisters, which consist of pockets of liquid, are usually formed during the washing which immediately follows fixation in a very concentrated bath, especially on papers coated with insufficiently tanned gelatine, the water penetrating into the gelatine faster than the thiosulphate solution can get out. Any factors which tend to weaken the gelatine locally, increase its permeability, or lessen its adherence to the support (contact with warm hands, folds, kinks, and creases in the print), favour the formation of these blisters. This tendency can be reduced by properly tanning the gelatine before or during fixation (the use of alum is effective even for collodion papers, as it hardens the gelatine of the baryta coating), and by avoiding very sudden changes of temperature and concentration in the handling of the prints.

When blisters have occurred, the paper at the back of each blister should be pierced with a fine needle, or, in the case of gelatine prints, and if the washing is finished, they should be placed in a bath of equal volumes of water and denatured alcohol, finally soaking in pure denatured alcohol (Eastman Laboratories, 1922).

Sticking of Gelatine Prints to Glass or Ferrotype Plates. The glass or ferrotype slabs were not properly cleaned, or the gelatine was excessively swollen when putting prints on the plates (insufficient tanning, washing in water which is too warm), or the prints (on the plates) were dried at too high a temperature.

Matt Patches on Glazed Prints. These patches, small and circular, or large with irregular outlines, are due to bubbles of air which were not expelled when laying down the prints, and thus have prevented contact between the gelatine and the polished surface. When glazing on plate-glass, these air bubbles are easily visible through the back of the glass, as they form patches which are more glossy than the parts where there is perfect contact. If the print is examined in this way, after it has been put on, such bubbles can be easily expelled at the time, or the print applied afresh after re-wetting it.

Gradual Deterioration of Prints. A slow deterioration of prints may be due to bad fixation or insufficient washing. In the two following paragraphs the nature of such changes on print-out papers and on development papers is considered. In addition to these causes, change in the image may be due to impurities in the mounts and in the mountants themselves (the presence of hypo in the pulp of the mount; acid glues to which hygroscopic materials have been added).

618. Failures with Print-out Papers. *Bronzing of the Shadows.* The formation of a reddish-brown or metallic film on the dense parts of a print on print-out paper (particularly on collodion papers or papers very rich in silver) is usually due to printing from a very contrasty negative and attempting to obtain details in the high lights, the shadows being consequently considerably over-exposed.[1] If the metallization is not very pronounced, it often disappears during toning and fixation, especially when the treatment used brings about a marked weakening of the image (this does not occur with self-toning papers which have been treated with a salt bath). Bronzing can be remedied either before or after toning. In the first case, after a brief washing, the prints are bathed in a very dilute solution of hydrochloric acid or a weak solution of gold chloride (1½ drm. to 1 oz. of 1 per cent solution per 20 oz. (10 to 50 c.c. per litre)) to which a little hydrochloric acid has been added (¾ to 5½ drm. per 20 oz. (5 to 35 c.c. per litre)), according to the degree of the bronzing. After washing for about 10 minutes the prints are toned, preferably with a combined toning and fixing bath containing ammonium sulphocyanide. In the second case, the toned prints are reduced by immersion for some time in a fairly concentrated solution of copper sulphate (from 10 to 30 per cent), briefly rinsed, and transferred to the fixing bath. The metallic bronze on a print is often reduced by treating the surface with a wax or paraffin polish (A. Steigmann, 1925).

The Image as a Whole Refuses to Tone. This occurs only with separate toning baths, when the gold is exhausted, or when various impurities (hypo, sulphite, etc.) have gained access.

Parts of the Image Refuse to Tone. The parts which refuse to tone are not wetted by the solution owing to the presence of greasy spots (irregularly-shaped marks due to finger-marks) or circular spots due to air bubbles.

Brown or Black Stains. Local formation of silver sulphide by contact with traces of hypo from the fingers or a badly-washed dish. It should be a working rule not to begin fixation until a batch of prints has been toned, so as to avoid having to dip the fingers alternately into the toning and fixing baths.

Patchy Tones on Prints. The prints have adhered to each other during the toning (always keep the prints moving in the bath), or, when toning and fixing in separate baths, the prints have not been washed (or insufficiently washed) before toning.

Reddish Prints on Self-toning Papers. Too long washing before fixing. Self-toning papers should not usually be washed before fixing (or before treatment with salt solution), as washing removes the necessary toning materials (the directions given with the paper used should be followed).

Prints are too Pale when Fixed. Printing

[1] Metallic silver which has been formed in the colloidal state by the action of light is adsorbed by the silver chloride, in which it forms a reddish or purply-coloured solid solution (photo-salt). When the silver chloride is saturated, the reduced silver forms an almost continuous coating with greenish metallic reflections. In this state it is much more easily attacked by weak solvents than is the silver protected by the silver chloride in which it is embedded (F. Formstacher, 1925).

has not been carried far enough through failing to take into account the loss in depth which nearly always occurs, but to an extent which varies with the paper and the treatment used.

Pinkish Stains on the Dry Prints. These are generally caused by alkaline dust falling on the print while it is still damp. Powdered chemicals should always be handled and weighed out away from the place where the various operations are carried out. Such stains sometimes disappear if the print is washed in water which has been slightly acidified with hydrochloric acid, followed by a brief rinse in pure water.

Loss of Tone During Burnishing or Dry Mounting. The print has been heated to too high a temperature.

Gradual Fading of the Image after a Time. If the light tones become greenish or yellowish, it is usually due to the use of a combined toning and fixing bath containing no gold, or used after the gold had become exhausted, toning then being entirely due to sulphiding.

Gradual fading of the image is generally caused by incomplete removal of the hypo, which, under the influence of the oxygen and moisture of the atmosphere, gives rise to sulphuric acid, which attacks the silver image (R. Namias, 1903). A gradual discoloration of the whites of the print is usually due to incomplete fixation (use of an exhausted fixing bath).

No completely effective[1] method is known whereby photographs on print-out papers which have deteriorated in this way can be restored. The most that can be done is to try copying the print, using an appropriate colour-filter to increase the contrast of the remaining image, and a plate or film of suitable colour-sensitiveness.

619. Failures with Development Papers. *General Fogging of the Image.* General fog may be caused by storing the paper under bad conditions; by omission of the bromide from the developer (in these two cases, the margins are usually fogged); by wrong adjustment of exposure to development; or by printing a soft negative on an insufficiently contrasty paper, the working conditions having been adjusted with the object of obtaining full blacks in the shadows of the picture.

The Image has Detail but no Strength. Printing a soft negative on an insufficiently contrasty paper, the conditions having been adjusted to obtain pure high-lights.

Grey or White Streaks. Too long development of an under-exposed print; paper kept in a damp place. With gaslight papers, white or light-coloured markings, especially if the paper is damp, may be caused by using a developer containing an insufficient quantity of carbonate.

Mottling: Uneven Density of the Image. Considerable under-development of an over-exposed print; paper kept in a damp place.

Black Streaks on the Whites or Light Tones; White Streaks on the Shadows. These *abrasion* marks (§ 199) are due to the sheets of paper rubbing against each other when being taken from the packets; also to their rubbing against the negative when loading and unloading the frame, or against the bottom of the dish when a sheet immersed face downwards and covered with others is brought to the top. These marks can be removed from the margins of a print by local treatment with a reducer (§ 585), or by rubbing with a wad of cotton wool impregnated with alcohol.

Greenish Tones. Insufficient exposure.

Yellowish or Brownish Tones. Over-exposure, excess of bromide in the developer, or the use of an exhausted developer. As any bad colour in a print is not visible in non-actinic light, it is important to examine a few prints every now and then after fixation, by daylight or corrected light (lamps with blue bulbs, called *daylight lamps*) whilst the printing of a batch is in progress. In this way the colour can be seen, and any faults in the working conditions remedied forthwith. Prints of bad colour may be converted to a good black by chromium intensification (§§ 454 and 584), but as a rule such prints do not tone at all well.

Brown or Black Stains. The paper has been touched with fingers impregnated with hypo, or has been placed in a dish which has been used for fixing and not properly washed afterwards.

Yellow or Brownish Stain on the Margins and Whites of the Image. These stains are caused by the oxidation products of the developer in a highly-oxidized developer or in a

[1] If the deterioration is not too great the image can be given reasonable vigour by bleaching in a solution containing 5 per cent of sodium chloride (kitchen salt) and 1 per cent of copper sulphate. After washing for a short time, the print is placed in a solution of sodium stannite, in which the image reappears. This very unstable solution is prepared (when required for use) by dissolving 350 gr. (40 grm.) of stannous chloride (tin protochloride) in about 8 oz. (400 c.c.) of water, adding 1½ oz. (72 c.c.) of caustic soda of 40° Baumé (or 300 gr. caustic soda dissolved in about 1¾ oz. (34 grm. in 80 c.c. of water), shaking, and making up the volume to 20 oz. (1,000 c.c.) by the addition of water, finally filtering to remove the excess of stannous hydroxide (J. Desalme, 1912).

neutral fixing bath in which developer from previously-fixed prints has accumulated.[1] They may also be caused by silver which has been reduced in a very finely-divided state by the same process which leads to the formation of dichroic fog (§ 433) on negatives or transparencies, when too warm a developer or a developer which is too rich in sulphite is used (particularly on gaslight papers), or by attempting to force the development of an under-exposed print.

In the first place the print should be bleached in a solution of permanganate containing hydrochloric acid, viz.—

Potassium permanganate, 1% solution	2 oz. (100 c.c.)
Hydrochloric acid . . .	1½ dr. (10 c.c.)
Water, to make . . .	20 oz. (1,000 c.c.)

This destroys any coloration due to organic materials (ink stains, colouring matters, etc.). After a brief rinse, the print is redeveloped in full light in any developer and washed in several changes of water.

The same process considerably reduces the yellow fog caused by reduced silver, but in this case the treatment given for the removal of dichroic fog (§ 433) should be applied.

Small Light Spots with Sharp Circular or Oval Outlines. Air bubbles adhering to the paper during development. The risk of air bubbles is considerably reduced if the paper is wetted before immersion in the developer by leaving it for at least one minute in a deep dish of water. In the case of rough papers, however, it is advisable to pass a wad of cotton wool or a large soft brush over the surface of the emulsion during this preliminary soaking.

Black or Dark Spots. These spots often occur on a print which has been fixed face downwards, and under which air bubbles have been imprisoned. Access of the fixer is obstructed, and the developer absorbed in the gelatine coating allows development to continue in these parts.

Powdery White Deposit on the Dry Prints. The use of wash water containing much lime (in this case, finish off the washing with a little "soft" water, i.e. boiled or spring water); or the prints have been fixed in a bath containing alum in which precipitation of alumina has been caused by neutralization of the bisulphite. This deposit of alumina will disappear if the print is left in a 5 per cent solution of anhydrous sodium carbonate for some time, and then washed in pure water.

Bloom or Bronzing of Shadows in an Old Print. Slow action of the hydrogen sulphide (which is always present in small proportions in the atmosphere of towns) on the silver of the image. The print should first be cleaned, if necessary, by gently rubbing it with a wad of cotton wool soaked in petrol, followed by alcohol. It is then washed and sulphide-toned (§§ 587 to 592), or bleached in the hydrochloric-acid-permanganate solution referred to in the previous paragraph. Then wash, develop, and wash again in several changes of water. Treatment of prints with encaustic paste renders them less liable to this disfiguring metallic appearance in the shadows.

Yellow, Brown, or Purplish Spots appearing after Some Time on the Finished Print. Such stains, which are caused by incomplete fixation, may consist of silver sulphide formed from the silver thiosulphate left in the gelatine, or may be due to coloration, by light, of the silver chloride or bromide which has not been removed in parts of the coating, being protected from the action of the fixer by air bubbles or by adherence of prints which have not been kept moving sufficiently during fixation.

Gradual Bleaching of the Image, Starting in the Light Tones. Formation of yellowish-white silver sulphide (J. I. Crabtree, 1920), usually due to hypo left in the gelatine by incomplete washing; sulphur deposited in the gelatine by a decomposing fixing bath (milky bath); presence of hypo in the pulp of the cardboard on which the print has been mounted; action of atmospheric hydrogen sulphide. It is sometimes possible to restore such prints as follows: Clean them with a tuft of cotton-wool soaked first in light petrol and then in alcohol; then place in a fixing-bath containing alum, and wash thoroughly. If the lights are slightly stained brown or yellow by silver sulphide as a result of the slow decomposition of the silver thiosulphate remaining after bad fixation, they should be left for some time in a 2 per cent solution of potassium or sodium cyanide and again rinsed. Next, treat the prints with the hydrochloric-acid-permanganate solution mentioned in a previous part of the present paragraph, rinse briefly, and re-develop the image in full light, finally washing in several changes of water.

620. Failures in Sulphide Toning. *Yellowish*

[1] Local staining by oxidation products of the developer can arise from parts of the image not being completely immersed in the fixing bath.

Tones. The print has been insufficiently developed, usually following over-exposure. Occasionally such photographs can be saved by gold toning (§ 593).

Weak Prints, especially in the Light Tones. When bleaching with ferricyanide, the print still contained a little hypo (insufficient washing), thus forming a reducer; or sulphiding has been carried out in a sulphide solution which was exhausted or oxidized and partially converted into hypo.

Blisters. The use of too strong a sulphide solution, or too prolonged treatment in a solution of the usual strength, the gelatine being considerably softened thereby (§ 617).

Blue Spots. Formation of prussian blue by the action of the ferricyanide of the bleaching bath on particles of iron from water supplied in rusty pipes; or, more rarely, on the iron particles existing in the paper pulp or in the baryta coating. These spots may be removed, after sulphide toning and washing, by immersion in a very weak solution of ammonia, followed by brief rinsing.

CHAPTER XLI

PRINTING PROCESSES BASED ON THE SENSITIVITY OF IRON SALTS

621. General Notes. The ferric salts of organic acids (oxalate, tartrate, citrate, etc.) are reduced to ferrous salts when exposed to light. Potassium ferricyanide is likewise reduced to the ferrocyanide by the action of light. A considerable number of photographic processes based on these reactions were pointed out by Sir John Herschel (1842) and have been perfected since then by numerous photographic workers.

Any reagent which will differentiate between ferric and ferrous salts can be used to convert the barely visible image formed by the photochemical reduction into an image which is very easily visible. The following table indicates some of the reagents commonly employed for this purpose—

	Ferric salts	Ferrous salts
Potassium ferricyanide	—	Precipitate of Prussian blue
Potassium ferrocyanide	Precipitate of Prussian blue	White precipitate
Tannins, gallic acid	Bluish-black precipitate	—
β-naphthoquinonesulphonic acid . .	—	Brown precipitate
Silver salts	—	Black precipitate of reduced silver
Platinum, palladium salts, etc. . . .	—	Black precipitate of reduced metal
Gelatine, gum arabic, etc.	The colloid is rendered insoluble	—

In all cases where the differentiating reagent gives a coloured precipitate with the ferrous salt only, the reagent can be mixed with the ferric salt before sensitizing the paper, the reaction then taking place partly during the exposure to light and partly in the first wash water (or in a common solvent of the salts used). A positive image is obtained in this way if the print is made under a negative. If the differentiating reagent forms a coloured precipitate with the ferric salt, it should be used separately as a kind of developer in which the print is placed without intermediate washing. In this way a positive picture is obtained when the print is made under a positive.

A large number of other processes have been suggested which make use of the ability of ferrous salts to reduce various metallic salts (copper, mercury, gold, etc.). There are also those processes which are based on the differential actions of ferricyanide and ferrocyanide on various metallic salts (uranium, etc.). This last reaction has already been used in certain toning processes as applied to silver images (§§ 595 to 601).

Papers sensitized with the various iron salts are very susceptible to the influence of damp (fogging, loss of sensitivity, etc.), and should therefore be kept in a very dry atmosphere.

Papers sensitized with iron salts are printed in daylight or by a powerful artificial light (arc lamps or mercury-vapour lamps).

(*a*) The Ferro-prussiate Process

622. Industrial Papers for Copying Tracings. Ferro-prussiate papers and fabrics are used in considerable quantities for making "blue-prints" from engineers' and architects' tracings. They are manufactured by continuous machinery by means of which the paper is superficially impregnated with a mixture of various ferric salts and potassium ferricyanide. Such paper is supplied in rolls of 10 or 20 yd. in various kinds and of very different sensitivities, the most sensitive papers being usually those which can only be kept in good condition for a short time. A good quality, freshly-manufactured paper is of lemon-yellow colour on the sensitive side. It gradually turns greenish-yellow, light green, and finally blue. It is then practically useless. It can be kept for an almost unlimited period in a perfectly dry atmosphere (metal cases with double bottoms containing desiccating materials). In a tightly-rolled spool the outer coils and edges deteriorate faster than the central parts of the inner coils.

On exposure to light (chosen as strong as possible), the unprotected parts of the paper turn progressively a deeper and deeper tone of bluish or purplish grey, finally becoming metalized

with a silver-grey or bronzed appearance. If the exposure to light is considerably prolonged the exposed parts become lighter and lighter, while the incompletely protected regions darken. The image then appears reversed.[1] If this reversal is only partial, washing in water is often sufficient to restore the image to its ordinary condition. On the other hand, various reagents can be applied which will restore the print to a normal condition. The more vigorous prints are usually those which have undergone slight reversal.

Printing (the production of *photo-copies*) is carried out by exposing to the light the coloured surface of the sensitive paper, which has been placed in contact with the back of the tracing, the exposure being continued until the lines appear of a greenish tint, and the ground is of a pale blue colour. If in doubt as to the appearance the print should present, a strip of the same paper should be simultaneously exposed to the same light under a tracing of the same colour and transparency on which a few lines have been drawn in indian ink; from time to time a small piece of this test paper should be torn off and washed. When very large tracings have to be printed, or in an establishment which turns out large numbers of prints, continuous printing machines are used. In such machines, an endless belt carries the tracings to be printed, together with a band of ferro-prussiate paper, round a glass half-cylinder, which is illuminated from the inside. The paper is washed by jets of water, arranged on the same or on a separate machine, and finally dried between endless canvas belts passing round one or more heated cylinders.

When the washing is carried out sheet by sheet in a dish, it is advisable to do so in three or four washings, taking about 10 minutes in all. The first wash water, which very quickly becomes turbid with excess of salts, should be thrown away almost immediately. As large-sized dishes are usually required, they are generally made of wood or wood lined with zinc, although the zinc is attacked in time by the salts removed from the paper.

Unless the print is greatly over-exposed or reversed, the image appears in white lines on a blue background as soon as washing is commenced. Water which contains large quantities of calcium salts causes the formation of a deposit of yellowish basic iron salts on the image, and at the same time the image is weakened by their alkalinity, the weakening becoming more pronounced if the washing is prolonged. These defects may be remedied by carrying out the final washing in water which has been acidified with a little hydrochloric acid, which lightens the whites and strengthens the blues of the image. This acid must on no account be added to the first wash water, as it brings about formation of a general blue fog. Hydrochloric acid treatment and the treatments mentioned below cannot be carried out in zinc dishes, as the metal is very rapidly attacked.

Over-exposed prints, in which the lines are more or less strongly blued, and prints which have undergone reversal, in which the lines are darker than the ground, may be restored to a normal condition by treating with an oxidizing solution (a very weak solution of hydrogen peroxide, eau de Javelle, potassium bichromate, persulphate, chlorate, etc., neutral or slightly acidified). Such treatment should be deferred until after the second washing at least, and should be followed by washing in several changes of water.

If no drying apparatus is available, the prints are hung on lines of cord or string, or are laid flat on frames covered with canvas or wire netting. If the frames are fitted with the netting, the sheets should be dried face upwards, as contact with the metal destroys the image.

Blocking-out is done with a paint-brush, using prussian blue water-colour. White lines are added with a pen dipped in a 20 per cent solution of neutral potassium oxalate, thickened with a little gum arabic (a 5 per cent solution of oxalic acid can also be used, but it causes rapid corrosion of the nibs). Parts retouched in this way should be washed or at least briefly rinsed (with the help of a sponge), otherwise the blue colour is liable to re-appear after a time.

As perspiration is always alkaline, one should avoid touching the dry prints with moist hands. The hands can be conveniently dried with talc powder if this is the case.

Ferro-prussiate prints fade if exposed to bright light for a long time. They can be restored by keeping in the dark, especially if the atmosphere is damp.

A large number of methods have been suggested by means of which ferro-prussiate paper

[1] This inversion seems to be due to the progressive reduction of the ferricyanide (less sensitive than the ferric salt) giving rise to a white ferrous ferrocyanide which is easily brought back to the state of Prussian blue by oxidizing agents or, more slowly, by the simultaneous action of air and water.

can be toned in various colours. The results obtained are usually disappointing.

623. True-to-scale Process. A process originated by F. and J. Dorel (1900) allows a relatively large number of copies (up to about 20) to be obtained from a ferro-prussiate print, the latter being used *immediately after its removal from the printing frame, and without washing*. The lines are produced on a white base in greasy inks of any desired colour, and the prints are free from the distortions and deformations which occur when a paper is wetted and dried.

For the purpose a jelly paste is used (consisting of a strong solution of gelatine to which some glycerine, ferrous sulphate,[1] ox-gall, an antiseptic, and a yellow or white pigment have been added), which, after it has been melted on a water-bath, is run in a layer about $\frac{1}{10}$th in. thick on to a wooden slab covered with thin, well-stretched zinc which has been roughened with glass-paper to facilitate adherence. When the jelly is properly set, it is ready for printing.

The prints to be used for the purpose should be made on slow ferro-prussiate paper sensitized with a comparatively concentrated mixture in which the ferric salt should be in excess, giving clean and vigorous images, while over-exposure, and especially reversal of the image, should be avoided.

The print from the printing frame is carefully laid face downwards on the surface of the gelatine mixture with one application, avoiding air-bubbles and creases; good contact is assured by gently rubbing with a large pad of soft rags. After remaining for about a minute in contact, the paper is lifted off, and the gelatine quickly inked over with typographic or copper-plate ink, spreading it with a gelatine roller of the type used in letterpress printing. The ink adheres only to the parts corresponding with the lines of the image. The markings caused by creases, breaks, or stains on the tracing can be cleaned off with a damp sponge if necessary. Printing should be done on a well-sized paper, pressure being applied with a pad or a roller when the paper has been applied to the inked surface. After the paper has been removed, the ink can be dried with powdered talc if the print is required for immediate use.

Normally, the gelatine is kept moist by the glycerine, and will not take the greasy ink. When the ferro-prussiate paper is applied, the excess of ferricyanide in the parts protected by the lines on the tracing is absorbed by the damp gelatine with which it is in contact, and, reacting with the ferrous salt, forms a blue line. The prussian blue, formed in this way, brings about tanning of the gelatine, which is then able to retain the greasy ink.

Any corrections or alterations can be made on the image before it is transferred to the jelly. Lines which are to be erased can be covered with a solution of gum arabic; parts of the design which require modification can be covered with a print from a rectified tracing, using suitable register marks. If desired, the prints can be made on tracing paper, in which case the ink is reinforced with powdered bronze, which only adheres to the inked lines. Transfer inks can also be used for printing in conjunction with special papers which allow of the inked image being transferred to stone or zinc by the ordinary lithographic processes; this method is used if a large number of copies have to be made.

Printing having been done, the jelly is washed with a wet sponge to remove the adhering ink, scraped with a putty knife, and re-melted, together with a suitable proportion of fresh jelly, for use again.

624. Printing on Ferro-prussiate Paper from Ordinary Negatives. The ferro-prussiate papers, as prepared for copying tracings, are, with the exception of the slowest varieties, not usually very suitable for making full-tone prints, and are only sold in quantities which are too large for ordinary photographic use, there being a great risk of such papers deteriorating before a roll is finished. Nevertheless, use may be made of these papers for record purposes, the prints forming a kind of "register" of the negatives.

The sensitizing of papers and fabrics (linen and cotton) by the ferro-prussiate process, in small quantities, can be carried out by the amateur very simply. The formulae for sensitizing given below are suitable for obtaining vigorous, full-tone prints of good gradation, but such papers are very much slower than those obtained by the use of the formulae used in the manufacture of industrial papers. It should be borne in mind that the papers and fabrics sensitized in this way are only suitable for printing from vigorous but not excessively hard negatives.

Any drawing paper or writing paper can be used for sensitizing, also coated papers (of the

[1] For occasional use, the addition of ferrous sulphate, a substance which oxidizes very rapidly, to the jelly should be avoided; when required for use, the gelatine layer should be sponged over with a fresh solution of ferrous sulphate (D. A. Spencer, 1928).

quality used for collotype printing) and gelatine-coated papers (double transfer papers for the carbon process). These last two kinds of paper give prints with more detail in the half-tones, but uncoated papers are usually preferred.

Papers for personal use are sensitized with a mixture of potassium ferricyanide[1] and an iron ammonium citrate, using one of the two commercial varieties (brown or green).[2] Very much faster papers may be obtained with the green citrate (about 5 minutes instead of 15 minutes for printing under a negative in the sun). The keeping qualities are only very slightly reduced, but the prints obtained are of a very much brighter blue (E. Valenta, 1897).

After making a series of experiments, we consider the following proportions and concentrations to be the best for the purpose of compounding sensitizing solutions with green and brown citrate respectively—

Potassium ferricyanide .	700 gr. (80 grm.)
Ferric ammonium citrate (green) . . .	1,600 gr. (180 grm.)
Water, to make . .	20 oz. (1,000 c.c.)
Potassium ferricyanide .	1 oz. (50 grm.)
Ferric ammonium citrate (brown) . . .	830 gr. (95 grm.)
Water, to make	20 oz. (1000 c.c).

Of the two papers prepared in this way, that made with the green citrate is more suitable for use with vigorous negatives than that prepared with the brown variety.[3]

[1] Crystals of ferricyanide should always be rinsed to free them from the yellowish coating with which they are usually covered.

[2] The iron ammonium citrates are compounds which are not crystallizable under the usual conditions of manufacture, and are sold either as standardized syrupy solutions, or in the form of scales, prepared by the evaporation of the said solutions spread out in thin layers in dishes. The dry products are very deliquescent, and their solutions are very liable to grow mould. The addition of small quantities of sodium formate improves their keeping qualities; a piece of camphor can also be floated on the solution with the same result. The scales of the two compounds have the average composition: *green* $(C_6H_5O_7)_3Fe_2(NH_4)_3$; *brown* $(C_6H_5O_7)_2H_2Fe_2(OH)_3)(NH_4)$, $3H_2O$.

[3] The ratios of the opacities of a negative yielding a just perceptible blue deposit and that producing a blue of maximum depth (measured after the prints have been washed) are 47 : 1 and 34 : 1 respectively for green and brown citrate. The addition of a small quantity of bichromate to the sensitizing mixture allows of soft negatives being printed.

The sensitizing solution is most easily[1] applied to the paper with a brush consisting of a wad of cotton wool fixed on the end of a glass tube by a loop of thread passing up the tube and fixed at the other end, e.g. with a cork. The solution is distributed over the sheet of paper as in applying water-colours, the paper being fixed to a board or a piece of stout cardboard which is inclined at an angle of 30°. (The paper may be fixed with clips, but pieces of cork or cardboard should be interposed so as to avoid any contact of the sensitizing solution with the metal.) The sensitizing should be done in very weak or artificial light, using a clear solution prepared immediately before use. The sheets are put to dry forthwith, hanging them on tightly stretched lines in a room from which daylight is excluded. Care should be taken to prevent the drippings staining clothing or floor coverings.

The considerable falling-off in the depth of the image which occurs during washing should be taken into account when printing.

If required, a ferro-prussiate print may be drawn over with pencil or indelible ink, the image being then removed by immersing it in an approximately 5 per cent solution of oxalic acid, followed by washing in several changes of water. The same solutions can be used for sensitizing fabrics (linen or cotton) by immersion. The working methods are identical: the fabric should be stretched during drying, and, after printing and washing, should be ironed while slightly damp.[2]

(*b*) Other Commercial Iron-printing Papers

625. Cyanotype Paper. Cyanotype paper (H. Pellet, 1878) yields copies consisting of blue lines on a white ground when printed under a tracing. This paper, which is impregnated with a mixture of ferric salts and gum arabic, has a sensitivity comparable with that of the fastest ferro-prussiate papers, and, consequently, can only be handled in a very weak light. As the image is only slightly visible before development

[1] The paper may be also floated on the sensitizing solution, but for this purpose a large excess of solution must be made up, and such a solution does not keep in good condition for very long.

[2] Linen and cotton fabrics which have been "mordanted" by the formation of a ferro-prussiate image can be dyed quite easily. For example, a beautiful violet purple tone is obtained with a bath of boiling alizarine dye. The image should then be washed in hot soap and water, rinsed, lightly starched, and ironed.

(light yellow lines on a white ground), the printing is timed by means of trial strips exposed under a tracing of the same opacity on which a few lines have been drawn in indian ink, these test strips being developed one by one as printing proceeds.

The print is developed without intermediate rinsing as soon as it has been removed from the printing frame, the paper being floated on a 10 per cent solution of potassium ferrocyanide (yellow prussiate of potash).[1] The time of development should not exceed about 30 seconds, otherwise the lines tend to spread. If placed in the developer, a sheet of unexposed paper would become uniformly blue, whilst a sheet which had been uniformly exposed to the sun for a few moments would remain white. Under-exposure is therefore shown by colouration of the ground, and over-exposure by a lack of depth of the lines. Care should be taken to avoid wetting the back of the paper during development; the four sides of the sheet of paper are turned up so as to form a kind of dish, which is floated on the bath, the hands being gently passed over the back of the paper to ensure uniform wetting at the under surface.

After a short wash, the prints are fixed in a 4 per cent solution (by volume) of sulphuric acid[2] or a 10 per cent solution of hydrochloric acid. This bath dissolves the gum which has not been rendered insoluble, and at the same time washes away the white ferrous ferrocyanide formed in the lines of the image, and which would gradually turn blue on oxidation. Wooden dishes lined with gutta-percha are generally used for this acid bath. The final washing should be done with a strong jet of water, or, if the latter is not available, the print should be brushed under water to dislodge particles of gum arabic not removed in the acid bath.

Cyanotype paper is useless for printing from full-tone negatives.

626. Ferro-gallic Papers. Ferro-gallic paper (A. Poitevin, 1861) gives copies in purplish-black lines on a light ground when printed under a tracing. Its preparation differs very little from that of cyanotype paper, but the coating is slightly less sensitive. Printing is timed with the aid of test strips, developed as printing proceeds.

[1] Potassium ferrocyanide, $K_4Fe(CN)_6$, occurs as large lemon-yellow crystals, easily broken up or crushed with very slight pressure. They are slightly efflorescent, very soluble in water (about 25 per cent at 60° F.), the solution so formed keeping almost indefinitely.

[2] See § 364 (footnote) for caution respecting mixing sulphuric acid.

Development is carried out, without intermediate rinsing, as soon as the paper is taken from the printing frame, by floating it on a bath made up, for example, as follows—

Ordinary alum . .	130 gr. (15 grm.)
Gallic acid . . .	90 gr. (10 grm.)
Water, to make . .	20 oz. (1,000 grm.)

The gallic acid may be replaced by tannin. A very small quantity of oxalic acid may be added to obtain purer whites. Development should last about three minutes. Under-exposure causes the lines of the image to spread, the ground becoming deeply coloured; with over-exposure the lines are broken and faint. The ground is always tinted a light violet colour. An exhausted bath gives only a very weak image. The developed print is washed in several changes of water; a very dilute bath of hydrochloric acid used between two washings will often lighten the ground of an under-exposed print.

The copies should first be dried as much as possible by pressure between blotting paper, otherwise the lines tend to spread while drying.

Papers which are developed by treatment with gallic acid, are gradually being abandoned in favour of the so-called "water-bath" papers, which only require washing in plain water. With such papers, the gallic acid necessary for development is applied, with polishing brushes, as a very fine powder on the surface of the sensitive layer as soon as the latter has been dried. The first washing must then be carried out in a fairly small quantity of water so as to avoid excessive dilution of the very small quantity of gallic acid adhering to the paper.

Ferro-gallic papers are not suitable for printing from full-tone negatives.

(*c*) Silver-iron Printing Papers

627. Sepia Photo-copying Papers. "Sepia" paper (H. Shawcross, 1889), which is prepared by soaking thin translucent paper in a solution containing iron ammonium citrate, citric acid, and silver nitrate, is widely used for making copies from tracings. Such copies, in white lines on a brown ground, may be used as negatives for making prints on ferro-prussiate paper. In this way it is possible to obtain copies in blue lines on a white ground with the latter paper. In this case printing is done by exposing the sensitive surface of the "sepia" paper in contact with the side of the tracing bearing the design,

while the blue print is made with the sensitive surface in contact with the image side of the negative.[1]

The keeping properties of " sepia " paper are determined principally by the deterioration of the paper support, the mechanical resistance of which is very quickly reduced, especially at high temperatures.

During the exposure to light, the image appears gradually, and the printing can thus be judged by inspection. On removal from the printing frame, the paper is placed at once in a 2 per cent solution of hypo, in which it is allowed to remain for about five minutes; it is then washed in several changes of water. Although the image does not appear very opaque, it absorbs nearly the whole of the radiations to which ferro-prussiate paper is sensitive; its effective opacity is thus very much greater than its apparent opacity.

A more opaque image may be obtained by replacing the above-mentioned fixing solution by a 15 per cent solution of crystallized sodium sulphite or a 7·5 per cent solution of anhydrous sodium sulphite (R. Namias, 1901). Such treatment, however, being more expensive, is not generally used.

Sepia paper negatives, made from tracings, are occasionally used for process work.

628. Local Sensitizing of Papers (Notepaper, Menus, etc.). Sensitizing solutions for use with a brush have been put on the market from time to time for the local sensitizing of drawing paper, Bristol-board, or notepaper; these solutions are practically identical with the sensitizing mixture given above. As an example, the formula of such a mixture is reproduced here, according to the analysis of a commercial preparation (E. Valenta, 1899).

Dissolve separately—

A	Ferric ammonium citrate (green) . . .	2 oz. (100 grm.)
	Distilled water, to make .	20 oz. (1,000 c.c.)
B	Silver nitrate . .	1,220 gr. (140 grm.)
	Distilled water, to make	12–16 oz. (600-800 c.c.)

Add pure ammonia solution drop by drop to solution (B), shaking continuously, until the brown precipitate first formed is re-dissolved. If an excess of ammonia, which can be easily recognized by its smell, has been added in this way, the mixture should be rendered odourless by adding very dilute sulphuric or citric acid drop by drop.

The two solutions are mixed in the dark, and the sensitizer prepared in this way should be kept in the dark until required.

For printing from somewhat weak negatives, a few drops of a 5 per cent solution of potassium bichromate may be added to the mixture.

The solution is applied with a brush (the brush should not be bound with metal of any kind) on the parts to be sensitized, using it either plain or after it has been thickened, just before use, by the addition of a little freshly-prepared starch or arrowroot paste.[1] Fabrics should be sensitized preferably by immersion, after the liquid has been thickened with a little solution of white dextrine.

Sensitizing should be carried out in a very weak light or in artificial light. Drying is done preferably in complete darkness. The sensitized sheets may be kept for several days in dry weather, or very much longer in a desiccated atmosphere.

Printing is done in bright daylight; the greenish tint of the sensitized parts allows of their being easily located. When the image has attained a slightly greater depth than that finally required, it is fixed in a 3 to 5 per cent solution of hypo to which about 1 to 2 per cent of anhydrous sodium sulphite has been added. After remaining five minutes in this bath, it is thoroughly washed. The sepia tone obtained in this way may be modified before or after fixation by toning with gold, this process also improving the permanence of the image.

629. Kallitype and Imitation Platinum Papers. Soluble ferric oxalate is reduced to the insoluble ferrous oxalate by the action of light. The latter salt is a powerful reducing agent but, by reason of its insolubility, it is unable to reduce silver salts unless a solvent of this salt is added in the form, for example, of a concentrated solution of alkali oxalates or tartrates.

[1] As a rough indication, the approximate *relative times of exposure* which are required to give prints on the various types of commercial papers used for the copying of tracings are given below—

Cyanotype paper	10
Ferro-prussiate paper . . .	10–50
Ferro-prussiate fabrics . . .	25
Ferro-gallic paper (water bath) . .	40–50
Sepia paper	25

[1] Starch paste is prepared by mixing the starch with a very little water until a kind of milk is obtained which is then poured into boiling water. After boiling for a few minutes, it is allowed to cool, and the skin which is formed on the surface removed.

This reaction may be used in three different ways—

1. The paper is sensitized with ferric oxalate; the image is developed with a solution containing both the silver salt and a solvent of the ferrous oxalate.

2. The paper is sensitized with ferric oxalate to which a silver salt has been added. The image is developed with a solvent of ferrous oxalate (Kallitype paper).

3. The paper is sensitized with a mixture of ferric oxalate, a silver salt, and a large excess of alkali oxalates. The image is developed in plain water by immersion or by steaming (imitation platinum paper; E. Boivin, 1891).

We will confine ourselves in this instance to indicating the method of preparation and the use of a Kallitype paper, according to a modification (N. C. Hawks, 1916) of the original working methods of W. W. J. Nicol (1890).

A good quality drawing paper is given a supplementary sizing of starch, arrowroot, or gelatine (the paper being floated on a 1·5 per cent paste or solution); when dry, it is coated with the following sensitizer by means of a soft brush—

Ferric oxalate . . .	4½ oz. (225 grm.)
Neutral potassium oxalate .	500 gr. (55 grm.)
Silver nitrate . . .	500 gr. (55 grm.)
Distilled water, to make .	20 oz. (1,000 c.c.)

After drying, it is exposed to daylight until the outlines of the shadows are visible.

According to circumstances, a 2 per cent solution of potassium bichromate is added to the developer given below. This permits of the contrast of the print being regulated as required within wide limits, the contrast being increased as the bath is made richer in bichromate (medium quantity; 30 minims per 1 oz. of bath (6 c.c. per 100 c.c.)).

Borax	1 oz. (50 grm.)
Sodium tartrate . .	525 gr. (60 grm.)
Warm water, to make . .	20 oz. (1,000 grm.)

The sodium tartrate may be replaced by Rochelle salt.[1] The developer prepared in this way gives black tones; warmer tones may be obtained by reducing the quantity of borax; the addition of a few drops of phosphoric acid produces a purple tone.

[1] The double tartrate of sodium and potassium.

Development may be carried out in two baths, one containing the average quantity of bichromate, the other containing none (or very little). Development is begun in the first bath and continued in the second if the contrasts seem excessive.

After development, wash for two minutes in plain water, and fix in a very dilute solution of hypo (about 3 per cent), made alkaline by the addition of a few drops of ammonia (being extremely dilute, the fixing bath should be renewed very frequently). Afterwards, wash in five or six changes of water, press between blotting paper, and put to dry.

The prints obtained in this way may be treated with any of the toning baths which are used for silver print-out papers.

(*d*) Platinum-iron Printing Papers

630. Platinum Papers. Pictures consisting of reduced metallic platinum may be obtained by methods similar to those indicated in the two preceding paragraphs by using potassium chloroplatinite instead of silver nitrate. The commercial "platinum" papers are similar to kallitype paper in that they contain the ferric oxalate and the chloroplatinite and require to be developed in a solution capable of dissolving the ferrous oxalate formed (W. Willis, 1878).

Platinum prints, apart from the pigmentary quality of the image, which is not covered by any glossy coating, have the rare quality of being entirely unaffected by all the usual destructive reagents, that is, as long as the paper forming the support is able to resist them. Thus, platinum prints have been recovered intact from a sunken ship which was re-floated after several years. Unfortunately, the extremely high price of platinum considerably restricts the use of this fine printing process. "Palladium" papers, with almost identical properties, have been used for some time, but even this metal reaches prohibitive prices.

Platinum papers are generally supplied in two kinds, giving black and sepia tones respectively; each kind is obtainable on various types of support, thin or thick, smooth or rough.

Platinum papers are extremely susceptible to damp, and are therefore usually supplied in metal tubes which have been hermetically sealed after desiccation; when the original package is opened, the unused sheets should be kept in a dried atmosphere, for example, in a tin fitted with a double bottom containing drying materials.

Platinum papers are only suitable for making prints from negatives of fair vigour but not excessive in this respect.[1]

Owing to their high sensitivity, platinum papers should only be handled in a very weak light, both when filling and emptying the printing frame, as well as when examining the progress of printing.

The sensitive surface of the paper is of lemon-yellow colour; the image appears as purplish-grey, inclining to a light orange-brown in the densest parts of the shadows when fully printed. No details should be visible in the high-lights.

Various toning processes have been suggested for platinum prints[2]; the toned images, however, no longer possess those qualities which distinguish a print on platinum paper, and at the same time are not of undoubted permanence. For these reasons the processes will not be described.

631. Use of Black-tone Platinum Papers. It is advisable to develop the prints almost immediately after they are taken from the printing frame. If development is deferred for a few hours the papers should be kept away from damp.

Development may be done in either a hot or a cold solution; printing should not be carried quite so far for hot development.

Development is carried out in weak daylight or in strong artificial light.

Extreme cleanliness should be observed throughout the operations. Glass dishes should preferably be used, as they are the only kind which can be properly cleaned; for hot development, an enamelled iron dish, free from cracks, and kept solely for the purpose, may be used.

Two formulae for developing baths are given below—

HOT DEVELOPMENT (100–180° F.)

Neutral potassium oxalate .	6 oz. (300 grm.)
Oxalic acid . . .	45 gr. (5 grm.)
Water, to make . . .	20 oz. (1,000 c.c.)

To be used without dilution.

COLD DEVELOPMENT (60°–70° F.)

Neutral potassium oxalate .	$2\frac{3}{4}$ oz. (140 grm.)
Di-sodium phosphate . .	175 gr. (20 grm.)
Oxalic acid . . .	45 gr. (5 grm.)
Water, to make . . .	20 oz. (1,000 c.c.)

For use, dilute with an equal volume of water.

Hot development is almost instantaneous; cold development takes about one minute. No harm will be done if the immersion in the bath is prolonged, as the development ceases of its own accord when the ferrous salt, formed by the action of light, has reduced the equivalent quantity of platinum.

In point of fact, the hot-development process has now been practically abandoned, and is only used for the treatment of papers which are required to give sepia tones.[1]

The dry print is usually floated face downwards on the solution. In order to do this, it is taken hold of by two opposite corners, so as to give the sensitive side a pronounced convex curvature. It is then lowered on to the surface of the liquid, and, when the lowest part of the paper is in contact with the solution, the two hands are gently lowered and the print released. After a few moments, it is raised from the bath to dislodge any air bubbles if necessary.

Various modifications may be brought about in the character of the image. The addition of a little potassium bichromate to the developing bath increases the contrasts of the picture, principally by stopping the development of the light tones, and so making it necessary to push development a little further. On the other hand, the addition of glycerine to the developer considerably retards the building-up of the image, and can therefore be used to arrest development of an over-exposed picture before completely developed. This property of glycerine is particularly useful for the localized control of development (A. Maskell, 1892).

Instead of immersing the print in the developer, the operation can be performed with a brush, after the printing has been continued until the lightest tones are visible. The following solutions are placed in four small glass jars.

[1] Failures have been known to occur when platinum papers have been used for making prints from negatives which have been intensified with mercury (light marks appearing to correspond with a local densitization).

[2] Uranium toning (and similar processes) of platinum prints is not effected by attack of the platinum, as in silver images, the platinum remaining unaltered in the toned image, having merely played the part of a catalyst in the deposition of the coloured ferrocyanide (A. von Hübl, 1895).

[1] Sepia tones may be obtained on black-tone papers by adding to the hot developing solution about a tenth of its volume of a 5 per cent solution of mercuric chloride, and keeping the cloudy liquid so obtained in constant movement. The tones obtained in this way are not usually so fine nor so uniform as those given directly by the special papers in which the mercury salt has been incorporated with the sensitizing mixture.

(*a*) Pure glycerine.
(*b*) A mixture of 4 parts of glycerine and 1 part of cold developer.
(*c*) A mixture of equal volumes of glycerine and developer.
(*d*) Plain developer containing no glycerine.
One or more brushes are kept for each jar.

The print is fastened on a board with drawing-pins, or pressed on to a glycerined sheet of glass, and is first of all uniformly coated with glycerine, the excess being removed with blotting-paper. Guided by a print from the same negative and by the rough outline of the image produced by exposure to light, the whole of the print is first covered with the developer containing the most glycerine; the picture comes up very slowly. Development is retarded in the parts to be obtained of less depth by covering them with pure glycerine, while development is accelerated in the parts which require strengthening by covering them with developer containing 50 per cent of glycerine, or with developer containing no glycerine, after the liquid already impregnating the print has been removed with blotting paper.[1] Immediately the desired result has been obtained the print is quickly transferred to the fixing bath.[2]

632. Platinum prints are fixed, *without intermediate rinsing*, in several successive baths of weak hydrochloric acid (containing $2\frac{1}{2}$ drams of pure concentrated acid per 20 oz. of bath: 15 c.c. per litre; the quantity of acid is reduced to about $1\frac{1}{2}$ drm. (10 c.c.) in the case of sepia prints), the iron and platinum salts being removed by these baths. The prints should remain about five minutes in the first bath, then 10 minutes in the second, and 15 minutes in the third. A number of prints may be fixed in the same baths, either simultaneously or successively. If the operations have been carried out correctly, the third bath should remain colourless (pure hydrochloric acid is perfectly colourless). If, however, the third bath does not remain colourless, a further additional bath should be employed.

As soon as the third bath becomes coloured to any extent, it should be replaced by a fresh bath, the old one being then used as the second bath, while the solution which was originally the second becomes the first bath. During fixation the paper loses its original yellow colour and becomes perfectly white.

After fixing, the prints should be washed for about 15 minutes, the water being renewed four or five times; they can then be put to dry; they should not be pressed between blotting paper, as this occasionally causes stains.

Old prints on platinum paper which have not been properly fixed often turn yellow owing to the presence of a residue of platinum and iron salts. Such prints may be restored by washing them afresh in hydrochloric acid, followed, after a short wash, by immersion in a 5 per cent or 10 per cent solution of ammonium oxalate. Such an eventuality can be completely avoided by treating the fixed prints before the final washing with a similar oxalate bath (R. Jacoby, 1901); fixation can even be done in baths of ammonium oxalate or citrate alone, i.e. without hydrochloric acid.

633. Sensitizing Papers for Platinum Printing. The preparation of platinum papers having similar characteristics to the commercial papers does not generally yield good results in the hands of an amateur. Further, such papers possess bad keeping qualities, and must therefore be prepared in very small quantities at a time, which makes the accurate weighing-out of small amounts of the materials of the sensitizing bath a delicate matter.

However, the sensitization with ferric oxalate of a paper which is to be developed with a solution of potassium oxalate containing potassium chloroplatinite does not present any particular difficulty. The method given below is due to W. S. Davenport (1900).

A smooth or rough paper, according to the size of the prints to be made, is chosen. Papers intended for water-colour drawings should preferably be used. Although such papers are already sized, it is a good plan to apply an additional sizing in order to confine the image to the surface of the paper. If this is not done, the image is partially buried in the substance of paper itself.

Put 70 gr. (8 grm.) of white gelatine to swell in about 20 oz. (1 litre) of water, melt on a water.bath, and add about 17 gr. (2 grm.) of ordinary alum, filtering, if necessary, through closely-woven cloth. Pour the hot liquid into a dish, and float the paper face downwards on the solution after marking the back of the paper with a pencil. If necessary, the bath should be warmed up from time to time, so as to avoid over-sizing the paper, in which case there would

[1] Use white sheets of blotting paper, free from fluff, which have been cut beforehand to the required size, and which can be thrown away after use.

[2] Double-tone effects may be obtained if desired by using a developer to which some mercuric chloride and glycerine have been added on certain parts of the picture (e.g. flesh tones in the case of a portrait).

be a risk of the image not adhering to it. After a few minutes in contact with the solution, the paper should be allowed to drain and then put to dry away from dust.

The sensitizing solution should be prepared in weak daylight or in artificial light. For this purpose the following should be dissolved—

Ferric oxalate scales	½ oz. (25 grm.)
Oxalic acid	18 gr. (2 grm.)
Lead oxalate[1]	9 gr. (1 grm.)
Hot distilled water, to make	2 oz. (100 c.c.)

The solution is then decanted or filtered, to get rid of small quantities of undissolved lead oxalate if present.

The image will adhere to the paper more easily if a very little potassium chloroplatinite is added to the sensitizer, viz., in very much smaller amount than that required to form a platinum image. For example, about 40 minims (1 c.c.) of a 10 per cent solution of potassium chloroplatinite (10 gr. dissolved in 100 minims of water) can be added to 400 minims (10 c.c.) of the sensitizing mixture given above. By this method very soft pictures can be obtained from contrasty negatives. The contrasts of a picture can be increased by adding to the same mixture a few drops of a 10 per cent solution of potassium bichromate. When coating rough papers, which tend to absorb a larger quantity of liquid, the sensitizing solution may be slightly diluted.

The sensitizer, contained in a small cup, is spread over the paper with a large brush (this should not have any metal binding) in the same way that a flat wash tint is applied to drawing paper. The paper should be dried fairly quickly; it should be allowed to remain in the atmosphere of the room for about 20 minutes, drying then being finished off by hanging the paper near a stove or heater.

The precautions to be observed for the storage of papers and for the filling of printing frames are the same as for commercial platinum papers. When printed, the image is much less visible, and it is only by experience that one is able to judge what the appearance of the image should be when correctly printed.

[1] The lead oxalate, which is necessary to aid the reduction of the platinum salt, should be prepared by mixing equal volumes of a 10 per cent solution of lead acetate and a 4 per cent solution of oxalic acid; a white precipitate of lead oxalate is formed, which should be collected on a filter, washed several times, and then allowed to dry.

The developer is prepared by adding one part of a 10 per cent solution of potassium chloroplatinite to 10 parts of a mixture such as the following—

Neutral potassium oxalate	4 oz. (200 grm.)
Di-sodium phosphate	1 oz. (50 grm.)
Water, to make	20 oz. (1000 c.c.)

Some precautions should be taken to ensure uniformity of development, especially if only a very small quantity of liquid is used. A soft, preferably camel-hair, brush, about 1 in. to 1½ in. wide, should be used for the smaller sizes, while a 2 in. brush is essential for the large sizes. It should be moved over the picture with a quick, light movement, dipping it in the developer for each stroke so as to ensure an equal and uniform action of the solution.

As soon as the print is uniformly impregnated, it is left until development is complete.

Fixing and washing are carried out as recommended for the commercial papers.

634. Recovery of Platinum Residues. The extremely high cost of platinum renders it necessary to recover the platinum remaining in the developing and fixing baths as well as that contained in waste sheets and trimmings. The directions given below are taken from a circular published in 1920 by the Platinotype Co.

Clippings of unused paper and prints which have been discarded during development should be fixed in the old acid baths; prints which have already been fixed should be dried and incinerated, the ashes being placed in the vessel containing the used developing and fixing baths. (The black deposit which sometimes appears on the dishes used for development consists of platinum and should also be recovered.)

The accumulated liquid should first of all be neutralized by adding to it about 1/20th of its volume of a 15 per cent solution of anhydrous sodium carbonate, in small quantities and with constant stirring. Then a volume equal to that of the carbonate of a 2·5 per cent solution of hydrazine sulphate (prepared with hot but not boiling water) should be slowly added to the mixture, and the whole stirred three or four times for the first half-hour. The liquid soon becomes cloudy, depositing platinum slightly contaminated with iron salts. Allow to stand for at least four days, so that the platinum can settle to the bottom of the vessel. The greater part of the liquid is then siphoned off, taking

care to avoid carrying over any of the precious metal. The remaining liquid is stirred up to get the platinum into suspension and is then poured on to a filter resting in a funnel, which should be placed in a bottle, so as to catch the platinum in case the filter breaks. When dry, the filter should be kept for further use.

When an appreciable quantity of platinum has been collected in this way, the filter should be dried and folded so as to enclose the platinum.

Never attempt to sell precious metal residues in very small quantities, as the cost of refining them represents a very appreciable proportion of the total value of the metal.

CHAPTER XLII

PIGMENT PROCESSES

(*a*) The Carbon Process: General Considerations

635. Advantages of the Carbon Process. The carbon process is unquestionably the most beautiful printing process that a photographer can employ when he is not aiming at a personal modification of the negative. It is one of the most flexible in regard to choice of colour and of contrast. It is also one of the few photographic processes which yield practically permanent images, and on any type of support at the choice of the photographer. In addition, it is one of the easiest processes to work. There exists a fixed opinion in the minds of those who have never worked this process that it presents innumerable difficulties and so is very little used. The absence of competition amongst the few manufacturers of materials, and the very limited markets, result in papers for carbon printing being sold at relatively high prices. But the cost ought not to exceed materially that of bromide papers. This naturally acts as a deterrent to the more general use of carbon printing.

636. Action of Light on Bichromated Gelatine. When gelatine is impregnated with a bichromate, dried in a current of air, and exposed to light,[1] a brown image is formed on a yellow ground. It can then be ascertained that the parts which have darkened to a brown tint have lost their solubility in warm water; or, at least, can only be dissolved in water much hotter than that which would dissolve those parts which have been protected from the action of light. The property of swelling in cold water is also very much reduced in the exposed parts.[2] Under normal conditions the proportion of chromium oxide in combination with the gelatine is much greater than that which combines with gelatine tanned by immersion in a solution of chrome alum (Lumière and Seyewetz, 1905).

While in a liquid condition, or even when semi-liquid in the form of a jelly, bichromated gelatine will only darken after an exposure to light lasting several days.

The sensitiveness is so slight that it can be regarded as non-existent.

Bichromated gelatine which has been dried by being kept for several days in a box in which the air has been dried by lumps of fused calcium chloride, although it may still retain as much as 5 per cent of water, has largely lost its sensitiveness, and has, in addition, become very brittle.

Bichromated gelatine gradually becomes insoluble if kept in the dark. This insolubilization is much more rapid and much more complete when the gelatine contains a large proportion of bichromate, and when it has been kept in a warm and moist atmosphere. This spontaneous insolubilization (by the chromic acid present as an impurity in the bichromate or liberated by hydrolysis of this salt) is considerably retarded by the addition to the bichromated gelatine of small quantities of alkaline citrates and oxalates (R. Namias, 1903), or, better still, of neutral chromate which has not the disadvantage of decreasing the speed as do all the other adjuvants suggested for the same purpose (E. Elöd

[1] The radiations most active on bichromated gelatine are from 2,000 to 4,000 A.U. (the radiations less than 3,500 A.U. do not come into action as they are absorbed by the glass of the printing frame and by the supports of the negatives), sensitivity then decreasing slowly and reaching zero at about 5,750 A.U. (R. F. Reed and P. W. Dorst, 1932).

[2] In the presence of any organic matter the bichromate is decomposed by exposure to light into neutral chromate—which is eliminated in the later washing—and brown oxide or chromochromate $m\,Cr_2O_3$, $nCrO_3$, which by subsequent washing is decomposed into chromic acid CrO_3, carried away by the water, and into green oxide of chromium Cr_2O_3, which combines with the gelatine and effects the tanning action. In the course of this reaction a very small part of the gelatine is oxidized, resulting in products which are eliminated during the washing. The insoluble image is formed entirely of normal gelatine in combination with chromium oxide (J. M. Eder, 1878). When ammonium bichromate is used, the neutral chromate formed is decomposed in giving up bichromate which can participate in the reaction.

The neutral chromate thus formed can contribute to the insolubilization of the gelatine if the sensitive paper is placed, after exposure to light, in a solution of a metal salt which precipitates on contact with the chromate and not with the bichromate (F. J. Tritton, 1929). The best results have been obtained by replacing the water for wetting by a 2 per cent solution of cerous chloride. The exposure to light can then be reduced to one-third its normal amount. It is evident that any fog, such as may be due to staleness, is intensified in the same proportion. This process is a very delicate operation.

and H. Berczeli, 1936). Alkaline tartrates and lactates produce the opposite effect. A solution of gelatine to which bichromate has been added and which has then kept liquid for some time has its solubility considerably reduced.

Gelatine treated with chromic acid becomes completely insoluble instantly, and even loses its property of swelling in water.[1]

Similar reactions occur with albumin, casein, gum arabic, various natural resins (gum lac dissolved in an alkaline medium), or artificial resins, and a large number of cellulose derivatives, which thus lose by exposure to light the property of swelling or of dissolving in their usual solvents.

637. Chromates and Bichromates. The sensitizing of gelatine for the pigment processes is done by using the bichromate[2] of potassium or ammonium. The deliquescent bichromate of sodium is very difficult to purify, and cannot be used with advantage.[3]

Potassium bichromate ($K_2Cr_2O_7$) occurs in large orange crystals, unaffected by exposure to air, soluble in water to the extent of about 8 per cent at 50° F., and more than 50 per cent at 212°, boiling point. It is insoluble in alcohol, and is precipitated from aqueous solutions when an appreciable proportion of alcohol is added.

Ammonium bichromate ($(NH_4)_2Cr_2O_7$) is in smaller crystals and distinctly redder in colour.[4] It is unaffected by exposure to the air, and is very soluble in water, more than 20 per cent at 60° F., and approximately 100 per cent in boiling water. About three times their volume of alcohol or acetone can be added to aqueous solutions at a concentration of 10 per cent at most without precipitation occurring.

A simple solution of bichromate in water is quite stable. A solution to which organic substances have been added will gradually turn brown if exposed to the air, and can then produce spontaneous insolubility of gelatine.

The addition of strong mineral acids—sulphuric, nitric, etc.—to solutions of bichromate liberates a proportionate quantity of chromic acid. The addition of hydrochloric acid produces a chlorochromate. Acetic acid has no action on bichromates.

The addition of ammonia or a caustic alkali to a solution of bichromate changes the colour gradually from orange to lemon-yellow, by converting the bichromate into a neutral chromate. Inversely, neutral chromates in solution are restored to the condition of bichromates by the addition of acids, even the weakest, e.g. acetic acid and carbonic acid.

Ammonia is frequently added to solutions of the bichromates used for sensitizing gelatine for the pigment process up to the point of forming the neutral chromate. The ammonium chromate thus formed does not induce the insolubilization of the gelatine which results always in bichromated gelatine. On exposure to light the ammonium chromate is first decomposed into ammonia and ammonium bichromate, the sensitiveness being then scarcely inferior to that of gelatine sensitized with bichromate (E. Kopp, 1864). The mixture of chromate and gelatine, when the latter has not been mixed with the pigment, is much lighter in colour than bichromated gelatine. The image of brown oxide, being as dark as with bichromated gelatine, is therefore much more strongly visible, a fact which has led many workers to assume that the addition of ammonia to bichromate solutions produces greater sensitiveness.

638. Physiological Action of Bichromates. The chromates and bichromates are poisonous

[1] This explains why bichromated gelatine, rendered partially insoluble by moderate action of light, becomes less and less soluble if kept for any length of time in a moist atmosphere. Under these conditions the gelatine is coagulated by the chromic acid, formed during the photo-chemical reaction, which is combined loosely with the chromium oxide.

[2] Various methods have been patented (G. Kögel, 1920, etc.) in which the bichromate is applied, after the exposure to light, to a layer of gelatine sensitized by various organic substances of which the products of photochemical reduction reduce the bichromate in its turn. For instance, a paper sensitized with 2 : 7 sodium anthraquinone disulphonate keeps indefinitely in the dark. After exposure to light it is placed in a 2 per cent solution of bichromate, all other operations being effected as with paper sensitized with bichromate.

The possibility has also been suggested of sensitizing colloids by the products of condensation of hardening aldehydes and of diazo compounds. Under the influence of light the aldehyde is liberated and renders insoluble the exposed gelatine (R. Zahn, 1931).

[3] Use is also made, particularly in the photo-mechanical industry, of the sensitization of colloids by pyridine bichromate (G. Maillet, 1934) which in a smaller dose confers a considerably greater rapidity, but decreases the keeping quality of the sensitive coating.

[4] The presence of potassium bichromate in the more costly ammonium bichromate can be easily detected in the following manner: If a small quantity of dry ammonium bichromate is heated in a test tube, it deflagrates before becoming red hot, liberating nitrogen and steam and leaving a light powdery deposit of green oxide of chromium. If this latter is put into water after it has cooled it ought not to produce any discolouration. If the water becomes orange-yellow it indicates the presence of potassium bichromate, this salt not being decomposed even by an intense heat.

compounds, but the colour of their solutions is sufficiently distinctive to prevent their being mistaken for any drinkable liquid.

Contact of any abrasion of the skin with a cold solution of bichromate, of the strength used for sensitizing gelatine in the pigment processes, can produce a painful sore, and possibly a serious ulceration. Any scratch or abrasion ought to be protected by an application of collodion, or by wearing an indiarubber finger stall. In the event of an accidental contact with the solution, copious rinsing should be followed by washing with commercial peroxide of hydrogen, which decomposes the bichromate.

Frequent immersion of the hands in warm solutions of bichromate, even very dilute solutions such as the baths used in dissolving the gelatine which has remained soluble after exposure to light, may be the cause of painful skin eruptions in those who are predisposed to the effects of bichromate. These eruptions are not only troublesome, but generally take a long time to cure. Those who have once suffered from them are far more susceptible afterwards to the poisonous action of the bichromates, and are very liable to a recurrence of the trouble.

In the commercial working of the carbon process, the employment of large tanks of warm water for developing the prints should be avoided, as the bichromate dissolved from a series of prints accumulates. By the use of baths of small size, the risk of skin troubles is almost entirely avoided, as the water is constantly being renewed by the addition of fresh hot water. This renewal may also be effected by a jet of hot water the temperature of which can be regulated as desired. There are various types of heater available, heated by gas or electricity. An amateur, having only a small number of prints to develop, will throw away the water as soon as it becomes discoloured, and renew it as required from a kettle of hot water. The fingers should never be dried after having been immersed in a solution of bichromate without first being rinsed in plain water. After working with a solution of bichromate, the hands and forearms should be scrupulously cleansed with soap and a nail-brush.

The first symptoms of bichromate poisoning are generally shown by irritation between the fingers and on the back of the hands. This is followed by the formation of watery pimples, which increase in number and size and become purulent. The skin then becomes dry, cracks, and peels off in scales. The use of carbolic soap, with a lotion of carbolized glycerine and ointment containing mercuric nitrate, generally produces a rapid improvement. The general use of a carbolic soap may, in addition, be regarded as an efficient safeguard.

639. Transfer of the Film. The first experiments in obtaining photographic prints by means of a film of gelatine, sensitized with

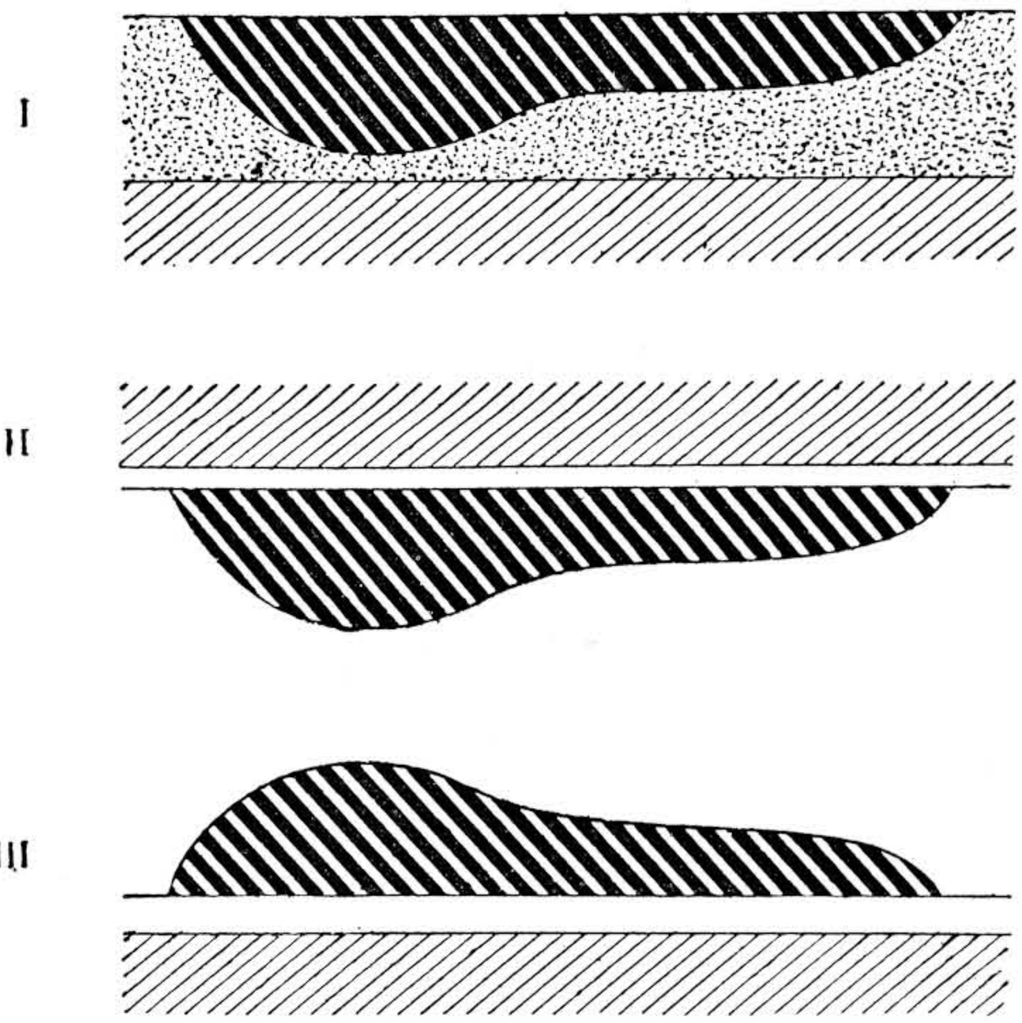

FIG. 185. MECHANISM OF CARBON PRINTING
I, Action of light on the sensitive tissue; II, The print after transfer and development; III, The print after transfer to the final support

bichromate and coloured by the incorporation of carbon in fine powder, and then washing away with warm water the parts which remained soluble after exposure under a negative, yielded satisfactory results for images consisting of white and black only (A. Poitevin, 1855). But failure resulted when attempts were made to obtain images in tones. The explanation of this failure was given in 1858 by the Abbé Laborde.

In the action of light on bichromated gelatine, insolubility commences from the surface which receives the light, and penetrates to a great depth only in those parts where the action of the light is strongest, as in the deep shadows of a negative. Under the half-tones, the insoluble gelatine, represented in Fig. 185 (I) by cross-lining in thick strokes, remains isolated from its support. The support is shown by fine cross-lining, and the intervening film of soluble gelatine by stipple.[1] Even assuming that the gelatine

[1] The scale of this diagram has been considerably exaggerated in a vertical direction. As a rule, the

became insoluble through its entire thickness by prolonged exposure to light under a very transparent part of a negative in such a manner as to ensure that it became adherent to the support, the half-tones would still separate from the supporting paper during the dissolving away of the soluble gelatine.

One method of surmounting this difficulty consists in causing the light to act on the bichromated gelatine through the support, the insoluble gelatine forming in consequence from the surface in contact with the support and remaining adherent to that support during the development. This plan was applied in 1858 by J. C. Burnett to films of bichromated gelatine coated on paper, and in 1861 by Fargier to similar films on a transparent base. These methods have been utilized for different purposes since that time.

The final solution of the problem was achieved in 1864 by J. W. Swan, who devised the plan of transferring the film of bichromated gelatine to a new support before development. This support was a paper coated with unvulcanized india-rubber, on which the print was mounted, the surface which had been directly exposed to light during printing being in contact with the support. In development, by dissolving away the gelatine which has remained soluble, the paper which formed the original support is released, the image remaining attached to the new support (Fig. 185 (II)). The image is thus reversed with regard to left and right, unless the print has been made from a reversed negative, or the correction effected by re-transferring to a gelatinized paper by an operation similar to the usual method of transferring decalcomania pictures (Fig. 185 (III)).

The preparation of the intermediate or temporary support for the double-transfer process and also the manufacture of final supports for the single and double transfer processes, have been successively improved by J. R. Johnson in 1869, J. R. Sawyer in 1874, and others.

640. Preparation of Carbon Tissue. Although papers prepared for carbon printing in various colours and of excellent quality can be obtained commercially from various manufacturers, it is desirable to describe briefly the method of preparation. This work can be carried out without any great difficulty by any amateur who has the requisite time at his disposal. It possesses the advantage that separate sensitizing is unnecessary: the bichromate can be added to the mixtures prepared for coating the paper.

A comparatively porous paper is best, either slightly sized or not sized at all. A plain smooth paper, sold in rolls by manufacturers of wall-papers for use as a lining paper before the pattern paper is put on, answers well for this purpose.

Moist water colours, sold in tubes, are the best, but they are rather costly. Some photographers may therefore prefer to use the dry colours, in powder[1] as fine as possible. They should be ground in a mortar with an equal weight of syrup of glucose.

The gelatine[2] for this process should be very soluble, without, however, any tendency to swell excessively. The soft varieties used for collotype answer perfectly. A small proportion of hard gelatine may be added if it is desired to increase the sensitiveness. The gelatine is put aside to soak for several hours in cold water, and dissolved by means of a water bath. The temperature should not exceed 160° F. Sugar should be added to render the gelatine more supple[3] and then the colour should be mixed with it. After stirring, the mixture is skimmed and filtered through fine fabric; it is then ready for spreading on paper.

The following formula, given as an example, is suitable for obtaining prints or transparencies in black. The quantities are sufficient for coating about 10 sq. ft. of paper if the image is to be viewed by reflected light, or 6 sq. ft. for transparencies to be viewed by transmitted light.[4]

maximum thickness of the insoluble coloured gelatine, measured when dry, does not exceed the 1/160th of an inch (·015 mm.).

[1] Certain pigments, by their action on the bichromate, tend to induce spontaneous insolubility of bichromated gelatine, and should be either avoided entirely or else purified by suitable methods. Some smoke blacks or lamp blacks require cleansing from the greasy matters which they contain, so that they may be thoroughly moistened by aqueous solutions.

[2] Different gelatines behave very differently after sensitization, especially as regards *speed* and *stability*, these differences being due to the character and proportion of the substances other than protein.

[3] Commercial carbon tissue usually contains also a small proportion of soap, about 10 to 15 per cent of the weight of the dry gelatine.

[4] For obtaining relatively strong reliefs for moulding from, bichromated gelatine papers are prepared with as much as 6 oz. of gelatine to 10 sq. ft. of surface. The proportion of pigment to gelatine must then be considerably reduced, but the quantity of colour per square foot should be at least equal to that generally used for normal papers with a thin coating.

We would add, incidentally, that attempts have

Gelatine	$2\frac{1}{4}$ to 3 oz.	(50 to 80 grm.)
Loaf sugar	160 to 320 gr.	(10 to 20 grm.)
Salicyclic acid	4 gr.	(·25 grm.)
Vegetable black	160 gr.	(10 grm.)
Indigo	8 gr.	(·5 grm.)
Carmine	16 gr.	(1 grm.)
Glucose syrup	160 min.	(10 c.c.)
Water	9 oz.	(250 c.c.)

Among different methods which may be adopted for coating small sheets of paper the following presents advantages (E. Felloes, 1920):

A printing frame should be obtained—if in bad condition it will serve its purpose equally well—and some sheets of glass of good quality, a little smaller than the rebate of the frame, so as to allow a little play. The paper having been cut into sheets about $1\frac{1}{4}$ in. to $1\frac{1}{2}$ in. larger than the frame, one of them and one of the sheets of glass are immersed in hot water at about 120° F. The paper is laid on the glass, covered with a sheet of waterproof paper, and squeegeed to remove as much moisture as possible. The edges of the paper are folded back under the glass, which is placed in the printing frame in such a manner that the face of the paper is seen from the front of the frame. Several thicknesses of paper are placed at the back of the glass in the printing frame, the back and springs are closed, and the frame turned face upwards. Then, without loss of time, so as to avoid undue cooling of the paper, the desired quantity of gelatinous mixture is flowed into this "dish" formed by the paper and the edges of the printing frame. The frame is then placed on a level surface until the gelatine is set. As soon as the gelatine is sufficiently firm the frame is turned face down and the back opened; the edges of the paper are attached to the back of the glass by touches of gum; the frame is turned face upwards again and supported by the glass on the extended fingers of the left hand. A sharp knife-blade is passed along the edges of the frame to separate the gelatine from the wood; the glass plate bearing the coated paper is removed and placed on a drying table until the gelatine has become thoroughly dry.

For preparing a ready-sensitized tissue the following should be mixed with the gelatine solution before the colouring matter is added: Potassium bichromate, 60 to 120 gr. (4 to 8 grm.), sodium citrate, 15 gr. (1 grm.), and liquid ammonia should be added until the orange colour changes to lemon yellow.

After drying, the paper should be detached from the glass and kept flat until required for use.

(*b*) Sensitizing and Exposing Carbon Tissue

641. Sensitizing. Carbon tissue which has been kept for long in a dry atmosphere tends to become brittle. There is then a risk of its cracking and splitting during the manipulations prior to sensitizing. In that case it should be kept for some hours in a humid atmosphere. This precaution is specially necessary with paper kept in rolls[1] from which all wrapping papers should be removed to permit the free access of air. Long keeping in a very moist atmosphere tends to produce mildew, and also to cause parts in contact to adhere to each other. When the number of sheets required for the work of several days have been cut, they should be kept flat, under pressure, e.g. between old negatives. The surface of the gelatine ought never to be touched with the fingers; any greasy mark tends to produce a fault. Wearing white cotton gloves avoids infallibly both finger prints and injury by the finger-nails.

642. Sensitizing the carbon tissue can be carried out by immersion in a solution of bichromate, or by brushing the solution on the tissue. This latter method of working is generally used only for spirit sensitizers, of which, consequently, only a very small quantity need be prepared.

The tissue may be sensitized in ordinary daylight, but not in full sunlight.

Dishes of wood, gutta-percha, or plain metal should never be used for the sensitizing bath; they are liable to induce a partial reduction of the bichromate solution.

A solution which has been used for sensitizing is liable to change, especially if exposed to light, and may then cause spontaneous insolubility of the gelatine.

Gelatine is more soluble in a solution of bichromate than in water, and swells to a greater extent. It is therefore generally necessary in

been made to introduce papers with several films in different colours, superimposed, for the production of double tone prints (A. Braun, 1869).

[1] When a roll of carbon tissue has to be cut up into a limited number of sizes, the roll may be cut with a saw; but it is then necessary to remove carefully the small fragments which cling to the edge of each cut.

hot weather to cool the sensitizing bath by the addition of ice; the maximum temperature should be from 55° to 60° F. If the temperature cannot be lowered to this degree, sensitizing should be done by means of a solution in a mixture of water and spirit, applied with a brush; or, alternatively, a certain proportion of spirit should be added to the sensitizing bath. Without this precaution there is a risk ot the gelatine becoming reticulated.

In damp weather, if there is no means of hastening the drying of tissue sensitized by immersion, it is desirable to add to the bath a small quantity of carbolic acid or salicylic acid previously dissolved in a little alcohol, in order to avoid the development of bacteria in the gelatine.

643. The concentration of the bichromate in the sensitizing bath exercises a considerable influence on the sensitiveness of the carbon tissue and the degree of contrast in the resulting prints. A concentrated solution will produce greater rapidity but comparatively weak prints, even when used with vigorous negatives.[1] Bichromated gelatine, yellow or orange, forms, in effect, a non-actinic filter for ultra-violet and violet rays, the only active rays in this method of printing. On a paper sensitized in a concentrated bath the photographic action is restricted to a superficial zone, and it is therefore impossible to obtain vigorous images. This peculiarity of concentrated sensitizing solutions is exaggerated still more when printing is carried out by artificial light rich in ultra-violet rays, such as arc lights on a high voltage, or mercury-vapour tubes (R. B. Fishenden, 1915). On the other hand, sensitizing in dilute solutions yields papers which are much slower, but tends to produce stronger images, even with soft negatives. The sensitizing bath should be much more dilute when a thick film is used, if it is desired to render almost the whole thickness of the film insoluble.

The degree of acidity of the sensitizer also influences speed and contrast. The alkalinization of the sensitizer increases the contrast of the image by decreasing the density of the areas least exposed without affecting to an appreciable extent the heavy densities of the image. A paper sensitized in a very slightly acid bath is faster than a paper sensitized in an alkaline bath, but the more abundant formation of brown dioxide of chromium which strongly absorbs the active light, does not permit this increase in speed to manifest itself in the most exposed areas (H. M. Cartwright and H. Murrell, 1933).

For printing in daylight, the degree of concentration ranges from 1 per cent when using weak negatives to 6 per cent for printing from those with vigorous contrasts. With the former, printing will require from three to four times as long as with the latter. For negatives of normal contrast the strength of the bath[1] should be from 3 to 4 per cent.

To enable the sensitized paper to be kept for some days without special precautions, a little ammonia is often added to the sensitizer (until the orange tint turns to light yellow). At least equal keeping quality without a decrease in speed is ensured by dissolving in the bath, at the same time as the bichromate, the corresponding neutral chromate to an amount equal to about one-fifth the weight of the bichromate.

644. For sensitizing in a dish, the solution should occupy a depth of from $\frac{1}{4}$ in. to 1 in., according to the number of sheets to be sensitized at once. Not more than five should be immersed at one time.

The tissue to be sensitized should be immersed face downwards.[2] To effect the immersion, the sheet should be taken by two opposite corners and caused to slide into the solution. As soon as the sheet of tissue has become slightly limp it should be turned face upwards, and any adhering air-bells should be broken either with a brush or a plug of cotton wool. It should be quickly turned again, face downwards, and any air-bells on the back of the paper similarly removed.[3]

[1] Tissues in strong colours, which tend to give prints with excessive contrasts, should be sensitized in somewhat stronger baths than the average. Brown and sepia, which tend to yield softer results, should, on the contrary, be sensitized in solutions a little less concentrated than for black tissues.

[1] If it is accepted that gelatine absorbs on an average 10 times its weight of water during sensitization, the concentration of bichromate in the dry gelatine is 10 times that of the bichromate in the sensitizing bath. As gelatine swells more in a tepid bath than in a cold one, the quantity of bichromate absorbed by the gelatine is equivalent to that which, at an intermediate temperature, would have been absorbed by a more concentrated or more dilute bath.

[2] Attempts have been made occasionally to take advantage of the slight differences in sensitized tissue which result from varied methods of working. A sheet may be completely immersed in the bath, it may be floated with its face in contact with the solution, or it may be floated with its back in contact. By reason of the differences in sensitiveness at various depths of the film, slightly softer images are produced in the first case and slightly more vigorous in the last.

[3] Air bells may also be removed by passing, first over the sheet and then under it, some form of bow having a stretched copper wire attached.

The sheet of tissue must not be withdrawn from the sensitizing bath until it has become thoroughly limp[1] and perfectly flat. This should require from 2 to 3 minutes. Too short an immersion will yield a tissue only slightly sensitive; while a prolonged immersion, during which the gelatine becomes considerably swollen, will lengthen materially the time necessary for drying. In commercial establishments the period of sensitizing is usually kept the same, and is timed by a sand-glass.

To withdraw the tissue, the back of the sheet should be drawn over the edge of the dish so as to remove as much of the sensitizing fluid as possible. In every case, and particularly with large sheets, when drying is slow and there is a risk of inducing partial insolubility in the parts which occupy the longest time in drying, it is desirable to remove almost all of the liquid from the surface of the gelatine. For this, the tissue should be placed face downwards on a perfectly clean sheet of glass, and the liquid rapidly expelled by strokes of a squeegee, using moderate pressure. Tissue thus treated can be subjected to a higher temperature during drying without any risk of melting.

When it is desired to reproduce images of extreme delicacy, particularly when the carbon print is intended to be used as a resist for the etching fluid in certain photo-mechanical processes, the sensitive tissue is kept on the glass until dry.[2]

645. Sensitizing by brushing the solution on the tissue may be recommended in case of urgency, or if there is reason to fear veiling by spontaneous insolubility through drying at high temperatures. A solution of ammonium bichromate is prepared of three times the strength required. This should be neutralized by ammonia if the sensitive tissue is to be kept. Twice its volume of methylic spirit, or, better, industrial (denatured) spirit, should then be added.[3] This mixture may be prepared long enough in advance to obtain a clear solution by decantation. It must be kept in the dark, or, at least, protected from daylight.

[1] Sensitizing baths to which has been added about 20 per cent of their volume of industrial (denatured) spirit do not soften the gelatine. The immersion then ought to be about four minutes to allow the tissue to become flat.

[2] It has been proposed to prepare carbon tissue on an opaque support, which, being applied to yellow glass or ebonite, could be dried in full daylight.

[3] Acetone, the use of which has been proposed for the same purpose, has a very disagreeable odour, and often produces sick headaches.

The sheet of tissue to be sensitized is laid face uppermost on a sheet of glass or card to which it is attached at the corners by wooden clips. The solution is applied by means of a brush or a plug of cotton-wool; the strokes of the brush must be made to cross in each direction, so as to avoid any irregularity in impregnation.

646. Drying the Sensitized Tissue. The drying of sensitized carbon tissue should be carried out in a room—or in a box or cupboard—where daylight cannot enter, but where fresh, cool air can be constantly renewed. In addition, if tissue is dried with its face exposed to the air, precautions must be adopted to prevent dust being deposited on the gelatine.

Even in unfavourable conditions, tissue sensitized by brushing with a strong alcoholic solution may be thoroughly dried in about half an hour. But tissue sensitized by immersion in a plain aqueous solution may require a long time, especially if it has not been squeegeed to remove adherent solution. It is desirable in that case to arrange that a current of air should circulate through the drying cupboard to ensure drying in 4 hours at the most. If drying takes longer than this, veiling will probably result from spontaneous insolubilization.

In some commercial establishments, where the tissue is kept on the glass to which it has been squeegeed until it is dry, drying cupboards are used in which the glasses are arranged horizontally on brackets or shelves, and are traversed by a current of air. The air is provided by a centrifugal pump and is cooled by circulating round a metal container, filled with ice or a freezing mixture, on the sides of which it deposits the greater part of any moisture which it may contain. If the glasses are arranged vertically in the drying cupboard, the current of air should be admitted only after draining for about 20 minutes in a free draught. In any case the current of air should reach its full speed only after progressive stages with fairly wide intervals in order to avoid partial detachment.

A frequent practice is to support small sheets, on lines by means of wooden clips. Sheets in large sizes are placed over a semi-cylindrical grid, about 8 to 12 in. in diameter, mounted on legs or suspended by cords.

The drying cupboard ought to be somewhat cool at first, though the temperature may be raised slightly towards the end of the drying. It is necessary to avoid either paraffin or gas stoves for warming the air. The products

of combustion would partially insolubilize the moist bichromated gelatine. The same result will arise if any bad emanations from acetylene, drains, etc., can enter the drying cupboard.

Drying is completed when the gelatine film has become *almost* brittle.

647. Keeping the Sensitized Tissue. In dry weather, when not too warm, carbon tissue, sensitized in a bath of moderate strength neutralized by ammonia, or with neutral chromate added, can be kept without any special precautions for four or five days before spantaneous insolubility of the gelatine becomes at all serious. This time is considerably shortened if the tissue has been sensitized in a concentrated solution without any precaution for neutralizing the chromic acid. Insolubility also occurs more quickly if drying has been very slow or if the tissue is kept in a damp, warm atmosphere. Spontaneous insolubilization can be retarded and the time of keeping in good condition extended to about ten days if the sensitizing bath contains about 1 per cent of neutral sodium citrate or potassium citrate (§ 636).

The preservation of the sensitized tissue is almost unlimited in a thoroughly dry atmosphere.[1] For example, it may be kept in a metal tube containing drying compounds and closed by adhesive tape or an indiarubber band (§ 281). But as the gelatine is thereby rendered very brittle and almost insensitive, the sheets should be kept for several hours in a moist atmosphere before being unrolled and used.

Although good keeping qualities for any length of time can only be ensured in a dry atmosphere, sheets of carbon tissue may be kept after sensitizing for a time, if they are put in a printing frame, under pressure. They should be perfectly dry and covered with a sheet of indiarubber or moleskin before the back of the frame is closed.

648. Preparation of the Negatives. For carbon printing vigorous negatives, without undue harshness, are desirable, especially for first attempts. Those suitable for print-out papers, gelatino-chloride or collodion, answer well.

According as the single or double transfer is adopted, negatives must be either reversed or normal.[2] Negatives may be reversed by stripping the film, or they may be made reversed in the first instance by fitting a reversing prism or mirror to the lens. Film negatives can be printed from the back by being reversed in the printing frame, and so allow single transfer, but it is then necessary to employ for printing a compact source of light of small size. The light must also be at some distance from the frame and kept free from movement during the printing.

Under similar conditions, glass negatives can be printed from in the same manner if an arc light of low power is employed, about 5 amperes.[1]

A margin at least $\frac{3}{16}$ in. wide must be protected against the action of the light all round the edges of the tissue, by means of a mask (*safe-edge*) suitably attached to the negative. Without this precaution it is impossible to ensure the adherence of the pigmented gelatine to the support to which it is transferred for development, whether it is the final support for single transfer or the temporary support for double transfer. The carbon tissue must be cut[2] to such sizes that the margins are completely covered by the safe-edge. The gelatine will then remain perfectly permeable and soluble in the parts protected by the safe-edge from the action of light. The size to which the carbon tissue is cut, including the margins protected by the safe-edge, must not exceed the dimensions of the support on which it is to be mounted for development.[3]

[1] Sensitized carbon tissue has been kept for three months without change at the temperature of 27° F. (O. Watter, 1935).

[2] Carbon tissue formed of a film of opaque white pigment has been used for printing under a positive, being then transferred to a dark support, e.g. black paper, lacquered wood, japanned metal, etc. When the carbon process is used for obtaining transparencies, the single transfer method can be used after printing from a normal negative, subject to rectification of the image in regard to right and left. A picture on glass, produced by single transfer, can be backed with a suitable paper, white, tinted, or metallic, attached to the image by a thin solution of gelatine, or a backing of silk stretched over a thick card may be substituted, and the print will be correct, i.e. not reversed, when seen from the face of the glass.

[1] In this case the image will be sharper if the carbons are replaced by small rods of iron about $\frac{3}{16}$ in. diameter, the arc being struck with a carbon, as the two iron rods would probably be welded together if they came into contact, as usually done for an arc between the carbons. It is necessary to protect the eyes from the very dangerous light of such an arc; yellow glasses, which absorb the ultra-violet rays, must be used.

[2] The tissue should be cut with clean edges; there is a risk of defective adherence to the support during development if the tissue is torn or cut with a paper-knife.

[3] The gelatine being incompletely swollen by the water, especially in its lower layers, when it is applied to its new support, and the water imprisoned between this support and the gelatine being immediately expelled by a squeegee or a roller, the less saturated lower

Although the safe-edge may, if necessary, be applied to the glass side of the negative, it is preferable, as a rule, that it should be on the film. If on the glass, it must be sufficiently wide to protect the bichromated gelatine beyond the range of the semi-shadow of the light penetrating under the safe-edge. When on the film the safe-edge may be formed of strips of black paper, or a cut-out mask, or by a margin of black varnish or opaque water-colour. The outlines may be drawn with a draughtsman's ruling pen with large rounded blades, the varnish being then applied with a brush beyond these outlines.

649. Exposure to Light. The various manipulations in carbon printing may be carried out in very subdued daylight, by daylight coming through yellow windows, or by artificial light not screened in any way.

No visible image is produced by exposure of the pigmented film to light; the exposure must therefore be determined by means of an actinometer or light integrator (§ 508). The exposure may also be determined by the fact that, all other conditions being equal, the time necessary for obtaining a print on black carbon tissue will be approximately equal to the time of printing on gelatino-chloride print-out paper. This latter should only be carried up to the point at which the print appears as when finished, without making any allowance for loss of depth in toning and fixing.

The sensitiveness of carbon tissue depends on a number of factors. They are: the colour of the pigment and its proportion in relation to the gelatine; the strength of the solution of bichromate used for sensitizing; and also the temperature during exposure. While it is not possible to lay down exact rules, it may be said that, as a rule, the exposure should be longer if the gelatine is very soluble. The spontaneous insolubility of the gelatine by long keeping produces an *apparent* increase of sensitiveness. The exposure to light must also be longer if the proportion of pigment is low, if the sensitizing has been carried out in a very dilute solution, and also if the temperature is very low. The time of printing is generally shorter with blue or violet tissue than with black; it should, on the contrary, be longer with brown or red tissue, and up to three times more for red chalk. In addition, the printing should be curtailed if the development is to be deferred; the insolubilization of the image increases, even in darkness (§ 636, footnote). It should be recognized, however, that this "continuing action" does not give uniform results.

650. Printing by daylight is preferably done in the shade or in diffused light. When the printing frames are exposed out of doors in damp weather the carbon tissue should be protected against access of moisture by being covered with a sheet of india-rubber or moleskin. In the absence of this precaution the felt pads which are used to ensure uniform pressure should be thoroughly dried so as to avoid unequal dampness and consequent irregularity in the prints.[1]

It may be said that, as a general rule, printing on carbon tissue by artificial light lessens the contrasts in the print, all other conditions remaining equal. This reduction in contrast is specially marked when arc lamps on a high voltage are employed, as their light is very rich in ultra-violet rays (§ 643). For example, the same degree of contrast can be obtained on tissue sensitized on a 5 per cent solution and printed by daylight, and on tissue sensitized on a 1·5 per cent solution and printed by an enclosed arc of 220 volts, 12 amperes.

Mercury-vapour lamps give very satisfactory results in carbon printing if the strength of the sensitizing solution is suitably adjusted. With these lamps the heating of the frames, which is considerable with arc lamps, is avoided. This heating tends to produce a veiling of the print. When ordinary arc lights are used very near the prints, it is desirable to cool the frames by means of a ventilating fan.[2]

layers of the gelatine draw the water from the fully saturated and swollen upper layers in contact with the new support. This suction produces a partial vacuum between the gelatine and its new support similar to that produced by a vacuum pump. The support must be impervious to air and water, so that atmospheric pressure will ensure perfect adhesion. A necessary condition is that it must be impossible for air to penetrate between the gelatine and its new support. This condition is ensured by the marginal zone, in which the gelatine has preserved its power of adhesion. The adhesiveness could not be ensured if the safe-edge were omitted, or if the gelatine had become insoluble through being kept too long in a moist atmosphere.

[1] In commercial printing establishments, printing by daylight is generally carried out under a glass roof. Frames containing negatives which require the same time for printing are grouped together on small trucks, which are brought for re-charging to an extending table in an inner room illuminated by yellow light.

[2] Prints have been obtained in from 2 to 3 minutes with the light of incandescent lamps by the following procedure: a 7 × 5 printing frame was placed horizontally below 4 lamps of 500 watts each, inside a tunnel traversed by a powerful current of air directed to the cupboard for drying the sensitized tissue (F. Flodin, 1933).

651. In order to obviate any uncertainty, it is desirable that the number of tints of the actinometer[1] should be marked either on the negative itself or on the list of negatives (§ 489). A note should also be made of the strength of the bichromate solution which gives the best rendering of each negative with a particular colour of carbon tissue.

When taking the first print from a non-calibrated negative (§ 511), it is desirable to compare it with other negatives from which good results have been obtained under known conditions. By making this comparison it is easy to judge the working conditions which will yield good results with the negative in use.

(*c*) Development of Tissue by Single Transfer

652. Choice of Support. According to the purpose for which they are intended, carbon prints made for viewing by reflected light may be transferred and developed on paper, on opal glass, on metal, and generally on any support which can resist the action of warm water.

Matt opal glass needs no preparation beyond a thorough cleaning by means of soap and a brush so as to remove all traces of grease.

Glass, porcelain, and metal should preferably receive a thin coating of bichromated gelatine. After drying, this should receive a long exposure to daylight to ensure complete insolubility.[2] A 3 per cent solution of gelatine, to which is added, at the time of using, 0·1 per cent of potassium bichromate, may be used for this substratum. The warm solution should be flowed on ordinary or plate-glass in the manner already described for varnishing negatives (§ 479). The excess is drained off, and the gelatinized plates are dried free from dust. After an exposure of about two hours to daylight, the gelatinized supports are ready for use.

Substances like ivory,[3] which are liable to be permanently stained by the bichromate, should be prepared with a solution of gelatine hardened with alum. To a 5 per cent solution of gelatine is added 0·5 per cent of common alum; this coating becomes insoluble automatically during drying.

Various papers sized with gelatine, or even some heavily baryta-coated papers for collotype printing, etc., can be used as supports for the carbon print by hardening the gelatine with which they are sized or coated. Such papers should be immersed in a 5 per cent solution of chrome alum for 2 to 3 minutes, and then put aside to dry.

It is generally desirable to use the papers specially prepared for single transfer by the manufacturers of materials for carbon printing, or else to gelatinize papers of more varied character, smooth, glossy, grained, tinted, or even with metallic surfaces.[1]

For the preparation of single-transfer papers, the paper chosen is floated on a warm solution of gelatine to which alum has been added. Or, alternatively, after having very slightly moistened the paper with warm water, the gelatine may be applied by means of a large brush. A warm solution of photographic gelatine, of strength of about 5 per cent, should be used, addition being made at the time of use of 1 per cent of chrome alum. This yields a glossy transfer paper, and more glossy in proportion to the thickness of the gelatine coating. For obtaining a matt coating it is necessary to emulsify in the gelatine-alum solution raw starch previously mixed in water to produce a kind of "milk."

653. Transfer. Single-transfer papers should be cut a little larger than the carbon tissue which is to be transferred to them. They are immersed in cold water for 5 to 10 minutes in the case of thin papers, or for 2 to 3 hours for thick and rough papers. With the latter it is frequently advantageous to place the paper in warm water a short time before transferring the print, replacing it in cold water before the exposed tissue is applied to it.

Gelatinized rigid supports should be soaked in cold water for 5 to 10 minutes.

The best temperature of the water for transferring is 60° F.; if air-bells have been formed by the flow of water into the tank, the carbon

until the bichromate is completely eliminated. The washed print is then put to dry before it is to be transferred.

[1] When the prints are made by artificial light, on an electric main on which the voltage only varies slightly, it is sufficient to indicate the best time of exposure at a given distance from the source of light.

[2] The gelatine may be replaced by a film of coagulated albumen or coagulated caseine, a film of collodion, etc. It is even practicable to dispense with any preparation other than a scrupulous cleaning. This is the practice in the transfer of the carbon image to a sheet or cylinder of copper to form the resist for a photogravure plate.

[3] A necessary precaution in the case of ivory and all other substances from which the bichromate could not be removed consists in washing the carbon print in several changes of water directly it is taken from the printing frame. This washing must be continued

[1] Very happy effects may be obtained on papers with a metallic coating, particularly in photographs of gold or silverware.

print should not be immersed in the water until they have dispersed.[1]

Some minutes before the expiration of the time of soaking the paper, the carbon print to be transferred should be placed in the same dish, face downwards. It should be turned over for sufficient time to remove any air-bells that may adhere to the surface, and turned face downward again. Since the paper absorbs moisture more quickly than the gelatine, the print curls, the gelatine face becoming concave. After a few moments, the gelatine continuing to absorb water, the print straightens out, and by prolonging the soaking, the gelatine face would become convex. The exact moment when the carbon print becomes flat is the point at which it should be applied, *under the water*, to the prepared surface of the support.[2] The print and transfer paper are withdrawn together, quickly; they are placed on a sheet of thick glass or marble on a table, tissue uppermost, covered with a sheet of rubber or moleskin, and the intervening liquid expelled by moderate pressure with the squeegee, the strokes being made from the centre towards the edges. In the case of thick or rough papers it is desirable to finish the squeegeeing into contact by removing the rubber sheet and working the squeegee direct on the back of the paper.

[1] If the ambient temperature is appreciably higher than that of the mains supply, it is well to allow the water to reach the air temperature in order to avoid the appearance of numerous microscopic air bubbles due to the liberation of the dissolved air.

[2] The successive wettings and dryings of the papers, the carbon tissue as well as the single-transfer paper, produce alternately expansions and contractions of the image, at right angles to the fibres of each of the papers. In order to compensate for these deformations, it is well to arrange so that the various papers used expand in the same direction. Machine-made papers always expand across the sheet or roll, and not in the direction of their length. Hand-made papers expand equally in each direction.

To avoid with certainty the expansion and contraction of the print transferred to a rigid support the method known in photogravure work as "dry laying" may be utilized, in which the paper is wetted on its gelatine surface only, and only at the instant of its contact with the support. The support is placed on a slightly sloping table and the carbon paper is laid on it face downwards. A rubber roller is passed over the paper until the lower edge is reached. There, by means of adhesive tape, a strip of the paper about $\frac{3}{5}$ in. wide along the edge is fixed to the support. The paper is then rolled up, with the pigment layer outwards, until it touches the roller. It is held against the roller which is then slowly moved over the support which is sprayed with a jet of water. The paper unrolls and, at one and the same time, is wetted and pressed into contact (C. Rauch, 1936).

After squeegeeing into contact, the carbon print on its support should be placed between blotting boards for about 15 to 20 minutes in the case of thin transfer papers, or 30 minutes when thick or rough papers are used. During this time they should be kept between thick pieces of glass, loaded with weights. There is, however, no objection to keeping the prints between the blotting boards in this manner for a longer time, provided that they do not become too dry. A carbon print which has been soaking too long before being applied to its support will not adhere. A print insufficiently soaked will only adhere in parts, the suction inducing air to penetrate between the film of gelatine and its new support.

654. Development. The carbon print loses its sensitiveness to light entirely as soon as it is wetted for transferring. Consequently, development can be carried out in full daylight as freely as desired; this is almost a necessity, in order that the operation may be thoroughly under control.

The finest details in the light tones are very much better preserved when development is carried out at a low temperature.

The transfer papers with the carbon prints adhering to them are immersed one by one in water at about 95° F., the carbon print uppermost.[1] The print is readily recognized, as it is smaller than the transfer paper. The water should fill the developing tank to a depth of $1\frac{1}{2}$ in. to 2 in. A large number of prints should not be developed at the same time; there is a serious risk of injury through one print rubbing against another.

After a few moments, a little of the coloured gelatine from the margin protected by the safe-edge begins to ooze out from the junction of the carbon print and its support. The temperature of the water may now be gradually raised to about 105° F., and then the paper which formed the original support of the print should be gently lifted and drawn away from the support to which the image has been

[1] Prints on rigid supports can be immersed in the warm water with the print downwards if small blocks of lead are arranged in the tank so that the supports can rest on them without their coming into contact with the print itself. The original paper support will leave the print automatically, and development will proceed without attention. It can be well advanced before the support is turned face upwards for finishing development by pouring water over the print. Development of prints on rigid supports may also be carried out in grooved vertical tanks, or in separate frames used in vertical tanks.

transferred. The original paper can be thrown away. If the paper will not come away easily, wait for about a minute longer, and then, if the paper still offers resistance, raise the temperature of the water to about 112° F. by pouring very hot water, a little at a time, into a corner of the tank, sufficiently far from the prints to avoid injury, mixing it rapidly with the water already in the tank.

When the backing paper is first removed from the print, the image is scarcely visible; it is covered by the greater part of the excess of pigmented gelatine. The print should be turned face downwards to facilitate dissolving away the excess of gelatine, and turned face upwards from time to time to allow the progress of development to be seen.

For development, the print is placed face upwards on a sheet of glass or zinc, somewhat larger than the print. This should be laid on one of the sides of the sink and the bottom of the developing dish, and then warm water should be poured from a jug on to the upper part of the glass or zinc plate, above the print, in such a manner that the water flows in a sheet over the print and draws away the last particles of coloured gelatine.

Development is completed when there are no longer any coloured drainings either on the light tones of the prints or on the lower margin of the print when it is held vertically. The strength of the image increases slightly in drying; the print should, consequently, be a little less vigorous than desired when finished.

The development of a correctly-exposed print requires, as a rule, from two to ten minutes.

If a print is too light it is a sign of either insufficient exposure or the use of water at too high a temperature during development. If other prints have been taken under identical conditions, development should be tried at a lower temperature.

If a print is too dark it indicates either printing for too long a time, or that the tissue is veiled, or that the water used for developing has been too cool. Development should be continued in hotter water, raising the temperature gradually, but without exceeding 140°F. Beyond this temperature blisters are sure to appear as well as a general reticulation of the gelatine.

Attempts may be made to rectify considerable over-exposure of the print by adding to the water small quantities of ammonia or of an alkaline carbonate. Very small traces of eau de Javelle[1] may also be added. Further, the print may be placed for a few moments in a dilute solution of ammonium persulphate, which re-oxidizes to the condition of chromic acid—which is eliminated in water—the chromium oxide which causes insolubility of the gelatine (R. Namias, 1899). A 2 per cent solution of ammonium persulphate, acidified with a little sulphuric acid, should be used.

It is also practicable, to a certain extent, to lighten the print locally and brighten up the high-lights, especially the margins, by lightly rubbing with a tuft of cotton-wool or a soft brush, or by the local applications of warm water.

When development is completed, the print should be rinsed in cold water, being preferably immersed face downwards. Then it should be placed in a solution of common alum, of about 5 per cent strength, until the last traces of bichromate have disappeared. The bichromate is removed by alum far more readily than by plain water. If blisters appear in this bath it may be omitted; the residue of the bichromate can be removed by washing in water to which a very small quantity of sodium bisulphite has been added. The work is completed by washing for a few minutes in running water, or water frequently renewed. The prints should then be dried spontaneously, by being hung up on lines, care being taken to avoid touching the image, which is very tender and fragile, until it has been dried.

655. Transparencies and Positives. In addition to the advantage of producing permanent transparencies in any desired colour, determined in advance, the carbon process possesses the invaluable property of a long scale of gradation, and, almost throughout the entire length of this scale, a remarkable fidelity of rendering. The characteristic curve (§ 202) is practically a straight line, of which the inclination is always below unity excepting when the sensitizing bath is reduced in strength to 0·5 per cent of bichromate (A. Schuller, 1913). The contrasts are slightly increased when the sensitizing bath has been neutralized by the addition of ammonia.

This property, in which the carbon process is unique, renders it specially valuable for making

[1] It should be recorded that it has been proposed to develop carbon prints in cold water by adding ferments or bacteriological cultures (L. Jacobson, 1908), alcoholic solutions of ammonium sulphocyanide (F. Dogilbert, 1914), dilute aqueous solutions of eau de Javelle (Simpson, 1868), etc.

positives. It was formerly a rule with photographic publishers to keep a carbon transparency of every negative of value. From this transparency it was possible, in case of any accident happening to the original, to make a new negative by the same carbon process, strengthening the images at each stage of the work, if necessary, for proportionally increasing the contrasts.

Carbon tissues specially prepared for transparencies are generally richer in pigment, and the colour is more finely ground. Excellent transparencies may be obtained, however, by using the ordinary carbon tissues.

To facilitate the action of the light to the greatest depth, it is desirable to reduce the strength of the sensitizing bath to about 1 or 1½ per cent of bichromate, and to add ammonia until the yellow colour is reached. Printing should be done in daylight.

Glass for transparencies should be carefully selected, free from defects, and as thin as possible, if the transparencies are intended for the stereoscope or for projection in the lantern.

When it is desired to intensify the transparencies or to modify their colour, the substratum must be impermeable to water. For example, a solution of india-rubber in benzole may be used. It may be prepared by diluting the commercial paste (used for repairing pneumatic tyres) down to the consistency of a thin syrup.

The manipulations are the same as those already described in the preceding paragraphs. The control of the development of the image will be facilitated if the transparency is held over a white surface uniformly illuminated. A sheet of opal, enamelled iron, tiling, pottery ware, paper, etc., will answer well.[1]

656. Intensification and Toning of Images on an Impervious Support. Carbon prints or transparencies transferred to plain opal or to glass prepared with a solution of india-rubber can be strengthened by precipitating an insoluble salt in the image. The most simple method consists in immersing the print in a neutral solution of potass. permanganate, which deposits brown hydrated manganese dioxide in the gelatine. The stronger the solution of permanganate, or the longer it is allowed to act, the greater will be the deposit. After the strengthening, a brief rinsing is all that is necessary. Should the intensification be too great, the image can be restored to its original condition by immersion in a very dilute solution of sodium bisulphite.

Black sulphide of lead, prussian blue, etc., can also be formed in the image by immersing it in a very dilute solution of lead nitrate or potassium ferrocyanide, and then, after a slight rinsing, in a dilute solution of sodium monosulphide or ferric chloride, followed by a very thorough washing.

The film may also be stained uniformly by one of the acid dyes previously described for the staining of prints produced by the silver processes.

Intensification by means of permanganate can be carried out with prints made by double transfer while they are on the temporary support.

(*d*) Development of Tissue by Double Transfer

657. Preparation of the Temporary Support. A carbon print can be transferred, for development, to a large variety of temporary supports, from which it can be transferred, when finished, to its final support. According as the surface of the temporary support is glossy or matt, the finished print will possess either a glossy or a matt surface.

Among others, the following may be used as temporary supports: Opal, glass, zinc, aluminium, and enamelled iron, all of which may be polished or matt; and also celluloid, sheet india-rubber (hospital sheeting), and varnished paper.[1]

Rigid temporary supports can only be used

[1] A transparency or positive may, if required, be kept in the form of a loose film by adopting the following procedure. A sheet of plate glass should be polished with powdered talc and coated with tough collodion—collodion consisting of 2 per cent of nitrate of cellulose in a mixture of equal parts of alcohol and ether, to which has been added 1½ per cent of castor oil. This should be allowed to dry for about an hour. The carbon print is transferred to the collodionized surface, developed, washed, and dried. The glass should then be carefully levelled by means of wedges, and coated with a 10 per cent solution of gelatine to which has been added about 3 dr. of glycerine to 20 oz. of solution (20 c.c. per litre). When the gelatine has set, the plate is placed in a vertical position to complete the drying. When thoroughly dry, the film is cut through to the glass; a corner should be raised gently, and the film separated from the glass.

[1] Zinc oxidizes very readily if it is allowed to dry spontaneously. Pigmented papers with either a white or very light coloured film should be preferably transferred to sheets of ebonite so that the strength of the image can be more easily judged. The method of preparing temporary paper supports is not given, as they are readily obtained commercially; hospital sheeting can always be substituted.

when the final transfer of the image is made on a flexible support.[1]

The special papers don't require cleaning.

The temporary support, whatever it may be, must be coated with a film that will ensure adhesion of the pigmented gelatine during development. But this adhesion must be less than that of the image to the film of unhardened gelatine with which the final support is coated. These conditions are fulfilled by employing a mixture of wax and colophany, obtained by mixing the two following solutions, prepared cold—[2]

A	Turpentine . . .	9 oz. (250 c.c.)
	Colophany . . .	540 gr. (35 grm.)
B	Benzine (crystallizable)	27 oz. (750 c.c.)
	Yellow beeswax . .	310 gr. (20 grm.)

The light encaustic solution thus obtained should be kept in a well-corked bottle. A small quantity for regular use may be kept in a dropping bottle.

The glass or opal must be cleaned with a hot lye (a strong solution of washing soda), rinsed freely in plenty of water, dried at once, and polished with a fine fabric moistened with methylated spirit.

Zinc and aluminium should be cleaned thoroughly with a paste of whitening and water, then placed for a few minutes in a 2 per cent solution of hydrochloric acid and rinsed in plain water. They should then be dried rapidly, either near a fire or in a quick current of air; or they may be dried by means of a cardboard fan.

Celluloid and india-rubber sheeting should be cleaned with water containing a small proportion of ammonia, then rinsed in plain water and dried with a thoroughly clean, fine fabric.

A few drops of the waxing solution should be poured on to the temporary support selected, and spread uniformly with a tuft of flannel. A second tuft of flannel should be used to equalize the coating by rubbing with a circular motion, the circles crossing and re-crossing as in polishing. It should be left for about an hour to permit the solvents to evaporate completely.

[1] The use of a flexible temporary support is also necessary when the image is to be finally transferred to a thick rough paper.

[2] The wax may be melted; after extinguishing the flame pour the melted wax into the benzine.

When any other support than the papers specially prepared is used for the first time, it is desirable to wax it several times. This ensures that the mixture of wax and resin covers the entire surface, including the depth of the grain.

After use, the temporary supports should be stored where they are quite free from dust. They can be used many times in succession without any other preparation than the application of a very thin coating of the waxing solution each time that they are used.

658. Transfer on Temporary Supports. Paper temporary supports must be softened by being immersed in cold water for 10 minutes before the carbon print is squeegeed into contact. This time must be increased to about 30 minutes if the back of the paper has been rendered impervious by either wax or varnish.

Supports which are completely impervious need only be immersed in water at the moment of bringing the carbon print into contact with them.

The transfer is effected under conditions identical with those already described for applying prints to their support in the single transfer process (§ 653).

659. Development. On account of the presence of the film of wax on the temporary support, development cannot be carried out at such a high temperature when the print has been overexposed as in the case of a print finished by single transfer. It is, moreover, for the purpose of raising the melting-point of the wax that such a large proportion of resin is added to the waxing solution.[1]

With the exception of this point, the development of prints on a temporary support is carried out in exactly the same manner as previously described (§ 654) for the development of prints by single transfer.

In the event of a separation of the gelatine film from its support during development, it is well to place it immediately in an alum bath. After a few minutes the print may be quickly rinsed and put aside to dry. The development

[1] This limitation of the temperature does not apply when a paper coated with a thin film of unvulcanized rubber is used as the temporary support. It is, however, necessary, when the adhesion of the developed image with the gelatinized final support has been secured, to moisten the back of the temporary support with benzine in order that the print may be separated from it. In addition, the image itself must be cleansed with benzine in order to remove the fragments of rubber which adhere to it.

may be continued, if necessary, after thoroughly drying.

Washing and the dipping in the alum bath may be slightly shortened, the bichromate being unable to penetrate the temporary support.

Excepting when prints are very urgently required, it is desirable that they should be allowed to dry on the temporary support, after the alum bath and washing, before being transferred. The gelatine which forms the image then possesses greater resistance, and is not so liable to be torn or spread under the pressure of the squeegee when being transferred to the final support. In addition, the relief of the image being considerably less, contact between the half-tones and the gelatine of the final support is more easily ensured; these half-tones form depressions in relation to the shadows. Retouching and spotting can also be done before the final transfer, and they are then practically invisible.

Drying should take place at the temperature of the surrounding air, care being taken to prevent the rays of the sun from reaching the print.

660. Preparation of the Final Support. Double transfer papers of various kinds, thicknesses, and textures are obtainable commercially. They are coated with a thin film of gelatine, not hardened, and meet practically all usual requirements.

All papers of good quality, provided that they do not change by exposure to light or air, can be utilized as final supports. They must be coated on one face with a solution of gelatine to which a very small proportion of alum, and, at discretion, a very small quantity of glycerine, have been added. The object of the glycerine is to render the gelatinized paper flexible after drying; it is almost completely removed in the soaking of the support preceding the final transfer.[1]

All other supports on which it is proposed to transfer the image finally must be coated with a solution of gelatine. The solution should be about 6 per cent strength, and it should contain from 9 to 18 gr. of common alum to each 20 oz. of solution (1 to 2 grm. per litre). This preparation is specially necessary for opal glass, porcelain, ivory, celluloid, or wood. Wood should have the surface made perfectly matt with glass-paper. Before coating canvas prepared for painting, it is necessary to pumice-stone the prepared surface, wash it with a solution of soda to remove any grease, rinse it, and then apply two coatings of gelatine. It should not be stretched on a frame until after the final transfer of the image.

661. Final Transfer. The double-transfer paper should be cut rather larger than the actual size of the image, but smaller than the temporary support.[1]

About half-an-hour before the final transfer —an hour for thick papers—the double-transfer paper should be softened by being immersed for a few moments in warm water. The temperature should be from 85° to 95° F., excepting in the case of paper that has been kept a long time, or paper of which the gelatine coating contains a large proportion of alum, when it may be from 104° to 112° F. The paper should then be placed in cold water, in which the gelatine will continue to swell. A few minutes before transferring, the temporary support containing the image is also immersed so that the gelatine may absorb water. The gelatinized surface of the final support is then brought into contact with the image,[2] care being taken to avoid air-bells forming between them. The temporary support with the final support clinging to it are brought out of the water together, placed in a firm position on a marble slab or a table, covered with a sheet of india-rubber, and the greater part of the water expelled by light strokes of the squeegee. The sheet of india-rubber should be lifted for a moment to ascertain if the final support is in the correct position. This verification can be made by transmitted light if the two supports are translucent. The remaining water is then expelled by somewhat firmer strokes of the squeegee, and the print put to dry spontaneously. If the two supports are flexible, hanging from a line is the preferable

[1] Instead of coating paper with gelatine in advance to form the final support, it may be soaked in water until thoroughly soft, and then, at the time of applying it to the temporary support, immersed in hot water and then floated for a few moments on a warm solution of gelatine. This solution should have a strength of about 1 oz. of gelatine, and about 9 gr. of common alum in 20 oz. of water. The paper must be brought at once into contact with the moist image, and the excess of gelatine rapidly expelled by the squeegee before it has had time to set.

[1] In order to avoid premature detachment of the image from a rigid temporary support through drying too rapidly, the final support is sometimes cut larger than the temporary support, so that the margins overlap and are folded and glued over the back of the glass or metal plate. If this premature separation occurs, it results in patches of greater or lesser brilliancy than the rest of the image.

[2] It has been proposed to effect the final transfer in a solution of common alum of a strength of 1 to 2 per cent.

method; if either of the supports is rigid, a draining rack should be used.

Drying must not be too rapid, or there is a risk of the image leaving the final support, especially in the shadows. Drying too rapidly may also cause a glazing of the image in parts. If the air is very dry and the temperature high, it is well to retard the drying by keeping the print for several hours between moist blotting boards.

When the final transfer is made on any gelatinized support other than paper, the preliminary soaking in cold water will not require to be longer than 20 minutes, unless a large proportion of alum has been added to the gelatine.

After drying thoroughly, the print adhering to the final support should separate from the temporary support either spontaneously or by pulling it away gently, provided that the temporary support has been properly waxed. If both supports are flexible, their separation can be effected by drawing them under the edge of a ruler, as in straightening out a paper which has been rolled.

Any wax which may finally adhere to the print may be cleaned off with a tuft of flannel moistened with benzine or petrol.

With care, it is easy to transfer on to the same support several distinct subjects, such as the portraits of the various members of a family; or, equally, the several elements of the same picture, such as the addition of clouds to a landscape, a background to a portrait, the different parts of a panoramic view, etc., can all be treated in the same manner. These combinations are facilitated by the employment of either a transparent or translucent temporary support.

A carbon print can be glazed, after it is finished, by being re-wetted and dried on glass (§§ 614–615).[1]

662. Retouching and Colouring. Retouching and colouring should, preferably, be done before the final transfer,[2] with the exception of vignettes, which are generally finished in paste after the print is finally completed.

For retouching, it is evident that all water-colours may be used, mixed in such a manner that they match the colour of the print. But it is preferable to obtain, from the makers of the carbon tissue, colours prepared from the same pigments as those used in the manufacture of the tissue. Or a still more simple plan may be adopted: the trimmings of the tissue before sensitizing will provide the necessary colour. A cold solution of alum should be applied to the pigmented gelatine with a small brush in order to avoid any spreading of the retouching during the final transfer.

Finally, a light tinting can be applied to the image before the final transfer. This colouring will be seen through the image after it is transferred. For this tinting, albumen colours are preferable; they may be diluted with a solution of alum.

663. Principal Failures in Carbon Printing. In addition to the failures common to all printing processes, already considered in § 617, the principal failures in carbon printing, by single or double transfer, and their causes, are the following—

The Film of Gelatine Cracks or Splits. The tissue is too dry when unrolled for sensitizing or printing. It should be moistened by being kept for some hours in a cool cellar, or in a cupboard where several dishes of water have been placed.

The Gelatine Dissolves during Sensitizing. The bath has been too warm, or the tissue has been allowed to remain too long in the bath.

Running of the Gelatine during the Drying after Sensitizing. Due either to drying in too warm a place, or by keeping too long in the sensitizing bath.

Imperfect Adhesion between the Gelatine and the Support during Development. There are several causes of this defect. The tissue may have been soaked too long before transferring, or the margins may not have been protected, or insufficiently protected, by a safe-edge during printing. Further, the gelatine may have become insoluble through very slow drying after sensitizing, or by being kept too long after sensitizing, or by a general exposure to light.

The Original Paper Support Refuses to Come away in Development. If the edges only come away it is due to over-exposure, and it is advisable to try hotter water, or the addition of ammonia, or placing the print in a solution of

[1] Formerly enamelled carbon prints were made by using a temporary support of plate glass, prepared in the following manner: The glass was first slightly waxed and then coated with collodion. It was immersed in cold water as soon as the collodion was set until the print was ready to be transferred. The film of collodion remained attached to the image after the latter had become imbedded in the gelatine of the final support.

[2] Prints made by single transfer can, obviously, only be retouched on their exterior surface. But the retouching can be made to assimilate with the image by holding the print for a few moments in the steam issuing from the spout of a kettle of boiling water.

ammonium persulphate. If the paper will not come away at all, even at the edges, the tissue has been fogged by general exposure to light.

The Print is too Weak. The cause is insufficient exposure in printing.

The Print is too Dark. Over-exposure. Hotter water should be used.

Blisters Appearing during Development. Due to air-bells imprisoned under the film.

The Image Washes Off. The causes are the same as those of faulty adherence to the support, or the print may have been transferred too soon, or there has not been sufficient resin in the waxing preparation on the temporary support.

Markings and Reticulation. May be due to sensitizing and drying at too high a temperature, or rough handling with the squeegee, or transferring in water which was too hot or too alkaline.

Patches of Irregular Density. Mostly caused by the original paper support having been removed too late, and so protecting certain parts of the image from the action of the water.

The Image Comes Away from the Temporary Support during Drying. This is due to insufficient resin in the waxing preparation or to the drying having been too rapid.

The Final Support Refuses to Come Away from the Temporary Support. This is probably due to the temporary support not having been waxed; or the wax may have been removed in places by too much polishing, or the waxing solution may contain too much resin.

The Image is Partly on the Temporary Support and Partly on the Final Support. This is due to the gelatine of the final support not having been sufficiently swollen in water before transferring, or having been dissolved in places by being immersed in water at too high a temperature.

Shiny or Silvery Markings Appearing in the Light Parts of a Print Produced by Double Transfer, after Drying. Due to faulty adhesion of the depressions of the print with the gelatine of the final support, through excessive swelling of the print before the second transfer.

(*e*) Carbon Printing Without Transfer

664. The Artigue and Fresson Processes. Used for his own private work from 1878 by F. Artigue, a carbon paper to be used without transfer was placed on the market in 1894 by V. Artigue, under the name of "Charbon Velours." The coating of pigment is obtained by spreading on the paper, which is sized so as to stop-up the pores, a mixture of gelatine, sugar, and glucose. While this is still sticky, it is dusted over with a very finely divided pigment, according to a method of Beauregard (1857) and of Blair (1863).

Similar results may also be obtained by incorporating the pigment in the mixture of colloids, using about 5 parts of pigment to 1 part of the mixture of gelatine and sugar, and coating paper with an exceedingly thin layer of this mixture; a similar process is employed in preparing the Fresson paper (1900), made in various tints on supports of different textures.

After sensitizing for two to three minutes in a weak solution of bichromate (2 per cent at the most for daylight printing), preferably neutralized by addition of ammonia (till the colour changes from orange to yellow), at a temperature not much above 60° F., the paper is dried in darkness, and printed under the negative in the usual way. There is no need to mask the negative, and printing is timed by means of a photometer.

The exposed print is first soaked for several minutes in cold water, taking care to avoid air bubbles on either side of the paper, and then for a few seconds in tepid water, at a temperature not exceeding 86° F. Here the high-lights of the picture, protected during printing from the action of the light, swell and form an image in relief. During this immersion in the warm water, especially in the case of Fresson paper, there often appears a silhouette of the image, either negative (in the case of under-exposure) or positive (in the case of over-exposure). In either case the paper should be removed from the warm bath in order to be "developed" before the image becomes distinct.

To do this, the print is fixed by its upper edge to a zinc strip with clips, or laid on glass, or other rigid support, held almost vertically, and laved by means of a wide-mouthed coffee-pot, or a casserole with a long spout, with a mixture of white wood sawdust[1] (sifted through mesh No. 120) and water, in the proportion of 2 oz. to 10 oz. of sawdust to 20 oz. of water warmed to about 68°-75° F.[2] in a large tub, above which the print is held. The mixture of sawdust and water must be poured on to the

[1] Wood sawdust may be replaced by kieselguhr (infusorial earth), which is much finer and less harmful to the light details (J. Desalme, 1922).

[2] The optimum temperature for "development" is sometimes considered to be 2° F. lower than that necessary for the total dissolution of the coloured coating in 1 minute.

upper margin of the print, so as not to attack too vigorously the image over which it flows.

The slight friction of the sawdust on the previously swollen image drags away the pigment more quickly from the parts which are in greater relief and thus impedes the streaming, these differential frictions giving the modelling of the half-tones.

The same sawdust mixture may be used repeatedly, especially with addition of an antiseptic. Also, from time to time, it can be filtered on fine linen and washed with very hot water to free it from soluble matter.

The operator may use local control, by lightening certain parts with a stronger jet of the sawdust mixture squirted directly on, or by gentle touches with a brush or wet tuft of cotton-wool.

The image is somewhat tender, and should not be submitted to prolonged washing, so that it is best to eliminate the bichromate by immersion in a very dilute solution of sodium bisulphite, after which the print is briefly rinsed, and left to dry of itself by hanging it on a line.

665. Papers Exposed through the Back. Attempts have been made at various intervals to revive the use, in pictorial photography, of ordinary carbon tissues, rendered semi-transparent with paraffin oil after sensitizing, and then exposed through the support (V. Blanchard, 1895); or the exposure could be through a translucent paper (e.g. Japanese paper) on to which the carbon tissue had been transferred on removal from the sensitizing bath.

The following working method, described by H. Kühn in 1921, under the name of "Leimdruck" (glue printing), is employed by some German artists.

Sheets of strong glue (Lyons glue or Cologne glue) are broken with a hammer into small pieces, and soaked in cold water for about 48 hours. The excess of water is poured off, and this glue is dissolved in a water-bath in the water which it has absorbed. Then, in a mortar or on a polished stone slab, are mixed, with a grinding muller, about 150 minims of this solution,[1] 75 minims of a 10 per cent solution of ammonium bichromate, and 15 gr. of a very finely-ground black pigment (soft drawing crayon), the tone of which may be rendered warmer by a little red chalk; if the mixture is too thick it may be diluted with a very little water.

[1] Under the same conditions one can use strong liquid glue; the "development" would then be done in cold water.

A white or slightly-tinted paper, of smooth surface and thin substance, and larger than the negative, is fixed to a board with drawing pins, and covered rapidly with the pigmented glue, using a large soft brush. The coating must be sufficiently thick, but not too thick, or it will crack in drying. Inequality of coating has no harmful effects so long as the coating is sufficiently thick in all parts. After drying, a very glossy coating indicates that the proportion of gelatine to pigment is too great; a too matt coating points to an excess of pigment.

When drying is quite complete, the gelatine side of the sheet is laid down on a glass slab, and the back is covered over with paraffin oil, two applications at least, with a tuft of cotton-wool, the operation being done in a somewhat dark corner. A few minutes are allowed to elapse after each treatment, and any excess of paraffin is removed with blotting-paper before exposure.

Exposure to light being made through the support, the final image will be reversed unless a reversed negative or a film negative is employed. With many subjects, however, reversal does not matter.

The printing is best timed by means of an actinometer covered with a piece of the same paper employed as support, and similarly treated with paraffin.

When taken from the printing frame, the print is washed in cold water for about five minutes, then "developed" in warm water at about 85° F.

When drying is complete, the paper is cleaned by immersion for about three minutes in a grease solvent, e.g. petrol, benzine, or, preferably, a non-inflammable solvent such as carbon tetrachloride. As the paper, however, still retains a slight translucency, prints should be mounted with starch paste on to white card.

(*f*) The Gum-bichromate Process and its Variations

666. Gum-bichromate. Invented in 1858 by Pouncy, at a time when the only working methods in favour were those yielding absolutely sharp pictures of a structure imperceptible to the eye, the gum-bichromate process fell into oblivion until Rouillé-Ladevèze (1894), then R. Demachy, A. Maskell, C. Puyo, and many others showed the excellent use which could be made of it. Contrary to a widespread opinion, the gum-bichromate process does not necessarily need artistic handling. It is able to give, from a good negative, excellent prints without any personal interpretation. In France and other

countries, this method has, during recent years, been almost totally abandoned in favour of methods employing greasy inks, and it must often be regretted that such has been the case in view of the success with which the process is still used.

It is best to use only raw pale Senegal gum, with the addition of a suitable antiseptic. The gum solution improves with age, and there is, therefore, no objection to preparing a certain quantity in advance. It is customary to employ the moist water-colours[1] supplied in metal tubes, which have the advantage of being already very finely ground in an excipient which mixes readily with the gum solution.

The bichromate may be mixed with the pigmented gum solution before being spread on the paper; certain workers prefer, however, to impregnate the paper with a solution of about 10 per cent of potassium bichromate, and then to dry it, before coating with the mixture of gum and colour.

667. Preparation of the Mixture. In a glass jar of capacity about 20 oz., suspend a small bag of muslin in which has been put 10 oz. of gum, roughly broken up. Fill with cold water, and cover with a paper or cloth to prevent dust falling in.[2] The solution slowly becomes acid, and its fluidity increases progressively; after two or three weeks, dissolve in it 20 to 25 gr. of salicylic acid or thymol, in order to stop the fermentation.

It is best to choose from a small number of mineral pigments of great covering power. For black, use lamp-black (ivory-black is often too transparent), the tint of which may be warmed with a little yellow ochre or burnt umber, or tinged with blue with a little indigo; for reds, red chalk and Venetian red, with some burnt sienna or burnt umber.

The average proportions of gum and bichromate are—

Gum solution, 50%	3 volumes
Saturated solution of potassium bichromate (8 to 10%)	1 volume

but will vary with the fluidity of the gum solution. For 1 volume of bichromate solution, 2 to 4 volumes of gum solution will be taken, according as the latter is very thick or very fluid. The proportion of gum will therefore vary with its age; as a rule, the coating should contain as much gum as is compatible with the spreading of an even film (C. Puyo, 1903).

It is difficult to give figures for the proportion of pigments in the mixture, not only on account of variations in the covering power of the various pigments (or even of one pigment, bought successively under different brands), but also because of variations in the thickness given to the film when coating.

By way of a rough guide, the best that can be said is that for black prints, the average proportion is 15 gr. of moist colour for 3 drm. of bichromated gum. It would really be more precise to say that the proportion of pigment should be such that, when coating thinly, the film should appear dark-grey (somewhat tinged by the bichromate), and not black.

The mixture is made up on the basis that about 1 drm. of pigmented mixture is required to cover a sheet 10 × 8 in. intended for pictures $9\frac{1}{2} \times 7$ in.

The ingredients are mixed in a basin, with a hog-hair brush, size about 2 in. broad, and rather stiff. A drop of the mixture is placed on the paper and spread with the finger in order to judge of the depth of tone.

668. Coating the Pigmented Gum. The paper must be sufficiently sized to prevent the colour penetrating its substance. All drawing papers generally are suitable, if given a further sizing with a weak mixture (about 1·5 per cent) of arrowroot or starch, spread warm with a large brush. With writing papers, strongly sized with resin, the coating of the mixture is usually difficult. Chinese or Japanese papers need delicate handling. For the first trials it is well to choose a paper of very fine grain but not absolutely glossy.

On a drawing-board place a thick Bristol board (a Bristol board may be used a long time for papers of the same size), to which fix, with four drawing-pins, the paper to be coated.

The brush is well charged with the mixture, and lightly scraped on the edge of the bowl so as to contain as nearly as possible just the quantity required to cover one sheet of paper. It is rapidly drawn the long way of the paper, the trail of mixture thus deposited being immediately spread over the whole surface of the sheet of paper by cross movements, without leaving any bare spots. The excess of mixture is immediately removed, and the coating is

[1] It is possible to obtain pictures perfectly free from grain by using, instead of solid pigments, the indelible inks (Chinese inks and inks of all colours), used in commercial drawing (E. Quedenfelt, 1923).

[2] Some workers dissolve, with the gum, a little sugar (about 5 per cent of the weight of the gum) to increase the permeability of the dry gum and facilitate development.

smoothed over with a flat brush, either hog-hair or goat-hair, fairly thick and not too supple. The coating being thus uniform, it is finished by being smoothed with another brush, similar to the preceding, which is used with less and less force on the paper, while the board is turned in all directions. (For this purpose the board may be placed on a coin.) Coating should not last much more than one minute; a little less if possible.[1]

The sheet dries in about 15 minutes. Hold it near a stove or pass it above a flame, if necessary, until the paper shows a tendency to crack.

Prepare only the number of sheets necessary for one day, or, at the most, for the next day.

669. Exposure and Development. There being no transfer of the picture, printing is done under a negative in the usual way. Printing must be controlled with an actinometer; the time will depend on both the colour of the pigment and the thickness of the coating at the points where it is thickest in the hollows of the grained paper. Thus, it also varies with the grain of the paper, a coarse-grained paper possibly needing a time of printing double that which would suit a smooth paper. And, finally, it varies with the age of the paper. Paper which has just been prepared should be exposed a little less than paper prepared the night before.

The finest blacks are obtained, as a rule, with very slight under-exposure, the picture then developing in cold water in a very short time; over-exposure gives harsh pictures, with greatly-pronounced, and often irregular, grain.

Development must be done very shortly after exposure to the light.

For automatic development—the only plan recommended to beginners—the print is floated face down in a dish of water, and examined from time to time. The picture appears first for an instant as a negative, caused by differences of swelling, and begins to develop after a time which, according to the exposure and especially the age of the paper, varies from five minutes (fresh paper), to more than three hours (paper 24 hours old). Without troubling further about the picture, except to renew the water from time to time in the dish, after having removed the print for a moment, development is left to itself. It may take from three hours to more than 24 hours. If it is very slow, the keeping of the print in water for several hours after it is finished will do no harm.

In case of considerable over-exposure, cold water has no action at all; development must then be done with warm water, but only the crudest results will be obtained. If need be, development may be helped by a mixture of sawdust and water, as in the case of Artigue paper (§ 664).

When finished,[1] the print is put to dry, avoiding contact of anything with the picture, which is very tender. In course of drying the definition of the picture falls off a little, owing to very slight spreading of the gum. Outlines lose their biting sharpness, but otherwise retain their character.

670. The chief merit of the gum process lies in the fact that it gives an artist the power to improve a subject by lessening or suppressing excessive details, and introducing accents here and there. Such treatment can be carried out during development, during drying, or after drying.

There is always an advantage in starting development as above, postponing any alterations until the picture is distinctly visible. Then, by placing the print on a glass or other firm support, the development of certain parts may be hastened by sprinkling with tepid water, with a jug, or with a sponge squeezed out above the parts to be lightened. In small sizes a brush, charged with cold or warm water, may be used, but, for any small degree of lightening, and for all alterations to the principal subject, it will be found better to wait until the print is half dry, the gum then being much more resistant. After each local treatment, rinse with plenty of water in order to carry away from the picture particles of coloured gum which have been detached. For deepening of tones, colour taken from the margins of the print is used.

With an under-exposed print, in which the gum adheres very slightly to the paper, it is best to let the print first get completely dry. The gum is thus hardened, and the print may be moistened by a few minutes' immersion in water before proceeding to the retouching.

671. Multiple Printing. A process often used (and sometimes abused) consists in superposing in register, on the same sheet of paper, several impressions in the same colour, or in more or

[1] The coating of the gum solution may be done with a sprayer of a type considerably larger than those used for retouching; the preliminary sizing of the paper is then usually unnecessary (O. M. Powers, 1926).

[1] It is often advised to destroy any excess of bichromate by immersion in a very dilute solution of bisulphite of soda, and, after a brief rinse, to pass the print through a bath of alum so as to harden the gum a little. As a matter of fact, the dry print has lost much of its tenderness.

less different colours, either for obtaining multi-colour pictures or effects of double tone, or simply for modelling separately the lights and shadows of a monochrome picture. Each partial image must, obviously, be kept much less dense, and, consequently, the proportion of colour to gum should be less.

To allow of the easy registration of successive impressions with the same negative, the latter is held in a cardboard holder, from which protrude the points of three or four drawing-pins, pushed into the card on the side corresponding with the back of the negative. The cardboard should be recessed a little, so as to accommodate the heads of the drawing-pins, and thus the paper is perforated by the points of the pins and is held in the same place on the negative during the various printings. The paper must be backed with felt, thick enough to prevent all contact of the pin-points with the hinged back of the frame (F. Grandmaître, 1923).

After the development of each impression, the print is put aside to dry in very strong light, so as to harden the gum under the influence of the traces of bichromate retained in the film. The next coating is proceeded with, and the print is replaced in the frame for the next exposure, so that the perforations of the sheet engage anew with the drawing-pins.

672. Commercial Gum-bichromate Papers. A paper coated only with pigmented gum cannot be sensitized without dissolving an appreciable fraction of the gum, with risk of running during drying. Attempts have been made to get over this difficulty by dissolving in the gum a certain quantity of alum, which, after drying, reduces the solubility considerably, but the only gum-bichromate papers which have been put on the market are those in which the gum has been mixed in a jelly of gum tragacanth prepared by boiling (Hochheimer, 1900). The development has then to be done with warm water.

673. Bichromated Wash-drawing. This interesting variation of the gum-bichromate process is particularly suitable for obtaining large pictures, by printing under enlarged negatives.

A drawing-paper, which the beginner should choose of fine grain, is first sized with a very thin film of weak gelatine solution. For this, the following mixture is used—

Crystallized sugar . .	35 gr. (4 grm.)
Coignet soft photographic gelatine	35 gr. (4 grm.)
Water	2 oz. (100 c.c.)

prepared by allowing the gelatine to swell in the solution of the sugar, and dissolving it on a water bath below 115° F. The sizing is preferably done in a room at a temperature of at least 70° F.; the paper should then be at the same temperature as that of the room. It is fixed with drawing-pins to a drawing-board, placed level, and the gelatine solution poured on the centre in the proportion of 15 minims for each 16 sq. in. of surface to be covered. The solution is spread with a swallow-tail brush, previously impregnated with the gelatine solution, and squeezed out on its edges. The solution is driven into the pores of the paper by vigorous operation of the brush, spreading it evenly until the sizing has a matt appearance. The sheet is then passed through the steam from a pan of boiling water till the gelatine becomes uniformly glossy. In the interval between the two sizings the brush is held in the steam to prevent the gelatine in it from setting.

Now, on a glass, roughly ground, put 15 gr. of de-greased lamp black (choose a black of brownish tint), placing the powder in the form of a tiny crater. Now pour into this 40 minims of a 50 per cent solution of gum arabic; mix thoroughly with a flexible knife, adding gradually 30 minims of pure water. Grind with a glass muller for about 10 minutes, until the mixture becomes perfectly even. To cover a sheet of "royal" size (20 in. × 26 in.), about 30 gr. of this paste is placed in a very clean cup, and addition made of about $\frac{3}{4}$ in. of the strip delivered by a tube of sepia water colour. This addition gives a warmer tone, and, at the same time, improves adherence of the coating. Now add from 4 to 5 dr. (the smaller quantity in cold and damp weather, the larger in warm and dry weather) of the following mixture, prepared with boiling water—

Crystallized sugar . .	18 gr. (2 grm.)
Starch	18 gr. (2 grm.)
Water	2 oz. (100 c.c.)

After thorough mixture, this paste is placed at the centre of the gelatined sheet and spread with the swallow-tail brush previously charged with water; when the colour begins to thicken, a flat goat-hair brush is used to finish off the coating, the first stroke of this brush being at a right angle to the last stroke of the swallow-tail brush, so as to break up the streaks. Continue in this way until the sheet is surface-dry,

and then leave to dry thoroughly by hanging from stretched cords.

The sensitizing is done, as required, by immersion in a 1 per cent solution of ammonium bichromate, with the addition of 1 per cent of neutral sodium or potassium citrate.

The negatives best suited for this mode of printing are those in which the extreme opacities are in the ratio of 1 to 20.

The exposure should be about equal to that required to make a P.O.P. print of depth for toning and fixing.

Before development, the print is immersed face downwards for about 10 minutes in a dish of water at 115° F., taking care to avoid adhering air bubbles. As the water slowly cools down, the print is moved about from time to time. The print is then fixed to a rigid support, sloped to about the angle of a painter's easel, and development is begun by squirting on to the surface, with a toilet spray or an air-brush, water of a temperature about 18° F. higher than that of the soaking water. The sprayer is held from 12 in. to 16 in. from the print, and the water squirted all over the surface. As required, the development may be localized by bringing the vaporizer nearer. Development takes about 20 minutes for a surface 9 × 5 in. which has been correctly exposed.

(*g*) Prints by Dyeing Films of Bichromated Gelatine

674. General. If bichromated gelatine is coated on a support impermeable to aqueous solutions, dried, exposed under a positive, and then rinsed with water to remove excess of bichromate, the aqueous solutions of certain dyes will penetrate the gelatine where it has been protected against the action of light, but will not penetrate the relatively impermeable regions. The dye absorbed by the gelatine thus forms a positive image in tones (E. Edwards, 1875; C. Cros, 1880).

On the other hand, a gelatine relief, obtained in the same way as a carbon print, but by means of unpigmented gelatine (A. Chardon, 1875), or of gelatine pigmented temporarily for the purpose of regulating the action of the light or of facilitating control of the development (A. and L. Lumière, 1900), may be transferred to a support, or actually made on an impermeable film support, and dyed uniformly by means of dyes, which are readily fixed by almost impermeable gelatine. In this case, as in making a carbon print, a positive is obtained by printing from a negative.[1]

It was found by Cros that the dye thus absorbed by the gelatine could be transferred to moist paper placed in contact with it, the one film of gelatine being able, after fresh impregnation, to furnish a certain number of prints. He gave this process the name of *hydrotype*. Sanger-Shepherd (1902) made a similar observation in the case of images obtained by dyeing a gelatine relief, using a paper coated with very soft gelatine for taking impressions. L. Didier (1903) worked out the dyes best lending themselves to selective absorption on undeveloped gelatine, and to the subsequent "printing" by contact with gelatine-coated paper. This method has been put on the market under the name of *Pinatype*.

These methods are employed chiefly for obtaining multicolour transparencies for use as advertisements and for the production of three-colour pictures on paper. The Pinatype process, by using a black dye, may be employed for making a *reversed negative* or *positive* in one operation.

The images thus obtained, even when the further precaution is taken to mordant the dyes absorbed by the gelatine, are never quite fast, and so should never be exposed to the direct sun.

675. Imbibition without Development—Pinatype. Fogged or doubtful dry plates may be used after removal of the silver bromide. After fixing with hypo and washing, the plates are dried, then sensitized in a 2·5 per cent solution of ammonium bichromate (neutralized by the addition of ammonia until it turns bright yellow), and then put aside to dry; or the glasses from waste negatives may be gelatine-coated. The perfectly cleaned glasses are first coated with a very weak solution of sodium silicate (commercial solution diluted about fifty times with water) in order to increase the adherence of the gelatine to the glass, drained, and dried. The glasses are then levelled, silicated side upwards, and coated with a solution of hard gelatine (4 per cent for transparencies or 8 per cent for a Pinatype printing plate) in the pro-

[1] The latitude (straight-line portion of the characteristic curve) becomes considerably greater when the penetration of light into the film is impeded by the presence of an absorbent substance. The contrast tend to be less, but this can be remedied by using a stronger dye bath. The maximum latitude is obtained only after long immersion (24 hours or more), the penetration of the dye being very slow in the parts rendered most completely impermeable (A. C. Hardy and F. H. Perrin, 1928).

portion of 13 to 18 dr. per sq. ft. After drying, the gelatine-coated plates are sensitized in the bath given above.[1]

After exposure under a positive transparency (or under a negative when making a reproduced negative), the printing being controlled with an actinometer, the plates are washed for five minutes. To avoid diluting the dye, the plates are best dried before dyeing.

When it is not desired to print the image by transference of the dye to sized paper, the dyeing may be done in approximately 2 per cent solutions of one or another of the following dyes (L. Lemaire, 1911), or in suitable mixtures of these dyes—

Red: Ponceau extra, lanafuchsin.
Yellows: Solid acid yellow, quinoline yellow.
Greens: Solid bluish green, naphthol green.
Blue: Diamine blue.
Violet: Lanacyl violet.
Bluish or purplish blacks: Naphthol black, naphthaline black, amine blacks.

For transfer of the image to paper, use is made of either the special dyes sold as Pinatype[2] or of the dyes given below, both being perfectly suitable also for positives which are not intended for transfer to paper.

Red: Dilute 25 to 35 gr. (3 to 4 grm.) of natural carmine with a very little distilled water, add just enough ammonia to dissolve—20 to 50 minims (2 to 5 c.c.)—and add distilled water to make 20 oz. (1,000 c.c.)
Blue: 3 per cent solution of pure diamine blue or benzoine blue BB.
Green: 3 per cent solution of naphthol green B.
Yellow: 3 per cent solution of Thioflavin S., acidified by a little citric acid.

After impregnation of the dye (about 10 minutes the first time) the plate is briefly rinsed, and a small squeegee then used to apply to it a sheet of sized paper (soft gelatine, with no alum, or very little), e.g. double-transfer paper, as used in the carbon process (§ 660), which has previously been soaked in cold water. This is covered with moistened blotting-paper, then with rubber sheeting to prevent drying, and is then left for 10 to 15 minutes, during which time the colour passes from the hard to the soft gelatine.[1] From time to time a corner of the paper may be lifted for examination, taking care to replace the two gelatine surfaces immediately in contact.

For further prints, the impregnation of the plate will only need three minutes.

Whichever method is used to obtain pictures, i.e. direct dyeing of the positive transparency or transfer to sized paper, the dye must be fixed on the gelatine by immersion for about five minutes in the mordanting bath—

Chrome alum . . .	18 gr. (2 grm.)
Copper sulphate . .	18 gr. (2 grm.)
Water, to make . .	2 oz. (100 c.c.)

and then rinsed for about five minutes.

676. Dyeing of Gelatine Reliefs. To obtain reliefs for dyeing, suitable material is gelatino-bromide (celluloid) film without gelatine coating on the non-emulsion side. This is sensitized with bichromate, exposed under a negative through the back (the uncoated side of the film against the emulsion side of the negative), developed in warm water, the silver bromide removed in a fixing bath, and dried. The relief so obtained may be dyed by immersion in solutions of a very large number of acid dyes.

For the preparation of a "carbon" paper readily permitting of the superposition of several component images, the process described in 1901 by A. and L. Lumière may be used.

A glass is polished with talc powder, and the edges then coated, with a brush, by a thin solution of caoutchouc in crystallizable benzine. When the rubber is dry, the glass is coated with enamel collodion (see § 655, footnote), and, after drying the collodion, a sheet of clean paper is applied to the coated side by means of a solution of gelatine, warmed to 120° F., into which the paper and the glass are placed. The two are brought into contact in this solution, and the excess is immediately expelled with a squeegee.

[1] The bichromate should be dissolved in the gelatine solution before the latter is coated on the glass. The quantity of bichromate to use is two-fifths the weight of the dry gelatine.

[2] According to the patent, now public property, one may use the Mikado dyes derived from nitrotoluene-sulphonic acid, the soluble azo dyes of dihydrothiotoluidine, primuline, and its homologues, as also their substitution products, the sulphonates of induline and nigrosine, some diamine colours, and the alkylsulphonic derivatives of anthraquinone.

[1] Images obtained by transfer from one layer of gelatine to another always lose some sharpness owing to the lateral spread of the dye unless the receiving gelatine has been uniformly mordanted (R. von Arx, 1927). It has been suggested that this mordanting be effected by dipping the gelatine-coated paper in a solution of aluminium sulphate or alum, and then in a buffer solution of sodium acetate, the success of the transfer depending essentially on the degree of acidity of the gelatine receiving the image (M. W. Seymour and A. Clair, 1936). Processes utilizing the transfer of a dye are usually rather inconstant; their commercial application always demands delicate adjustment.

After drying, the paper is coated with white varnish, diluted with an equal volume of alcohol, and left for about 12 hours to dry. The paper, still secured to the glass, is now ready to receive the bichromate mixture, temporarily tinted with cochineal—

Gelatine, emulsion	1,000 gr. (120 grm.)
Pale strong glue	1,000 gr. (120 grm.)
Ammonium bichromate	525 gr. (60 grm.)
Potassium citrate	90 gr. (10 grm.)
Cochineal red	9 gr. (1 grm.)
Alcohol	4 oz. (200 c.c.)
Water	20 oz. (1,000 c.c.)

This mixture, filtered through muslin, is coated on the levelled plates, in the proportion of 13 to 16 dr. per sq. ft. When the gelatine has set, the glasses are placed on racks, and dried in the dark in a current of air. The drying conditions must remain perfectly constant, any variation being liable to produce coloured areas in the final picture. After drying, the papers are removed from the glasses that have served as supports.

Following exposure under a negative (controlled by an actinometer), the paper is transferred to a collodionized glass, prepared according to the formula above, and then covered all over with a very dilute solution of rubber (about 60 gr. per 20 oz., 7 grm. per 1,000 c.c.).

Before development, the transfer is left in cold water for about two hours to allow the gelatine to swell uniformly; the development is carried out at between 95° F. to 104° F.; when the development is finished the picture is decolorized, and then presents the appearance simply of a very slight relief. It is then washed in cold water, and put aside to dry.

For the dyeing use may be made, among other colours, of the following baths (three-colour dyes, A. von Hübl, 1912) or mixtures of them—

Rhodamine, S.	2·2 gr. (0·25 grm.		
Solid bluish green Bayer	—	9 gr. (1 grm.)	
Naphthol yellow	—	—	4·4 gr. (0·5 grm.)
Alcohol 90°	2 oz. (100 c.c.)	2 oz. (100 c.c.)	2 oz. (100 c.c.)
Glacial acetic acid	—	50 min. (5 c.c.)	50 min. (5 c.c.)
Saturated chrome alum solution	—	—	1 oz. (50 c.c.)
Water, to make	20 oz. (1,000 c.c.)	20 oz. (1,000 c.c.)	20 oz. (1,000 c.c.)

After the dyeing, which, at the dilutions given, may take several hours, the excess of dye is removed by a brief rinse.

When there is occasion to superimpose several component images, the final effect may be judged by packing the glasses bearing these images in two wooden blocks, placing the whole well above an opal glass or white paper. The necessary corrections, general or local, may then be made by fresh dyeing or by decolorizing with water rendered slightly alkaline with ammonia. Each of the pictures is then mordanted, as previously described, rinsed, and put aside to dry.

The dried images are coated with a 1·5 per cent solution of rubber, then with a 1 per cent solution of collodion. To superimpose the pictures, use is made of a temporary support, prepared as indicated below, cemented to one of the pictures, with a 15 per cent solution of strong glue. After complete drying, the paper is removed, bringing the print with it. This latter is applied on the next image by means of an alum-gelatine solution, made as follows—

Hard gelatine	1,000 gr. (120 grm.)
Glycerine	1 oz. (50 c.c.)
Chrome alum, 10% solution	1½ dr. (10 c.c.)
Water, to make	20 oz. (1,000 c.c.)

Registration being controlled through the glass, the squeegee is used to remove any excess of gelatine, and the whole is left to dry. The paper, carrying with it two pictures, is then removed, and the process repeated for the succeeding image. This method may be used to transfer the whole series of the pictures to glass, or to keep it as a film. In both cases the paper will be detached from the block of images by immersion in warm water, which dissolves the glue but not the hard gelatine.

(*h*) Dusting-on Processes

677. General. Garnier and Salmon, who, since 1858, had used a solution of ferric citrate for the same purpose, showed in 1859 that a thin layer formed of albumen, sugar, and bichromate, coated on glass, dried, and exposed under a positive transparency and then kept for a few moments in a damp atmosphere, will retain, on those parts protected from the action of light, mineral substances in powder form dusted on the surface. The powder cannot adhere, however, to parts sufficiently modified

by the action of the light; there is very satisfactory rendering in the tones.

With some minor modifications, this method has been regularly used since then for the production of *photographic enamels*, and for the photographic decoration of ceramic goods, powdering being done with vitrifiable glazed colours.[1] The method is also most suitable for making duplicate negatives or positives direct, and also provides the means for the intensifying of negatives or positives without affecting the original image in the least. It is for these latter purposes that it is described below.

Some years ago R. Namias (1922) resuscitated a process used in 1879 by A. Sobacchi for copying tracings, and applied it to pictorial photographic printing (*resinopigmentype*); a similar process was brought out by E. Buri (1924).

In connection with these processes may be mentioned the "color" process of J. Sury (1913), constituting, in a way, a method for preparing photographic pastels.

678. Direct Reproductions by the Powder Process. Dissolve in the cold—

Gum arabic	1 oz. (50 grm.)
Sugar	2 oz. (100 grm.)
Water, to make . .	20 oz. (1000 c.c.)

to which may be added an antiseptic, e.g. 18 gr. (2 grm.) of salicylic acid. At the time of use, the required quantity of this liquid, which must be quite clear, is mixed with a quarter of its volume of a 20 per cent solution of ammonium bichromate. This mixture is coated in a thin film on a perfectly clean glass. Excess of liquid is drained off, and the plate is dried by holding it, bare face downwards, over a gas ring,[2] until the coating is no longer sticky to the finger. Before the glass has quite cooled down, it is placed in a frame under the negative (or positive transparency), which should be perfectly dry, and exposed to light.

As soon as exposure is complete, the plate is supported above a sheet of white paper, against which the development of the image is followed, taking care not to breathe on the sensitive coating; to prevent this, a piece of glass is held in front of the operator.

A large, very soft, and perfectly dry badger-hair brush is dipped in the finest powdered graphite, which must have been dried for some minutes in a metal container on a stove. The brush is then drawn very lightly in all directions over the sensitive surface.

The image gradually appears, according as the portions of the layer protected from the action of light absorb the moisture from the air. The contrasts of the image will not increase beyond a certain point, the powder then beginning to adhere uniformly all over the surface. Powdering must be stopped before this point is reached, and the image must then at once be given a coating of collodion.

The same method is used in intensifying a negative, the sensitive coating being applied on the surface of the image, which has been previously varnished.

The method may also be used for obtaining positive images by printing (from a negative) on a black support (or on clear glass which is given a coating of collodion and then of black varnish). In this case, powdering is done with a white or very light powder, e.g. aluminium powder or bronze powder.

679. Resinopigmentype. The material used is a smooth paper base, heavily coated with hardened gelatine. This is sensitized by immersion for two or three minutes in a 5 per cent solution of ammonium bichromate.

The sensitized paper is exposed under a positive transparency (or under a very vigorous positive print, the contrast of which is naturally less when used by transmitted light) in the shade or in sun,[1] until a weak negative image in brown on a yellow ground is seen on the paper.

The print is left in water, which is renewed several times, for a long enough time to remove all colour from the ground, on which appears an extremely weak yellowish image. The print is then placed in hot water (about 120° F.) until it shows well-marked relief[2] (two to three minutes). The print is then laid face down on several thicknesses of blotting-paper, and dried with filter paper or with a pad of butter muslin.

Immediately afterwards comes powdering with pigments, prepared by grinding and pow-

[1] Vitrified photographs are unaffected by atmospheric conditions only if the "flux" used is not too rich in lead salts (which would gradually turn black by sulphiding) and contains only a negligible proportion of soluble salts (borax, etc.), which are sometimes used to lower the melting point.

[2] With the other hand, a glass of larger size should be held above the sensitive layer to protect the gum from dust.

[1] Printing in the sun should be avoided with a positive print which has been worked up on the back.

[2] If the paper has been sensitized several days beforehand, it is necessary to add 1 to 2 per cent of ammonia to the warm water.

dering a melted mixture of resin, wax,[1] and a suitable pigment (lamp-black, mineral colours, etc.). These are spread with a very soft round brush, carried over the surface of the gelatine in circular movements, pressing harder on those parts where it is wished to increase the density of the image. Excess of non-adhering powder is swept away with the same brush, and any working-up of the shadows then done with a somewhat stiffer brush.

In case of lack of contrast, the print is put in cold water, and powder is removed by friction with a cotton pad. The powdering is then repeated, after having passed the print again through hot water, with the addition, if need be, of a stronger dose of ammonia, to increase the swelling.

As the pigment adheres very slightly to the damp print, retouching is easy at this stage by erasure with a moistened brush, after blotting off, but it is well to *dry the print first* and then to remove the last traces of bichromate by immersion in a very dilute solution of sodium bisulphite, followed by a quick rinsing. After drying, erasing may still be done with india-rubber or an erasing knife.

The colour may be fixed by passing the dry print through steam from a vessel of boiling water, the colours setting without rendering the print glossy. Use may also be made of an alcoholic fixative varnish, sprayed with an atomizer.

680. Color Process. The Color paper is coated with a layer of gelatine, in which is suspended a light blue pigment, removable with an effervescence by an acid bath (artificial ultramarine), the evolution of gas giving the gelatine a spongy structure (which allows it to retain firmly the powdered pigments applied to its surface), and a white filling powder, such as barium sulphate. Paper thus prepared is sensitized with bichromate, dried, exposed under a negative, and developed in tepid water. The bichromate stain is removed in a very weak solution of hydrochloric acid, and the print again washed and dried. The image is then powdered with powdered pastels, applied with a brush, this method allowing of effects in several colours being obtained. The pigment may be consolidated by means of a fixative, or transferred to an adhesive paper.

[1] The wax and the resin form a dry mixture acting merely as an envelope of the pigment to increase its saturation, and avoid soiling the paper, the pigment being retained by the wet gelatine.

(*i*) Prints in Greasy Inks on Bichromated Gelatine

681. General. The process of making prints in greasy inks on bichromated gelatine (called also the *oil process*)[1] introduced in 1904 by G. E. H. Rawlins, as a method for use in pictorial photography, is, in fact, only a variation of methods used since A. Poitevin (1855) in various photo-mechanical processes, collotype, and production of prints for photo-lithographic transfer. The process consists in inking with a roller a layer of bichromated gelatine which has been exposed to light under a negative and washed in water, thus swelling in the protected parts and remaining nearly dry in the parts most completely changed by the action of light. Owing to the well-known repulsion between water and greasy substances, the ink takes only on the dry portions (or those scarcely damp), or, at any rate, adheres effectively only in these parts.

In the Rawlins method the crude and mechanical action of the ink roller is replaced by inking with a brush, which is easy to control and to localize. In the hands of an artist this is a method of wonderful elasticity, and can easily yield prints of great beauty. Still, there is the layer of gelatine which forms the support of the image. This drawback has been removed (R. Demachy, 1911) by transferring the image to plain paper of a quality usually used in art copper-plate printing, the gelatined paper on which the image has been made thus playing the part of a printing plate.[2]

The image, printed from a negative in the normal way, is correct, as regards right and left, on the gelatined paper, and is thus reversed by the operation of transfer. In all cases in which it is important for the picture to be "the right way round," the print on gelatined paper must be made from a reversed negative.[3]

[1] The printing inks used are made of finely ground pigments suspended in a varnish which is simply linseed oil much thickened and rendered quick-drying by oxidation during a more or less prolonged heating. In fact, they differ from colours for oil painting only in the greater consistency of the oil and in the higher content of pigment, the inks being always used in much thinner layers.

[2] It may be noted that it has been suggested to degelatinize the paper, after inking-in the image, by immersion for some minutes in a weak solution of sodium hypochlorite, followed by washing in water (G. Underberg, 1925).

[3] Reversal may be avoided, as J. Rowatt (1922) has shown, by transferring by a method identical with that used in offset printing, that is to say, by intermediate transfer of the image to a rubber sheet, whence it is transferred to the final paper support.

682. Materials and Apparatus. The gelatine-coated paper[1] is generally chosen from among double-transfer papers for the carbon process (§ 660), avoiding the use of papers with a glossy coating and also those of stiff substance. The beginner will limit his choice to the smooth or matt papers, never grained papers, the use of which must also always be avoided when the image is to be transferred. The paper should be cut so as to allow a margin of about $\frac{3}{4}$ in. all round the subject; even in good conditions inking cannot be done up to the edges of the sheet.

The inks supplied on the suggestion of Rawlins for use in this process were very fluid and quick-drying inks, covering a paper almost uniformly if the gelatine was only moderately swelled. Gradation was then obtained only by removing the ink by tapping with a dry brush, according to the hardness of the ink. Almost immediately afterwards, R. Demachy and C. Puyo recommended the use of two types of ink of different consistencies. By using mixtures in different proportions it is easy, according as the gelatine is more or less exposed (i.e. more or less swelled), to ink the image, and the image only, without having, as a rule, to remove any ink which has once been applied. These inks are, respectively, a very hard ink (due to its very large pigment content), such as is used for lithographic machine printing, and known as "litho ink," and a relatively fluid ink (containing less pigment), as used for copper-plate printing.[2] These inks are manufactured in all shades. The beginner will be wise to limit himself to blacks, which may be rendered warmer by a little burnt sienna, or more striking by a little ultramarine blue. Copperplate inks are supplied, on request, in boxes or in metal tubes of the kind used for artists' colours. Lithographic inks, as also collotype and typographic inks, which are slightly thinner, and the use of which has sometimes been suggested, are much too hard to permit of their being supplied otherwise than in boxes.[3] Dilution of the inks by addition of lithographic varnish (siccative linseed oil without pigment) has often been suggested; but this simply brings back the disadvantages of the excessively soft inks above mentioned. The most that should be done, in order to soften a copper-plate ink slightly, is to add to it a very small quantity of artists' oil colour.[1]

Inking is done with polecat-fitch brushes, of hind's-foot shape, of diameter appropriate to the size of image to be inked (No. 9 or 10 for small sizes, No. 14 or 15 for large sizes), with a few brushes of the same shape but smaller (Nos. 3 to 7) for local inking. Straight polecat-fitch brushes, listed as necessary implements in some inking outfits, are considered useless by the best specialists.[2]

The inks are mixed on a plate or on any piece of glass, using an artist's straight palette knife, or, failing this, an old, flexible-bladed table knife.

For the inking operation, the sheet is placed on a bed of several thicknesses of damp blotting-paper; if plate-glass is not available the supporting block may usefully be protected from the moisture by a piece of oilcloth. If an artist's easel is available, advantage may be taken of it for holding the supporting board during inking.

683. Sensitizing and Exposure to Light. The paper may be sensitized by soaking in a 2 per cent solution (in water) of potassium bichromate, or by brushing over with a 6 per cent solution of ammonium bichromate, which, at the time of use, is mixed with twice its volume of methylated spirits (industrial spirit). The sensitized paper keeps only for about 48 hours.

In spite of the facilities offered by this process for the use of either soft or vigorous negatives, first trials should be carried out only with negatives of good gradation and not too vigorous.

[1] Some trials of C. Duvivier (1919) may be noted in which unsized paper was used, covered only with a layer of starch solution.

[2] It would probably be advantageous to use concurrently two inks prepared respectively with a pigment of great covering power and with one of slight covering power, thus giving different contrasts (E. F. Fincham, 1933).

[3] Inks that have been kept a long time in boxes become covered with a film, somewhat of the consistency of rubber, which may, however, be restored by grinding it in a mortar with a little fresh ink. This hardening may be prevented by storing inks which are used only occasionally in lubricators for stiff grease, with a screw piston, or by covering them with water, which afterwards may be drained away and left to evaporate.

[1] In handling printing inks it is difficult to avoid soiling the hands. To remove easily the marks made by greasy ink, the hands should be soaped until a lather is formed, and then a little petrol should be poured on to the hands. This, together with the soap lather, should be rubbed into the stained places. When the hands are rinsed the ink will have completely disappeared. Sulphoricinates (oils for Turkey red) may also be used; they dissolve fatty substances and are afterwards removed by washing in water. (These products form the basis of "grease removers.")

[2] Some workers in printing with greasy inks use, to their entire satisfaction, for the inking of large sheets, short-haired brushes, of the quality of good shoe-blacking brushes but of a much smaller size. The beginner, however, will do well to conform to more generally accepted methods.

Inking with litho ink is only possible with a print which has had an exposure much longer than would be suitable for inking with copper-plate ink. Between these two limits all times of exposure will be suitable by determining by trial the best proportion in which the two inks should be mixed.

Although the image appears in pale brown on the yellow ground of the paper (the printing should be stopped when details appear in the high-lights), more certainty will be attained by controlling the exposure with a photometer (§ 508). The exposure is fairly short (from ½ to 2 degrees Artigue), and over-exposure must by all means be avoided.

684. Washing, Swelling, and Drying. As soon as possible after exposure to light, the paper is washed in several changes of water until nearly all colour has been removed, and then placed in a solution of sulphuric acid[1] of about 1 per cent strength, where the paper will be completely decolorized in two to three minutes. Then rinse in several changes of water. In this condition the sheet may be inked, or the inking may be indefinitely postponed, when it will only be necessary to re-moisten the dry sheet of paper.

To make the gelatine readily amenable to inking, it should be swelled, the relief being plainly visible and perceptible under the finger. This swelling may be done by immersion in tepid water (77° F. to 86° F.) or in cold water to which has been added 4 per cent to 10 per cent of ammonia; this is brushed over the surface of the gelatine.

If several identical papers be swelled, sensitized under the same conditions, and exposed under the same negative for times of increasing length, it will be found that the general swelling of the gelatine is in inverse ratio to the length of the exposure, but that the relief of the image, that is to say, the difference of level between the regions most swelled and those least swelled (whites and blacks of the image), at first increases with the time of exposure, then passes a maximum, and begins to decrease as the exposure is very prolonged. The correct time of exposure corresponds with the maximum of the relief of the image.

The print being suitably swelled, it is placed on the bed of moistened blotting-paper, where it will adhere of itself, and dried by wiping (not by dabbing, which might leave rough spots) with a pad of well de-greased chamois leather or an old handkerchief.

[1] See note to § 364: precautions to be taken when handling sulphuric acid.

To keep the margins white, they are covered with wet strips of parchmentized paper, cut to straight edges, and placed so as to make a rectangular frame (when the image was visible, the four corners of this rectangle may have been marked on the print with a pencil). These strips are fixed to the blotting-paper with drawing pins.

685. Inking the Print. In two opposite corners of the pallette are placed small dabs (about as large as a pea) of litho ink and of copper-plate ink. These dabs of ink are then smoothed out with a knife.

In three metal boxes, weighted with pebbles, are placed the brushes, hairs uppermost, which are to be used with the hard ink, with the softer inks, also those which are to be used dry.[1]

Finally, in full view is placed a perfect print from the same negative which has been used for the oil print.

The inking brush is pressed on the mass of hard ink, then tapped with little blows on a clean part of the glass in order to distribute the ink evenly throughout the brush. Then, held by the first three fingers just above the thickest part of the handle, the brush is pressed flat on a part of the print, including both a black and a white, pressing slightly up and down and at the same time turning it lightly round in the fingers, without, however, letting the hairs lose contact with the gelatine. If, on raising the brush, it is seen that the image is correctly rendered, with full blacks and nearly clean whites, and if the proper gradation can be obtained with light tappings,[2] it may be concluded that the exposure and the swelling suit the litho ink, and that one may continue to use this ink.

If the blacks do not come up, and if the tapping results only in removing ink from them, the exposure has been too short for use of the litho ink, or the swelling has been excessive, and the proper thing to do is to try successive mixtures of litho ink with various proportions of copper-plate ink, at first very small, then more and more, until inking takes place easily. If, in this way, it is found necessary to use copper-plate ink almost pure, it may be thought that the print is too damp. Let the print dry, after

[1] New brushes should be kept for the dry work. Brushes in which the hairs have become shorter by use, and consequently harder, should be kept for applying the ink.

[2] The best exponents of pigment processes expressly advise against the use of mechanical devices for this tapping.

having cleaned off the ink, and swell it less at the next attempt.

Finally, should the gelatine be covered uniformly with hard ink, or should, at any rate, the whites and greys of the image take the ink in the same degree, the exposure may be judged to have been excessive, or the swelling insufficient. Further swelling may be tried, but the result will probably be of mediocre quality.

It is always best to begin inking in the most important part of the picture. After application of the ink by the gliding and twisting of the brush, a light tapping takes away the excess of ink in the whites and causes it to penetrate the shadows. A very similar result may also be obtained by a rapid sweeping with the tips of the hairs. Portions of the picture of less interest are then lightly brought up with a brush almost free of ink, then progressively strengthened to the degree deemed correct.

At any moment the work can be wiped out with a pad of cotton-wool impregnated with petrol, followed without delay by a soft sponge well charged with water. After this, the print may be replaced in warm water to swell, or in ammoniated water.

Alterations in the composition of the ink allow various depths of tones to be obtained and controlled at will, the gelatine retaining the ink readily according to the softness of the latter. Parts treated with the soft, which may be thought too heavily inked, may be lightened by tappings with a brush charged with hard ink, which will restore the lost contrasts, by virtue of the greater stiffness of the ink resulting from the mixture.

Pure whites may be made with a small brush wetted with water. Shadows, on the contrary, may be obtained with a brush which has been charged with petrol; the flat tone thus obtained is afterwards modelled by tappings.

Hairs and particles sticking to the picture are easily removed by touching them with a bit of hard rubber, shaped to a point, the mark thus made being removed by tappings. The same rubber is also useful for obtaining a pure white accent.

After each stage of the inking process the brushes should be well cleaned, first with petrol, then with gasoline. After rinsing, they should be hung up, hairs downwards, to dry.

686. Drying and Cleaning the Print. Whilst a print dries fairly rapidly if on an unsized paper, such as those generally used by printers, owing to the penetration of the greasy matter into the porous paper, ink on a layer of gelatine dries only very slowly. Thus the print remains in a tacky state for a very long time, and contact of anything with the image is liable to remove the ink or smudge it. In order to dry it, the print should be pinned by the four corners to a wooden board or a stout card, and left to itself for several weeks.

To hasten drying, and at the same time to avoid the shiny appearance given to the print by oil unabsorbed by the paper, it is practicable, after at least a week of spontaneous drying, to subject the print to a grease solvent, such as petrol or carbon tetrachloride (the latter having the advantage of being non-inflammable), used in a dish, with avoidance of any rubbing of the picture. After leaving it in for a few minutes, the dish is rocked from time to time, and the print then taken out, drained, and put to dry. The image is then perfectly matt and is free from any tendency to set off on to any object with which it comes into contact. It even resists energetic rubbing fairly well or even the pressure of a dry-mounting press.

687. Special Instructions for Obtaining Prints by Transfer. Whilst a good print may be obtained on any paper having a matt coating of unhardened gelatine, even when very thin, a transfer is obtained easily only with a paper having a relatively thick coating of gelatine, and presenting very strong relief. It is advised, especially for first trials, to choose fairly strong, though not harsh, negatives.

A print inked with litho ink never works so well as one inked with copper-plate ink. Though the image may be of ample vigour, it does not follow that the transfer will be so. The full quantity of the ink never appears in the transfer, and, in parting with its ink, the print is generally less effective when the ink is hard than when it is soft. It may be said that copper-plate ink, stiffened, if need be, with a very little litho ink, or softened with a little oil colour, is the normal ink for transfer printing.[1]

When several transfers are successively taken from the same print, inked each time with the same ink, it is found that the contrasts increase from one print to the next. Even if the first print is a little grey, the fourth print will probably have blacks so dense that all detail will be lost. This is because the gelatine becomes

[1] The drying of the ink on the print may be delayed a few hours, so as to allow of transfer being postponed, by incorporating in the ink a very small quantity of clove oil.

capable of absorbing a greater quantity of water after each passage through the press, with proportionate increase in the relief of the image. Indeed, for this effect it is not necessary to make actual transfers; the passage through the press of the gelatined sheet between two clean pieces of porous board is able, when repeated several times, to cause the gelatine to absorb such a quantity of water that it rejects even copper-plate ink. This " blank printing " (preparation) is often made use of for facilitating the inking of prints intended for transfer. When the gelatine is thus excessively swelled it is sufficient to allow it to dry and then to re-moisten it to the desired extent, in order to continue the printing, if so required.

688. Papers for Transfer Printing. Transfer may be made on nearly all papers, but it is easier to get good results on the unsized or half-sized papers generally used in printing artists' proofs in copper-plate, in particular Holland, Arches, and Japanese papers. Choose papers of cream or light chamois tint for printing in black; white papers for printing with coloured inks.

For press transfers, the unsized or half-sized papers should be damped. Sized papers are generally used dry, with the exception of drawing papers, which are slightly moistened.

For " without press " transfers of prints of about 10 × 8 in., the paper does not usually need to be moistened.

Printing on damp paper always slightly reduces the contrasts in the picture.

In case of urgency the sheet to be moistened is dipped in water, drained, and wiped between two smooth blotting boards, preferably by passing through the press. When a certain number of prints are to be made, the method adopted by printers is followed: a piece of zinc or glass larger than the paper is placed flat on a table; on it are placed in succession a dry sheet, a sheet wetted by immersion in a dish of water, two dry sheets, a moist sheet, and so on, finishing with a dry sheet. The pile is covered with a piece of zinc or glass, and a weight is placed on top. In a few hours moisture spreads uniformly throughout the pile, and for several days the sheets will retain the suppleness desired.

Wetting with water can be replaced by impregnation with liquids which give the paper a greater affinity for the fatty ink which can then be transferred with less pressure, i.e. without crushing the grain of the paper. Good results have been obtained with petrol (R. Demachy, 1933).

689. Press Transfer. For the transfer a lithographic press may be used, scraper or cylinder type, or a copper-plate press.[1] When a press is specially procured, the most suitable are small models of copper-plate presses used by engravers for taking proofs. On the bed of the press, in steel, or, more frequently, in wood covered with zinc, one or two thicknesses of woollen blanket are laid of the same size as the bed. After unscrewing the tightening screw and lifting the upper cylinder by means of blocks slipped under the cylinder bearings, the bed is placed between the cylinders, taking care that its long sides are perpendicular to the common direction of the axes of the cylinders. The upper cylinder is allowed to fall back on the blanket pad, the two screws are tightened equally, and the hand-wheel is turned to engage under the cylinders at most a quarter of the length of the bed. Raising the blankets, there is then placed on the bed the following: (1) a piece of blotting-board at least $\frac{1}{2}$ in. larger than the printing paper; (2) the inked print, face uppermost, centring it correctly on the blotting-board (the edges of the print should have been cleaned, if necessary, with a wad of damp cotton-wool); (3) the printing paper, face downwards, correctly centred on the blotting-board; (4) a second blotter of the same size as the first. On this blotter the blankets are pressed down, one by one, smoothing them at the same time. The handwheel is turned, slowly but continuously,[2] till the sheets of paper are completely conveyed to the other side of the cylinder. The blankets are then lifted and the papers successively withdrawn.

690. Transfer Without Press. The transfer of the image on to its final support may be done without a press, by using, for the necessary pressure, the back of a spoon or a large modelling boxwood chisel. It is then necessary to go over every part of the image several times, crossing the paths of the tool used, frequently ascertaining the result by partially lifting the printing paper and replacing it in exactly the same position on the inked print. Not only is this work tedious for a sheet of large size, but there is a risk of the paper not falling back exactly into its original place, thus giving rise to a double image.

The work is made easier by using a drawing-

[1] For small sizes a copying press or a dry-mounting press may be used.

[2] Any stoppage under the cylinders would mark the picture.

board and placing towards one of its ends two pins fitted with wing nuts, by means of which a perfectly straight bar of wood, covered with thick felt on its under side, may be clamped on the inked print. Between the pins is slipped a zinc sheet as support, on which is placed, as in the case of transfer with a press, the inked print (the edges of which may be covered with strips of parchment paper) and the printing paper, which is covered, if required, with a protecting sheet of stiff paper. The latter is for avoiding marks of the chisel on the printing paper. The whole is screwed down under the bar of wood, leaving the essential part of the image free, so that it is possible from time to time to raise the printing paper in order to judge of the progress of the transfer and to note the parts needing accentuation.

We may add that many artists use the chisel, after press transfer but before separation of the various layers, for the purpose of increasing the vigour of blacks by transferring all or part of the ink remaining attached to the print after passage through the press.

(*j*) Various Processes

691. Ozotype. A curious variation of the carbon process was devised in 1899 by T. Manly. This process, however, has been abandoned since the introduction of the Ozobrome process described in Chapter XLIII.

A sheet of single-transfer paper (§ 652) is sensitized in a solution of potassium bichromate,[1] dried, and exposed under a negative until all the details in the image are visible. A sheet of carbon tissue is immersed for about a minute in a bath of—

Acetic acid, glacial . . .	½ dr. (3 c.c.)
Hydroquinone . . .	9 gr. (1 grm.)
Water	20 oz. (1,000 c.c.)

The print on bichromated paper is rapidly placed in this bath, and applied to the carbon tissue. The two are withdrawn together, the liquid between them is drained off, and the two sheets are left between blotting-paper to dry. After drying, they are together placed in cold water for about half an hour, after which development is done as in the single-transfer carbon process.

The chromium chromate, formed in the single-transfer paper during its exposure to light, is decomposed by the acetic acid, liberating chromic acid. This latter, absorbed by the incompletely-swelled carbon tissue, is reduced in the coating of pigmented gelatine on contact with the hydroquinone, the products of this reduction giving rise to insolubility of the gelatine; the latter, after development, remains adhering to the single-transfer paper (A. Haddon, 1901).

692. Dye Prints by Photo-mordants. A piece of fabric, well washed and dried, is impregnated with a solution of potassium or ammonium bichromate (with or without addition of ammonium metavanadate), drained, and dried at a low temperature. It is exposed under a negative till a brown image appears. It is washed until the ground is completely colourless. The image, nearly invisible, is then formed of chromium hydroxide, which can act as a mordant towards numerous dyes (see also § 624, footnote). For example, the mordanted tissue may be placed for from ten to twenty minutes in a boiling solution of alizarine, for red or violet; or of alizarine blue, orange, or black, or anthracine blue or brown, or gallein, coerulein, galloflavine, etc. (Persoz, 1857; E. Kopp, 1863; A. Villain, 1892). After dyeing, the fabric is rinsed, and the whites are brightened by washing in hot soap and water and, if necessary, cleared in a solution of sodium hypochlorite.

Instead of using ready-prepared dye, a dye may be formed by oxidation of suitable organic substances by means of the chromic acid available in the chromo-chromate, formed during exposure to light. The operation may be carried out in the cold, and this process is, therefore, applicable to sized or unsized paper. The paper or fabric is sensitized with bichromate and, after exposure under a negative, is washed in several changes of water acidified with 0·1 per cent of sulphuric acid. It is then immersed in a very dilute solution of one of the following substances, together with a little sodium bisulphite (10 to 20 gr. per 20 oz. = 1 to 2 grm. per litre of each constituent), paraphenylene-diamine, paraminophenol, pyrogallol, and other polyphenols and polyamines (E. Kopp, 1863; Andresen and Gusseron, 1899).[1]

[1] Manganese sulphate, which the author recommended should be added to this bath, has been shown to take no part in the reaction.

[1] With longer exposure, an unwashed paper may be treated under the same conditions, the colouring matter being formed at the expense of the bichromate unaffected by the light (W. Willis, 1865).

693. Prints with Diazo Compounds. Several printing processes, known under the general name of *diazotype*, are based on the destruction by light of diazo compounds[1] (products of the reaction of an iced and slightly acid solution of sodium nitrite on an aromatic amine), and on the property possessed by these bodies of producing, by coupling (in an alkaline medium) with a phenol or an aromatic amine, dyes (called azo dyes) that become fixed on cellulose (paper, cotton, etc.) without a preliminary mordanting.

These processes may be classed as follows (D. A. Spencer, 1928)—

(1) The diazo compound *A* produces when decomposing in light a substance *B*. Development is effected in an alkaline solution by a coupler *C* which gives with *A* a coloured compound that is insoluble and does not react with *B* (A. Green, C. F. Cross, and E. J. Bevan, 1890). For instance, a fabric dyed with primuline is diazotized (its colour changes from yellow to reddish) and dried in darkness. After exposure to light under a positive the image is fixed and intensified by coupling in a solution of β-naphthol alkalinized with caustic soda. A red image is thus obtained.[2]

(2) The diazo compound *A* decomposes and produces a substance *B*. Development is effected by applying a substance *C* which gives with *B* a coloured product, but does not react with *A* (G. Kögel, 1926). For instance, a paper sensitized by a diazo compound is exposed under a negative and then treated by an ammoniacal solution of silver nitrate which develops a positive image of reduced silver.

(3) The sensitizing mixture is formed by a mixture of the diazo *A* and coupler *C*, reaction being prevented by the presence of an organic acid. Such papers can be developed by exposure to ammonia vapour without fixing or washing (G. Koegel, 1916–1922), or by wetting superficially with a very dilute alkaline solution. For making copies of tracings (positive images with brown or purplish lines on a slightly tinted ground) *Ozalid* paper is commercially available, and cellophane film is sold as *Ozafilm* for copying X-ray negatives and cinema film. The process of dry development obviates any distortion of the support by wetting and consequently any variation in the scale of the copies. The ammonia must be allowed to evaporate *completely* before the copies are stored away.

(4) The diazo *A* and the coupler *C* are coated on paper after one of them has been changed into an addition compound not susceptible to coupling. Development is effected by decomposition of the addition compound by treatment with water vapour, ammonia or alkaline solution (A. Feer, 1889; F. van der Grinten, 1926).

(5) The diazo *A* is decomposed by light and a substance *D* is formed which is capable of coupling with the unchanged substance *A*, either spontaneously after a comparatively long time, or immediately by alkalinization, the copies being positives after exposure under a negative (M. Andresen, 1895; G. Koegel, 1921).

694. Other Processes. Many other processes, producing pigment images or formed of dyes, cannot be described here, even briefly. Mention should, however, be made of various processes based on the differential reactions of ferrous and ferric salts with organic colloids (§ 621), and also the processes employing the insolubilization of the gelatine of a gelatino-bromide emulsion by the oxidation products of the developer (in particular pyrogallol), when the development is done in a developer without sulphite or containing only very little sulphite (§ 350), or by using their reactions on amines or phenols, introduced in the developer[1] or in the sensitive coating, to form insoluble dyes (R. Fischer, 1912). There are also various processes based on the fact that a solution of hydrogen peroxide, acting under suitable conditions on a negative or on a gelatino-bromide positive, dissolves the gelatine in the parts where there is no silver deposit (M. Andresen, 1898).

[1] Diazo compounds as a rule are unstable in solution and form explosives when in the dry state. Hence they should be prepared only at the time of sensitizing.

[2] In all processes where the image is formed by decolorization, penetration of the sensitizer into the thickness of the paper should be avoided, since the sensitizer would then be incompletely destroyed and would give rise to a general tint of greater or less depth.

[1] For instance, violet tones would be obtained by dissolving thymol in a paraphenylenediamine developer.

CHAPTER XLIII

PIGMENT PRINTS FROM SILVER PRINTS

695. General. An image on bromide (or gaslight) paper,[1] developed to the maximum possible contrast, without fog, can be used to render insoluble either the gelatine enveloping it (or another film of gelatine in contact with it) by the action of a substance which converts the silver of the image into a salt, is itself reduced, and in turn reduces a bichromate contained in the gelatine.[2]

If it is proposed to render insoluble the gelatine enveloping the silver, the intermediate reduction product must be insoluble, so that all the reactions take place in these parts. If, on the other hand, a film of gelatine placed in contact with the silver image is to be rendered insoluble, the intermediate reduction product must be soluble, the conditions being regulated in such a way that the final reaction is not instantaneous, the soluble products "wandering" into the film to be rendered insoluble.

Of the very numerous applications of this principle we shall describe only two processes in current use in photographic practice. By variation of details of the methods, however, it is possible to obtain images by dusting-on or by absorption of dyes; also with production of prints by transfer of absorbed dye to another film of gelatine.[3]

A distinct advantage of these processes over those employing the insolubilization of bichromated gelatine by the direct action of light is the considerable reduction in time of exposure to light. Also, enlarged images, direct or reversed, can easily be obtained, if needed.

[1] Although it is possible to apply the same reactions to printed-out images, the pigment images obtained are generally of insufficient density. It is a fact that a given image density is obtained by direct printing-out with a much smaller quantity of silver than that forming in a developed image. Prints on gaslight papers frequently yield poor results in these methods.

[2] In 1892 E. H. Farmer pointed out that, by treatment with a bichromate solution, the gelatine of a silver image is rendered insoluble wherever it is in contact with the silver.

[3] Numerous processes utilizing the insolubilization of the gelatine embedding a silver image for obtaining images by absorption (with or without washing off of the soluble gelatine) are in current use for the production of cinematograph films in colours.

(*a*) The Carbro or Ozobrome Process

696. Working Methods. In the Carbro or Ozobrome process,[1] invented in 1906 by T. Manly and improved by H. F. Farmer, in 1919, a carbon print is obtained from a bromide print, by single transfer, without reversal of the original bromide print[2] as regards right and left. The result is as good as a direct carbon print in all cases where critical sharpness is not required. After rinsing and re-developing the original image in ordinary light, it can be used again for making further carbon prints, up to a maximum of about ten copies.[3]

The bromide print should be made on a paper with very hard gelatine. For this reason, semi-glossy papers, with their usually harder emulsions, are to be preferred to glossy papers.[4] Development must be carried as far as it will go. Fix in two baths, and wash very carefully.

The carbon tissue is cut to such a size that it projects at least a quarter of an inch beyond the bromide print on all sides. The latter having been previously trimmed, if necessary, is immersed for three minutes in Bath No. 1 below—(F. R. Newens, 1930).

Stock Solution No. 1

Potassium bromide . .	2 oz. (100 grm.)
Potassium ferricyanide .	2 oz. (100 grm.)
Water, to make . .	20 oz. (1,000 c.c.)

Bath No. 1 *ready for use*

Stock solution No. 1 .	20 c.c.
Water	80 c.c.

The paper taken from Bath No. 1 is applied

[1] Ozobrome is derived from the Greek word *ozos*, transfer, and brome, referring to the employment of a print on bromide paper; Carbro is formed of the first syllables of carbon and bromide (a carbon image obtained from a bromide print).

[2] Alternatively, the original print can be used as the final support of the carbon image.

[3] Some papers will give up to fifteen copies, but the number is generally limited by the formation of blisters in the gelatine of the original print. The slight increase in contrast of successive copies can be counteracted by a longer time of immersion in the No. 2 bath.

[4] The use of the special Bromoil papers (§ 698) should be avoided, as the emulsion is made of very soft gelatine.

by its gelatine surface to a sheet of glass and blotted off. It is then placed in the second bath where it remains from 15 to 40 seconds, the shortest immersion giving contrasty images and the longest immersion soft ones.[1]

Stock solution No. 2

Potassium bichromate .	350 gr. (40 grm.)
Chromic acid . . .	350 gr. (40 grm.)
Chrome alum . . .	2 oz. (100 grm.)
Boiled water, to make .	20 oz. (1,000 c.c.)

Bath No. 2 ready for use

Stock solution No. 2 .	20 c.c.
Boiled water . . .	$2\frac{3}{4}$ oz. 32 min. (80 c.c.)

If the water used for diluting Bath No. 2 has not been freed by boiling from most of its lime salts, it would be necessary to increase slightly the amount of stock solution in this bath.

Bath No. 1 can be used a great number of times, provided it is occasionally filtered; Bath No. 2, which is subject to continuous alteration by additions from the first bath, must be renewed frequently, at least once during each spell of print-making.

In the meantime, the bromide print, previously soaked in water until the gelatine is completely swelled, is placed face upwards on a sheet of glass.

The carbon tissue, on removal from bath No. 2, is laid with its gelatine surface against the silver image, leaving a uniform margin all round. Excess of liquid is rapidly removed with a squeegee, avoiding any shift of the two surfaces in contact (which may give rise to *double images*). The two papers are removed together from the glass, and left for a quarter of an hour between damp sheets of parchment paper (vegetable parchment). During this time a sheet of single transfer paper (§ 652), cut a little larger than the carbon tissue, is immersed in water for three to five minutes (according to its thickness). It is then placed on a sheet of glass, gelatine-coated face upwards. The bromide print, now bleached, is gently detached from the carbon tissue, and placed in water; the carbon tissue is applied to the transfer paper, gelatine to gelatine, and contact obtained by pressure with a squeegee. The whole is left under pressure between damp blotting-paper. Washing off is then carried out (§ 654), in which, however, a temperature of 95° F. should not be exceeded, since the pigmented gelatine which is to form the final image is not rendered so completely insoluble as in the case of the direct carbon process.

The bromide print is washed in several changes of water, for at least 20 minutes, before being fully re-developed in ordinary light; this re-development may be postponed, the re-developed image being then washed without fixing.

Various formulae have been published for replacing the two successive baths Nos. 1 and 2 above-mentioned by a single bath, but these do not allow of so much control of contrast, and the prints successively obtained from the same silver image become more and more contrasty, the density of the shadows increasing whilst the details in the high-lights progressively disappear.

697. Theory of the Carbro Process. The potassium ferrocyanide formed during the action of the mixture of potassium ferricyanide and potassium bromide (§ 588, footnote) on the silver constituting the original image reacts slowly with the bichromate, reducing the latter to chromic compounds which insolubilize the gelatine (§ 636), whilst the ferrocyanide reverts to ferricyanide.[1] A small fraction of the silver is attacked directly by the bichromate after immersion in the acid bath, but the chromic compounds arising from this secondary reaction insolubilize the gelatine of the bromide paper *in situ*, and cannot contribute to the formation of the final image; the fact that this reaction removes a certain fraction of the silver from participation in the fundamental reaction explains the reduction of the contrast of the final image when immersion in the acid bath is prolonged.

The favourable effect of the acid in the matter of the preservation of the gradation of the high-lights appears to be as follows (F. J. Tritton, 1926): The very hard gelatine of the bromide print has swelled to the maximum

[1] The optimum duration varies slightly according to the paper.

[1] An image, which would, however, have very faint details in the lights, would be obtained by impregnating the carbon tissue, before contact with the silver image, with a solution containing only ferricyanide and bromide, and then placing it, before transfer, in a solution of bichromate.

The formation of an intermediate soluble product, capable of diffusing from one layer to the other, is obviously not necessary in the case of papers whose sensitive layers contain both the silver bromide which forms the provisional image and also the coloured pigment forming the final image by an analogous process (J. Mézaros, 1905; V. Vaucamps, 1907). Such papers have been manufactured for some years in Germany (1908).

possible extent during its long immersion in water before being placed in contact with the carbon tissue. The soft gelatine of the carbon tissue, on the other hand, immersed for a short time only in a neutral bath, and then, at the last moment, in an acid bath which favours swelling, does not have time to swell much; its swelling therefore continues after it has been applied to the silver image, at the expense of the water contained by the latter, which is thus attracted, by a species of suction, towards the layer of coloured gelatine. In this way, the diffusion of the potassium ferrocyanide formed in contact with the silver is directed towards the carbon tissue, in a direction normal to the surface of contact, and this is the reason why there is no appreciable loss of sharpness, as would necessarily be the case if the diffusion were not directed. It has also been found that the images are much less vigorous and sharp if the bromide paper is slightly swelled and the carbon tissue much swelled at the moment of placing them in contact.

By producing a very slight superficial tanning, the formaldehyde facilitates the insolubilization of the gelatine by the very small quantities of chromic tanning agents produced in the details in the high-lights of the image. Finally, the acetic acid provided for in some formulae allows the gelatine to swell without promoting excessively the direct action of chromic acid on the silver, as hydrochloric acid does.[1]

(*b*) The Bromoil Process

698. The Bromide Print. The conversion of a bromide print into an image in greasy inks was described by E. J. Wall and C. Welborne Piper in 1907.

The bromide papers prepared specially for this process have a thick layer of emulsion, made with a very soft gelatine; failing these,[2] ordinary bromide papers can be used, provided choice is made of those with a gelatine which gives good relief on swelling. It is well to choose matt papers on a stout, smooth base, with a coating able to stand transfers. For one thing, matt papers, as a rule, do not have the over-coating of gelatine used with the emulsion of glossy papers to protect it from abrasion (§ 548); for another, matt emulsions contain starch grains, which, on wetting, do not swell so much as the gelatine, and thus produce a granulation of the surface of the gelatine which greatly facilitates inking.

The lightest tones of an ordinary image on bromide paper do not usually come out in the final inked image, whereas the heavy tones are distinctly accentuated. Hence the working conditions must be adjusted, so that the tones of the silver image range from a clear grey to a deep grey, and not from white to black. To obtain such an image, of sufficient depth and with only slight contrasts, ample exposure must be given with short development, but all fog must be avoided, as this would reduce the swelling.

For the same reason, old developer should not be used, since the oxidation products of development may cause a slight general tanning of the gelatine (§ 350). If a tanning developer (e.g. pyrogallol) is used, the quantity of sulphite needs to be increased in order to confine the hardening action to the gelatine of the image.

In order to allow of the maximum swelling of the gelatine after wetting and before inking, the silver forming the image should extend, at any rate in the blacks, the whole depth of the emulsion. An aid to this is the use of relatively[1] short development, in a slow-acting developer, of a fully-exposed image, or, better still, an acid diaminophenol developer (§ 386), much appreciated by some workers.

Fixing can be done in a bath acidified with

[1] Analogous phenomena have been utilized by O. Gros and Ostwald (1901) in a process called *Katatype*; the reduced metal of a platinum image (§ 630) was employed to catalyse a reaction between various compounds impregnating the carbon tissue.

To this process may be connected the phenomenon sometimes observed of the formation of an image on a paper covering a photograph (sometimes even through a tissue paper fly-leaf which shows no trace of image) formed of silver, silver sulphide or platinum. The yellowish brown transfer, of very variable depth, seems to be due to oxidation of the resin used in sizing the paper, this oxidation being catalyzed by the very finely divided substance forming the initial image.

[2] It cannot be too strongly emphasized that beginners should use the special papers for their first attempts.

[1] If, for example, one uses the diaminophenol developer suggested in § 563, diluted preferably with an equal quantity of water, the optimum duration of development at 60° F. will be about eight times the period of the appearance of the first details instead of twelve times, which is the best factor for prints to be kept as such. This value of the Watkins "factor" would have to be slightly increased in a warmer bath, and slightly reduced in a colder bath. The time of exposure required by shorter development (§ 557) and the use of a dilute developer result in an image not confined entirely to the external coating of the emulsion, but spread through a greater depth, the tanning affecting, in these conditions, a larger quantity of gelatine; hence a greater difference in level between the raised and recessed parts of the swelled print.

sodium bisulphite; the hardening of the gelatine thus produced lasts only a very short time. The fixing bath must on no account contain alum, which would reduce the permeability of the gelatine, and, consequently, its swelling.

699. Bleaching the Image. The various methods proposed to ensure the tanning of the gelatine at the points where it encloses the silver of the image, in the course of which the image is bleached by conversion of the metallic silver into silver bromide, give practically the same results.

Bleaching may be done as soon as the print has been washed free from hypo; or it may be done after drying, in which case the operation may be postponed to any convenient time. Excellent results have been obtained on bromide prints several years old.

It is usual to employ for this operation a bath containing cupric bromide (or an equivalent mixture of potassium bromide and copper sulphate)[1] and a bichromate or chromic acid. The use of an acid bath, sometimes recommended for bleaching prints with excessive contrasts, tends to induce, by dissolution of the cuprous bromide or chloride and distribution of this salt throughout the layer, a general tanning of the gelatine; subsequent swelling, and, therefore, inking, is then much more difficult. The most that should be done is to add a trace of acid to a very hard water in order to neutralize it, but it would be better to use boiled water. Amongst others the following bath may be used, prepared only at the moment of use in sufficient quantity for the treatment of one print, and made fresh for each succeeding print—[2]

10% solution copper sulphate	5 oz.	(250 c.c.)
10% solution potassium bromide	10 oz.	(500 c.c.)
1% solution potassium bichromate	2 oz.	(100 c.c.)
Water, to make	20 oz.	(1,000 c.c.)

In this bath the image gradually weakens, and in a few minutes disappears almost completely[1] if the bath is not too cold nor the blacks too dense. Wait until bleaching is complete before removing the print, and in any case keep it in the bath for at least 4 minutes to prevent irregular action.[2] If bleaching takes more than five minutes the bath is probably exhausted and should be replaced by a fresh one.

The bleached print is washed in several changes of water until the water is no longer coloured. It is then placed in a very dilute bath of sulphuric acid[3] (about 1 per cent) in which the last traces of the image disappear, the only sign left being a slight relief of the high-lights. A more concentrated bath weakens the tanning of the gelatine, especially in the high-lights, as does also a bath of hydrochloric acid. Then follows a further washing in several changes of water.

The print contains, in the state of silver bromide (liable to darken in light), the whole of the silver which formed the original image. Darkening of this silver bromide would produce a double tone in the image and would handicap the inking of the prints to be transferred. It is, therefore, best to dissolve this silver bromide in a fresh fixing bath (solution of hyposulphite, alone or with the addition of bisulphite but with no alum). After the usual washing, the print should be put to dry. This drying allows the gelatine to stiffen and prevents various failures in the inking process.

700. Swelling of the Image. Inking must be preceded by a swelling of the gelatine, causing the image to appear in bas-relief. The best results are generally obtained with the maximum degree of relief.[4] The process can be carried out indiscriminately on a print which has just been bleached, washed, and dried, or on an old print even one several years old.

To ensure the proper degree of swelling, it is usually sufficient to leave the print in cold water

[1] The substitution of sodium chloride for potassium bromide only slightly modifies the results (H. D. Murray and D. A. Spencer, 1933).

[2] For the sake of using the chemicals to the full, when treating a large number of prints, the bleaching of the image and the tanning of the gelatine may be done in separate operations by successive immersion in the two baths (H. J. P. Venn, 1926) given below, which keep indefinitely, and which may be used a great number of times, even at long intervals—

A	10% solution of copper sulphate	19 parts
	10% solution of potassium bromide	1 part
B	10% solution potassium bromide	2 parts
	1% solution potassium bichromate	1 part
	Water, to make	10 parts

[1] The image leaves a brown or greenish residue, which is of no importance.

[2] Some writers recommend that bleaching should be done in a weak light, but there seems no object in doing so.

[3] See footnote to § 364: precautions to take when handling sulphuric acid.

[4] For a long time it was believed that inking up could not be effected satisfactorily except on very much swollen gelatine with a marked relief. Some bromide papers specially prepared for bromoil work ink up perfectly after a very short soak in tepid water which does not produce much swelling, and the image is visible only through the contrast between the matt portions (shadows), and the glossy portions (high lights).

for several hours, or in tepid water (80° F. to 95° F.) for a quarter or half an hour. It is also possible to hasten the swelling with a solution of ammonia (4 per cent to 10 per cent of ammonia), the print being rinsed afterwards in cold water. Finally, if a transfer press is available (§ 689), the wet print may be pressed between two pieces of dry blotting-paper, the print thus acquiring, on re-wetting it, a more accentuated relief, according to the number of times it is put through the press (§ 687).

701. Inking, Finishing, and Transfer. The inking of Bromoils is done as for gelatine-coated papers (§ 685), but usually a slightly softer ink is used.[1]

Inking is rendered more difficult according as development of the bromide print has been forced (higher Watkins factor). On the other hand, if development is incomplete, the gradation will be deficient and much detail lacking.

As already noted (§§ 686–690), prints may be de-greased or also used for transfer. Bromide prints intended for transfer must have been printed reversed, preferably by projection.

[1] Bromoil is sometimes used to obtain lithographic transfer prints, especially for printing enlarged half-tone prints (posters). Inking is then carried out with transfer ink suitably diluted and applied with a roller, the excess of ink being removed from the whites by slight rubbings with a pad of cotton wool moistened with water.

Mention may be made of the possibility of dissolving the gelatine in the whites of a Bromoil by treating it with very dilute solution of sodium hypochlorite (G. Underberg, 1925). This process inevitably causes a certain eating-out of detail in the high-lights.

Finally, mention may be made of the possibility of transferring ink impressions in succession on to the same sheet of paper. The same bromide print may be used, or several prints from the same negative, and the inks may differ only slightly in colour, but be of varying consistencies, for double-tone effects, or may be of different colours for multicolour effects. Such effects are admissible only when they are perfect, and it is therefore necessary to be sure of one's ability before attempting work which is, as a rule, successfully accomplished only by those able to achieve the results without any photographic base at all.[1]

[1] A variant of the traditional bromoil methods was patented by F. F. Renwick and F. J. Shepherd (1932), involving the use of a bromide paper with an emulsion hardened to a maximum during manufacture. Development is stopped in a weak acid bath (borax and boric acid) and the bleaching bath is kept at the same acidity. This avoids the difficulties often due to a local accumulation of calcium salts during intermediate drying. Fixing is done once only, after bleaching, and is followed by washing and drying. The ink is applied with a roller, either to a dry print or to a print swollen with water containing glycerine. The excess of ink is removed under water by means of a felt roller covered with rubber. If necessary, final touches are given by inking with a brush.

CHAPTER XLIV

FINISHING AND WORKING-UP PRINTS; TRIMMING, MOUNTING, RETOUCHING AND COLOURING

702. General. Trimming must obviously remove the edges of the print, which are often defective, owing to gelatine having separated, finger marks, etc. It gives the print a neat appearance, and should also remove unnecessary portions which are without interest or disturb the unity and balance of the composition. It is very rare that the arrangement of the picture on the plate is perfect and that the standard sizes of the sensitive materials, negative or positive, include the subject to the best advantage. There are few photographs but will benefit by judicious pruning.

The purpose of mounting is not merely to protect the print from the friction and wear to which a thin paper is exposed; it aims also at setting the print apart from its surroundings, so that a spectator can concentrate his attention on it. "The object of a frame is to place round the work an area of restful lines, in quiet tones, which isolate it from the coloured confusion of the walls; the prime quality of a frame is unobtrusiveness" (C. Puyo, 1903).

Neither the paper nor the card which forms the background, nor the frame, can greatly improve a photograph, but it is equally true that they can, when badly chosen, do it a great amount of harm. The mounting of a print should therefore be studied, from the point of view of avoiding a commonplace and also an extravagant effect.

703. How Much to Trim. The amount of picture to be trimmed away is best found by trial, using two L-shaped pieces cut out of thick paper and marked with a scale of half-inches, the numbers starting from the angle, so as to be sure of forming a rectangle. This preliminary study of the picture may result in sacrificing a relatively large portion of it. It is, therefore, well to carry out this trimming as soon as the first print[1] has been taken from a negative, for in this way it may be seen at once if a smaller size of printing paper may be used for succeeding prints, or if it would be better to make the prints by enlargement.

[1] It is specially advisable to do this if it is wished to print with a white margin or toned border (§§ 512–513).

In doing this, the general rules of artistic composition should be followed, and attention paid to the following points.

In the case of a profile or three-quarter-length portrait the head should not be centred on the vertical axis of the trimmed print; more space should be left on the side towards which the model is looking. In the case of half-length or full-length portraits, the trimming will have a great effect on the apparent height of the sitter, who is dwarfed if the photograph is trimmed at a point far above the head (this is the usual way of trimming children's portraits). On the other hand, the height of a figure appears greater if the print is trimmed close above the head.

In photographs of architecture, landscapes with monuments, or industrial subjects, the trimming of the print should depend entirely on the vertical lines of the subject. Never depend on the horizontal lines, which, one knows, are not generally parallel with the horizon. If the picture has not been properly registered on a vertical plate, and if, consequently, the images of the various vertical lines cannot be parallel to each other (§ 931), choose judiciously an average vertical line, so as to distribute the error; trimming in parallelism with one of the vertical lines nearest to one of the sides will give the verticals on the other side an exaggerated obliquity.

Landscape often includes no vertical lines at all. In this case one is guided preferably by water (the apparent horizon of a seascape or a panorama, lakes and rivers), or by the average perpendicularity of trees. Failing such indications, trimming is done so as to render the perspective of the picture to the best advantage.

Having decided where to trim, mark the lines on the print with a hard, finely-pointed pencil, or, at least, mark the corners of the rectangle which the trimmed print is to form.

For the sake of variety in a collection, or to cut out part of a defective print, photographs are sometimes trimmed to circles or ovals (ellipses). Such fancy trimming, however, should be used with restraint. A profile head may suitably be trimmed to a circle, after the manner

of a medallion, or a half-length portrait may be cut to an oval.

Professional portrait photographers for many years bound themselves to the exclusive use of a certain number of standard sizes, enumerated below, but from which, in recent years, they have cut completely adrift, at least as far as concerns the outside size of the mounts—

Name	Size of print	Size of mount (close up)
	inches	inches
Midget . . .	$2 \times 1\frac{3}{16}$	$2\frac{5}{16} \times 1\frac{5}{16}$
C.D.V. . . .	$3\frac{1}{2} \times 2\frac{5}{16}$	$4\frac{1}{16} \times 2\frac{1}{2}$
Cabinet . . .	$5\frac{5}{8} \times 4\frac{1}{16}$	$6\frac{1}{2} \times 4\frac{1}{4}$
Promenade . .	$7\frac{3}{8} \times 3\frac{5}{16}$	$8\frac{1}{4} \times 4$
Boudoir . . .	$8 \times 5\frac{1}{4}$	$8\frac{1}{2} \times 5\frac{1}{2}$
Imperial . . .	$9\frac{1}{2} \times 6\frac{5}{8}$	$10 \times 6\frac{7}{8}$
Panel . . .	$11\frac{1}{2} \times 7$	$13 \times 7\frac{1}{2}$

704. Trimming. The trimming of prints is usually done with a shearing blade or cutter,[1] operated by hand or foot. The usual pattern is one in which the cutting blade is fixed to a base on pivots which allow it to swing to and fro slightly. The print is placed on a bed which butts against the blade by the operation of a spring. On the bed being pressed down against the cutting edge of the blade, any margin of print projecting from the bed is cut cleanly off. Those models are to be preferred which comprise a squared guide or a bed ruled in squares, the object, in either case, being to ensure rectangular corners when trimming. The alternative means is to use a cutting tool, guided by a rule or set-square of glass or steel.[2]

For this is used either a bookbinder's knife, fixed in a handle with a tightening screw, or a penknife, or a vaccination lancet in the form of a pen mounted in a stout penholder. Whatever may be the tool chosen, it should be frequently sharpened on an oilstone.

The transparency of trimming shapes and set-squares of polished glass is an advantage, but there is always a risk of their slipping over the print during cutting. Moreover, there is no need to see the picture if the cutting line has been determined beforehand (§ 703). Ground-glass set-squares, which are sometimes used, have no advantages over those of steel. In order to prevent steel rules and set-squares from slipping over the print it is a good plan to roughen the under side with glass paper or emery cloth. Rules and set-squares made of wood or ebonite should not be employed; they are liable to get chipped and so be rendered useless.

When photographs are trimmed to a certain number of set sizes[1] one uses a cutting shape made of glass[2] or metal (usually zinc). The glass shapes are generally made with roughened or ground surfaces, with or without a squared scale, to facilitate placing in the correct position. The metal shapes are generally made in the form of a mask, the cut being made along the inside edge.

For trimming, the print should lie on a flat bed, soft enough to avoid the necessity for frequent sharpening of the tool. The best cutting beds are those of wood, made with the surface at right angles to the grain of the wood, as is done in the case of butchers' blocks; cuts made by the trimming knife thus disappear on wetting with water. Sheets of roofing zinc are often used (if new, they should be roughened to prevent slipping). The disadvantage of glass is that it very quickly blunts the tools. Again, the bed may be a sheet of cardboard or a pile of waste sheets of paper.

For trimming with a shape it is convenient to use a trimming table, consisting of a board turning freely on a vertical axis.

Trimming to a circle[3] or oval is usually done by means of glass or zinc shapes, which may be bought in various forms and sizes; a wheel-cutter is used with them. The wheels are not usually re-sharpened, but are replaced as needed.

Prints may be trimmed wet, using glass shapes and a wheel cutter, laying the prints face down on the glass.

Trimming with the deckled edges sometimes adopted for prints with wide margins on coarse-grained cards, and obviating the necessity of mounting on cardboard, is often done by the

[1] With some trimmers, specially designed for trimming prints with a narrow white margin, there is an adjustable arrangement ensuring automatically that each cut is made at a constant distance from the (masked) edge of the picture, this distance having previously been set by a register stop.

[2] Bevelled rules or set-squares should not be used as the cutting tool is liable to slip to the fingers holding the instrument down on the paper. Trimming with scissors demands great steadiness of hand and eye, and is rarely done.

[1] A stamping machine is sometimes used.

[2] Glass buttons fastened to the glass stencils with silicate to serve as handles usually come off as soon as used; wooden buttons cemented into a hole in the centre of the glass are preferable.

[3] For cutting circles, special compasses can be obtained. The cutting of a circle or an ellipse can also be done directly by ellipsographs similar to those used by picture-frame makers for cutting glass. Trimming with scissors only gives disastrous results.

manufacturer of the sensitive paper, the sheets being left as they are, precautions being taken not to damage the edges.[1]

Photographs printed in large numbers are, preferably, cut up in piles on a guillotine. For this it is necessary that the various sheets are piled in such a way that the pictures are exactly superposed, either by bringing two sides of each sensitive sheet against fixed studs when printing them, or by punches on the bed of the printer by which each sheet is perforated, these perforations allowing of the finished prints being registered on the bed of the cutting machine.

705. Choice of Mounts. In choosing mounts for prints there are various points to be considered.

In mounting silver prints with an aqueous paste, it is very important that the mounting board should be free from hyposulphite,[2] which is liable to spread into the print before the paste is dry, and to affect the image in time. In the same connection, the use of cards with bronzed (imitation gold) lettering should be avoided; the print may be defaced by particles of metal adhering to the card.

Cards used in wet mounting should be capable of resisting the tendency to curl as the print dries,[3] unless prints are afterwards to be hot-burnished.

When the prints are to be framed "solid" or "close-up" in wood frames (the mount not showing between the picture and the frame), the colour of the mount is of no consequence, but in all other cases the texture and the colour of the mount must be considered. From this point of view, very useful information may be gained from a careful study of engravings, charcoal drawings, red crayon drawings, and other works of art in monochrome in museums, exhibitions, and in the windows of picture-framers. In a matter where taste and personal preference play the chief parts, it is obviously impossible to lay down hard and fast rules, but a few hints may be given with advantage.

The mount should never be glossy or of bright colour. It must be remembered that a dark mount makes the lights of the picture look lighter, and, inversely, that a very light-coloured mount will increase the apparent depth of the blacks.[1] The tones of the picture in relation to the mount may be made effective either by harmony or contrast, but colour contrasts are to be avoided if the picture is not in itself of considerable vigour. Blue tones (and blue-blacks), as well as browns, lend themselves generally best to an harmonious combination with the mount; red and reddish tones will stand either harmony or contrast (for example, yellowish, greenish, or grey-blue mounts); pure black tones suit mounts of almost all shades. When there is any doubt, a neutral grey should be chosen; this tone suits any colour of the picture. It is often sufficient to have a narrow border, separating the picture from the mount, in order to modify their mutual effect.

Fortunately, the use of variegated and ornamental mounts, always in bad taste, has been abandoned. Dry-mounting methods, allowing the use of thin mounts, have provided photographers with matt or rough papers of the many shades used for magazine covers and in modern high-class printing,[2] in addition to drawing papers. When not used alone, such papers may be pasted to the cardboard (e.g. with starch paste) under suitable pressure. It is also possible to use fabrics pasted on card or, in the same conditions, leaves of wood veneers: rosewood, olive, walnut, etc.

Thin papers, especially in dry mounting, may be used with very pleasing results in *multiple mounting*. By backing the print with a series of progressively larger mounting papers of varying size and tone a series of borders is produced. The result is similar in effect to that

[1] For trimming in this way by the worker, after finishing the prints, the use has been suggested of a saw blade, at least 12 in. long, and of a metal plate, one edge of which is bevelled (or, better still, round-chamfered). The print is placed on the metal plate, the edge to be cut projecting over the upper edge of the bevel; the saw blade held in the hand is then passed obliquely along the bevelled plate (S. Jasienski, 1925). Shears cutting a deckled edge are now sold, and this is much to be regretted in view of the excessive use of deckling with small prints on glossy paper.

[2] Hyposulphite of soda is used in the manufacture of paper to destroy excess of hypochlorites used in bleaching pulp.

[3] In France thicknesses of cardboards are generally defined by the numbers of the Paris gauge, viz.—

No. of the gauge	P or O	1	2	3	4	5	6	7	8	9	10	11	12
Tenths of millimetres	5	6	7	8	9	10	11	12	13	14	15	18	19

[1] It is easy to see for oneself that two squares cut from the same piece of grey paper appear to possess very different depths of tone when placed respectively on a light grey mount and a dark grey mount.

[2] Commercial nomenclature for the sizes of these papers is as follows—

Medium	18 in. × 23 in.
Royal	20½ in. × 25½ in.
Double crown	20½ in. × 30½ in.
Demy	17¾ in. × 22½ in.
Double cap	17 in. × 27 in.
Large post	16½ in. × 21 in.
Imperial	22 in. × 30 in.

obtained with wash and line[1] on the cut-out mount used for framing engravings and water-colour drawings. A warning may be given against allowing the different borders to follow each other in order of depth of tone.

Before deciding on a mount, the print should be placed in conjunction with papers of different tints, more or less deep, so as to find the one that shows the picture to the best advantage. In choosing colours, beware of those which show differently in more or less yellow artificial light.

Mention may be made of the *passe-partouts* of fixed size, which consequently rarely suit the subject to be framed, except in the case of the professional portrait.[2] Finally may be mentioned the use, as mounts, of panels of veneer wood (for pictures of very large size), or of stout canvas (photographs used by commercial travellers).[3]

706. Placing the Picture on the Mount. A picture placed precisely in the centre of a mount will always appear to be too low. It is a tradition almost universally accepted that if the greater dimension of the mount is the vertical one, the upper and the side margins should be the same width, and distinctly narrower than the depth of mount below the print.[1] If, on the contrary, the larger dimension of the mount is horizontal, the lower margin and the side margins should be equal to each other, and the space above the print of distinctly less depth.

Lateral centring of the print is facilitated by the use of a divided rule with the zero in the middle, the two sides being numbered symmetrically (V. Jobling, 1919).[2]

As a general rule, the margins are relatively much larger for a small print than for one of very large size.

In multiple mounting, use is made alternately of bands of very unequal width, some being so narrow as to be merely lines. For example, the picture may be separated from the outer border (which is always the largest) by a line and band, or a line between two bands, or a band between two lines. Trials may be easily made on one of the corners of the picture, the successive mounts being applied so as to show the final appearance along two sides only of the picture.[3]

707. Various Methods of Fixing the Print on the Mount. For many years the fixing of photographs on to their mounts was done with starch paste or, sometimes, gum arabic. The inconvenience of this method is that the print expands before being applied to its mount by the moisture of the paste, and thus becomes distorted in shape, since the expansion takes place entirely at right angles to the fibres of the paper (§ 613), and persists after drying. Moreover, the strain put upon the card by the print tends to curve the whole, the print then appearing on a concave mount, unless steps are taken to prevent this curling or to remedy it.

For mounting glazed or enamelled photographs (§§ 614 and 615) a narrow edging of thick rubber solution may be applied to the print,

[1] Interesting effects may be obtained on light, smooth mounts by a toned border applied by means of an air brush (§ 722), as follows: The print is laid flat on a table and covered with a rectangle of stiff paper (trimmed with the print) covering the picture exactly, and is held in place by a strong glass plate (window glass or trimming shape), forming a paper weight. A rectangular mask cut out of stiff paper is centred exactly round the picture so as to expose only the part to be tinted; this mask is held in place by four strips of strong glass, placed very near the edges (the same set of four strips suits very varying sizes if suitably placed). Then a very light tint of grey or bistre is laid on. If thought well, this border may be completed by a border-line done with the drawing-pen in the same colour but a deeper tone. It is well to protect the mount from any contact with the steel rule (used for the lines) by covering each time with a piece of white paper the portion under the rule. The masks and counter-masks should be kept in proper order near the work table.

[2] For attaching prints without the use of an adhesive, gummed fasteners are sometimes fixed to the mount; they have slits into which the corners of the print are slipped.

[3] The albums sold for collections of photographs are very frequently unsuitable for individual requirements. In such a case one may make an album for oneself by taking the sheets on which the prints have been mounted to a bookbinder; or, simpler still, the various sheets may be united by a cord, and a cover may be made of two pieces of cardboard (covered with paper or fabric), piercing in each two holes by means of a punching machine. In this case the punching machine must be fixed to a board on which have been screwed wooden blocks, forming stops, so that the perforations may be always made in the same places. As regards albums bought ready-made, choose those with removable leaves, which give the collector more liberty in mounting his prints.

[1] This rule applies even in the case—which is rather exceptional but sometimes quite good—of a picture mounted lengthwise on an "upright" mount The depth of the lower margin should differ very little from the height of the picture itself.

[2] It is sufficient to cover the numbering on a 12-in. rule with a band of paper, and to mark the new scale on this band.

[3] The under-tints frequently harmonize best by resemblance one to another when at least $\frac{1}{2}$ in. wide; narrow edges usually harmonize best when they contrast with the average depth of the picture and the colour of the mount.

there being then no moisture to impair the brilliancy of the surface.

In course of time, dry-mounting came into use. In this process thin sheets of gutta-percha (manufactured for waterproof dressings) have been used, but the usual " tissue " is thin paper (" onion skin " or foreign post paper), impregnated on both surfaces with a preparation of shellac. The sheet is placed between the print and the mount. In either case, pressure of the whole at a sufficiently high temperature melts the gutta-percha or the shellac, thus ensuring perfect adherence of the print, without distortion of the image or curling of the mount, and with the additional advantage that the print is isolated from the mount and its possible impurities by an impervious coating. Also that the print may at any time be detached by subjecting it to a temperature slightly higher than that used for mounting.[1]

More recently it has been the custom to attach prints on their mounts only by the upper edge, which gives the print no protection at all against being rubbed or torn. When this method of mounting is adopted by professional photographers it is customary to use a mount whose horizontal dimension is twice the ordinary width, and which is folded over on the print (*folder mount*) so as to provide it with a protecting wrapper.

708. Mountants. Adhesives for mounting photographs must not contain either acid (found in many liquid office pastes), which would deteriorate the print or alter its colour, nor hygroscopic substances (e.g. glycerine), which, by keeping the print slightly damp, renders it liable to be affected by atmospheric agencies.

These conditions are fulfilled by freshly-prepared starch paste, which is specially suitable for thin papers, and by dextrine, which is thicker and more adhesive, and is suitable for thick papers.

In exceptional cases use is made of a solution of gum arabic, or of strong liquid glue (the kind usually sold in tubes for domestic purposes), or of rubber solution (mixture of parings of unvulcanized rubber sheet in rectified benzol) of the consistency generally used for pneumatic tyre repairs.

[1] Mention may also be made of the use of thin papers, gummed on both sides. These are moistened with water, either all over, or only along the upper edge. There are also the gummed frames, which, after being wetted, are laid on the borders of the print (which needs no trimming) and then on the support, the print being thus enclosed.

To prepare starch paste, about 2 oz. (100 grm.) of rice starch are mixed with 2 oz. (100 c.c.) of water (preferably in a mortar), making a thick cream, without lumps. This is poured slowly into about 5 oz. (250 c.c.) of boiling water, which is kept boiling while the mixture is stirred with a spatula or wooden spoon until it turns to a bluish translucent liquid, which thickens on cooling.[1] Whilst the mixture is still warm about 1½ gr. (0·2 grm.) of salicylic acid or of thymol may be added to it, to retard slightly the spontaneous liquefaction, which, otherwise, begins in a few hours. The paste should be filtered while warm through a piece of fine linen, so as to remove lumps and any extraneous matter.[2]

Dextrine paste is a thick, white, opaque mountant, which keeps indefinitely and is much used in offices. It is made by bringing about 20 oz. (1,000 c.c.) of water to a temperature of about 176° F. (this temperature should be maintained throughout the operation); in this is mixed 10–12 oz. (500–600 grm.) of white dextrine, adding a little at a time, and maintaining the temperature until a translucent liquid is obtained; to this is added about 10 gr. (1 grm.) of thymol. It is filtered through fine linen and put into pots, closed at first only by a piece of linen. At the end of a few days the mixture becomes thick paste; the pots may then be corked. For use, the paste is thinned with a very little water, about as much as the brush will hold.

Solution of gum arabic is prepared with the pale gum, roughly broken up and hung in a small muslin bag, in its own weight of warm water, with the addition of about 0·1 per cent of thymol. When completely dissolved it may be filtered if necessary.

For mounting by the edges, or by the upper edge only, liquid adhesives in tubes may be used, thinned, as required, with a little water, this glue being run round the print (Fig. 186) by means of a small oilcan (N. E. Nilson, 1925).

709. Full Mounting. Mounting is done with a fairly stiff hog-hair brush, of the flat, " fish-tail " type. The brush, once charged with the necessary amount of mountant, should not be put

[1] The adhesive power of the starch can be greatly increased by dissolving in it, while still hot, about 25 to 35 gr. (3 to 4 grm.) of gelatine, previously well swelled in cold water.

[2] It is also possible to use the soluble starches such as are supplied for pasting wallpaper. The paste is made by mixing the dry powder with a little cold water, and it keeps very well if an antiseptic, especially a very small amount of formaline, has been added to the water.

back into the paste, nor should it be left so that the hairs pick up dust or soil the work table. In the handle, as near as possible to the metal binding, may be screwed small wooden pegs, the end of the handle being weighted with lead, so that, when the brush is laid down, the hairs are kept out of contact with anything.

The prints to be mounted are soaked for a few seconds in water, and piled face downwards on a glass (obviously this method is not suitable for glazed (stripped) prints, which must be mounted dry by means of an edging of stiff mountant). The top print is then coated with mountant. The print is then lifted off and at once laid in its place on the mount;[1] it is then covered with a piece of hard paper, and contact is ensured by pressure from the centre outwards with a linen pad or a rubber roller squeegee.[2]

To keep the mount flat during the drying of the print, the mounted photographs are piled, face down (placing the first on a piece of blotting-paper or very clean ordinary paper), with a weight on top. Also, while drying, they may be curved in the contrary direction by slightly springing them between pairs of wooden strips nailed to a board, the distance between the strips being a little less than the width or height of the cards.[3]

For mounting on canvas, the canvas should first be stretched on a stretcher frame (similar to those used for oil paintings). The print is laid face down on a glass slab and mountant applied to the back. The canvas is then laid on, firm contact ensured, the glass removed, and the print and canvas are left to dry, the canvas not being taken off the frame until completely dry.

710. Burnishing. Burnishing was largely practised in the days of albumen papers, both for flattening prints which had curled through wet mounting and for slightly increasing the gloss of the print. It is now almost abandoned, and, in any case, it can be used only on glossy or smooth papers.

In carrying out the operation, the print is hot-rolled under pressure by means of a heated cylinder, its surface having been soaped with a woollen wad, rubbed over a cake of very dry soap (or moistened with an alcoholic solution of soap), or waxed with a flannel rag rubbed over a piece of wax (in which is incorporated, by melting, a little mastic). The rolling must be done without jerking or stopping, otherwise marks will be left on the print. The operation is generally repeated two or three times, pressure being increased each time.

711. Dry-mounting. Dry-mounting, by means of adhesives with a shellac base, is suitable for all papers the gelatine coating of which has been hardened by alum, provided both print

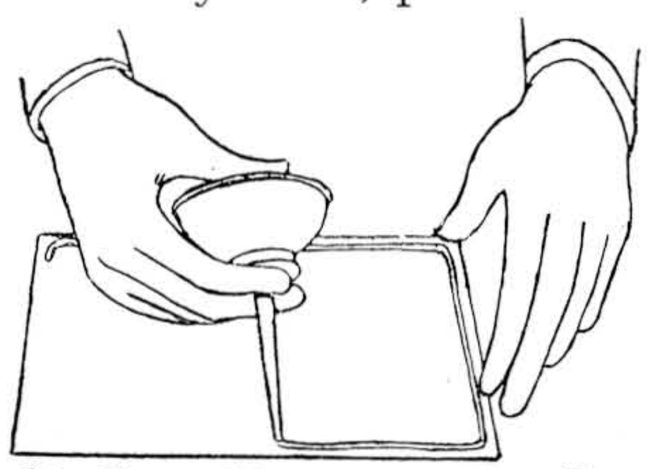

FIG. 186. EDGE MOUNTING WITH FISH-GLUE

and mount are perfectly dry. In the case of rough papers, however, there is a risk of the grain being somewhat crushed. Gum-bichromate prints, even when treated with alum, do not usually stand dry mounting; prints in greasy ink, previously deprived of grease, and also transfer prints (after about eight days) may be dry-mounted without difficulty.

For ordinary work, dry mounting is done in a press, the upper plate of which may be heated to about 175° F., as indicated by the thermometer.[1] Presses of " swan-neck " pattern, which permit of the insertion of prints and mounts of any size, are preferable to presses with two uprights of the copying-press type, permitting the mounting of large prints being done in several stages.[2]

[1] To ensure correct placing of the print on the mount, the latter may be covered by a mask which is slightly larger than the print, and is held in position by weights; or the print may be laid face down on a card the same size as the mount, and centred correctly on it. The mount is then pressed down on the print, its edges coinciding with those of the card.

[2] If the mount is not liable to be injured by moisture, the print may be pressed into place with a damp sponge, at the same time removing any mountant from the edges.

[3] Also, if the cards on which prints are mounted are not stained by water, the place on the card where the print is to be applied may be moistened with a wet sponge, mounting being done when the card is bent.

[1] The thermometers fitted on dry mounting presses should be capable of withstanding a *very much higher* temperature than that normally required, as otherwise they usually burst the first time they are used.

[2] It is convenient to set up the press so that its lower table is prolonged by shelves, fixed or movable, particularly when it is wished to mount prints of large size in several stages. The wheel may be bound with cloth to prevent blisters on the hands.

The vertical slides must be lubricated with a little graphite, greasy substances being avoided on account of the risk of spots. A very little of a grease with a

For occasional work, special irons may be used, similar to laundry irons, heated internally by gas or electricity and fitted with a thermometer; or, again, ordinary flat irons (preferably those termed "glazing irons") may be employed. To avoid overheating of these irons they should be heated by plunging them into a basin of boiling water; otherwise, to make sure that the iron is not so hot as to scorch the prints, a piece of white paper should be pressed against it. These devices, however, are poor apologies for a proper dry-mounting press of solid build.

Mounting comprises several successive operations: (1) fixing of the adhesive tissue to the print to be mounted; (2) trimming of these two together; (3) fixing the adhesive tissue to the mount; and (4) heating the whole under pressure, in order to unite finally the adhesive to the two surfaces between which it is placed.

Prints to be mounted must be perfectly dry, and the adhesive tissues should be kept from damp.

The attachment of the print to the adhesive tissue is done with an iron resembling a small soldering iron, usually heated in a flame of gas or spirit. This iron should be perfectly clean. It can be cleaned with fine emery cloth. The print is placed face down on clean blotting-paper and an adhesive tissue laid on it. The tissue is then touched at several points, without too much pressure, by the hot iron.

The print and the tissue are usually trimmed at the same time to ensure perfect registration of the corresponding sides, but the cutting tool should, as far as possible, be held a little obliquely, so that the tissue is slightly smaller than the print.[1]

The print and the attached adhesive tissue are placed on the mount, and, slightly raising first one edge of the print and then another, the tissue is fixed firmly to the mount by some touches with the fixing iron.

For the final fixing, the print is placed face up on a wooden slab, or on a zinc sheet, and covered with a thin zinc sheet, polished for glossy prints, and grained for matt prints (when mounting with the flat irons these zinc sheets are sometimes replaced by white paper).[1] Before placing the print between the zinc sheets proof of the absolute cleanliness of the whole should be made by trial on a piece of clean blotting-paper.

The whole is slipped under the hot press at the desired temperature (usually 155° F. for P.O.P. prints and all prints on thin paper, 175° F. for thick papers), and pressure is maintained for 4–10 seconds according to the thickness of the paper, when the zinc sheets are taken from the press and the print removed.

As soon as a print taken from the press begins to curl it should be bent in the opposite way while cooling.

712. Failures in Dry-mounting. The chief failures which occur in dry-mounting with adhesive tissue are as follows—

The Print Comes Away, Leaving the Tissue on the Mount. The press was too hot. (This heat of the press is suitable for removing a print previously mounted in this way.)

Print and Adhesive Come Away from the Mount. The press was not hot enough.

Unequal Adherence, in Various Places, of the Print. Unequal pressure or heating.

The Print Sticks to the Zinc in Contact with it. Either the gelatine of the print or the zinc was damp.

A Matt Print Becomes Glossy. The press was too hot, or the print slightly damp; the remedy is to matt the print by friction with a pad of cotton charged with powdered pumice. A print on glossy paper which becomes more glossy in patches (because of unequally distributed moisture) should be waxed.

Patches of Different Colour on Print-out Papers. Use of too hot a fixing iron for attaching the adhesive tissue to the print.

Shiny Edging of Tissue Round the Print. The print was not quite dry before mounting, and has shrunk on drying in the press; or the tissue has been cut too large; or the print has been kept too long in a press which was too hot, thus causing the resin to flow.

[1] With some obliquely cutting trimmers the tissue tends to be a little larger than the print, and there then appears a shining edge of shellac around the mounted print. Some workers prefer to cut print and adhesive separately, making the latter about $\frac{1}{16}$th of an inch smaller than the print; the provisional fixation of the tissue is then done after trimming.

[1] The order should be reversed when using a press in which the heated plate is the lower bed.

Dry-mounting may be done on embossed mounts by the insertion of some packing so as to limit the pressure to a point between the surface of the print and that of the mount.

The zinc sheet must be cleaned with methylated spirit to remove traces of the adhesive; it must never be scraped.

713. Preparation of Tissues. Adhesive tissue may be prepared by impregnating very thin, *unsized paper* (letter-copying paper) with a mixture of the two solutions (A) and (B) given below, prepared on a water bath—

A	Methylated spirits .	6 oz. (300 c.c.)
	Pale shellac . .	4 oz. (200 grm.)
B	Methylated spirits .	8 oz. (400 c.c.)
	Gum elemi . . .	1 oz. (50 grm.)
	Syrupy Canada balsam	1 oz. (50 grm.)

This mixture may also be used as a coating on the backs of prints (or papers used for multiple mounting), but, in order to prevent the alcoholic solution from going through the paper and causing patches on the face, it is necessary to size the prints fairly strongly with two coatings of starch paste (the second coating not being applied until the first has dried), or by a coating of thin gum-arabic (the perfect continuity of which can be seen by its gloss when viewed very obliquely).

In the case of glazed prints, these various coatings are done before the print is removed from the glass or ferrotype sheet.

714. Waxing and Varnishing Prints. Silver prints (i.e. photographs on P.O.P. or development papers) may be very effectively protected against atmospheric action by waxing, the process also enhancing the depth of the blacks on matt paper to an appreciable extent.

The waxing solution may be prepared by melting paraffin-wax on a hot iron, and letting it run into petrol, conducting the operation in a room where there is neither fire nor flame. On cooling, the waxing solution will have the consistency of thick cream. This is spread on the print by circular frictional movements, using a flannel pad.

Another way to give a certain degree of depth to the blacks of matt prints is by treating them (by means of an air-brush or atomizer) with a thin solution of gum arabic, but this gum, unlike the wax, does not afford any protection to the print.[1]

[1] Prints may also be varnished uniformly by using a celluloid varnish, sufficiently diluted by the addition of amyl acetate, or butyl acetate, to avoid a glossy coating, even on matt prints.

The suggestion has been made to varnish bromide prints by means of a fatty varnish (medium lithographic varnish, forming the excipient of fatty inks), restricting the varnish to the blacks of the image. For this the Bromoil method is used, but varnishing with the brush is done on the image which has been re-developed before swelling.

These various operations should be deferred until after spotting (§ 720) and retouching (§ 721), whenever such work is called for.

Imitation enamels, used especially in inferior jewellery, are made from a photographic print (mounted on card) which is covered with successive layers of a transparent varnish. The colourless cellulose varnishes used in various trades (coachbuilding, the leather trade, etc.) can be advantageously employed. These varnishes must be spread by means of sprayers, similar to the air-brushes used for retouching but larger, and constructed for use of air at higher pressure.

715. Embossing Prints. At the time when photographic portraits were almost invariably printed on albumen paper and then enamelled, it was usual to *emboss* them (to convex shape) in a special press before attaching them to the mounts. This practice, fortunately, has been abandoned, but another method, almost as objectionable, has been introduced of late years, viz., plate-marking, as customarily done with copperplate prints made on hand-presses. This practice is, in some measure, justifiable for oil or Bromoil transfer prints, which somewhat resemble etchings (the admission committees of some exhibitions are taken in by them!), but there is very little to be said for it in the case of prints obtained by other methods.

Numerous contrivances have been devised for obtaining this plate-mark, either after mounting or even during dry-mounting, viz., rectangles with sharp or rounded corners, circles, ovals, and their counterparts, in zinc or cardboard.

The same result may be obtained, without any special tools, as follows: On an illuminated table (stout ground glass laid on a box containing several electric lamps) is placed a card or mask of outside dimensions equal to those of the plate-mark desired; the cut-out part corresponds with the dimensions of the picture. Owing to the translucency of the support it is easy to register the print correctly on this card.[1] The plate-mark effect is then given by passing a burnishing tool, e.g. the handle of an old toothbrush, along the card so as to press out the print (or mount) until it touches the supporting surface.

[1] In the case of a photograph on an opaque mount, the registration of the card is done with the print placed face upwards, afterwards turning over the print and the card on to a sheet of glass or zinc, with avoidance of any slipping.

In passing, mention may be made of the various attempts (C. Pietzner, 1898, and others) to introduce photographs embossed by pressure between a relief of the subject and its counterpart. Such embossing is done after the photograph has been attached to stout paper; the hollows are then filled with a plastic material before mounting the so-called "medallion" on card.[1]

716. Outline Photographs on Wood. Full-length photographs, mounted on ply-wood, then cut out and attached to a small wooden base, have met with a certain amount of success of late years under the name of "photographic statuettes."

The prints are secured to the thin ply-wood (about $\frac{1}{8}$ in.) with a strong adhesive, and the cutting-out done with a fret-saw, following the outlines of the figure. The wood is held obliquely to the plane of the saw, so that the cut makes a slightly acute bevel, the under-surface being thus slightly smaller than the upper. The cut is smoothed with a fine file, the bevelled edge and the back surface are blackened with a matt black varnish, and the cut-out is mounted in a groove cut in a small wood base, which is painted to harmonize with the tone of the print.

717. Combination Photographs. Sometimes it may be necessary to combine different prints, or parts taken from several prints, so as to give the effect of a single photograph. Such is particularly the case with combinations of photographs forming a panorama[2] or with vertical aerial photographs,[3] for making a map which is by no means accurate but is full of detail. Such is also the case with trick photographs for illustrated papers (heads of known persons substituted for heads of figures taking part in an event, or a scene created by introducing portraits of persons into the photograph of a landscape or building, the respective reproductions being made on scales in accordance with the perspective). These are completed, after combination, by laborious retouching for the purpose of masking the imperfections of the work.

We shall not consider more than the two first cases cited. At the outset, it is to be noted that photographs for combination should always have the same degree of contrast, the same depth, and the same tone. Moreover, in the case of aerial photographs, it is essential that they shall be brought to the same average scale.

The successive parts of a panorama are generally bounded by vertical lines; the various parts of a map mosaic are sometimes limited by a straight edge, which may be placed in any manner, but more often by an irregular line, or by a natural boundary (e.g. fields, roads, railways, etc.). The best position of a division is found by looking through the two prints to be joined, superposing them on a glass brightly lighted from below, protecting oneself by opaque paper from the surrounding light. The quality of the two prints not being always equal in the region common to both, it is well to use as little as possible of the one which is less satisfactory in this respect.

718. In mounting composite panoramas, the various methods described below may be used.

After the prints have been trimmed along their vertical edges to fit as well as possible, they are placed side by side on an illuminated table or against a window, and register lines drawn from one print on to the other. The prints are then placed in a dish of water, allowed to expand, and then assembled on collodion-coated glass, according to the method used in glazing (§ 614), the register marks being correctly aligned. Any required adjustments can be made through the glass. Before the prints are quite dry they are backed with stout paper, wetted until they have expanded to the full, and then mounted with a stiff paste. The contraction of the backing paper in drying counteracts the tendency of the individual prints to separate. After the whole is completely dry, it is detached from the glass, the edges are trimmed, and it is attached to any suitable mount (J. N. Pearce, 1924).

In the case of dry-mounting, the prints, trimmed as above, must first be dried with heat to shrink them as much as possible. They are then mounted on thin paper, previously expanded by moistening in steam. The paper

[1] Images with the appearance of relief can be obtained by copying by projection a negative and positive of the same subject superposed in imperfect register.

[2] The successive parts of a photographic panorama on flat sensitive plates cannot be exactly joined, since a plane perspective does not correspond with a cylindrical perspective (§ 32). Many makers of panorama photographs, therefore, abandon all attempts at registration, and arrange the successive views (cut to the same dimensions, and made so that two adjoining cuts correspond to the same point on the horizon or on the background) at a fraction of an inch from each other. In this case it is usually preferable that the views appear on a dark ground, which may, in turn, be attached to a lighter mount.

[3] The term *vertical aerial photographs* is used in reference to photographs taken with a camera with vertical axis. Such photographs, if they are taken high enough above level ground, approximate closely to a map.

contracts after mounting, and so ensures perfect joins between the prints.

In either case, if it is preferred to allow the prints to overlap each other, the double thicknesses are rendered less conspicuous by dry-mounting the assembled row of prints on a thick but rather soft card, under heavy pressure; in this way the extra thicknesses are forced into the card, the whole becoming more nearly flat.

719. In assembling aerial photographs, the preliminary trials which have to be made in placing them hardly allow of exact joining of prints previously cut to a common boundary. Hence it is necessary to cover a part of each print by the adjacent prints. To avoid extra thicknesses at the joins, the trimmed prints must be chamfered off so that the thickness at the cut edges of the paper is progressively reduced over a distance of about an eighth of an inch, leaving a layer of emulsion only at the extreme edge. This may be done with glass-paper, after the prints have been trimmed to the required geometrical contours.

Prints are generally mounted on stout drawing paper or linen paper, on which has previously been traced a rough map of the region, drawn to the mean scale of the photographs, this tracing being made by proportional enlargement of the map of the region. Before finally fixing prints in position, trials are made with the prints temporarily placed in position by small lead weights. By raising the edges of those photographs which cover the others, register lines may be traced on the map support, so as to allow of the prints being replaced when they have been coated with mountant.[1]

720. Spotting. No matter how carefully printing is carried out, it is rarely that a few prints do not show minute white spots (shadows of dust on the negative or in the printer) and require spotting. All apparent defects in the negative should, of course, have been corrected, the spotting of one negative being obviously quicker than that of a number of prints. When a print is to be mounted, mounting should always be done before spotting and retouching.

Spotting is best done on an inclined easel, fitted with brackets, on which large prints may be rested. Small prints may be held at a convenient height by flat springs fixed to the easel.

Transparent colours should be used for spotting,[1] such as Chinese ink, sepia, Indian red, and indigo; the light tints are obtained by dilution, not by addition of opaque white. It is necessary not only to match the tint and the depth of the adjoining parts of the image, but also to obtain approximately the same degree of gloss. This is done by diluting the colours with water containing a variable proportion of gum arabic solution. The mixture is made on a white porcelain palette, in quantities the size of the head of a pin, a small spot being allowed to dry on a piece of paper the same colour as that of the print, in order to judge of its appearance before commencing work. Greatly-diluted colours take badly on gelatine, or are difficult to apply, so that it is best to use the colour almost dry, with a sable hair-brush No. 0 or No. 1, with the point tapered[2] by dragging it along the palette and turning it between the fingers. The spots in the shadows are touched out first, and then, as the brush empties, the lighter parts are treated.

The larger white spots should be touched out, as required, by hatching or stippling with a brush or pencil, endeavouring to produce a texture similar to that of the surrounding image.

Minute black spots are removed with a fine scraper, but not one of those used for negative retouching, as the latter needs much more careful sharpening, and this would have to be repeated after working on paper.

721. Retouching of Prints. Retouching (or working-up), though exceptional on positive prints printed by contact, is often necessary on prints obtained by enlargement, on account of the magnification of small defects, which are negligible in a direct print, and also for the reason that retouching on the negative then becomes too apparent. Moreover, when there are serious defects in a negative which are difficult to retouch, it is often quicker to do the necessary retouching on an enlargement, from which a copy negative of the same size as the original is then made.

Whilst retouching as practised commercially

[1] These trials can be shortened, when the photographs have been obtained on successive rectilinear flights, by fixing the prints of each row, by means of a few spots of strong liquid glue (e.g. seccotine), to two partially stretched elastic bands. It is then easy to adjust the successive rows relatively to each other so that the errors are equally distributed between the photographs of each row (B. Melvill Jones, 1925).

[1] Sometimes a little of the material of the image itself is used, being removed with a little warm water from the trimmed-off edges.

[2] After use, wash the brush carefully, dip it in weak gum arabic, shape the point between the fingers and, keep it so that the point retains its shape. The point should not be shaped between the lips; this is a dangerous practice as many colours are poisonous.

is carried out chiefly with the air-brush, at least for broad effects, the best retouching is almost always done with the brush and the pencil in dealing with small details, using soft crayon for clouded grounds and areas of any size.

Retouching is best done on an easel, and with a first-rate contact print in view for comparison.

Graphite pencils leave a shiny mark, and are hardly ever suitable except for semi-glossy prints, so that drawing pencils (of artificial lead) are usually used; these work softly and leave a deep matt black mark. Coloured crayons (sepia, red chalk) are also used, in addition to white crayons for putting in light accents.

Powder colours, so-called "sauces," are sold in a great variety of hues, especially in tints of black, sepia, red chalk, and all the usual photographic tones. They may be mixed for production of intermediate colours.

Retouching is generally preceded by treating the print with powdered pumice. The perfectly dry print is placed flat on a table covered with white paper; a little finely-powdered pumice, also absolutely dry, is dusted on the print, and rubbed all over it with a pad of absorbent cotton, using intersecting circular movements, so as to impart a slight bite to the whole surface of the print; the excess of pumice is removed with a soft brush.

Considering portraits in particular, work is usually begun on the ground, with the soft chalk (sauce). For this, there is required a palette or saucer, viz., a chamois leather stretched on a light piece of wood (the edges being stuck down on the underside), or simply a piece of rather rough cardboard. On it is mixed small pinches

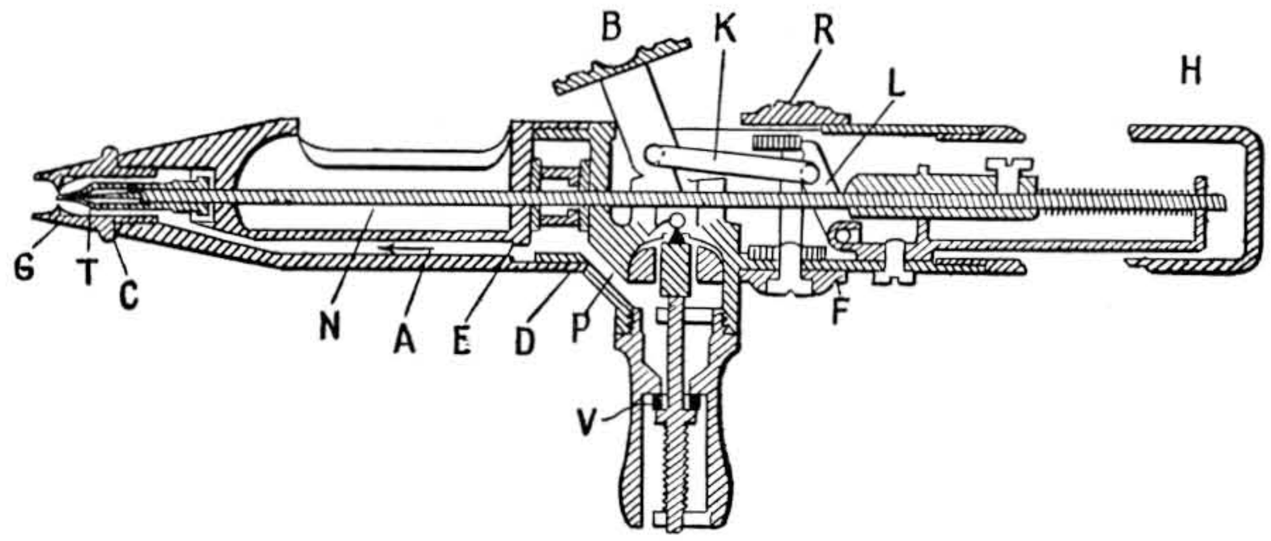

FIG. 187. MECHANISM OF AN AIR-BRUSH

of the chalk and pumice powder, the pumice being added in proportion to the lightness of tint required. A little of this mixture is placed on a cotton pad; this is levelled down on a clean place on the palette. The enlargement is placed flat, as for the preliminary friction with the pumice, and the colour spread with overlapping circular movements, beginning in the places which should have the deepest tone, and passing to lighter and still lighter parts, as the pad becomes less charged with colour. The various tones of the background should always be intermediate between the lightest and the deepest tones of the subject proper. Parts on which too much work has been done may be cleared with pure pumice. White accents may be put in with eraser of the kind known as "plastic rubber" (rubber which can be kneaded in the fingers), but the effect is often too rough.

After finishing the ground, the work is continued by first softening crude high-lights, due to reflections and the glaring whites of starched linen, using a leather stump and paper stumps (small stumps of coiled paper), charged with "sauce," but without pumice. The stump is prepared for use by passing it over the palette from side to side so as to charge it uniformly with colour of the desired depth. Pure whites should be very few in number and small in size. It should be borne in mind that the deepening of a grey causes the adjoining half-tones to appear lighter.

The blacks of the picture may be lightened with a hard eraser (ink eraser incorporated with pumice), cut to a point.

Before any work with a brush is done, any chalk and pencil work must be "fixed" by steaming, that is, passing the print over a jet of steam from a kettle, so as to soften the gelatine slightly and cause the colour to adhere firmly to it.

It is obvious that the retouching of portrait prints calls for a good knowledge of drawing and the anatomy of the face, subjects that cannot be discussed here.

722. Use of the Air-brush. The air-brush, one of the best models of which is shown in the accompanying illustration (Fig. 187), is connected by the lower union (closed, when not in use, by the valve *V*) with a reservoir of compressed air, or with an air compressor. The colour is poured in the cup, through which passes the German silver needle *N*. When the valve *V* is opened by pressure on the button *B*, the compressed air escapes through the passage *A* and the strangler *G*, surrounding the needle with a fine mist through the hollow stem *T*.

The milled ring *R* acts through a slot, limiting the movement of the lever *L*, and, consequently, of the needle *N*, in the direction of its point, so as to obtain a continuous even jet for producing light uniform tints or for drawing lines.

The mechanism of these instruments is very delicate, and one should specially avoid bending the needle. If the latter fails to close the hollow stem by coming to rest on its conical seat, the jet is caused to splutter. The only dismantling which should be done by the operator is that of the front piece *C*, which should be frequently cleaned.

The colours to be used must be very finely ground and quite free from dust, any particle of grit being liable to be caught in the passages.

To clean the air-brush thoroughly it is only necessary to blow in air under relatively high pressure, after having immersed the whole front half in clean and, preferably, warm water. Then, with one finger, the orifice *G* is alternately closed and opened, expelling the air, by the colour cup and then by the normal orifice.

Pressure for the air-brush is supplied by compressed air, e.g. from a reservoir connected to a compressor which is driven by an electric motor provided with a manometric relay, by which the current is automatically switched on when the pressure falls below a certain value, or switched off when the pressure exceeds a given maximum. Other means are an automatic water-pump, or a reservoir in which pressure is maintained by a pump worked by the foot of the operator.

Use is also occasionally made of cylinders of compressed air, or liquefied carbon dioxide.

The best pressure for the work of retouching ranges, according to the effect desired, from 17 to 27 lb. per sq. in. (i.e. 4 to 14 lb. per sq. in. above the atmospheric pressure). Reservoirs connected with the various compressors generally discharge compressed air under constant pressure, controlled as desired by a regulator. We will mention only, by way of example, the method of operation of regulators used on cylinders of carbon dioxide.[1]

Having made certain that the needle valve of the cylinder of carbon dioxide is screwed down, unscrew the hexagonal-headed cap, and adjust the union of the regulator in the thread thus uncovered, interposing a rubber or fibre washer. Close the exit valve (or valves) of the regulator and gently open the needle valve of the cylinder. If the pressure indicated by the gauge is too low, turn the nut (or the key) of the regulator in the direction of the hands of a watch; if the pressure is too great, open the exit valve of the regulator, and turn the regulating button the opposite way until the required pressure is obtained. At once shut again the exit valve of the regulator and, after each time of using, close the needle valve of the cylinder.

723. The colour driven from the point of the air-brush by the jet of gas under pressure forms a conical jet. The farther the instrument is from the paper, the greater is the surface covered by the jet, and the less the intensity of the colour for the same adjustment of the flow. The air-brush can give a flat tint only by overlapping the trails of colour successively deposited on the paper, evenness being the more certainly obtained according as there are a larger number of overlapping bands, but each, singly, of less depth.

Just as in water-colour drawing, irregularities are most to be feared at the moment of bringing the brush in contact with the paper and of withdrawing it, so the first and last strokes with the air-brush are the critical moments for the beginner. The hand holding the instrument must already be moving when the finger rests on the button which releases the flow of colour, and its movement should be continued after the spray has been stopped. To obtain a flat tint, it will never do to pass from one band to another without interrupting the flow.

When it is required to obtain a comparatively clean edge, this edge is, in the first place, put on while holding the instrument very close to the paper, so as to trace almost only a line; the air-brush is then drawn farther and farther back according as bands more and more distant from the edge in question are covered.

It is important that the effect of the air pressure be carefully studied, as well as the consistency of the colour and the two movements of the regulating button.

As soon as practice has been obtained in making uniform tints, the next step is the application of overlapping bands parallel to the outline of the drawing.

724. The colours[1] for air-brush work

[1] See § 791 for the description of the hand regulators for compressed oxygen, very similar in construction, and for the regulations concerning cylinders of compressed gas.

[1] When poisonous colours are used, and especially those containing white lead, an efficient system of ventilation must be provided around each work place to prevent the particles being absorbed by the workers.

should be kept in closed boxes or in well-corked bottles. It is not necessary to mix the colours beforehand on a palette, the mixture being made and diluted in the cup of the instrument. Whilst in brush-work the depth of the colour should be carefully adjusted beforehand, there is no need at all for such exact regulation in using an air-brush. A colour of full strength permits, if need be, of obtaining of half-tints, but one should avoid resorting to this extreme measure, a continuous modelling not being obtainable in a light tone by spraying an intense black on a white ground, nor in a half-tone by spraying of white on a black ground.

Moist colours in tubes, and even liquid colours, are to be preferred to colours in cakes, the use of which may cause trouble if there are any badly-ground particles. The homogeneity of the mixture may be secured in the cup by means of a medium-sized hog-hair brush, which serves also to clean the cup.

As work done with water-colour does not penetrate the gelatine of the image after the manner of inks or of liquid colours, corrections may be made with an indiarubber of medium hardness.

It is always possible to go over a part of the work already done by spraying upon it another colour, either lighter or darker. In fact the capacity of the air-brush in the hands of a skilled worker is exceedingly great.

725. Retouching of Commercial Photographs for Photo-mechanical Reproduction. Photographs of commercial articles to be used as originals in the preparation of printing blocks for catalogues are generally worked-up with the air-brush. The retouching is sometimes carried out over the whole image; in fact, partial retouching involves the risk of making the image patchy.

Such retouching is particularly necessary for photographs of machines, on account of the exaggeration in the photograph of the smallest surface defects, stains on the paint, oil marks, etc. Moreover, important details are liable to be lost in shadow; and machines are very frequently situated on a base and against a background not calculated to show them at their best.

The photographic print, about half as large again as the required reproduction, should be printed on glossy or semi-glossy paper, with somewhat exaggerated contrast.

The air-brush alone not being capable of giving perfectly sharp outlines, these latter are obtained by shields or masks, cut from an identical print or from tracing paper, or chosen from an assortment of stencils cut in thin card or celluloid (straight lines, angles of different sizes, ordinary curves, etc.).

For protecting very small areas, use is made of thin varnish (e.g. a solution of colophany in benzene, holding in suspension a coloured powder), which is afterwards removed with a wad of cotton-wool impregnated with benzene, the colour contained in the varnish being removed at the same time.

For prints of black tone it is usual to employ a mixture of ivory black and permanent white; avoid the use of body colour with a white-lead base, which very quickly turns yellow.[1]

The colours having been applied, joins require to be made with a brush to remedy the irregularities of outline, or to put in any black or white lines, or high-light accents; further corrections may need to be made with a rubber eraser.

726. Sketch Photographs and Photo-etchings. Under the name of sketch photographs are included portraits on a white background, generally obtained by enlargement on paper with wide margins, in which the photographic image is printed very light and is worked-up by hatching with a pencil (or pen), which tends to give it the appearance of an engraving. This work is usually confined to the shadows on the face, to the clothing, and to the drawing of a background, lightly sketched in afterwards.

So-called "photo-etchings" differ from sketch portraits chiefly in the much greater subjugation of the photographic image, the face itself being completely re-drawn in pencil.

While expert artists may thus produce pleasing results, it is easy, when such work is done without sufficient knowledge of drawing, to get effects greatly inferior to a good direct print worked-up in a straightforward manner.

From a technical point of view, the only item of importance is that of obtaining a pure white ground in the print. This is done at the sitting by specially strong lighting of a uniform white background, slightly inclined towards the light, or afterwards by working-up the negative or by local reduction of the prints.

727. Coloured Photographs. Costume photographs, decorative effects, used for advertisement purposes, as well as certain record

[1] Certain body whites reproduce as more or less deep greys when photographed on wet collodion with a source of light rich in ultra-violet; some preliminary trials should be made with various brands before finally adopting one (W. J. Smith, 1905).

photographs (flowers, etc.), are often much more convincing if coloured, even though very slightly. Colouring is generally done with water-colours, using transparent colours, or with dyes. Such colouring requires a light print from a panchromatic negative; a transparent colour obviously cannot show orange or red if applied to black silver deposit in the print.

Apart from this special application, public taste for colour, even in its crudest form, has induced portrait photographers to offer to their customers coloured photographs which, sometimes, are very far removed from works of art. However, specialists in such work may plead extenuating circumstances, e.g. severe competition in prices, or the absence of any data relating to the sitter beyond a mere sketch indicating more or less the colour of hair, eyes, etc. For these descriptions of colouring use is made of pastel and its variants, water-colour (in wash or with an air-brush) and oil-colours.[1]

Finally, in France, there are "travel souvenirs," made by colouring the back of a photographic print, the face of which is laid down on a flat or convex glass, and the print then rendered translucent with oil varnish.[2] These *crystoleums* were at one time quite a vogue in England.

As a general rule, colouring must be done in daylight; when work of this kind is done in artificial light it is necessary to use exclusively incandescent lamps in bluish bulbs, or a bluish filter, affording a light corresponding closely with daylight.

728. Colouring with Dyes. Prints of a purely record character are best printed on glossy paper. Fixing should be done in an acid bath with no alum in it, otherwise the gelatine will refuse to take the colour in places. To facilitate the penetration of the colours, the print, before colouring, may advantageously be immersed for a few minutes in a 1 per cent solution of ammonia, being afterwards rinsed and dried.

For the tinting, aqueous solutions of acid dyes are used (§§ 602 and 606), a suitable strength being found by trials on waste prints. The colours are applied with a brush, preferably on the dry print, except for flat tints, which may be done after damping the gelatine slightly, but it is then necessary to work very quickly, with the brush lightly charged, in order to avoid spreading the colour where it is not wanted.[1]

If it is desired to glaze the photographs thus coloured, the colours must be fixed in the gelatine, by suitable mordant, to prevent them from spreading in the picture when wetted. This mordanting may be done, after complete drying of the tints, by five minutes' immersion in the following bath—

Sodium tungstate . . .	90 gr. (10 grm.)
Syrupy phosphoric acid . .	10 min. (1 c.c.)
Hydrochloric acid, pure, concentrated . . .	40 min. (4 c.c.)
Water, to make . . .	20 oz. (1,000 c.c.)

On removal from this solution prints are glazed without intermediate rinsing.

729. Water-colouring. Water-colours are usually employed on matt prints with a white base, lightly printed, and—at least, in the case of portraits—sepia-toned. After drying, the surface of the paper may with advantage be treated with pumice (§ 721). Otherwise, it is often necessary, in order to facilitate the adherence and uniform application of the colours, to treat with artists' ox-gall.

Transparent colours are the best. Work is carried out on a very slightly moistened print, with a relatively large brush, well-charged with colour, or on a dry print by spraying with an air-brush.

Colours which are unduly bright should be avoided, and the whole process should be done straight off, so that the contrasting effects of neighbouring colours may be correctly judged.

730. Pastel Colours. Treatment of the print with pumice does not always ensure perfect

[1] We shall not here consider oil paintings on a photographic base of sensitized painters' canvas, nor miniatures on photographic base, obtained by printing on ivory by the bitumen process of photo-engravers.

[2] Striking effects are also obtained by backing a positive transparency, of very thin depth, or a print on translucent paper, with paper on which has been made a rough outline of the subject, and which is afterwards coloured in light tints. Finally, by use of the facility with which alcohol penetrates paper, it is possible, without further preparations, to colour the prints on the back by means of basic dyes (§§ 602 and 604) used in concentrated solutions to which is added a sufficiently large proportion of alcohol.

[1] From dealers supplying amateur photographers' materials one can get colouring outfits, which usually include four bottles. One of these contains a 2 per cent solution of albumen, with the addition of a small quantity of ammonia and an antiseptic. This liquid is first of all applied "neat" all over the print. It is also used for diluting the coloured liquids before they are spread over the paper. The colouring liquids are aqueous solutions of acid dyes, e.g. naphthol yellow, rhodamine S. or erythrosine, and carmine blue, mixtures of which in various proportions give intermediate tints.

adherence of the pastel properly so-called, and expert workers in these colours sometimes adopt the method of coating the print with a thin and warm solution of fish glue. Then, before this coating has dried, powdered pumice is dusted on with a square-mesh sieve (sieve No. 120 or 150). This coating must be perfectly even, but not so thick as to mask details of the image. The print having been dried, any non-adherent pumice is carefully brushed off. The process is unnecessary when colouring is done with soft chalks mixed with powdered pumice (§ 721).

As a rule, soft pastels are used for the background, and semi-hard pastels for the face; the colour, always somewhat opaque, partially covers the image, so that pastel work calls for a more complete knowledge of drawing than water-colouring.

Prints coloured in pastel must be fixed with a fixative varnish applied with an air-brush.

731. Oil-painting and its Variations. The materials used, according to circumstances, are transparent colours through which the photographic image is visible, or opaque colours, the photographic image then serving merely as a guide to the artist.

We will consider here only work with transparent colours.

The starting-point, as far as possible, is a light print on moderately rough paper. Taking of the colour is often facilitated by coating the gelatine, a few days before applying the colours, with a very thin and even layer of boiled linseed oil. Once the work is begun, it should, preferably, be carried on to a finish without interruption. When drying is complete, some retouching may be done with water-colours, so as to avoid delay due to further drying.

Prints finished in wax colouring are preferred to those in oil colouring for some commercial work, as they dry more quickly and with a less glossy surface. These colours are prepared by crushing the dry colours on the palette in a medium of white wax and resin, viz.—

Pure white soap . . .	½ oz. (15 grm.)
Essence of lavender . .	2 oz. (60 c.c.)
Genuine essence of terebenthine	28 oz. (840 c.c.)
Gum elemi	1 oz. (30 grm.)
Virgin wax	2 oz. (60 grm.)

The soap is dissolved in the essence of lavender, and the jelly thus obtained is diluted with a little of the essence of terebenthine. The remainder of the essence of terebenthine is used to dissolve the gum elemi, this solution being filtered. The wax is melted at as low a temperature as possible, and, after turning out the gas, the melted wax is poured into the gum solution, to which is finally added the soap jelly.

If the surface to be treated is of large size, the colour is applied with a soft linen pad, any over-running of colour being removed with a rag soaked in terebenthine; in the case of fine detail the colouring is done with a brush.

The colouring may also be done with dry colours ground in a resinous medium obtained by dissolving, on a water bath, 5 per cent of boiled linseed oil and 5 per cent of gum dammar in essence of terebenthine (R. Namias, 1922). After drying, the colours thus applied may be removed locally with an indiarubber; the adherence of the colours being very weak, they must be fixed with a fixative varnish applied with an air-brush.

732. Framing Photographs. According to circumstances, photographs may be framed close up to the moulding (§ 705), or with a visible mount between the print and the frame. Much use is also made of mounting simply under glass, the print being made with extra wide margins, or mounted on a board much larger than itself. It is then simply secured to glass by means of a backing card and a strip of gummed paper.

Close-up framing simply in wood is specially suitable for silver and carbon prints. Prints of black or red chalk tone go well in a frame of dull gold or one of pure empire green enriched with a little gold. Prints of less defined colour are more suitably framed in natural or stained wood; only prints in red chalk are really suited to a white frame.

There is more latitude in the choice of a frame for prints with wide margins or with a large area of mount round them, but the fact should not be lost sight of that the essential quality of a frame is its unobtrusiveness. A very wide margin usually needs a very narrow frame, whilst a narrow margin often looks better in a relatively wide frame.

It is a good plan to bind up the glass and the print, and also any backing card, with strips of gummed paper, so as to keep out dust and atmospheric agencies liable to affect the print in time or to cause fading of non-permanent photographs. The gummed binding will be hidden by the frame, and need not therefore be perfectly regular.

In *passe-partout* framing, where the moulding

is replaced by a paper binding, this paper should be of a tint and texture appropriate to the print and mount, avoiding imitations of costly materials, which are only too often mere parodies of the real thing.

Before finally fixing the whole, the backing card is fitted with rings for hanging, generally by means of lengths of tape passed through a slit in the cardboard, turned down on the inside, and then stuck in place with a piece of stout paper and a touch of adhesive.[1]

An even width of paper binding on all four sides of the glass front is essential to a good appearance. Use may be made of the gummed papers specially prepared for this purpose with a crease, made by folding at a suitable distance from one of the edges. Without the help of this special binder, an even width may be attained by means of strips of wood, having two parallel stops at adjustable distances, one for the paper, the other for the glass. It is sometimes preferred to bind with strips much wider than required, the excess being cut and removed after wetting. In any case care must be taken to ensure correct joints at the corners, the binding overlapping slightly, the end of the upper strip being cut at an angle of 45°.

[1] The rings supplied on a gummed base do not always give sufficient security, especially for prints of large size.

PART 5
SPECIAL TECHNIQUES

CHAPTER XLV

COPYING; RESTORATIONS TO THE VERTICAL; DEFORMATIONS

733. Copying by Contact Printing. An original on paper of homogeneous structure, even though rather thick,[1] may be copied by transmitted light, provided the back of the paper bears no imprint or note. This is often the quickest way of reproducing originals. It is useless, and often dangerous, to oil the paper (§ 481) in order to increase its translucency, for the only advantage is a slight reduction of the time of exposure, and this is more than balanced by the time taken to oil the paper and then free it from the grease.

It must be borne in mind that the contrasts of an image are always considerably less when it is examined by transmitted instead of reflected light. This loss of contrast must be compensated for by choosing a slow emulsion capable of yielding a contrasty image by suitably prolonged development.

These same working methods are applicable to the copying of the structure of leaves or of anatomical sections.[2]

734. Copying by Contact in Reflected Light. The possibility of copying by contact a black and white original (not in tones), either opaque or with an imprint on the back, was pointed out as long ago as 1839 by A. Breyer, and the method to be used was described by P. Yvon (1891).[3] A yellow or red filter is placed in a printing frame, and on it is laid the sensitive surface (plate, film, or paper), with the emulsion side towards the inside of the frame. The face of the original to be copied is laid on the emulsion. A sheet of black paper is placed over the original, and the printing frame is closed and exposed to light for a time which has been ascertained.[1] Under these conditions, the light coming to the emulsion before reaching the original tends to fog it uniformly, but a portion of the incident light (the greater as the light used is less active) passes through the sensitive coating and reaches the image to be copied. This light is absorbed by the black portions and diffused by the white ones, which latter return it to the sensitive emulsion. Very approximately it may be said that opposite the white areas the emulsion receives twice as much light as opposite the black ones. By using a very contrasty, non-orthochromatic emulsion[2] and an energetic developer heavily dosed with bromide (§ 386), a negative is thus obtained which may not be perfect, but is quite usable, especially after superficial reduction and vigorous intensification.

This method was for a long time used only exceptionally for preparing lantern slides from illustrations in scientific or technical works. It has acquired a certain industrial importance, particularly for reprints of books, since M. Ullmann (1913) suggested the substitution of a thin layer of bichromated gelatine for the sensitive emulsion. By suitably regulating the exposure, the gelatine is rendered insoluble opposite the whites and remains soluble opposite the blacks. After washing away the soluble portions, the relief of colourless gelatine can be brought to any required density by dyeing or by the formation of opaque precipitates (Manul process).

735. Copying with a Camera. Although, in principle, copying may be undertaken with any camera having a sufficiently long extension, the adjustment of exact parallelism between the

[1] For purely record purposes, satisfactory copies can be obtained in this way from photographs of card substance (post cards); owing to the great diffusion of light by the base, an imprint of grey colour on the other side does not usually appear in the copy.

[2] As these sections are generally mounted between glass cover slips, it is necessary, in order to obtain a sharp image, to place them at a great distance from a source of light which is nearly a point, or to use the beam of light thrown by a condenser (§ 757).

[3] This process is sometimes attributed to J. H. Player (1896) and called *Playertype*, although this author only drew attention to a fact already known.

[1] As a guide, it may be said that excellent results have been obtained by using the red-stained gelatines sold as "non-actinic" screens for dark-room lamps and the special emulsions sold for process work, and giving exposures of 30 minutes at 3 ft. from a 50 candle-power electric lamp (W. H. Heydecker, 1923).

[2] It is clearly not possible to use anti-halation coatings or coatings of several superposed emulsions.

planes of the original and of the sensitive surface is extremely tedious, especially if the copy requires to be made to a given scale, unless specially built apparatus (§§ 150 to 152) is available to facilitate the work.

Some vertical enlargers (§ 762) can occasionally be used as copying cameras. The easel and the dark slide are in an horizontal plane, and the axis of the lens is vertical. The parallelism of the two conjugate planes can then be tested very simply by means of a spirit level.

In the absence of a permanent installation, it is always possible to make such arrangements as obviate the necessity for the repeated adjustments otherwise needed on each occasion. It is, for instance, possible to rig up a simplified copying bench by mounting the camera on a stool which can be slid along grooves or rails placed on a table, marks being drawn that permit of the table being always brought to the same position as regards the easel fixed permanently to a wall, and of the camera being always replaced in the same position on its stool.

If there is insufficient room to use the lens with its axis horizontal, a worker with any manual skill could easily arrange for the camera to move in vertical slides, the original to be copied being placed directly on the floor.

736. The simplest way of ascertaining the parallelism of the planes of the easel and of the focussing screen (assumed to occupy the same position as will be occupied by the sensitive surface) when these planes are not horizontal consists in obtaining a mirror (surface-silvered glass; or one surface of a sheet of glass may be coated with black varnish; or a sheet of tinfoil may be stuck at its centre) of such size that it can be exchanged for the focussing screen.[1] First fix this mirror to the easel facing the camera. Remove the lens board, and, turning back the frame of the focussing screen, go behind the camera and, looking through it, sight the mirror with a rudimentary sighter (a sight can be taken along one edge of a flat ruler) fitted on an easily movable support such as a tripod stand, head-rest, etc., so that the image of the sight-line reflected by the mirror forms an exact prolongation of the sight-line itself. The sighter being then left undisturbed and fixed, the mirror is put in the place of the rear surface of the focussing screen with its reflecting face turned to the back of the camera. If the mirror is in a plane parallel with the easel the coincidence of the line of sight and of its image will still be seen. If this be not the case, the adjustment of the camera or of the easel must be modified until the sight-line coincides with its image in the two positions given to the mirror.[1]

737. Factors Affecting the Sharpness of Copies. A copy is perfect only if absolutely sharp and if the thicknesses of the lines are reproduced on the same scale as for the entire image.[2] In the copy of a pen-and-ink drawing, for instance, if the lines are thickened by a few hundredths of a millimetre only, the effect is considerably heavier; on the other hand, if the lines are finer the drawing loses all strength.

It is necessary to remember that stopping down the lens excessively may impair the sharpness instead of improving it (§ 53). The better the quality of the lens, the larger the aperture which it is best to use. Apertures of diameters smaller than one-fiftieth of the extension should be avoided.

An original that is not perfectly dry when it is placed on the easel may shrink progressively under the effect of the heat of the lamps, and the sharpness may suffer in consequence. On the other hand, the heating of the layer of air between the lens and the original, if the lamps are too near the latter, may cause currents similar to those that are seen when sighting objects behind a flame (F. Dogilbert, 1909).

Vibrations of the floor may render it impossible to obtain a sharp image (§ 152). It is at least advisable to avoid walking around the camera during the exposure, and particular care must be taken not to knock against it, even if it is suspended.

The model must always be placed before a black background covering the whole of the field embraced by the lens, so as to decrease the risk of fog and the weakening of contrasts by successive reflections between the components of the lens (§ 57), and diffusion by the interior surfaces of the camera.

738. Choice of Sensitive Material. An increase

[1] If an assistant is available, the mirror can be much smaller, for the assistant can hold it against the focussing screen when the observation is made.

[1] For the adjustments of the high order of precision required in a camera for copying maps, and of its various accessories (prism, mirror), it is necessary to employ the methods described by E. Deville, Surveyor-General of Canada (B. J. Phot., Vol. 59, Dec. 13, 20, and 27, 1912).

[2] To thicken the lines in a very small scale copy from the negative of a document, it has been suggested that a glass strip with parallel surfaces be turned in front of the lens around the optical axis, the strip being the more inclined on the axis the greater the desired thickening of the lines (Schlotzer, 1933).

of contrast always increases the sharpness of the images by merging in the white of the paper any unsharpness resulting from the various circumstances mentioned above. Originals which include only black and white (printed matter, wood engravings, lithographs, geometrical drawings, pen-and-ink drawings) will therefore be photographed preferably on the special emulsions for process work. Originals in black on a tinted or stained ground, or those in colours (architect's or engineer's blue-prints, etc.) will be reproduced by means of process panchromatic emulsions with the aid of suitable colour filters (§ 222).

In the case of full-tone originals (and among these we must include pencil or charcoal drawings and copperplate engravings, of which the lines are of unequal strength) slow emulsions will be required with a very fine grain, or lantern plates, but not the special emulsions of very great contrast which can reproduce correctly only a very short scale, even if development is not forced.

Warm-tone photographs (P.O.P. prints, red or sepia-toned bromides) are nearly always falsified by copying with non-colour-sensitive emulsions, the darker tones tending to merge into the deepest shadows. All difficulty will be avoided by using an orthochromatic emulsion with a deep yellow filter, or, preferably, a panchromatic emulsion with a medium yellow filter. These same means are suitable for copying black-tone prints on chamois or "antique" tinted paper.

739. Photography of Originals on an Opaque Base. The grain of the paper can generally be subdued by greatly-diffused illumination, slight departure from sharp focus, and somewhat ample exposure.

The texture of the paper is emphasized chiefly by the reflection of light on the convexity of each grain. Thus any means of suppressing these reflections results in the disappearance of nearly all traces of the structure of the paper, at the same time scratches and local abrasions due to rubbing are reduced or suppressed, and the contrast of the image is increased.

The most perfect means of eliminating all reflections consists in lighting the original by polarized light and by suitably orientating a polarizing screen fitted in front of the lens (§ 122a).

If a vertical camera is available, a good method consists in copying the original immersed under a few millimetres of water in an ordinary photographic dish with a flat bottom (A. L. Donnadieu, 1883), care being of course taken to avoid all movements or currents of air liable to ripple the surface of the water.[1]

Immersion also improves the reproduction of all photographs on matt or semi-matt papers; it is indeed well-known that such papers have a more extended scale of tones when wet than when dry. This method is especially necessary when the print is to be made on matt paper, as otherwise there will be a cumulative loss of details and of modelling.

In the absence of a vertical copying camera, it may be possible to immerse the print in a vertical glass tank with plane walls, but it is simpler to soak the print in water containing about 10 per cent of glycerine and to apply it by its face to a sheet of flawless glass, just as is done when enamelling prints, or against the gelatine surface of a plate cleared of silver bromide, the pressure of the squeegee then causing the grain of the paper to penetrate the swollen gelatine.[2] The glycerine prevents drying and the resultant risk of sticking to the glass. After the copy has been made, the print is well washed, dried, and mounted again if necessary.

The use of infra-red, which is reflected in very different proportions by metallic silver and by its amalgam, has permitted very contrasty copies to be made of Daguerreotypes, which gave only very poor results with an ordinary emulsion (B. Svenonius, 1934).

740. Lighting of Originals to be Copied by Transmitted Light. In the copying of transparent originals[3] on an enlarged or reduced scale the requisite uniform illumination is afforded by a diffusing surface such as an uncreased sheet of white paper, the front surface of which is illuminated according to the rules already stated (§ 295), a sheet of thin opal glass, or by a series of sheets of ground glass illuminated from behind (§ 761), by means, for instance, of tubular electric lamps parallel with each other, or, if the surface to be illuminated is not great, by a single mercury tube of M-shape.

[1] Immersion, preferably in a tank with vertical sides like an aquarium, avoids the reflections which are always troublesome in the photography of medals, jewellery, gold and silverware, etc., the photograph being taken vertically or horizontally according to the nature of the articles.

[2] It is often sufficient to grease slightly with paraffin oil the image side of the print, which after copying is wiped and then de-greased with benzine or carbon tetrachloride.

[3] A photographic print with excessive contrasts can sometimes be improved by copying if illuminated partly by reflected and partly by transmitted light, the contrasts being reduced according as the lighting by transmitted light preponderates.

In all cases where the photographer is satisfied with daylight, in spite of its fluctuations, the entire apparatus (camera and easel) is directed towards the sky, or at least towards a window, outside which a mirror or diffusing screen of adequate size supplies the necessary illumination.

Unless a triple-body camera specially adapted for copying is used (§ 153), it is at least necessary to cut out the major part of the light reflected on the front surface of the original illuminated by transmitted light; otherwise the copy will be badly fogged or covered with reflections. It is sufficient to have a tunnel of black fabric enclosing four sliding rods (or four cords) passing from the adapter frame (serving as the object-carrier when copying a transparency) to the front of the camera; complete light-tightness is not necessary.

741. Expert Photographic Examination of Documents. The expert photographic examinations of documents may be classed in two groups—

(*a*) The comparison of handwritings or of type-written matter.

(*b*) Investigation of forgeries, erasures of various kinds, and overwriting.

In work of the first group photography is used only to make a permanent record of the conditions revealed by examination of the documents by means of lenses of high magnifying power, and the photographic work is usually directed by the expert entrusted with the examinations. The originals to be compared must be copied under identical conditions with extreme sharpness, and enlarged to the same scale, so as to show the hesitancies of a forger in imitating a handwriting, or the individual defects of the type-letters which may differtiate typewriters of the same make.[1]

The photographer plays a more active rôle in work of the second class, which often allows of the detection of differences which it is impossible to observe visually. The document is photographed with an enlargement of six to ten times linear, if possible with a lens of short focal length.

Erasures are brought out by using a lighting which just grazes the surface, or by means of transmitted light.[2]

[1] For photographing violet and red typescripts, a green light-filter (such as is used for trichromatic selection) must be used in conjunction with a panchromatic emulsion.

[2] Erased texts can sometimes be photographed by the method used for deciphering palimpsests (old parchments written on again after removal of the original writing by scraping or rubbing with pumice). The original is "lighted" with ultra-violet light (rays from a mercury arc in a quartz bulb) filtered through a black nickel oxide glass (Wood's glass). The paper becomes fluorescent except in the parts still impregnated with the iron salts of the ink, and may then be photographed through a filter absorbing the ultra-violet (R. Koegel, 1914), for instance, a solution of sodium nitrite in a trough with glass sides.

The slight traces of yellow remaining after chemical erasure of writing can be accentuated by photographing with an ordinary (non-colour-sensitive) emulsion, or, better still, by wet-collodion, the document being illuminated by a light rich in violet and ultra-violet rays, such as an ordinary mercury arc.

Differences between two inks of the same appearance can sometimes be rendered visible by placing the document for about 8 days in contact with a print-out paper, which is then exposed uniformly to light, the text (or a mechanically or chemically erased text) appearing lighter or darker than the ground.

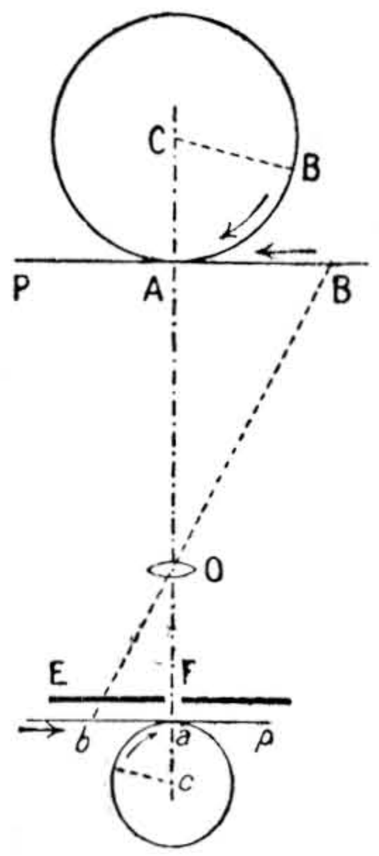

FIG. 188. COPYING ON A ROTATING SENSITIVE SURFACE

Another more general method for differentiating between inks of the same appearance consists in photographing the document several times, each negative being made with a light-filter of different colour; differences of composition are then often revealed by differences in the depth of the lines.

Finally, photo-micrographs of low magnification (× 20 approximately), either single views or stereoscopic views, sometimes permit of ascertaining in which order two lines that cross have been drawn, and thus of detecting additions made after the writing of the main text.

742. Copying a Plane or Cylindrical Surface in Successive Strips. It has been suggested that when copying at one sitting originals of which one dimension exceeds that of the largest useful dimension of the camera, the copy should be made by moving both the original and the sensitive surface at uniform speeds correctly proportioned (C. A. Bruère, 1923).

Let us suppose (Fig. 188) that the lens *O*

projects on to a sensitive surface p the sharp image of the plane P, both perpendicular to the optical axis, and that these two planes move relatively to each other at such speeds that when the point B has reached the point A at present on the optical axis, the point b of the sensitive surface which was receiving its image will itself have replaced, on the optical axis, the point a (image of A). Under these conditions (ratio of speeds equal to the scale of reproduction) each point of the image will remain in invariable position on the sensitive surface during the whole of its displacement in the field of the lens.

The sensitive surface may be wound round a cylinder c turning at the same peripheric speed, on the one condition that an opaque shield E pierced with a slit F parallel to the axis of the cylinder must be used to cover the portions of the cylinder other than those practically merged in the tangential plane p.

Under the same conditions and with the same proviso, the flat original P could be replaced by the cylinder C with a peripheric speed equal to the speed of the plane P. This arrangement has been especially used in photographing metal conduits subjected to erosion tests in various soils (R. Davis, 1925).

The interior walls of a cylinder (rifle barrel) have been photographed by displacing, following the axis of the said cylinder, a periscopic device forming a same-size image of a fraction of the surface on a photographic film moved, in a suitable direction, at a speed equal to that of the periscope. If, for instance, the image includes 1/6th of the circumference, it will suffice to repeat the operation 6 times (each time after rotating the prism of the periscope 1/6th of a complete revolution) in order to obtain the entire image (I. C. Gardner and F. A. Case, 1926).

Finally, a same-size copy of an original of large size may be obtained on a fixed plate by using a lens of very short focal length; the original is recorded by successive parallel displacements, the lens being placed between two Porro prisms of the type used in prismatic binoculars (L. Lumière, 1920). Such an arrangement would involve considerable mechanical complications.

743. Restoration to the Vertical of Photographs Taken on an Inclined Plate. A photograph taken on an oblique (tilted) plate or film may be transformed into an image identical (except for the scale) with the one which would have been obtained on a vertical plate (architectural photographs) or on an horizontal plate (aerial photographs for map making). The problem of this rectification of a distorted image was studied especially by C. Welborne Piper, de Romance, and T. Scheimpflug in 1898, and by L. P. Clerc and by G. Labussiere (1917).

For this rectification, use is made of the formation of a sharp image of a plane placed obliquely on the axis of the copying lens[1] already studied in § 64. Besides the stated conditions for obtaining a sharp image or for throwing back to infinity the vanishing point of the vertical lines (or the vanishing points of the horizontal lines), there is a further condition to be satisfied, in the absence of which the rectified image is not similar to the normal image, but is a "squat" or drawn out transformation[2] of it. (It may be added that care is not always taken to fulfil this condition in rectifying an architectural negative; so that measurements made from the final print would lead to serious errors.) We will only state this condition without giving the proof.[3]

The intersection of the plane of the negative with the vertical plane or with the horizontal plane, hereafter defined, must be at a distance from the entrance node of the rectifying (copying) lens equal to the distance at which it was (at the time the view was taken) from the exit node of the lens taking the view. The vertical plane mentioned is the plane formed (at the time the view was taken) by an horizontal, perpendicular to the optical axis, containing the exit node (in the case of rectification on a vertical plane; this intersection is the horizontal of the negative containing the vanishing point of the vertical lines). The horizontal plane mentioned is the plane led by the said exit node (in the case of rectification on an horizontal plane; this intersection is identical with the horizon line).

[1] If need be, the slightly convergent vertical lines of a photograph taken with a tilted camera can be brought back into parallelism by presenting obliquely to the axis of the copying lens either only the negative to be copied or only the sensitive plate on which the copy is to be made, the lens being stopped down until the requisite depth of field or depth of focus is obtained, but the image thus produced is usually not identical with the one that would have been obtained direct under normal conditions; the vertical lines are either lengthened or shortened relatively to the horizontal ones.

[2] By this is meant a deformation such that the image of a square becomes a rectangle, one of the dimensions being stretched or compressed.

[3] All details will be found in "*Applications de la Photographie aérienne*, by L. P. Clerc (Paris 1920), Chapter XII.

To permit of a negative being properly corrected for distortion it is necessary to have a camera of which the object (transparency) holder and the rear body are both fitted with swing movements, the axes of the swings being parallel to each other and perpendicular to the optical axis. If it is desired to avoid much fumbling in the adjustment of the focus after use of the swings, the axes of the swings must be contained in the respective planes of the image to be rectified and of the sensitive surface on which the rectified image is being made. The negative must be carried on a revolving carrier permitting its principal horizontal line to be placed parallel to the axis of the swing. In order to control the scale of the rectified image it is necessary that the negative holder should slide in its plane, so as to satisfy the condition of non-deformation.[1] Finally, to make the rectification possible, it is necessary to use a lens with a focal length much shorter than that of the lens with which the view was taken.

744. A particularly simple case is that where the planes of the negative and of the sensitive surface cut the optical axis of the lens used for rectification at the symmetrical points (§§ 61 and 62). In this case the angles at which it is necessary to swing the conjugate planes are equal. If, furthermore, the rectification is done with the same lens as used for the view, the angle formed by the two conjugate planes with the normal planes at the optical axis is exactly equal to the angle formed by the lens axis (when the view was taken) with a horizontal plane (rectification on a vertical plane) or with the vertical (rectification on a horizontal plane).[2]

745. Various arrangements have been made or suggested to ensure the automatic linkage of the swing movements of the two conjugate points. We will describe only the rectifying enlarger constructed in 1900 by J. Carpentier for the enlargement of negatives taken with a camera not fitted with rising-front movements and which is therefore often tilted when photographing tall buildings or monuments.

A triple body camera represented in diagrammatic form in Fig. 189 comprises a negative carrier AB and a dark-slide for the sensitive paper $A'B'$, which swing respectively round the axes RR' contained in their planes of support. To ensure the intersection of these two planes in M in the plane perpendicular to the optical axis let fall from the optical centre of the objective O, two levers QR, QR' are fixed to the end bodies of the camera and are pierced with

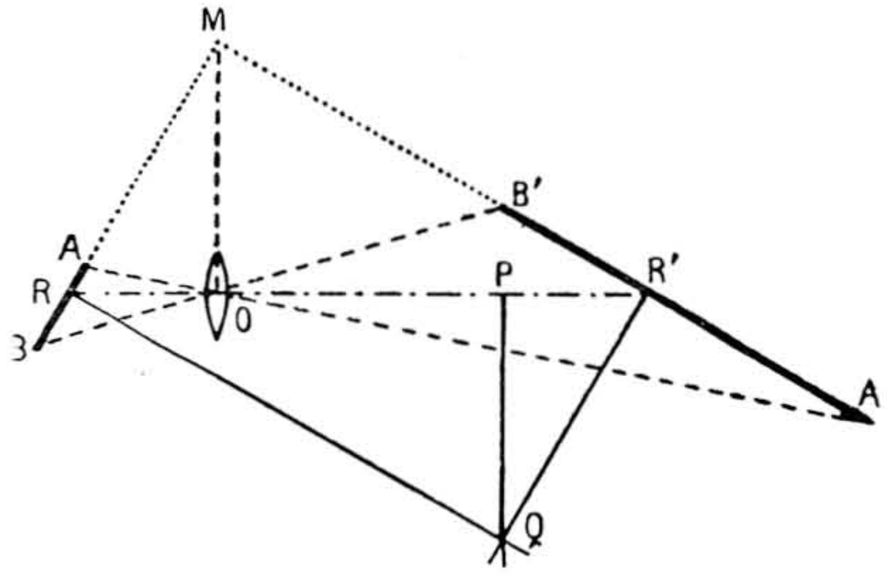

FIG. 189. AUTOMATIC CORRECTION OF CONVERGING LINES IN ENLARGING
(Carpentier)

grooves following the perpendiculars at R and R' to the planes AB and $A'B'$. A gudgeon Q moves without friction in these grooves. This gudgeon is forced to move in a groove PQ of the base, perpendicular to the optical axis, in such a position that the distances OR and PR' are equal.

746. In addition to the already-mentioned applications of the method of rectifying a distorted image, the same methods make it possible to distort systematically any image so as to obtain, for instance, a transparency which, when projected obliquely (projectors for advertising purposes forming on the pavement in front of a shop window an image which is usually very distorted), will be brought back to normal proportions.

In thus distorting an image and then rectifying it without observing the condition of non-deformation, it becomes possible at will to draw out or compress one of the dimensions relatively to the other in any desired proportion.

747. Systematic Deformations. Intentional deformations have been worked out at various times. These are either caricature deformations or one-way deformations (extension or compression of one dimension of the model, a square thus becoming a rectangle) to restore to the same scale drawings made on non-proportional co-ordinates, or to adapt decorative composi-

[1] Instead of this, the decentring of the negative may be replaced by that of the lens, but the adjustment is then more difficult.

[2] All deformation will be avoided by bringing the principal point of the negative to a distance e from the corresponding axis of swing determined by the equation $e = F \tan (\alpha/2)$, F being the focal length of the lens and α the angle in question.

tions to various uses (carpets, hangings, furniture, labels of a given product packed in containers of various shapes, etc.), or to exaggerate scarcely visible variations (flexions or vibrations of rails or mechanical parts).

748. In addition to the method of working described in § 746, "one-way" deformations may be obtained by mechanical or optical means.

For the mechanical deformation of an original there is used a method similar to that described in § 742 for reproduction without distortion. This principle, similar to that of the anorthoscope of Plateau (1829), has been employed by E. Archdeacon (1893), and later by R. Luther

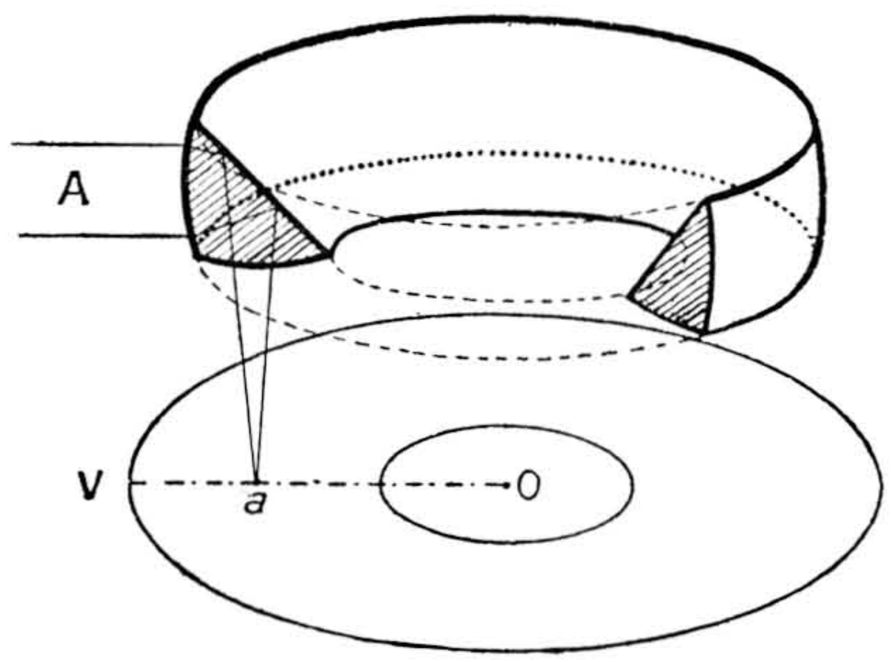

FIG. 190. LENS RECORDING THE COMPLETE HORIZON ON A FLAT SURFACE

(1910), and the latter has also published a complete study of the possibilities afforded by this method.

Let us suppose (Fig. 188) that the original P and the sensitive surface p are moved at uniform speeds non-proportional to the ultra-nodal distances OA and Oa. If the slit F is sufficiently narrow, a sharp image of P will still be obtained on p, but with an extension or contraction, according as the ratio of the speeds is greater or smaller than the ratio of the ultra-nodal distances.

The same result would be obtained if, leaving the original stationary, the focal-plane shutter and the sensitive surface are moved simultaneously. Particular cases are as follow: The sensitive surface is stationary (non-deformed reproduction); the sensitive surface and the shutter have equal speeds in the same direction (total compression); or the sensitive surface moves at a speed twice that of the shutter (inversion as regards right and left without deformation). In the other cases there may be extension or compression in the direction of the movement, with or without inversion of the image as regards right and left.

For the optical deformation of an original, use is made of cylindrical lenses, the employment of which differs according as it is wished to vary at will the ratio of the two scales of image, or as it suffices to have one invariable enlargement of one of the dimensions with regard to the other.

In the first case, there are employed two convergent cylindrical lenses of which the axes of curvature are placed at right angles to one another (Vaslin, 1862; G. J. Burch, 1904), and of which the relative positions are caused to vary.

In the second case a photographic lens is fitted with an afocal system formed of two cylindrical lenses, the front one convergent and the rear one divergent, of which the axes of curvature are parallel and of which the relative positions are those of the lenses of a Galilean telescope focussed on infinity for normal sight. Such an arrangement has been applied to "panoramic" cinematography (H. Chrétien, 1927), the horizontally-compressed image being restored to normal proportions on the projection screen by an identical device fitted on the lens of the projector.

A prism anamorphoser which is adaptable to an ordinary lens to elongate the image in one direction has been produced (R. Petit and A. de Gramont, 1930) on the lines suggested long ago by Brewster, by forming an achromatic prism of which the two elements can be set at an angle such as to vary the degree of anamorphosis.

749. Anamorphoses. Various arrangements have been suggested (C. Chevalier, 1864; Mangin, 1877; L. Ducos du Hauron, 1895) for the recording on a plane a complete circle of the horizon in the form of an "anamorphosis," in which the horizon line is figured by a circle and the vertical lines by the radii of this circle. For this purpose "lenses" have been worked out, formed, as shown diagrammatically in Fig. 190, by a shape obtained by the rotation of a curviline triangle, each of the meridian sections of this "crown" combining the properties of a convergent system and of a total-reflexion prism.

The image of a distant point A is formed in a, the whole of the images being comprised in an annular surface and forming a perspective similar to the distorted annular panorama views provided for tourists in French mountain country and affording a view round the whole horizon, but with vertical lines on the subject

converted into radii. In France a panorama of this kind is known as a "*table d'orientation.*" It is conceivable that a similar arrangement can be used to project the complete panorama on a cylindrical screen concentric with the axis of the system.

750. Caricature Deformations. Caricature anamorphoses can be obtained by photographing a person (or a bust in *alto rilievo*) from a very close viewpoint, using a wide-angle lens of very short focal length or a pinhole. All the projecting parts are thus enlarged on a grossly exaggerated scale.

A very curious process pointed out by L. Ducos du Hauron (*Transformisme photographique*, 1899) consists in using, instead (and in the place) of a pinhole, a system of two fine slits differently arranged in two planes not parallel with each other (Fig. 191).

Of the rays of light issuing from each point of the subject, the first slit admits only those which are quite close to the portion of plane defined by the object point in question and the slit of incidence. This plane cuts the slit of emergence in a point around which there is admitted a very narrow beam of rays forming an image of the object point on the sensitive surface. Thus one, and one only, point of the image corresponds to each point of the subject, but the figure formed by the whole of the image points is not similar to the figure formed by the object points. The deformation varies with the relative position of the planes in which the slits are placed and with the direction of the slits in these planes. It is, for instance, possible to obtain a very great variety of effects if each of the slits is mounted in a tube and one tube can turn inside the other.

It is obvious that this arrangement does not readily lend itself to direct photography on account of the small amount of light transmitted, unless the slits are replaced by cylindrical lenses, but it is easily used for copying an existing portrait. The slits are made in the same manner as described for pinholes (§ 39) and with the same openings.

We must finally mention, as other means for obtaining caricatures, the use of distorting mirrors (such as a sheet of polished flexible metal) or of prisms; the photographing of a

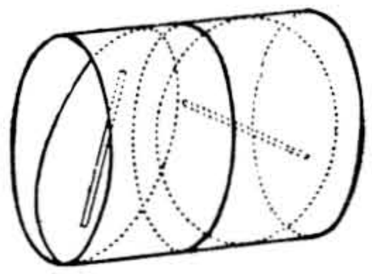

FIG. 191. DISTORTED EFFECTS BY TWO CROSSED SLITS
(Du Hauron)

photographic print bent irregularly, or the projection of an image on a bent sheet of sensitized paper,[1] and finally the bizarre effects which can result from the partial melting of the gelatine of a negative warmed whilst in a wet state.

[1] Under these conditions the backgrounds, or the shadows on the ground usually have impossible shapes, which can be easily remedied by treating the bromide print as for Bromoil and taking transfers (L. Teisseire, 1924).

For quite a different purpose, use has been made of the projection of images on a curved surface, viz. to correct in a measure the image obtained when photographing the decorations of a vase. For this, the sensitive surface is stretched on a framework to which there has been given a shape differing as little as possible from that of the particular part of the object photographed, but with a surface developable on a plane, cylinder, or truncated cone (G. von Lucken, 1920). It is also necessary to mention the projection in suitable conditions, of an aerial photograph on a previously sensitized plan in relief of the corresponding land (Maignan, 1918).

CHAPTER XLVI

ENLARGEMENTS

751. General. A negative is enlarged either directly, by projecting on to a positive sensitive surface an enlarged image of the negative, or indirectly by first making a transparency of the same or slightly larger dimensions as the original negative, and then an enlarged negative from which the final prints are made by contact.[1]

As a rule, the direct method is chosen when only a limited number of enlarged copies of one subject are to be made on bromide paper. The indirect method is preferred for the production of a large number of identical enlargements, and it is the only practical one if the enlarged prints are required on papers of low sensitivity, such as carbon and platinum papers.

An improper application of the *principle of the inverse return of luminous rays* (§ 60) has often led to the recommendation to employ, when making an enlargement, the same lens with which the negative was taken. It is not possible to expect even the correction of distortion by this means, because the negative does not occupy the same position in relation to the lens that it had in the camera except when the enlarged image is of the same dimensions as the subject photographed.

While a cinematograph picture appears sufficiently sharp in spite of its considerable magnification, it must be remembered that what is seen is not one image but a result of several images projected in succession, in which the clumps of silver grains do not occupy the same positions; also more attention is paid to the scene depicted than to the quality of the picture.[2] A photographic enlargement of about 10 × 8 in. size from the standard cinema image of about $\frac{3}{4} \times 1$ in., i.e. an enlargement of 10 times[1] frequently gives altogether unsatisfactory results owing to the granularity of the images.

A well-corrected lens with which focussing has been done so as to obtain perfect sharpness such as is required in the enlarging of scientific photographs does not usually allow a degree of enlargement of more than 4 times without the graininess of the negative appearing to a disturbing extent (§ 196), particularly when a condenser is used (§ 752).

With a lens giving a slight diffusion (through incompletely correcting), or with a perfect lens to which a suitable diffusing device (§ 769) has been fitted, it is possible to obtain, especially when the negative is illuminated by diffused light, images free from granulation and quite sufficiently sharp when viewed from a normal distance, with degrees of enlargement exceeding 15 times and even as high as 40 times. The diffusion of the image then merges into a homogeneous medium tone the irregular tone which would have been obtained if the lens had been able to resolve the graininess of the negative. The best results are obtained, without loss of sharpness, by the use of a lens of very large relative aperture, the depth of focus of which is less than the thickness of the image layer of the negative, so that the graininess of the latter is no longer resolved. This method, which is much used for the enlargement on a very large scale of miniature negatives, is only applicable when the negative is illuminated by diffused light, for the use of a condenser would not permit of the full aperture of the lens being utilized (E. Goldberg, 1935).

752. Enlarging with Condensed and Diffused Light. Very different results, particularly as regards the contrast of the image and the prominence of minute defects in the negative, are obtained according as the negative to be enlarged is illuminated by a beam of light coming

[1] As a curiosity, mention may be made of a method suggested on several occasions (C. Scolik, 1895), and consisting in enlarging the original negative by expansion of the gelatine film (§ 482) without previous tanning. Such a method is necessarily very uncertain, and it should be noted that if the negative is enlarged n times the densities (and in consequence the contrast also) are reduced in the proportion n^2 to 1.

[2] To reduce the granulation in enlargements from cinema film it has been suggested (K. C. D. Hickman, 1926) that several identical negatives of the same subject be projected successively in register on the sensitive paper. A camera has been produced (R. Dauge, 1927) for recording successively on the same plate several negatives of the same subject, these negatives being automatically substituted for each other in the enlarger.

[1] The degree of enlargement is always designated by the ratio between the linear dimensions of a given object on the enlarged print and on the negative. It is sometimes said that an image enlarged, for instance, 5 times is enlarged 5 diameters, or that its degree of enlargement is 5. It will be noticed that the relation of the corresponding areas is then $5 \times 5 = 25$.

from an artificial light-source and caused to converge into the lens by an appropriate optical system (the condenser), or according as the negative is illuminated by a uniformly diffused light, coming, for instance, from a sheet of opal glass placed at some distance and illuminated by suitably distributed lamps.

Other working conditions being the same, the contrast of the image is always greater in the print enlarged with a condenser than in a print enlarged by diffused light,[1] and at the same time retouching and the minute defects on the negative are emphasized, owing to the increase in their contrast with the parts of the image where they appear. In an enlargement made by diffused light the contrast of the image is the same as in a contact print from the same negative on the same sensitive material. The small surface defects are not more pronounced, except as regards their size, than in the contact print.

In a beam of directed light, the most transparent parts of the negative are non-scattering, or scatter only slightly, and thus deviate from its normal path only a negligible fraction of the light transmitted. On the other hand, the densest parts are highly diffusing, and scatter in all directions an appreciable part of the light which has penetrated them. Nearly all this scattered light fails to reach the lens, and consequently the dense parts have an apparent opacity greater than their actual opacity, with a resultant increase of contrasts.

In a negative illuminated by completely diffused light, that is a negative of which each point receives light at all possible angles of incidence, there is a balance between the light which is travelling towards the lens before reaching the negative and is scattered by the latter, and the light which has reached the negative at other angles and is likewise scattered in the direction of the lens.

The first study of this phenomenon was made by A. Callier in 1909, hence the name of *Callier effect* sometimes given to it. This investigator had admitted that the densities in condensed light for a given negative are equal to those in diffused light multiplied by a constant factor. Since then it has been recognized that the relation between these two values of density is considerably more complicated.[1]

The various factors that reduce the scatter of light by the surface of the negative to be enlarged, e.g. varnishing or immersion in a liquid, will also reduce the effect of superficial defects (scratches, retouching, etc.) but will increase the contrasts of the image (C. Winther, 1922). It is easy to understand that varnishing confined to certain parts of the image (parts treated with retouching medium for subsequent retouching) leads to markings with well-defined outlines.

All factors increasing the scatter of light by the silver deposit will obviously exaggerate the differences in rendering due to the two methods of illumination. These differences are more particularly marked in the case of a negative of coarse grain than with a negative of fine grain emulsion.

Enlargement with a condenser requires a new adjustment of the light-source for each variation in the scale of enlargement. To avoid these many adjustments, a sheet of ground glass is sometimes fitted between the condenser and the negative to be enlarged. The ground glass is thus uniformly illuminated, and its scatter is predominantly towards the lens, this action being then the sole advantage of using the condenser. The results thus obtained differ little from those with uniformly diffused light.

Finally, the graininess of the negative image is very much less apparent in prints enlarged by diffused light than in prints enlarged with a condenser. It is often found that an enlargement of 10 times with diffused light shows less granulation than one of 3 times with directed light.[2]

[1] The variation in contrast when passing from "directed" light to diffused light is somewhat decreased when the lens aperture increases (H. Bäckström, 1921; G. Boutry, 1934).

One and the same negative having been enlarged in different types of enlarger, equivalent results have been obtained with papers of which the gradation had respectively as logarithm—

Directed light (clear bulb, condenser)	1·1
Opal bulb and condenser	1·0
Clear bulb, opal diffuser	0·9
M-tube mercury vapour lamp and ground glass	0·8

[1] F. F. Renwick and O. Bloch (1916) have found that the relation between the two densities D_* in diffused light and $D \parallel$ in directed light is of the form: $\log D \parallel = a \log D_* + b$, the values a and b varying from one negative to another according to the emulsion used and the methods of treatment.

With a negative of which the densities measured in diffused light ranged from 0·40 to 1·90 (opacities of 2·5 to 80, i.e. an extreme range of $80/2{\cdot}5 = 32$) there was found, with directed light, densities of 0·78 to 3·53 (opacities of 6 to 3,400, i.e. an extreme range of $3{,}400/6 = 570$, which no sensitive surface is capable of recording).

[2] The cause of these differences is easy to comprehend if it is borne in mind that, in enlargement with directed light, the image of a point is formed by a narrower pencil

753. **Negatives Best Suited for Enlarging.** The graininess of a negative being always greater as the densities are higher (L. A. Jones and N. Deisch, 1920), it is necessary to avoid all circumstances likely to increase the density of the image uselessly, e.g. over-exposure, fogging of various kinds, over-development (particularly as with nearly all developers graininess increases much more rapidly than density) and all factors which may cause incipient reticulation, such as a too warm developer, a warm fixing bath not containing a hardener, and prolonged washing in hot weather. If the water available is highly charged with minerals, precautions must be taken to avoid any deposit of lime on the negatives. Care must also be taken to avoid dust settling on the negatives while they are drying.

The increase of contrast when enlarging with a condenser is of value in enabling the best use to be made of correctly-exposed and somewhat under-developed plates. Such negatives are also suited for enlargement by diffused light on contrasty papers.

Negatives which have been retouched or negatives with small defects may usefully be varnished, or at least rubbed with an encaustic paste, being then best enlarged by diffused light.

754. **Art and Enlargements.** It is often said that a photograph becomes artistic by the sole fact of its enlargement. A badly-composed photograph gains nothing by enlargement, which can neither rectify the sorry effects due to a bad choice of viewpoint nor remedy the false values due to unskilled technique.

On the other hand, it cannot be denied that a satisfactory photograph, or a satisfactory portion of a photograph including too wide a field, can gain enormously by enlargement, which by lengthening proportionally the principal distance (§ 23) enables the picture to be viewed under more favourable conditions (§ 27) and, by decreasing the often excessive sharpness of very small negatives, can bring about the simplification necessary in any picture with aesthetic claims (§ 309).

of light rays. A black patch will therefore be produced in an area of light tone if a part of this pencil has been able to pass between several clumps of grains. In enlargement with diffused light, where all possible directions of the incident light have united in forming the image of a point, the chances that some light-rays can pass freely between the clumps of grains are nearly the same for all points of the image.

755. **Apparatus for Enlarging.** For many years the only apparatus available for enlarging were, for use with daylight (diffused light), the triple-bodied camera (§ 149) and the *fixed focus automatic enlargers* or *enlarging boxes* used almost exclusively by amateurs, or, for use with " directed " light, *enlarging lanterns* comprising a lamp house, condenser, negative carrier, and, joined to the latter by a bellows, the lens board; the image was projected on a vertical panel fixed to a wall or mounted on an easel.[1]

A new type of enlarger, employing diffused artificial light, was introduced commercially in 1918. In this the optical axis is vertical, so as to save space in the dark-room and facilitate placing the paper in position. These *vertical enlargers* have become very popular, and many makers have manufactured very different patterns, some of which may be used as copying cameras.

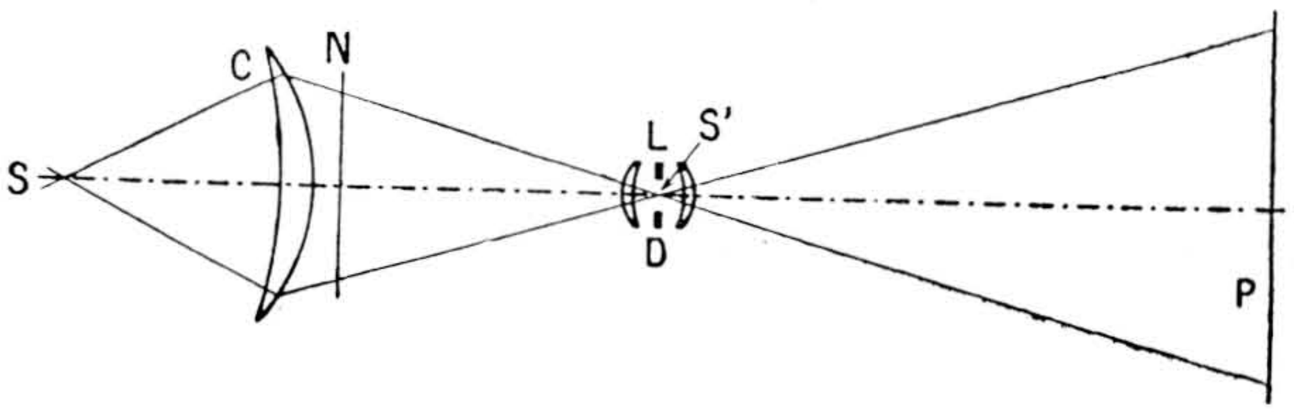

FIG. 192. IDEAL OPTICAL SYSTEM OF CONDENSER ENLARGER

(*a*) ENLARGEMENTS BY DIRECTED LIGHT

756. **Principles of Enlargement by Directed Light.** Let us consider a lens L (Fig. 192) and a drawing on glass N placed perpendicularly to the optical axis, in such a position that a sharp and enlarged image of N is cast by the lens on the plane P. Let us assume that at C, on the other side of N, there is an achromatic and aplanatic convergent system, the optical axis of which coincides with that of the lens, and that at S, on the optical axis common

[1] Mention may be made of the solar enlargers used in the period of wet-collodion, and which were to a certain degree comparable to the dark-room camera § 150). The negative carrier was fitted to an outer wall, and a lens panel connected to the negative carrier by a bellows. The image was projected on to a movable easel travelling on rails inside the dark-room. The light was either " directed " or diffused. In the former case a mirror, adjustable from inside, threw on the condenser a beam of sunshine which was maintained parallel to the optical axis. With diffused light, a mirror reflected the image of the sky on to a sheet of ground glass.

to the system, there is a point source of light, of which the image, also reduced to a point, is formed at S' at the centre of the entrance pupil.

Under these ideal conditions, which can never be completely realized in practice, the lens could, without any disadvantage, be of poor quality (or even absent) without affecting the qualities of the image (or shadow) projected at P. The drawing N is, in fact, projected on P from the projection centre S', as the beam issuing from the condenser C is assumed to be aplanatic. Each point of the drawing N is traversed by one ray only, and in particular the intensity of the image formed at P is entirely independent of the size of the stop D. In the case where the image S' of the light-source does not coincide with the centre of the entrance pupil, the sole effect of a gradual closing of the stop D will be to intercept some of the more oblique rays, thus limiting the extent of the part of the plane N of which the image is projected at P, but without affecting the intensity or the sharpness of the central area remaining.

Barring very rare exceptions (reproduction of a line drawing perfectly free from veil), the negative or positive placed at N is more or less a scatterer of light. The whole of the light emerging from such a negative or positive is no longer directed; a fraction of this light is scattered and therefore covers the whole aperture of the lens. The combination of condenser and lens does not therefore usually form a single optical system, and therefore its "optics" call for somewhat detailed consideration from the practical standpoint.

Ordinary condensers, made of roughly-moulded lenses, are neither achromatic nor aplanatic;[1] and, moreover, the light-sources employed for enlargement or projection are never luminous points. There is therefore no point of assembly S' of all the rays issuing from the condenser, but merely a concentration of the beam on a surface, which is greater as the source of light is larger and the aberrations of the condenser are more considerable.

In the conditions which prevail in practice, the case is intermediate between illumination by directed light and illumination by diffused light, but with a marked predominance of directed light. From each point of the image there emerges a cone of rays which more than covers the whole surface of the lens, but with an intensity predominating round the straight line joining the centre of the entrance pupil to the point in question. If the lens is of poor quality, stopping down may then improve the definition a little in the centre of the projected image, reducing the intensity very slightly. But its chief effect is to intercept the best part of the beams forming the image of the margins, only the diffused light being retained, and the consequence of this is to restrict the field which is uniformly illuminated.

Whereas, under ideal conditions, the illumination of the image would depend solely on the intrinsic brilliancy of the light-source used, this is not the case in practice. The brightness of the light is not the sole factor, although its influence is still dominant. For instance, if an incandescent mantle is replaced by another of twice the linear size, furnishing a quadruple illuminating surface with a gas consumption eight times as great, the illumination of the image will not be more than doubled at the most. It is sometimes of advantage, from the point of view of the sharpness of the images, to stop down a light-source of large size in spite of the slight loss of light resulting from the elimination of the portions of the light farthest from the optical axis.

757. Condensers. The condenser of old-time "magic lanterns" was a half-sphere of glass. The condenser has been slightly improved by being formed of two identical plano-convex lenses the poles of which are almost in contact.[1] Occasionally condensers are used of which the components, named in their order, starting from the light-source, are a converging meniscus (concave surface turned to the light) and a bi-convex lens, or a converging meniscus (turned as in the preceding case) followed by the two plano-convex lenses of an ordinary condenser. As the focal length of this *triple condenser* can be shorter than that of an ordinary condenser

[1] It may be noted that a poor lens used with an aplanatic condenser can give a better image, especially with a negative or positive which does not scatter light, or only does so slightly, than a perfect lens used with a bad condenser.

[1] As the pole of a plano-convex lens is the nodal point for the space towards which the convexity is turned, it will be seen that the *interstice* of the combination (§ 70) is equal to the distance between the poles, usually $\frac{1}{25}$th in. The resulting focal length is therefore very little different from half the common focal length of the two elements, the nodal points of the complete system dividing the total thickness of the condenser into about three equal parts. The aberrations of such a condenser are at their minimum when it can be used symmetrically, the light-source and the entrance pupil of the lens then occupying the focal planes of the single plano-convex lenses.

of the same diameter, the light-source can be brought nearer, thus utilizing a larger portion of the light emitted.[1] We may also mention the recent development of aplanatic condensers, including at least one surface of non-spherical curvature, up to diameters of 25 in. (L. V. Foster, 1926), and of condensers with zonal aberrations adjusted so as to attenuate the falling off of light from the centre to the margins of the projected image (Zeiss, 1931).

Condenser lenses, being always comparatively thick[2] and made of glasses the transparency of which is not perfect, absorb an appreciable fraction of the rays which reach them and thus gradually become heated, sometimes attaining high temperatures with a resultant risk of fracture in case of sudden cooling by a current of air.[3]

The usual mounting of condensers, a tube in which the lenses are kept at their normal separation by a cylindrical sleeve and held firm by screwed rings, could very easily be improved. The screw threads are ridiculously fine in regard to their diameter, so that putting together a condenser after cleaning is a veritable feat of patience. Also, while ventilation holes are provided to allow of the expansion of air without interior pressure, they are more or less closed by the sleeve (on the lantern) into which the condenser is fitted, so that they do not allow the renewal of the air within. Various improvements have been devised in the construction of condensers, but these advances have not been applied. For example, segments have been cut out of the lenses permitting the free circulation of air between the glasses and their mount (L. Turillon, 1902); or the screw mount has been replaced by a mount with elastic claws, both permitting the free circulation of air and simplifying the work of taking to pieces and putting together again,[1] as well as the replacement of lenses, in the diameter of which there is always a certain latitude (G. M. Coissac, 1905).

758. Light-sources. The first enlarging lanterns were fitted with paraffin oil lamps with round burners, or, where great intensity was required, with arc lamps. Lights of intermediate power subsequently came into use, particularly incandescent mantles[2] and acetylene burners. In all cases where electric current[3] is available the invariable practice to-day is to use the arc or an incandescent lamp of the special type made for projection. In an arc lamp run on continuous current, the region of maximum brilliancy is the crater hollowed at the tip of the positive carbon. This crater must be situated on the optical axis and turned towards the condenser. In an arc lamp run on alternating current the two carbons play the same rôle alternately, and as they cannot both occupy

[1] It is easy to get a clear idea of the magnitude of the aberrations of a condenser by examining the shape of the beam issuing from the condenser by arranging a dark background behind the beam and blowing smoke into the latter. Or the beam may be cut along its axis by a plate of matt aluminium on which the caustic (envelope of rays of light) appears very clearly and can be photographed. This experiment enables a clear idea to be obtained of the effect of the size and position of the light-source.

For a more exact test of a condenser, the light-source is replaced by an opaque screen of the same size and shape as the light. This is stuck on to a diffusing screen, e.g. ground glass, which is illuminated as uniformly as possible. If the condenser is perfect and perfectly adjusted (§ 759) the easel will be uniformly dark when viewed in the ordinary way. All parts of the easel which are illuminated under these conditions correspond to zones of less illumination in normal working (J. T. Beechlyn, 1922).

[2] In cinematograph projection, use is made of lenses in "staggered" formation (similar to those in lighthouses) which can be very much thinner, and therefore absorb much less light. Such condensers cannot be used in "still" projection and enlarging, as the negative or positive is quite close to the condenser, and the image of the latter would appear in the projected picture.

[3] Cases where the lens nearest to the light has melted have been observed with arcs of high power as used in cinematograph trichromatic projection. To avoid the various possible troubles, use has been made of lenses of quartz or fused silica for the element nearest the light. The low expansion coefficient of these substances renders them almost insusceptible to violent changes of temperature. Special glasses have also been used for this purpose. Sometimes the protection of the condenser against heating by convection has been effected by separating it from the light by a sheet of mica.

The substitution of a polished toric surface for the sharp edge or ground cylindrical surface that usually forms the edge of condenser lenses would effectively protect the latter against breakages by sudden changes of temperatures, which fractures generally start at a crack in the glass (K. Martin, 1931).

[1] Other mountings that facilitate taking apart and putting together for periodic cleaning are those with hinges or with a bayonet joint.

[2] Upright mantle burners for gas (or methylated spirit or petrol vapour) are best fitted with an iron chimney with an aperture of about $\frac{4}{5}$ths in. diameter opposite the part of maximum brightness. The inverted burner can be used with a mirror at 45°, reflecting the light in the direction of the optical axis.

[3] In as far as electric current can be compared with a current of liquid, the difference in potential, measured in *volts*, represents the difference in height between the free surface of a tank and the outlet, while the intensity, measured in *amperes*, represents the flow; the power, measured in *watts*, is the product of the number of volts by the number of amperes.

the optimum position, the efficiency is necessarily bad during one of the cycles, that is, during half the time of working. On the other hand, electric current is usually supplied at 230 volts, and the usual arcs only absorb 45 volts.[1] While, with alternating current, there is the resource of lowering the voltage at will with a transformer without losing much power, there is, with continuous current, no means except absorbing the excess voltage in a resistance where the electrical energy is converted into heat.

The efficiency of the arc lamp is thus poor with continuous current (about 80 per cent of the energy consumed being lost in the resistances), while its light efficiency is mediocre with alternating current. Owing to the great improvements made since 1917 in the manufacture of the incandescent lamps specially intended for projection work, they have practically supplanted the arc everywhere, the latter being now used only in "still" projection lanterns and cinematographic projectors where very high luminous power is required.

The incandescent lamps specially designed for projection work differ from the ordinary lamps for lighting in the arrangement of the filament, which is formed of several helical windings[2] arranged parallel to each other in the same mean plane. There are two windings for lamps of 12–16 volts, and four for those of 25–220 volts. For a given consumption it is more advantageous to choose a lamp of low voltage and large amperage, for the larger filament can be brought to a higher temperature, which enhances the luminous efficiency,[3] and, even more, the actinic efficiency. Furthermore, the helical windings can be closer without risk of arcing between adjacent windings. This reduces the illuminating surface and thus improves the action of the condenser. Some of these lamps are made to work vertically, with the holder beneath, while others are intended for use horizontally, according to the arrangements of the lamp house,[1] and it is essential that the lamps be used in the position for which they are designed. The normal working condition of these lamps corresponds to a considerable over-running of ordinary lamps, and their life is usually limited to 100 hours.[2] Care must be taken not to over-run them farther, and it is well to have instruments enabling the current to be measured and regulated.[3]

With continuous current it is not possible, except with complicated arrangements or considerable loss of electrical energy, to use lamps of a voltage different from that of the supply or, at any rate, of slightly lower voltage.[4] With alternating current it is best from all points of view to install a transformer, bringing, for instance, the difference of potential to 22 volts for a 20-volt lamp in series with an adjustable resistance.

For the purpose of comparison the following table gives some particulars of 300-watt projection lamps of a reputable make—

Volts	Consumption in watts per candle-power.	Size of the incandescent grid mm.	Brightness in candle-power per sq. cm.
20	0·40	8 × 9	1,040
35	0·40	9 × 10	830
50	0·43	9 × 11	710
100–130	0·46	13 × 15	330

[1] Enclosed arcs using about 90 volts, are so called because of the enclosure of the very long arc in a special glass cylinder, without which the arc would be blown out by the slightest draught. The enclosure also limits the renewal of air and consequently the combustion of the carbons. These arcs are used, particularly in England, for enlarging lanterns, but no arcs of this type are made in France, at least for this purpose.

[2] Lamps for 6-volt current have only one winding; lamps with several windings must be fitted to rotating holders so as to turn the luminous plane at right angles to the optical axis.

[3] While the intrinsic brilliancy of the filament does not always attain 100 c.p. per sq. cm. in lamps of 110 volts, this brilliancy can exceed 1,000 c.p. per sq. cm. in lamps of low voltage.

[1] Lamps for projection were formerly made with bulbs of large size. The use of less fusible glasses has permitted smaller sizes to be adopted. The vertical lamps are now nearly always tubular in shape (in the early tubular lamps the tube used after long use would blow out at the level of the filament under the pressure of the gas inside).

[2] In even the best makes it is impossible to ensure that the life of all lamps is as long as the average, some lasting for a much shorter time.

[3] A voltmeter is used for checking lamps of 60 volts and over. An ampere-meter (fitted in series) is preferable for lamps of low voltage. Any increase of voltage shows itself by an increase of amperage, and it is best, each time, to measure whichever of these two quantities varies the more rapidly.

[4] Owing to the considerable variations of voltage at the different hours of the day, it is advisable, in order to keep the lamp at a constant rate and avoid being led astray in estimating exposures, to select lamps of 100 volts for current of 110 volts, the difference being absorbed by an adjustable resistance or rheostat.

A rheostat is essential for use with lamps of high intensity in order to enable them to be lighted gradually (§ 292, footnote).

As the illuminating plane formed by the juxtaposition of the windings emits light from both its surfaces, a sphero-concave mirror[1] is placed behind the lamp to prevent waste of light from the rear surface. This mirror is mounted on an adjustable support and can be brought into a position such that the images of the windings are formed in the space between two adjacent windings.[2] Under these conditions, the light that would have been lost is sent back to the condenser, the whole of the filament and of its image thus forming an almost continuous luminous surface. When the reflector is properly adjusted, the light-efficiency of the lamp is increased by 50 to 70 per cent.[3]

[1] For some time lamps were used with a spherical bulb silvered over a more or less large portion of its surface. The optical quality of such a reflector leaves much to be desired, and as these lamps were sold at higher prices the cost soon exceeded that of an adjustable mirror of good quality.

[2] To obtain this adjustment it suffices to remove the lens or to bring it very near the condenser and to receive the image of the filament on a sheet of white paper held in a suitable position by an assistant. The mirror is then set back until the reflected image is also sharp (the centre of the curvature of the mirror is then in the plane of the filament). A very slight tilting movement then causes the two images of the filament to become juxtaposed.

[3] In a properly adjusted apparatus only about 18 per cent of the total light emitted is utilized in the absence of a reflector. This efficiency is increased to about 30 per cent by using a reflector under proper conditions.

It may be added that with incandescent lamps the adjustment once made remains unaltered, whereas arc lamps, even with the usual automatic types, require frequent adjustment.

759. Adjusting the Position of the Light. The adjustment of the position of the light must be preceded by the projection of the image to the required size and in rough focus (§ 768). After this preliminary adjustment has been effected, the negative carrier is taken out and the light is centred by examining the illuminated disc in the plane that will be occupied by the sensitive surface.

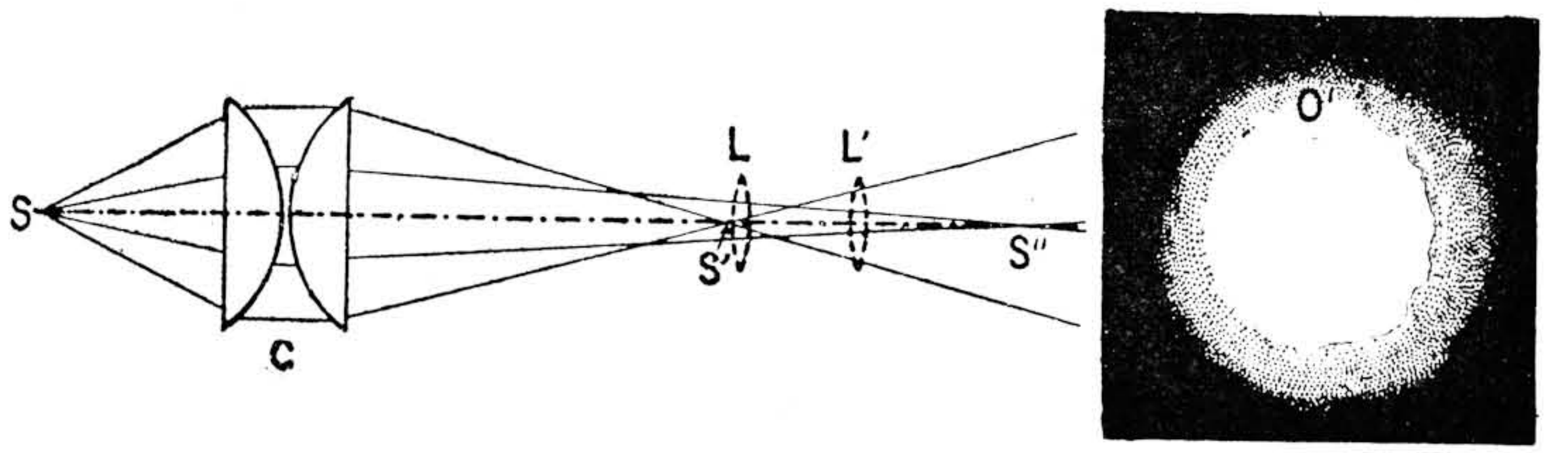

FIG. 193. EFFECT OF DISTANCE OF ENLARGING LENS FROM CONDENSER

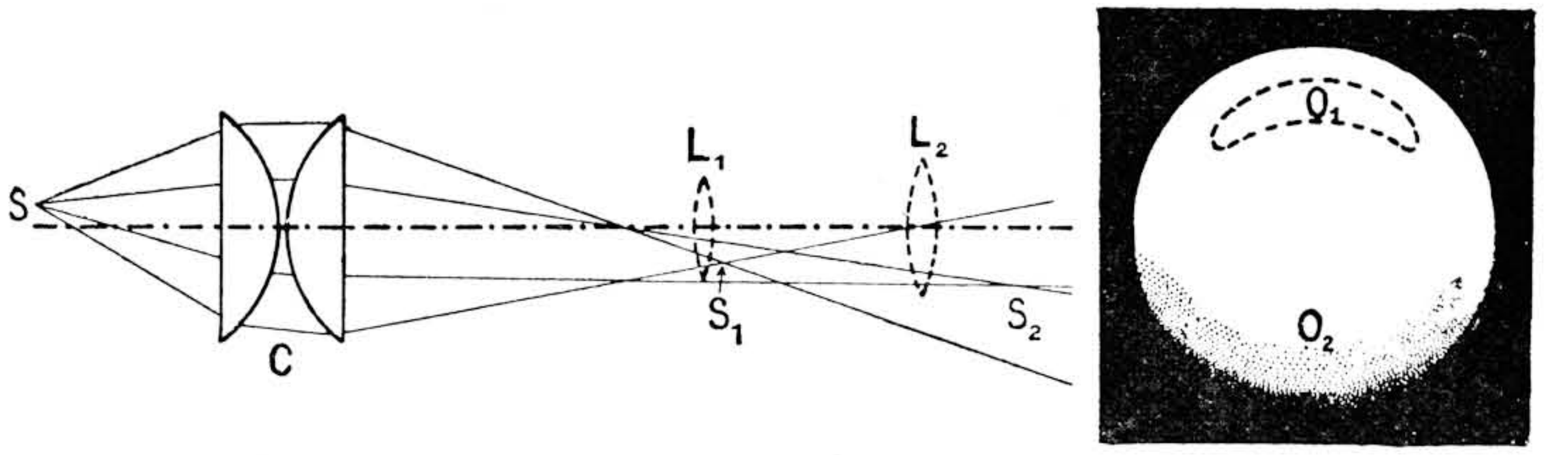

FIG. 194. EFFECT OF DECENTRING OF LIGHT-SOURCE FROM OPTICAL AXIS

If the centring is perfect, this disc will be uniformly illuminated. As a rule this will not be the case, faults in centring revealing themselves by characteristic shadows.

If the light-source is centred on the optical axis, but is at an incorrect distance from the condenser, the illuminated disc appears bounded by a darker zone which is bluish (light too near the condenser) or reddish (light too far from the condenser). Let us suppose (Fig. 193) that the condenser and the lens occupy respectively the positions C and L, and that the light-source S is in such a position that its image S', produced by the marginal portions of the condenser, is formed a little in front of the lens. Then all the light transmitted by the condenser will be utilized by the lens, and the latter will produce on the easel a fairly sharp and uniformly illuminated image of the condenser. Let us suppose

that, for an enlargement on a smaller scale, the lens is moved farther away from the negative carrier so as to occupy the position L'. It is obvious that we shall restore the former condition by bringing the light-source S nearer to the condenser C until the image S' is close to L'. If this is not done, i.e. if the light is left too far from the condenser, the marginal parts O' of the disc projected on the easel are much less illuminated, being lighted only by the rays least refracted, that is, the red rays.

If the light is not centred on the optical axis common to the condenser and the lens (Fig. 194), decentred shadows appear, reddish in the position O_1 or bluish in the position O_2, according as the lens is in the position L_1 or L_2, i.e. near the image S_1 of the source produced by the marginal rays, or near the image S_2 of the source formed by the central rays. (In the figure the spherical aberration of the condenser has been greatly exaggerated.)

It may therefore be said that in all cases a blue shadow indicates that the light must be moved farther from the condenser, whilst a red shadow is a sign that the light must be brought closer. Finally, any unsymmetrical form of the illumination of the disc shows that it is necessary to shift the light transversely in the direction indicated by the centre of the shadow.

If, for instance, the condenser has a focal length of 5 in. and the negative is at 2/5th in. from the plane surface (of the condenser) nearest to it, and the degree of enlargement is first 2, and then 10, in each case with a lens of 6 in. focal length (the ultra-nodal distances from the negative to the lens being $6\frac{3}{5}$ in. and 9 in., the ultra-nodal distances from lens to condenser being about $7\frac{3}{5}$ in. and 10 in., with a condenser of a total thickness of about $1\frac{3}{4}$ in.), then it will be necessary for the light-source to be brought to a distance of about $9\frac{1}{2}$ in. and then to about 5 in. from the condenser, that is a shift of $4\frac{1}{2}$ in. when passing from one position to the other.[1]

760. Enlarging Lanterns. The usual types of enlarging lanterns are described in the catalogues of the principal dealers, so that it is only necessary to make a few remarks and to indicate the conditions to be observed in order that the adjustments described in the preceding paragraph shall be possible.

According to the maximum size of the negative to be enlarged, it is preferable to use a condenser of the diameter shown in the following table—

Nominal size, in. . .	$2\frac{4}{5} \times 2\frac{4}{5}$	$3\frac{1}{5} \times 3\frac{1}{5}$	$2\frac{1}{2} \times 3\frac{1}{2}$	$3\frac{1}{2} \times 4\frac{3}{4}$	$5\frac{1}{10} \times 7\frac{1}{10}$	$7\frac{1}{10} \times 9\frac{1}{2}$	$9\frac{1}{2} \times 12$
cm. . .	7 × 7	8 × 8	6·5 × 9	9 × 12	13 × 18	18 × 24	24 × 30
Diagonal, in. . . .	4	$4\frac{1}{2}$	$4\frac{1}{2}$	6	9	12	$15\frac{1}{2}$
cm. . . .	9·9	11·3	11·1	15	22·2	30	38·4
Diameter of the lenses, in. .	4	$4\frac{1}{2}$		$6\frac{1}{2}$	9	13	16
cm. .	10·3	11·5		16	23	32	40
Focal length in. . .	3	$3\frac{1}{5}$		$4\frac{1}{2}$	7	10	12
approx. cm. . .	7·5	8		11·5	17·5	24·5	30

N.B.—The conversion of centimetres into inches is not absolutely accurate, but is near enough for practical purposes.

The lens must not be chosen of too short a focal length, especially if it is wished to enlarge on a large scale, for it may be then impossible to project the image of the light-source near to the entrance pupil of the lens; insufficient length of the lamp house may make it impossible to move the light far enough back. Besides this, if the light is at a distance from the condenser more than twice the focal length of the latter, the light-rays converge on leaving the first glass, so that the condenser does not illuminate so large a circle in the plane of the negative which is being enlarged. On the other hand, a lens of too great a focal length renders it necessary to have a room of considerable length (§ 62). In practice it is best to select a lens of which the focal length is at least equal to that of the condenser and does not exceed it by more than 30 per cent.

[1] In order to avoid having to alter the distance of the light afresh for every variation in enlargement, it has been suggested that the negative should be kept constantly in the focal plane of the enlarging lens and to fit the latter with a supplementary lens. A different supplementary lens is used for each different degree of enlargement. If F is the focal length of the lens, it is necessary for an enlargement of n times to employ a convergent supplementary lens of a focal length equal to nF (A. Lockett, 1920).

It should be noted that a lens intended for enlarging by directed light should have an iris diaphragm of metal, as leaves of ebonite may be deformed or burned (§ 72).

The lamp-house should be large enough to accommodate modern high-power illuminating apparatus. It must be well ventilated, and the ventilation holes must be perfectly light-trapped. The run-way of the lamp support must be long enough to allow of all the variations in adjustment that may be required for various degrees of enlargement. Doors, with observation holes fitted with ruby glass for watching the light, must give free access to the various regulating devices and to the condenser. A slot should be provided for a sheet of ground glass. This is best placed against the surface of the condenser farthest from the light, and enables the lantern to be used for enlarging with diffused light if desired. The position of this ground glass must be far enough from the negative for its structure not to appear in the enlargement.

The negative carrier should slide easily into its slot, but without play. Sometimes the negative stage is movable in relation to the condenser, to which it is then connected by a bellows. This is of value in cases where it is desired to enlarge negatives smaller than the normal size, because they can be placed in a position where the converging beam of light from the condenser is of a smaller section, and thus affords a greater concentration of light.[1]

It is a good thing for the negative carrier to be capable of being de-centred, and it is desirable that the lantern should include no other part capable of being de-centred, at any rate when the lantern is being used with directed light.

[1] It may be necessary, in order to benefit by this advantage, to replace the usual lens by one of shorter focus. To avoid having to use another lens the use has been suggested of a divergent lens (e.g. plano-concave) between the condenser and the negative and close to the latter, so as to shift back the smallest section of the beam issuing from the condenser (G. Massiot, 1905).

(*b*) Enlarging with Diffused Light

761. Uniform Illumination with Diffused Light. By placing a light-source near the focus of a condenser we obtain uniform illumination of a diffuser placed on the other side of the condenser. While this arrangement has been actually used in some enlargers working with diffused light, it is usual to avoid in such cases the expense of a condenser, which can easily be dispensed with.

In the absence of a condenser, means must be taken to ensure the fairly even illumination of the diffuser employed.[1]

While, in the case of negatives of very small size, the light afforded by an electric lamp with an opal bulb may be considered as uniform, it is necessary in all other cases to use simultaneously several lamps suitably arranged,[2] or to reduce the excessive transmission in the central part of the diffuser.[3]

To reduce the excess of light in the part of

[1] As a reminder we must mention the use (Schmidt and Haensch, 1913), of the Ulbricht's integrating sphere for uniformly illuminating the negative to be enlarged, commonly used in photometric work. This is a hollow sphere with matt white internal walls in which there is an excentred aperture for the light and an aperture for the negative carrier which is shielded from the direct rays from the lamp.

[2] Very satisfactory results have been obtained by multiplying, not the number of lamps but the virtual images of a single lamp, by means of plane mirrors arranged symmetrically around the lamp, e.g. to the number of 6 or 8, forming a 6-sided or 8-sided box, the edges of which are placed parallel to the optical axis. (J. W. Gordon, 1912.)

[3] The table below shows the quantity of light usually passed by the diffusers named. The diffusers are at a distance of about $4\frac{1}{2}$ in. from a 200-watt lamp, used with or without a reflector (8-cm. spherical mirror of silvered glass). The figure 100 is taken as representing the amount of light transmitted without diffuser or reflector. The table also shows the relative intensity of the illumination of the diffuser measured at 4 cm. ($1\frac{3}{5}$th inch, and 8 cm., $3\frac{1}{5}$th in.) respectively from the foot of the perpendicular let fall from the lamp to the diffuser, 100 representing the illumination at the foot of this perpendicular. Where two identical diffusers

Diffusers tested	Without reflector			With reflector		
	Transmission	at 4 cm.	at 8 cm.	Transmission	at 4 cm.	at 8 cm.
Flash opal	17·7	79%	43 %	54	76%	61%
1 ground glass (sand-blasted)	38·2	26%	3·5%	178	43%	40%
2 ground glasses	26·1	39%	8·5%	93	47%	43%
1 tracing paper	31·2	35%	10 %	112	53%	40%
2 tracing papers	20·3	62%	25 %	53	66%	55%

the diffuser directly facing the lamp, it is possible to use a lamp of which the bulb is ground or silvered at the tip. The central area of the diffuser is then lighted only by diffused light. When two diffusers are used, one behind the other, the absorption of light by the centre of the diffuser nearest the lamp may be considerably increased. For instance, in an automatic enlarger (one in which the various movements are linked together) made in the United States to the specification of R. S. Hopkins (1918), the first diffuser consists of a sheet of glass of which only the centre is ground, with vignetted edges, while the second diffuser is a glass ground uniformly of fine grain. The same result can be obtained by varnishing or oiling the marginal areas of an ordinary ground glass and by increasing the central absorption by pencilling, or again by placing on a sheet of clear glass cut-outs of tracing paper, or, finally, by using as a " vignette " a negative obtained by exposing a slow plate behind a yellow filter to the light of the lamp, the plate during this exposure being placed in exactly the same position that it will occupy when enlargements are being made. By suitable exposure and development this negative will show a graduation between the centre and edges compensating satisfactorily for the inequalities in illumination.

Whatever the method of illumination employed, it is necessary to see that the diffusers used are of size distinctly greater than that of the largest negative to be enlarged if the marginal areas of the image are to be satisfactorily illuminated, even when enlarging on a relatively large scale, since in this case the extreme beams include the maximum angle of field.

Instead of securing uniform illumination of the diffuser, it is often advantageous to increase slightly the illumination of the marginal portions, so as to compensate for the effect of the obliquity of the extreme beams (§ 54).

762. Vertical Enlargers. The very numerous patterns of vertical enlargers range from commercial models for exact work, built with a rigid frame of cast steel resting on the floor, to the light-weight models for amateurs. These have a framework of sliding steel tubes for placing on a table. There are intermediate types of a semi-professional class with a wooden framework for fixing to the wall of the dark-room.

As a rule, graduations are provided indicating, for various degrees of enlargement, the respective positions of the lens front and of the negative carrier above the board or horizontal table on which the sensitive paper is placed. In many of the present-day instruments, there is an automatic linkage (§ 69) to keep the negative and the lens in conjugation with the easel. The operator is thus relieved of all attention to focussing, the movement of one part ensuring the correlated movement of the other, so that the image is caused to pass successively through all the possible degrees of enlargement.[1] An additional hand-focussing adjustment (helicoidal lens mount) should be provided. In spite of their obvious advantages the high cost of these fitments prevents their general use.

Owing to the diversity of the types of vertical enlargers, we advise that their detailed descriptions be studied in the leaflets and catalogues issued by the makers.

763. Box Enlargers. Box enlargers, often of tapering shape, are, in fact, small triple-body cameras of very simple construction consisting of a rigid box carrying, at positions suitable for a given degree of enlargement, the negative (covered at some distance by a piece of ground glass), the lens (usually of a cheap, simple type, but greatly stopped down), and a paper holder (which may be a removable dark slide or simply an integral part of the box) in which the paper is pressed flat by a plate against a sheet of glass. These instruments, exclusively designed for use in daylight for enlarging the small negatives made by amateurs, have been manufactured in a variety of patterns, of which only the simplest and lightest have survived. Some of them, made almost entirely of mill-board, give quite satisfactory results so long as they are not subjected to rough usage.

The introduction of vertical enlargers, capable of being used at any time, has led to the manufacture of the better types of box enlargers being abandoned. This is especially the case as regards the patterns permitting of several degrees of enlargement, some of which were of extremely ingenious design.

764. Various Enlargers. From time to time there have been made, for amateur use, attachments interchangeable with the dark slides of a hand camera. These attachments consist of a negative carrier and of a light-box for illumination by diffused light, generally in the form of a

were used in conjunction they were separated by a space of 1 in. (G. P. Cousin, 1916.)

[1] In the case of directed light, such automatic linkage would be very complicated owing to the need for providing a supplementary link between the light-source, condenser, and lens.

matt-white reflector, either plane or parabolic. This is illuminated by one or more lamps placed on the sides in recesses which shield the negative from direct rays. These enlargers are used like a projection lantern, the image being projected on an easel fixed to the wall.

There are also available commercially box enlargers fitted with a light-box for diffused light or with a light-box for directed light adjusted once and for all by the maker.

Finally, many of the photographic cameras taking standard size cinematograph film may be fitted to special attachments, so that the whole forms a vertical enlarger.

(*c*) Practical Enlarging

765. Fixing the Sensitive Paper in Position. With vertical enlargers the placing of the paper is usually done by metal squares or strips which act both as masks with variable openings and as pressure plates, holding the paper flat. Failing these, the paper may be held down by small weights of cast iron or lead placed at the edges and serving also to keep down any mask or strips of opaque paper which may be used to limit the surface to be exposed. The same methods of fixing are applicable to plates or films.

Fixing the paper to a vertical easel[1] by means of drawing pins[2] is practical only if the easel is fixed to the wall or hinged so that it can be turned down into a horizontal position on a rigid support and then returned to the same position that it occupied during focussing. Otherwise there is a risk of shifting the easel when pushing in the drawing-pins. A facing of the easel with cork lino partly removes this objection. It is often preferred to keep the paper flat under a thin sheet of glass in a kind of simplified printing frame, in spite of the fact that the glass sometimes causes a slight diffusion of the light, or a double outline in the images (especially where two very contrasted portions of the picture meet), even when the glass is without flaws and perfectly clean. It is of service to have squares ruled, or a scale in inches, or rectangles corresponding with the various usual sizes, on the easel, or on the board closing the paper frame (or on a sheet of white card used to cover either when focussing).

Sheets of paper of small or medium sizes are held sufficiently by a *masking frame*, i.e. a frame with a cardboard rebate in which a mask of black paper is placed, and the sensitive paper then kept against the rebate by a flap of cardboard hinged to the frame. This frame is slipped under strips of wood or under the heads of one or two screws partially driven into the enlarging easel.

The sensitive paper could also be fixed to a sheet of metal coated with an adhesive varnish (§ 283).

All these devices may be used for holding films. When enlarging on glass plates it is customary to use a printing frame or a dark slide, either of which is attached to the easel by any convenient means.

766. Testing Parallelism of the Negative and Sensitive Paper. In the case of a vertical enlarger the parallelism of the planes of the negative and easel can be readily tested by means of a spirit level. The instrument is first placed so that the easel is horizontal, and then the light-box is removed and tests are made to see that a glass plate put in the negative carrier remains horizontal in all the positions in which the carrier can be placed.

When using an enlarging lantern, the parallelism is tested by sights on a mirror successively applied against the negative carrier and the enlarging easel as described in § 736 for adjusting a copying camera.

767. Placing the Negative in Position. Glass negatives are usually held in a frame with rebates with spring turn-buttons to keep them firm. When several negatives of different sizes have to be enlarged one after the other, one may use either a set of adapters nesting one within the other, or separate negative carriers; the latter are better for holding the negative in position.[1]

It is well to cut down to a minimum the amount of stray light due to successive reflections, both in the lens (§ 57) and in any glasses used to hold a film negative. This is done by masking all the superfluous parts of the negative. In this way much cleaner high-lights and margins are obtained in the enlargements.

[1] At various times attempts have been made to construct easels of light metal covered with a layer of pressed granulated cork, but drawing pins do not usually hold if pushed in close to a former hole. If the enlargements are made in only a few sizes, it would be possible to use hinged frames of the type known (in France) as *stirator*, which hold the paper stretched by all four sides.

[2] Steel pins with glass heads forming small grips are preferable to ordinary drawing pins.

[1] For negatives of small size universal carriers have been made in which the negative is held between movable jaws each fixed to a flexible blind.

When a film negative is being enlarged[1] it is usually sandwiched flat between two glasses, which introduces four additional surfaces for stray reflections, and thus tends to veil more or less the enlarged picture, especially in the absence of a mask stopping all light around the part of the negative being enlarged. The number of marks due to dust or to imperfect cleaning are also increased.[2] The results are much improved if the number of free surfaces is reduced to two by wetting the film with glycerine and then placing it between the glasses (all air-bubbles being removed), as the whole may be considered as one optical medium; at the same time the effect of scratches on either side of the film is eliminated.[3]

In cases where film negatives have often to be enlarged (commercial developing and printing for amateurs and cinematograph film studios), the same result can be obtained more simply by means of a glass trough filled with a volatile fluid which renders unnecessary the washing and drying needed with glycerine. Carbon tetrachloride (a non-inflammable liquid) is generally used; its refractive index is nearly that of the mean refractive index of gelatine, celluloid, and glass (K. C. D. Hickman, 1926). When using a vertical enlarger, a trough with a glass bottom is placed in the negative carrier. This trough contains a small quantity of carbon tetrachloride, and the film is pressed against the bottom by a block of glass with plane surfaces which acts like a paper weight. The under surface of this block carries a mask of tinfoil affixed with gelatine. When using an ordinary enlarging lantern, a vertical glass trough with plane-parallel sides is employed; in this the film is pressed against one of the sides by a piece of glass held by wooden wedges.[4]

In the customary case of enlargement on bromide paper, so as to obtain a positive image to be kept as such, the emulsion side of the negative must be turned towards the lens; the negative must be turned the other way round if the enlargement is to be used to make a Bromoil transfer (Chapter XLIII).[1]

When making enlarged negatives from positive transparencies, the image-side of the transparency must be turned towards the lens in all cases where the enlarged negative is to be used for printing that does not involve reversal of the image. But it is the back of the transparency that must face the lens where the negative is required for single-transfer carbon or for printing on the gelatine-coated bichromated paper of the oil process.

768. Focussing the Picture and Bringing it to the Required Size. The work of focussing the picture and bringing it to the required size is greatly facilitated if the stand of the enlarger is fitted with scales graduated in accordance with trials, supplemented, if need be, by simple calculations (§ 62). Both for focussing and for bringing the image to the right size it is well to replace the negative temporarily by a fogged negative on which inch squares have been ruled with a sharp-pointed stylus, or by a copy negative (same size) of paper ruled in inch squares. The measurement of the squares on the easel (which may be done by squares ruled on the easel) greatly simplifies the estimation of the degree of enlargement,[2] and sharpness is often easier to gauge in the image of a fine cut in an opaque layer than in an image with a more or less definite outline.[3]

[1] To prevent heating of the film during exposure from causing shrinkage and warping, it is well to dry it by moderate warming before exposure, and to cover it with a thick glass limiting the amount of heating and ensuring flatness.

[2] In the enlarged image there are sometimes annular fringes around each point of contact of the film with one of the glasses (§ 504, footnote).

[3] This immersion would, if required, permit the enlargement by "directed" light of films with a matt back surface (§ 229).

[4] A thread may be passed through two holes on the top edge of the film, so that it can be held at the correct height.

[1] It is, of course, assumed that the negative was not reversed when made.

[2] Those with a fondness for mathematical calculation can work out the distance to move the negative in relation to the easel, or vice versa, in order to obtain an enlargement of given size. After focussing accurately without regard to the size, measure on the easel the length L' occupied by an object which on the negative has a length l and which is required to have a length L in the enlargement. In order to change the adjustment at this setting to that required, it is necessary to increase (if L' is smaller than L) or to reduce (if L' is greater than L) the distance from the negative to the easel by the length

$$\left[\frac{L'-L}{l}-l\left(\frac{1}{L'}-\frac{1}{L}\right)\right]F$$

then refocussing the lens until sharpness is again attained.

[3] As the operator intercepts the projected image if he tries to approach the easel to examine the sharpness of a detail, there has been placed on the market an accessory comprising a base for application on the paper, a sloping mirror and an ocular so fixed that its reticule has its virtual image in the plane on which the base rests. The image is therefore sharp on the easel when it appears sharp through the ocular (A. von Lagorio, 1931).

When a new lens or a new light is being used for the first time, it is well to see that the sharp visual image coincides with the sharp photographic image. For this purpose the ruled focussing plate is enlarged on to a strip of paper arranged obliquely, e.g. at a slope of 1 : 10 to the easel. A pencil mark is made on the line which appears sharpest, and after development the line which is sharpest is picked out and the distance between it and the mark is measured; the displacement of the plane of sharpness will then be 1/10th of the distance measured.

In choosing the scale of enlargement, remember that portrait enlargements termed of "natural size" must always be slightly smaller than in nature, as otherwise they will appear much too large under the usual conditions of viewing.

If the dimensions of the apparatus or of the room do not permit of the required enlargement being obtained with the usual lens, one of shorter focal length may be substituted, or the usual lens may be fitted with a supplementary converging lens (§ 117), so as to form a system of focal length shorter than that of the usual lens. The focussing will then have to be checked by the method described above. The aberrations introduced by such a supplementary lens frequently have a favourable effect in reducing excessive sharpness.

Enlarging may also be done in stages, first making an enlarged transparency and then, from it, a negative enlarged to the required scale.

769. Soft-focus Enlargements. The various methods for producing images of "soft focus" (§§ 310 to 313) are applicable to enlarging, but it must be noted that the afocal supplementary lenses mentioned in § 126 can be used only with diffused light; in the case of enlargement with directed light their effect would vary with beams of various degrees of obliquity.

One of the most commonly employed methods for modifying excessive sharpness of enlarged images consists in placing between the lens and the sensitive paper a piece of bolting silk, canvas, bolting cloth, or muslin (all preferably black). When such a fabric, stretched on a wooden frame or on a sheet of glass, is laid against the sensitive paper, it simply reduces the contrasts of the image (E. H. Farmer, 1905), giving it a pattern which, as a rule, is not objectionable. As the fabric is gradually removed from the plane of the sharp image an increased degree of diffusion is imparted to it. It is even possible to stretch one or more thicknesses of black chiffon on the lens hood, securing them by a rubber band. If the fabric is used at a considerable distance from the sensitive paper, it is necessary to place it in position before focussing, and to allow for its effect in prolonging exposure.

770. Ascertaining the Exposure. When the enlargement is made with diffused light, and in this case only, the trials for finding the correct exposure may be made with a very small strip of paper exposed in contact with the negative to be enlarged in a printing frame placed in the same position where the large sheet of paper will be placed for enlargement. This test must, of course, be made only after the various adjustments have been carried out.

In this case, and as a rough first indication,[1] the optimum exposures for the enlargement of a given negative with a given light, a given sensitive paper, a given lens always used with a given stop, are proportional to the values $(G + 1)^2$, G representing the degree of enlargement. If, for instance, a given negative is successively enlarged 2, 3, 4, 5, etc., times, the optimum exposures will be in the proportion to the numbers 9, 16, 25, 36, etc.

This method of calculation fails with directed light, for the flow of light transmitted by the condenser varies with the adjustment of the distance of the light-source,[2] and if the light is of comparatively large size its image may be larger than the surface of the lens aperture.

In this case the trials for ascertaining the exposure must of necessity be done on a strip of paper placed on the easel and illuminated by the enlarged image in the same conditions under which the final print will be made.[3]

[1] Admitting the Schwarzschild law (§ 202) to be applicable within the range of luminations considered, the exposure time is proportional to $(G + 1)^{2/p}$; now, p can have values less than 1, and a paper has been reported with $p = 0{\cdot}67$. In this case, when passing from $G = 2$ to $G = 5$, the exposures should be in the relation 1 : 8, and not in the relation 1 : 4 as specified by the approximate rule given above.

[2] According to whether one accepts or does not accept the law of reciprocity, the exposure would be, regard being paid to this circumstance, proportional to

$$\left[\frac{G(G+1)}{(G+1)F - Gf}\right]^2 \text{ or to } \left[\frac{G(G+1)}{(G+1)F - Gf}\right]^{2/p}$$

F and f designating respectively the foci of the lens and of the condenser (H. Bäckström, 1936).

[3] The following method will enable these trials to be shortened. Having projected the enlarged image on a sheet of white paper, a candle is brought gradually nearer to the paper until the contrast between two very different densities disappears. All other conditions

When the exposures best suited for the contact printing of two negatives of very different densities on identical sensitive papers are known, all operations being carried out under the same conditions, then the proportion of these two exposures will hold good in the case of enlargements of the same magnification in diffused light and under identical conditions (same light, same paper, same development).

The optimum exposure can also be ascertained, in the actual conditions of enlarging, by measuring the illumination of the shadows of the projected image with a luxmeter or any equivalent simplified device, or by means of a photo-electric exposure meter, provided that these instruments are calibrated by methodical trials for this special purpose.

771. The determination of the optimum exposure with daylight is more difficult owing to the frequent variations in the intensity of the light. It is best done by the use of two identical negatives, e.g. the halves of a stereo negative, but separate.

A strip of sensitive paper is exposed in the enlarger in sections, and the optimum time corresponding to the working conditions (character of the negative, sensitiveness of the paper, intensity of the light) is ascertained. At the same time a piece of print-out paper is exposed under the second negative in a printing frame facing in the same direction as the enlarger, and the time required to obtain a weak image, but with all detail, is noted. The proportion between the optimum exposure of the strip and the exposure of the print-out will always remain unaltered, whatever the negative used, provided that the working conditions are the same (same degree of enlargement, same lens aperture), and the same two papers are used. If two identical negatives are not available, the trials will have to be made successively with one negative, choosing the middle of the day in clear weather.

It is sometimes possible to adjust the aperture of the stop of the enlarger so that these two exposure times are the same. The time of exposure of the enlargement will then be equal to the printing time of a print-out paper with a similar negative.[1]

being the same, the time of exposure will be proportional to the square of the distance of the candle from the paper, the factor of proportionality being easily ascertained by a few preliminary experiments (F. C. Lambert, 1921).

[1] As a print-out paper it is possible to use a piece of the same paper used for the enlargement. It must previously be soaked in a dim light for 3 minutes in a 5 per cent solution of potassium nitrite, and then put to dry in darkness without rinsing (about $3\frac{1}{2}$ oz. of bath must be used for three sheets of half-plate size). This gives the advantage of a print-out paper the sensitiveness of which is practically proportional to that of the paper used for the enlargement (L. Lobel, 1912). Using bromide paper, the time required to get a print of *normal intensity* from the check-negative is equal to the optimum exposure for an enlargement of three times with the lens stopped down to $F/32$.

772. Exposure. Everything having been arranged, the light from the enlarger is cut off by capping the lens so as to permit of the sensitive paper being placed in position. Usually a cap fitted with an orange or red glass is used, as this permits of the image being seen and of the paper being placed correctly in position. The lens is then uncapped for the time found necessary for exposure. It is then re-capped to allow of the removal of the paper.

If the negative has not been provided with a mask, cutting off all the parts not required in the enlargement, it is necessary to make sure, before putting the paper in position, that no light object is in the path of the beam in such a position as to reflect or diffuse light on to the sensitive paper.

For enlargements by daylight the apparatus must be pointed towards the sky, care being taken that external objects (projecting cornices, trees, adjoining buildings) do not come in the field of view.

In the use of daylight enlargers or of triple-body cameras, the sensitive paper is placed in position by means of a dark slide, and the exposure is made by hand with a shutter. Some cheap patterns are not fitted with a shutter, the exposure being made with a piece of cardboard covering the negative carrier.

773. Control During Exposure. In all cases where the image is projected on to sensitive paper exposed uncovered in the dark-room, it is easy to modify the tones of the various parts of the image (particularly when a long exposure is given) by masking the parts to be lightened for a suitable fraction of the exposure. The mask used must always be held fairly well away from the sensitive paper, so as to project on it only a softly vignetted outline, and it must be kept in constant movement to soften the edges of the cast shadow still further.

For instance, to bring out the gradation of the sky in a landscape negative, a piece of card is used, cut either with a straight edge or according to the outline pencilled on it (before the sensitive paper has been placed on the easel)

while it is held about half-way between the lens and the sensitive paper. This card is moved, during part of the exposure, to and fro or up and down.

To lighten the face of a model dressed in white, or any other part surrounded by areas of which the exposure requires to be longer, a piece of black paper or thin card, cut to the suitable outline, is fixed by means of a strip of gummed paper to a loop of thin wire extended so as to form a handle, and is held during part of the exposure so as to shield the part to be lightened. If the wire is sufficiently thin and is held far enough from the sensitive paper, no trace of the handle will appear in the image.

Finally, to darken a portion of the image completely surrounded by areas of which the exposure has to be lessened, a card is used of size large enough to cover the whole of the sensitive paper and in which an aperture of suitable shape has been cut.[1]

774. Excessive contrast in an image can be weakened during enlargement by the following method (O. Mente, 1910): Before putting the paper on the easel (which latter may be covered with a waterproof fabric) the paper is soaked in a developer, without tendency to give either aerial fog or coloured products of oxidation (a solution of glycin with little sulphite is well suited for this purpose) and thickened by adding some glycerine, glucose, or sugar. After a very short exposure,[2] serving to print only the deepest shadows, the lens is covered with its orange cap and the shadows are allowed to develop. The silver deposit thus obtained very effectively protects the underlying emulsion against the action of light during the final exposure. From time to time a sponge, dipped in the developer and then squeezed, is passed over the surface of the enlargement. According to the effect desired, the exposure may be divided into a variable number of periods, allowing the developer on each occasion the necessary time to develop the exposed silver bromide.

775. A very ingenious method for indirectly retouching enlargements has been suggested by C. Duvivier (1924), who got the idea from a method of drawing from a photograph previously described by L. Misonne.[1] A sheet of white paper is fixed on the easel and a sheet of translucent paper is placed over it in such a manner that a sheet of sensitive paper may be slipped between them without shifting the tracing paper. Using the projected image as a guide, the tracing paper is covered with pencil work or black chalk worked with the stump in all those areas requiring lightening or masking. After completing this retouching, the sensitive paper is inserted and the exposure is made, the normal exposure being increased to compensate for the absorption of some of the light by the tracing paper. This method is particularly advantageous when several enlargements have to be made from one negative, part of the retouching being thus done once for all.

776. **Enlarged Paper Negatives: Equalization of the Grain.** Various methods have been suggested to reduce the grain of the base in enlarged paper negatives. One of the best (Delacre, 1925) consists in exposing the back of the paper (before or after the actual exposure is made on the emulsion side) uniformly, so as to produce a slight fog, compensating for the differences in transparency in various points of the paper. Some tests on cuttings from the paper to be used will show what is the correct exposure for obtaining equality in a paper on which there is no image. Seen by reflected light, such a paper negative appears mottled because there is a dark spot which corresponds to each weak place in the paper base, but if the auxiliary fog is of correct density no trace of any structure appears when the image is examined by transmitted light (the control is more easily done if the image is examined through the paper).

777. **Handling of Enlargements of Large Size.** When making enlargements of size greater than that of the largest dishes available, it is practicable to fold the sheet in two if its smaller side does not exceed the longer side of the dish. Otherwise, the print may be laid horizontally

[1] To reduce somewhat the sharpness of certain parts of the image, a sheet of flawless glass may be placed 4 to 6 in. in front of the easel and parallel to its plane. After the adjustments have been made, pure glycerine is brushed on to the glass opposite the areas to be softened, the shadow of the brush on the image being used as a guide (L. Mendick, 1922).

[2] It must be borne in mind that the sensitivity of the paper is lowered by wetting with the developer. Owing to the rather long time taken for complete development it is necessary to choose a paper without tendency to fog or stain yellow during prolonged development.

[1] This method, called by its author "the extreme limit," consists in projecting the enlarged image of a negative on to a sheet of drawing paper in the dark-room. It may then be worked over with pencil or charcoal, so that this added drawing and projected image together form a uniform dark grey. This, however, would give a servile copy of the image; it is easy during the work (in which placing is assured photographically) to carry out any modification or simplification dictated by the artistic ideas of the draughtsman.

on a boarded or tiled floor, or hung up vertically and covered with developer by means of a brush of soft hairs or by means of a hand atomizer as used by florists. In any case, the print must first be wetted with clean water so as to facilitate the uniform spreading of the developer, and the developing solution must be one of those without tendency to aerial fog or yellow stain (glycin solution with little sulphite). If the print is hung vertically, the developer must be thickened with glycerine, glucose, or sugar. Development must be stopped with an acid bath, and fixing must be prolonged so as to ensure the solution of all the silver salts. Washing is best done with a stream of water directed alternately to one side and the other. If necessary, all the work could be done in the open air at night, the illumination being afforded by an enlarging lantern the negative carrier of which has been fitted with a yellow glass or non-actinic yellow filter.

CHAPTER XLVII

LANTERN WORK

778. Introductory Note. The modern projection lantern is the result of the development by successive stages of the old "magic lantern" supposed to have been used by the priests of Ancient Egypt, and of which a description was given in 1461 by C. Milliet de Chales. The improvement of optical arrangements, the discovery of powerful sources of light, and then the use of photographic methods (Langenheim, Dubosq, 1851) for producing lantern slides (previously made by painting on glass)—all these steps extended considerably the scope of the projection lantern. Its employment in scientific teaching is due to D. Brewster and to the Abbé Moigno (1872) among others. It has now become the indispensable adjunct of nearly all branches of teaching.

(*a*) Lantern Slides

779. Standard Sizes of Lantern Slides. The dimensions recommended for lantern slides by the International Congress of Photography (Paris, 1889) have been generally adopted in all Continental countries. Great Britain and the United States have special sizes. The sizes shown in the table below and in Figs. 195 to 197 are the maximum dimensions of a bound slide. The actual dimensions of the glasses are about 1 mm. (1/25th in.) less. The sizes of the useful portion of the image (opening in the mask) are obviously optional, the values given being about their maximum limits. The size of the useful portion of the American slide is that of the "still" picture used in cinema theatres.

Nominal Outside Dimensions

Continental Europe	(Fig. 195)	85 × 100 mm. (3·35 × 3·95 ins.
Great Britain	(Fig. 196)	3¼ × 3¼ in. (82·5 × 82·5 mm.)
United States	(Fig. 197)	3¼ × 4 in. (82·5 × 101· mm.)

In principle, the two rectangular sizes must always be used as shown in the figures, the horizontal lines of the subject being parallel to the longer side of the plate.

A good deal of latitude has been introduced in the standardization of lantern-slide sizes since colour plates with a multicolour screen have come into general use. These plates afford direct positives which it is rather difficult to duplicate, so that, for showing them, all the usual hand-camera sizes, up to 9 × 12 cm. ($3\frac{1}{2} \times 4\frac{3}{4}$ in.) inclusive, have been admitted, and many recent projection apparatus allow images of 9 × 12 cm. size being projected, and are fitted with carriers taking the pictures either vertically or horizontally. On the other hand, to permit of the projection of slides made from stereoscopic negatives, special carriers have been made which allow one half of a stereo slide to be shown. We cannot, however, too strongly advise the photographer wishful of showing his slides anywhere without difficulty to adopt the most generally-used size. Otherwise he may be compelled to take with him not only his slides, but also all or part of the appropriate projection apparatus.

780. Photographic Lantern Slides. Lantern slides are usually made on special plates yielding images of black tone (§§ 567–569) or of warm tone (§§ 574–578), with the facility of toning or dyeing (§§ 595–606). They are sometimes also made by various pigment processes (§§ 655 and 674 to 678).[1]

It is advantageous to vary the colour of the slides of a set, so as to avoid monotony, but it is necessary to avoid too vivid colours in striking contrast with the average colour of the subject.

When diagrams,[2] charts, or numerical tables are shown in alternation with views, etc., in tone, the excessive brightness of these subjects, with extensive areas of white, is so dazzling as to prevent the next views from being seen satisfactorily. Such alternations of semi-darkness and light may be fatiguing. To prevent this, it is often preferred to project the negative,[3] instead of a positive, of the line subject. Such negative must not be too dense. In order that the rod,[4] with which the lecturer points out

[1] Mention may be made of the views for projection sold as transfers to be placed on glass, or as photomechanical prints on transparent films mounted in a cardboard frame or between glasses.

[2] After adjustment to the scale desired, the thickness of the lines must be between 0·3 mm. (curves) and 0·05 mm. (lines of the squared ruling); the lettering, in strokes of uniform thickness (0·15 to 0·10 mm.), must be 1·5 to 1 mm. high.

[3] It is for this same reason that the titles of cinema films are nearly always shown with white (or light-coloured) lettering on a black (or dark coloured) ground.

[4] It has been suggested that this rod, which resembles the mahlstick used by painters, should be replaced by

details on the screen, may be visible, it is advisable that such negatives be toned to a warm colour.

For the printing of lantern slides by contact there are various types of special printing frames allowing the printing aperture to be centred over one part or another of a larger negative. There are also available commercially reduhere cameras (similar in construction to box-foon enlargers) for copying by daylight on a redurm scale from large negatives. Reduction from negatives of very large size (such as X-ray plates) is usually done in a triple-body camera with an arrangement for illuminating the negative with diffused light.

While, with some practice, it is usually possible to judge satisfactorily the colour and contrast of a lantern slide by holding it at an angle of 45° in front of a white background which is uniformly illuminated (care being taken to avoid reflection of light from the image), it is always well to test the slides by passing them through the lantern in the normal manner. This precaution is specially necessary in the case of slides which have been toned to another colour than black; while they may appear perfect when viewed direct, they may sometimes cause an unpleasant surprise when projected.

The stronger the source of light, the more contrasty the slide must be. Lantern work in the family circle or before a small audience with lights of low intensity calls for comparatively soft slides, which would seem somewhat flat if shown in a large hall with the customary high power illuminants.[1]

a small projector held in the lecturer's hand which throws on the desired point on the screen the image of a small bright arrow. This very expensive accessory is not easily managed.

[1] The contrast of the projected image is decreased, on the one hand, by reflections in the optical system of the projector (§ 57) and, on the other hand, by the light scattered by the walls of the room and by the dust or smoke suspended in the air.

781. Diagram and Notice Slides. To save time, a notice or simple drawing may be made direct on the slide without the aid of photography.

The notices can be written or typed on thin paper, gelatine, or Cellophane, inserted between two sheets of "carbon paper" as used for obtaining carbon copies. In this way two identical impressions are obtained, one on each side, and these reinforce each other.

The writing or drawing may also be done with Indian ink on first-class tracing paper, or with pencil on ground glass; or, again, it may be done by scratching with a stylus on a glass previously prepared by coating with one of the varnishes used by copperplate etchers.

The slide may also be made by writing with copying pencil on smooth paper. This is then applied for 15–20 seconds to a glass covered with gelatine (e.g. a fixed photographic plate, which must have been washed and dried). This is dipped in water and blotted with a non-fluffy blotting paper when about to take the impression. The progress of the operation is followed through the glass. The lines pass from grey to violet in penetrating the gelatine. They do not transfer to gelatine which is too dry, and they spread if it is too wet. By using a gelatine tinted pale green, excessive brightness on the screen is avoided, and at the same time the contrast of the violet is slightly increased (A. Odencrants, 1920).

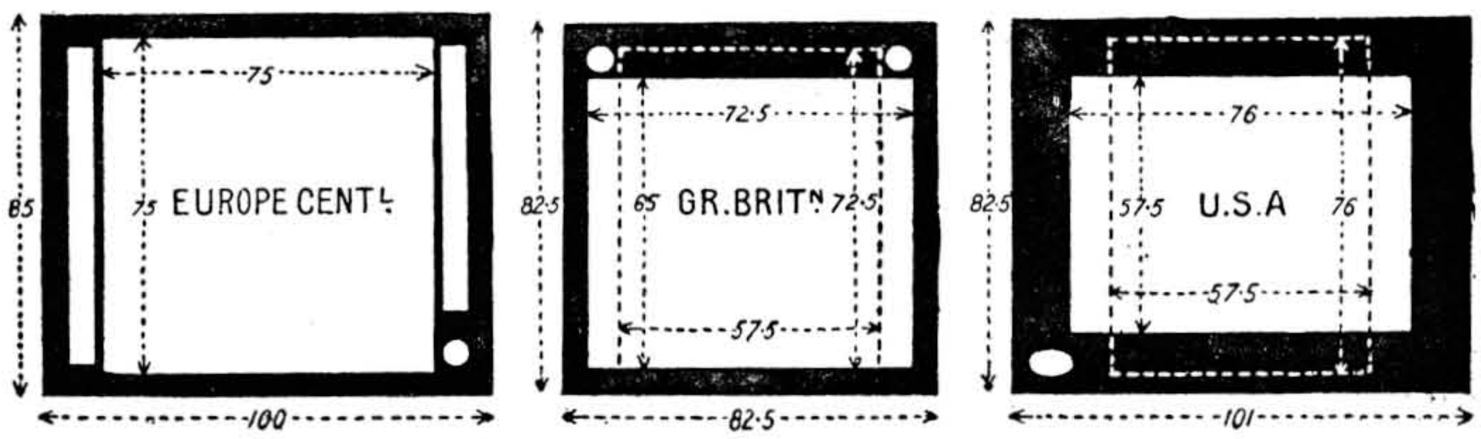

FIG. 195 FIG. 196 FIG. 197

STANDARD SIZES OF LANTERN SLIDES

782. Binding Lantern Slides. The dewing which appears on a slide during projection, and the melting of the gelatine of a slide kept for some time in the lantern, are often due to an excess of moisture retained in the gelatine or in masks and labels which have not been sufficiently dried before the slide was bound up.

Varnishing lantern slides (§ 477), after drying by heat and then cooling, is a very useful means of preventing any re-absorption of moisture by the gelatine. Failing this, it is at

least necessary to dry the slides, fitted with their masks and labels, before binding them up.

A judicious limitation of the picture is quite as necessary with lantern slides as with paper prints; it can only be effected at this stage by applying a mask to the slide.[1] Just as prints from various negatives are trimmed to different shapes and sizes, so it is not possible to get the best effect from slides if one is limited to the few masks available commercially. Among these masks those with fancy openings are to be avoided, and discretion must be used in employing circular or oval openings, which are, however, sometimes valuable to conceal a marginal defect in a slide.

The best method is to have a quantity of gummed strips of opaque paper of various widths ranging from $\frac{1}{4}$ in. to $\frac{3}{4}$ in. These can be stuck to the emulsion surface of the slide, encroaching very slightly on marks previously made with a pencil.[2] For this it is necessary to choose as thin a paper as possible, so as not to add appreciably to the thickness of the glasses by the superposition of the strips. Paper projecting from the glasses must be cut only after the gum is dry.

Mistakes in the position of the pictures on the screen are unavoidable on the part of the lanternist unless some distinctive mark clearly shows the correct placing of the picture on each slide. The customary conventional signs are as follow—

Continental Europe	(Fig. 195)	A white spot at the lower right-hand corner.[3]
Great Britain	(Fig. 196)	Two white spots along the upper edge.
United States	(Fig. 197)	A white spot at the lower left-hand corner (or this spot may be replaced by a gummed red strip along the lower edge)

These marks must be placed on the mask before binding up with the cover-glass, so that the label may be protected as well as the picture. The white spots may be used for numbering the slides.

The free spaces available on one or other side of the mask (portions not covered by the binding strips) may be used for labels showing, for instance, the name of the owner on the right-hand side, and a brief description of the subject on the left. These labels must be sufficiently far from the spots to avoid all confusion. Papers of different colours may be used to label slides of different sets. Titles, etc., can also be written in white ink on the black paper.

The gummed strips and the labels having been thoroughly dried, the slide is bound-up with a thin cover-glass[1] of the same size in order to protect the image against scratches and finger-markings. As far as possible these glasses must not be thicker than $\frac{1}{16}$ in., and must be free from scratches, bubbles, etc., at least in that portion covering the image. The surface placed in contact with the slide must be perfectly clean and dry. After placing this glass on the slide, which has been dusted, and having seen that both glasses are practically the same size, the two are bound together with gummed strips.[2]

In binding, use may be made of either one single strip, about $\frac{1}{4}$ in. longer than the total length of the four sides of the slide, or four separate strips, one for each side. Experience has shown that the use of four short strips enables better results to be obtained more quickly. The one objection to this plan is that it does not ensure complete sealing of the corners. This is of little importance if the slides have been varnished.

With a sponge moisten the back and then the front of the strip laid flat on a table. Place the slide and cover-glass (held together) along the middle of the strip.[3] Raise the sides of the strip to ensure a sufficient adherence for an instant, and turn the slide over. Then pass the finger or a small pad along the edge in order to cause the gummed paper to stick to the edges of the two glasses, and then, starting from the middle of the side, press the sides of the strip

[1] If the mask is applied to the back of the slide or to the outside surface of the cover-glass, its image will not be projected sharply at the same time as that of the subject—with very unpleasant effect.

[2] At least $\frac{1}{6}$ in. must be left between the edge of the picture and the edge of the glass; otherwise the grooves of the carrier will obtrude on the mask, and the binding strips will have to be so narrow that they will not secure the cover-glass satisfactorily.

[3] The indications of position refer to the subject seen as it is desired to appear on the screen.

[1] The various methods for cleaning off old negatives are described in § 487. New glasses must be washed in a warm solution of soda carbonate, rinsed, wiped, and dried.

[2] It is also possible to use strips of dry-mounting tissue (§ 711), which are affixed by means of a special tongs the jaws of which are heated to a suitable temperature.

[3] When a slide of dimensions smaller than the normal is being mounted, strips of card or glass of the thickness of the slide are laid on, so as to fill up the space on either side.

against the glasses by rubbing between the thumb and forefinger. Finally, rub towards the centre of the slide so as to stretch the gummed paper.[1] Any paper projecting at the two ends is then cut off after another strip has been fixed.

Slides belonging to different sets may be distinguished by binding strips of different colours.

783. Storing and Carrying Lantern Slides. Lantern slides are best kept in the plate boxes (usually 8 bound slides can be put in a box, in which 12 plates are sold) with the same precautions as prescribed for negatives (§ 490).

For carrying the slides by hand, several types of boxes are used. One of the best has no grooves but has a false bottom fitted with springs. The plates are arranged on edge, separated into batches by movable partitions. The lid is either hinged or completely detachable; in the latter case it is secured by hinged brass catches. This lid contains two thick bands of rubber which press the slides against the false bottom and thus prevent all movement. The handle is a stout leather strap, completely enveloping the box, and is kept from slipping by metal saddles. Any vacant space inside the box must be packed with corrugated cardboard or balls of crumpled paper. Grooved boxes are to be avoided—they are too cumbersome—and boxes with metal handles should not be chosen, since such handles cut the fingers and are not always strong enough to stand heavy weights. (We have seen boxes supplied for a hundred slides, i.e. a weight of over 13 lb., the handles of which were fastened with quite short nails, with the heads cut through in imitation of screws!)

No attempt must be made to lift a block of slides out of a box when these slides are standing on edge. If the block is pressed very tightly the slides at either end are almost sure to be broken by the excessive pressure. On the other hand, if the pressure is less, the slides are insufficiently held, and slip and fall. First of all, place the box on end so that the slides are flat. It is then possible to take out small batches without any risk of breakage.

For sending lantern slides by post, the best method is to put them in plate boxes (of lantern-plate size) in tight packets. The boxes are secured with wide rubber bands, and are put in a strong wooden box with a screwed lid and thick packing of corrugated cardboard or felt surrounding the various boxes.[1]

(*b*) Projection Lanterns

784. Parts of the Lantern. A projection lantern[2] consists essentially of a light-source of high power enclosed in the lantern proper or light-box, a condenser, a slide carrier, enabling the slides to be changed rapidly, and a lens. The lantern is usually placed on a stand, bringing the lens opposite the centre of the screen, the stand being fitted with a shelf for the slides before and after projection. The table and shelf should be edged with strips of wood so as to form trays, in order to prevent slides and accessories from falling off accidentally, as may easily happen when working in almost total darkness.[3]

In addition to these normal parts, projection lanterns fitted with very powerful light-sources are equipped with cooling devices similar to those required in cinematograph projectors. Some lanterns, too, are fitted with tinting discs, usually held in front of the lens on an eccentric axis, and permitting of filters of coloured glass or gelatine being placed in the beam issuing from the lens.

A certain number of stereoscope-viewing

[1] Various appliances may be bought for facilitating the binding of slides, e.g. clamps (mounted on a base), which grip the slide and cover-glass together at the centre and permit of the two being turned round; or boards with grooves lined with felt into which the glasses are pushed, after the binding has been temporarily attached, so as to stretch the paper and cause it to adhere to the glass. In order to ensure the uniformity of the edges of the binding strip the gauges supplied for passe partout mounting may be used (§ 732).

[1] The following method is adopted by the Musée Pédagogique de Paris (supply service for public instruction centres in France): The slides are packed in sets of 25 in a very long, wide band of soft, thick flannel in which they are tightly rolled. The rolls are placed in a strong wooden box with thick felt padding and closed by a sliding lid held in place by one single screw with a slot wide enough to enable a coin to be used for unscrewing. The percentages of breakages during the outward and return journeys are very small, but it must be remembered that these parcels are sent by post and do not, therefore, undergo the rough handling meted out by the railways.

[2] In the United States, projection lanterns are sometimes known as *Stereopticons*, which non-specialist translators have sometimes erroneously associated with the idea of stereoscopy.

[3] Folding tables, of which several patterns in wood or metal are obtainable commercially, are also used, or even a photographic tripod suitably wedged on a table (or several tables placed side by side to form a platform for the lanternist). Sometimes, too, legs are adaptable to the case in which the lantern is carried. One of the sides is held up by folding brackets so as to form a shelf level with the top and, at the same time, to give free access to the interior of the case.

cabinets (§ 827) can, by the addition of a simplified light-box and condenser, be used as projectors. In order to obviate having to reverse the views, one of the oculars is replaced by a lens between the glasses of which a prism for the reversal of the image is fitted.

Instruments for projecting the images of opaque bodies will be dealt with later.

785. The Light-box. The reader will find in the catalogues of makers and suppliers of projection instruments more complete descriptions than can be given here of the numerous models of projection lanterns. Some resemble enlarging lanterns, but with more ample ventilation, permitting the use of more powerful light-sources and not requiring such careful light-trapping, since any escape of light is of small account, particularly when the lantern is placed behind the spectators.

Within the limits of the money which can be spent, it is best to choose lanterns the light-boxes of which are of very large size, as this gives great latitude in the choice of the illuminant. It is also advisable that the condenser be capable of insertion and removal from the side without having to take out the lamp, and that the spring platen under which the carrier slides should allow the use of other carriers than the one supplied with the lantern. Finally, the lens board must be capable of being moved out to a sufficient distance from the slide carrier to permit lenses of considerable focal length being employed. Such lenses are necessary in long halls unless the lantern is placed among the audience—an inconvenient arrangement for both spectators and lanternist.

Lanterns of simple construction are usually fitted with condensers of 4 in. diameter, which, however, allows a slide area of only $2\frac{3}{4} \times 2\frac{3}{4}$ in. being projected.[1] It is well to choose a lantern with condensers of $4\frac{1}{2}$ in. diameter, which permits of slides $3\frac{1}{8} \times 3\frac{1}{8}$ in. or $2\frac{1}{2} \times 3\frac{1}{2}$ in. being shown. Better still, if the cost is not prohibitive, is the choice of a lantern with a condenser of 6 or $6\frac{1}{2}$ in. diameter, allowing of the projection of transparencies of size $3\frac{1}{2} \times 4\frac{3}{4}$ in. on the special plates for direct colour photography.

For lantern work in very large halls where it is not always possible to place the lantern at mid-height of the screen, it is very desirable to have lanterns in which the various parts can be de-centred. This avoids the necessity of tilting the lantern, such angling of the optical axis causing a certain amount of distortion, unless the screen be also tilted so as to be at right angles to the axis of the projection lens. A brief reference may be made here to the almost obsolete double or bi-unial lanterns, consisting of two bodies, one above the other or side by side, and allowing of one picture being gradually "melted" into another (dissolving views). This was done by a pair of linked shutters or mechanism for turning on the light in one lantern whilst that in the other was turned off.

786. Light Sources. The first projections of photographic slides were lighted by Argand lamps for melted tallow, adapted for this use by F. Newton (1851). Paraffin (kerosene) lamps with flat wicks (Marcey, 1874) then came into general use. These in turn were replaced by incandescent mantles (Auer von Welsbach, 1885), burning with coal gas or vapours of various liquid fuels (alcohol, petrol, paraffin). Meanwhile limelight had been used for high-power projectors (R. Hare, 1801; T. Drummond, 1826), and also the arc-lamp invented by Davy in 1809 but not used on any scale until about 1877. Various improvements to the limelight jet enabled the coal gas to be replaced by certain vapours (ether, petrol); acetylene was for a time also used as a projection light, with special burners. At the present time, wherever electric current is available, only arc lamps or incandescent lamps are used, according to the power required. Numerous patterns of both kinds of lamps have been designed specially for projection.

As the optical conditions are the same as in enlarging with directed light (§ 757), the intrinsic brightness of the light has a much greater effect on the illumination of the projected image than its luminous intensity.

787. Paraffin Oil Lamps with Multiple Wicks. Though these lamps are now scarcely ever used, it may be well to describe briefly the method of use. The wicks are about 2 in. wide, and usually there are four of them placed parallel to the optical axis. Over them there is a combustion chamber, closed in front and behind by thin plates of tempered glass, and forming part of a high, telescopic chimney. Essential conditions for satisfactory working are absolute cleanliness of the lamp and the correct trimming of the wicks, the corners of which must be trimmed off. The lamp having been filled with oil, turn up the wicks slightly and light them. As the heat

[1] It is for this reason that slides supplied by lantern slide publishers are usually fitted with masks with rounded corners, so as to include the whole view in the circle illuminated by the condenser.

gradually develops, raise the wicks until the flames merge into one very bright and non-sooty flame. This starting of the lamp requires about 10 minutes. The flame must be watched from time to time by the sight-hole in the combustion chamber, as it produces dense smoke if it draws too high. The lamp must be emptied and cleaned after each time of use; the carbonized portions of the wicks must be trimmed off exactly level with the burners; and the chimney must be cleaned. The light can be improved by dissolving a little naphthalene in the paraffin, but the lamp then heats much more.

788. Lamps with Incandescent Mantles. Ordinary incandescent gas burners do not usually give a sufficiently bright light for satisfactory projection. There are, however, various types functioning with the vapours of alcohol, petrol, or paraffin. They produce these vapours under pressure, thus producing a much brighter light. In using these lamps, some of which are very noisy in operation, the maker's instructions must be very carefully followed, as a mistake in manipulation may easily lead to an accident.

After having been once used, mantles, as a rule, cannot be carried from one place to another, unless, after cooling, they are dipped in 1 per cent collodion and then allowed to dry. Such a collodion-treated mantle must be burned off before use, just like a new mantle.

789. Acetylene Burners. Acetylene lamps formed of small horizontal rows of three burners, placed at about 45° to the optical axis, enable slides to be shown satisfactorily before audiences of about fifty people.

As portable generators are often dangerous in manipulation, cylinders of dissolved acetylene[1] are to be preferred to them.

790. Oxy-acetylene Limelight.[2] A pastille of rare earths[3] held in the flame of an oxy-acetylene jet becomes incandescent. Its intrinsic brightness is considerable as well as its luminous intensity. This is the most powerful light available if there is not electric supply of wattage sufficient for an arc, but it calls for considerable care in use, and for this reason a detailed description of its manipulation is given.

The axial tube of the jet is connected to the regulator valve of the oxygen cylinder[1] (§ 791), and the side tube is connected to the regulator valve of the acetylene cylinder. The pastille is fixed in the clips of the holder so that one of its flat surfaces projects about $\frac{3}{8}$ in. beyond the spring belt. The pastille is then pushed aside, the acetylene tap is opened, the burner is lighted, and the flame is regulated to a length of $\frac{5}{8}$ in. The oxygen tap is now slowly opened until the little blue cone of the oxy-acetylene flame measures about $\frac{1}{8}$ in. The pastille is then brought back into the flame, and the blowpipe and pastille holder are adjusted so that the tip of the blowpipe is about $\frac{1}{8}$ in. from the pastille, opposite the lower third of its vertical diameter. In this position the pastille is at its maximum brightness.

If the blowpipe sizzles or crackles it is a sign that the supply of acetylene is insufficient. Too much acetylene may produce a deposit of soot on the pastille the brilliancy of which is then much reduced. A considerable excess of oxygen can produce a deposit of black copper oxide. In either case the pastille must be withdrawn and allowed to cool; it must then be scraped to renew the surface.

To extinguish the jet, first draw away the pastille, and then close successively the taps of the acetylene and oxygen.

791. Precautions to be Taken in the Manipulation of Oxygen Cylinders. Oxygen is supplied under a pressure of 1,700 lb. per sq. in., in

[1] Acetylene gas, which is very soluble in acetone, is supplied both for welding and for lighting motor-car headlights, in the form of a solution (at a pressure of 170 lb. per sq. in.) in acetone impregnating a porous substance contained in steel cylinders (Claude and Hesse, 1896). On no account must any attempt be made to re-charge a cylinder with gas from another one, as serious accidents have attended such transfers made outside the special factories.

[2] The use of the oxy-hydrogen jet (for use with coal gas) is not described here, as it differs little from that of the oxy-acetylene jet. For the manipulation of the saturators for ether, acetone, or petrol, the instructions issued by the makers must be strictly followed.

[3] These pastilles or cylinders contain the same oxides as used to impregnate incandescent mantles (oxides of zirconium and of thorium) and have the advantage over the lime cylinders previously used that they give more light and can be used several times.

[1] The oxygen can also be prepared in a generator similar to those used for generating acetylene gas, by the action of water on a preparation of sodium peroxide (oxylithe, G. F. Jaubert, 1900) or in a steel cylinder, tested to a pressure of 850 lb. per sq. in., and fitted with a loading aperture closed like the cover of an autoclave. In this cylinder the oxygen is produced by the combustion of a preparation of potassium chlorate, infusorial earth, with a little charcoal (oxygénite, 1903), which mixture is placed in the cylinder after lighting one end. The oxygen produced in this second case is impure, and cannot be used for medical purposes. The instructions issued by the makers must be carefully followed, and in the case of oxygenators under high pressure the rules given below must be observed.

cylinders of forged steel.[1] In order to ensure regular supply of the gas at a pressure slightly greater than that of the atmosphere, the cylinder is fitted with a regulator valve, shown in section (Fig. 198). When the metal diaphragm of this valve is subjected to a pressure greater than that fixed by the regulator, the passage between the gas tube and the pressure reduction chamber is automatically closed until the pressure has fallen below the desired point.

Serious and sometimes fatal accidents can be caused by the presence in the joints of organic matter (leather, rubber, fatty matter, etc.), which may ignite spontaneously and cause the *cylinder to explode.*

Before fitting a regulator valve to a loaded cylinder, the tap of the latter must be slightly unscrewed to let a little oxygen escape, and it must then be closed without jamming too hard. Carefully clean by dry rubbing the outlet of the

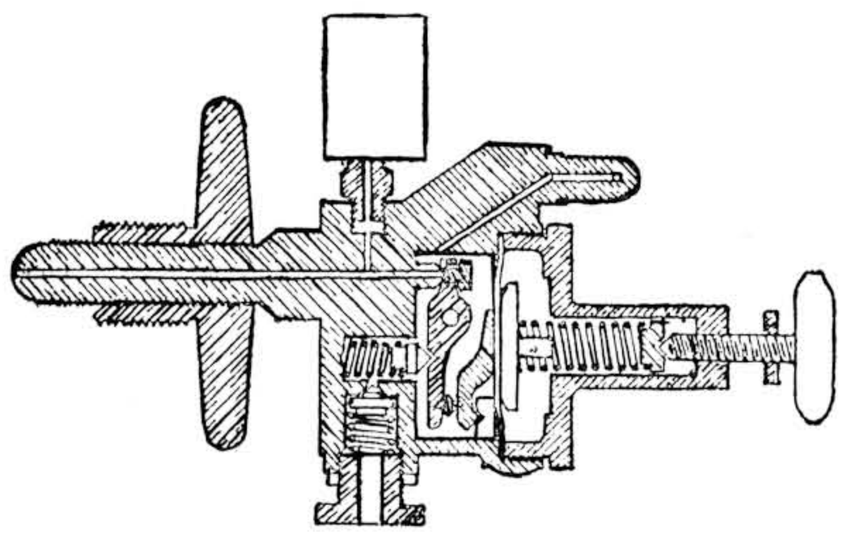

FIG. 198. REGULATOR FOR OXYGEN GAS CYLINDER

cylinder and the cup which forms the end of the threaded tube of the regulator valve, so as to remove any dust which may give rise to a leak at this joint. Place the nut of the valve into the connection on the tube and screw it half-way. Then screw the valve fully into the nut, tightening and loosening the latter so as to give the valve the desired position and then screw the nut home, using a special key if necessary.[2]

After fitting the valve, screw home the regulating screw (usually ending in a winged key) in the axis of the valve-box. Open fully, by unscrewing, the supply tap of the valve, and then slightly open the tap of the cylinder. As soon as the gas flows, adjust the pressure of the outflow (seen on one of the gauges, the other indicating the pressure of gas in the cylinder[1]) by turning the regulating screw, and then close the tap if the oxygen is not immediately required.

To stop the flow after using the lantern, first close the tap of the cylinder without jamming it, and let the gas escape from the pressure reduction chamber. When the needles of both gauges have returned to zero, close the supply tap. The needles of both gauges must remain at zero.

792. Electric Light. The incandescent lamps used in projection lanterns are the same as described for enlarging lanterns (§ 758), so that it will suffice here to deal with arc lamps.

To avoid misunderstanding, it is well to state here that arc lamps of the *mirror* type, the comparatively recent introduction of which marks an appreciable progress in cinematograph projection, cannot be used satisfactorily for the "still" projection of slides of the ordinary size.[2]

The efficiency of an arc in a projector depends on two factors: the intrinsic brightness of the crater (itself proportional to the square root of the *density of current,* quotient of the number of amperes by the area of the crater), and the useful area of the crater, measured in a plane perpendicular to the optical axis, which area is smaller as the carbon is more inclined on the axis. The brightness of the positive crater of an arc with ordinary carbons is about three times that of fused tungsten, which latter is obviously the maximum brightness of an incandescent lamp. The maximum brightness of the crater

[1] In France the transport of compressed gases is subject to the regulations issued by the Prefecture of Police (Paris, 25th May, 1902): The containers must have been stamped within three years by the Department of Mines; the valves and taps must be protected by covers screwed to the containers. Transport must be in covered vehicles with completely closed sides. The containers must never be violently thrown, nor exposed to the sun, nor to any source of heat. The carrier must be supplied with a pressure gauge and must understand its use.

[2] The sealing of the joint may be ensured if needful by diluted glycerine or soapy water. No fatty substance must be used.

[1] This gauge allows one to tell how much gas is left, since the pressure shown by it is in the same ratio to the initial pressure as the remaining volume of gas to the initial volume.

[2] In these lamps a concave mirror projects on the film an enlarged image of the positive crater, the carbons being arranged in line along the optical axis. This arrangement is quite suitable for projecting an image of very small size, but cannot be applied to the case of an image of comparatively large size. Also, these arcs cannot be used under the conditions in which other sources of light are used, since a dark shadow of the support of the positive carbon appears on the screen, unless a small de-centred part of the beam is used, which is what is done for the "still" projection sometimes employed with a cinematograph projector.

is determined by the temperature of volatilization of carbon. To increase the steadiness of the arc, it is usual to use carbons with a *core* of softer carbon occupying the position of the lead in a pencil, but as the carbon of the core is more volatile, the intrinsic brightness of the arc is lowered. This drawback is overcome by using carbons with a mineralized core (carbon paste mixed with the fluorides of various metals, such as calcium, barium, etc.). The arc is then steadier, longer, and provides the major part of the light (about 85 per cent), the remainder being supplied by the positive crater. Furthermore, the *flame arc* gives, according to the salts used in the mineralization, various coloured lights or white light,[1] and the consumption of current is considerably reduced.

The somewhat rapid consumption of the carbons in air (about 2 in. per hour on an average) renders necessary frequent regulation of the arc, especially as the positive carbon wears away at twice the rate of the negative carbon, unless its section is twice as great (diameters in the relation of 1 to 1·4).

The use of mineralized white-flame carbons is particularly advantageous in arc lamps fed with alternating current, as the arc then works more regularly and quietly. Also, as the arc is here the principal source of the light there is no trouble due to the periodic inversion of the current, which, with ordinary carbons, causes the two carbons to be alternately the sources of light, so that under good conditions only one alternance in two can be made use of.

793. Arcs with convergent carbons are generally used for projection work, the two carbons forming an angle of about 120° (60 on each side of the optical axis),[2] or, failing this, lamps in which the carbons in line at a slope of about 30° to the vertical are used.

In spite of numerous attempts to construct arcs with an automatic feed as used for street lighting, no simple and completely satisfactory pattern has yet been devised, but some do allow of much less attention on the part of the lanternist in the course of a lecture.

The regulation of the arc requires that it be examined very frequently. This examination must be made through sight-holes fitted with red or very dark smoked glass. With a fixed installation it is possible to avoid looking at the arc, the glare of which is more serious the more frequently it is experienced, by piercing in one of the sides of the lantern a very small hole which acts as a pin-hole (§ 38), and projects on the side of the projection cabin a greatly enlarged image of the arc and of the tips of the carbons. It is then an easy matter to trace on the wall (or on a sheet of card hung there if necessary) the normal position of the carbons, thus allowing the arc to be constantly watched (F. Dogilbert, 1914).

The lamp having been fitted with carbons of suitable diameter and of sufficient length to last for the required duration of the lecture, the set screws are fixed and the carbons are drawn apart until ready to start. After closing the circuit they are momentarily brought close to each other[1] to start the arc, and are then drawn apart to the distance which experience has shown to be suitable for the normal functioning of the arc. If it becomes necessary to touch the carbon holders or the carbons during the lecture, either pincers or thick folds of rag must be used.

794. To supply an arc with continuous current from mains requires that about 60 per cent of the energy be absorbed in resistances with current at a pressure of 110 volts; the loss amounts to 80 per cent with a current of 220 volts. In the case of an installation of large size, this difficulty can be got over by using the current to operate a motor and in turn a dynamo supplying current at about 50 volts, but such an outlay is justified only for continuous use.

With alternating current[2] it is possible to use a static transformer, receiving the current from the mains and supplying it at about 50 volts, or an induction coil can be used which introduces a de-phasage between the electro-motive force and the intensity such that the efficient voltage can be reduced to any required value

[1] Carbons mineralized to give a white light are generally marked with white paint on their cross sections.

[2] Lamps *with convergent carbons* are sometimes fitted (when mineralized carbons are not used) with a magnetic blower, a horse-shoe electro-magnet placed in series in the circuit of the arc which pushes back the arc, and consequently the crater, allowing of a better utilization of the emitted light. In the lamps in which the two carbons are in line, use is made of either this blower or of a semi-circular sheath of refractory material placed behind the arc. This sheath tends to move the crater in the opposite direction, and—with alternating current—it opposes the rotation of the arc (Marcou, 1905).

[1] In the case of lamps of high power, it is necessary to put into the circuit a fairly strong resistance before bringing the carbons together in order to avoid a momentary overload that would blow the fuses.

[2] Mains supplying three-phase current do not always permit of the use of a powerful arc lamp for two-phase. The current may be then converted in the same manner as stated for continuous current.

(except for a very short moment after closing the circuit). The efficiency of an induction coil is a little less than that of a transformer, but it costs very much less.

In all cases it is necessary to have a slight excess of voltage, to be absorbed in a rheostat of variable resistance, so as to ensure perfect regulation. Over-running of the arc can be of advantage when projecting a very dense slide, as is usually the case with dyed slides or with colour photographs on screen plates.

795. The Condenser. The condensers of projection lanterns are similar to those already described for use in enlarging lanterns. The precautions to be taken against overheating the condenser are all the more necessary, as the light-sources usually employed for projection work are very much more powerful than those used in enlarging.

In some cinema projectors, compound condensers (A. Koehler, 1915; L. Lenouvel, 1922) have been used. With these an auxiliary lens projects on the gate a sharp image of the rear surface of the condenser. Such devices are not of general importance in " still " projection.

796. Slide Carriers. Slide carriers of the usual type comprise a fixed frame which is slipped under the spring platen of the lantern stage and within which a light holder for two slides can be pushed to and fro. When one of the apertures in this holder is centred on the optical axis, the other aperture is outside the lantern stage, so that slides can be put in or taken out. Stops at each end limit the travel of the holder. To facilitate the removal of the slides, levers are usually fixed under each half of the frame, being raised on inclined planes when the respective aperture has emerged from the fixed frame. The slide is thus raised about $\frac{1}{4}$ in. in its grooves.

In some carriers, the openings of the go-and-return holder are fitted with adapters in which the slides are placed. In this way slides of various sizes, with the picture horizontal or vertical, can be shown by means of one carrier, provided a suitable assortment of adapters is available. There are also carriers with two pairs of apertures, one behind the other, e.g. for slides of the British and continental sizes. It is necessary to re-focus when using successively a front aperture and a rear one. There are also slide carriers in metal in which each of the holders is mounted on a revolving plate, so that the slide can be placed horizontally or vertically as may be required.[1]

[1] As there is no standard for the thickness of the carrier for lantern slides, it may happen that a lecturer taking with him his own special slide carrier may find it unusable with the lantern placed at his disposal. In any case it is well to take with one some slips of wood of the same thickness as the carrier in order to stop the light issuing above and beneath the carrier when the latter is used in a lantern intended for larger sizes.

Mention may also be made of the magazine carrier which the lecturer loads beforehand with slides placed in the order in which it is intended to show them, and which is actuated from a distance (G. Massiot, 1909). There are also numerous automatic devices (used for advertising) by which a picture is thrown on a screen.

797. Projection Lenses. The lenses generally used for projection work are of the Petzval type (§ 98 and Fig. 69), in rack mounts for focussing. Mounts are also used in which may be placed interchangeable tubes, each carrying a lens of different focal length.[1] (See § 807 for notes on the choice of the focal length for projections under given conditions.)

Owing to the light diffused by the lantern slide[2], the luminosity increases a little when use is successively made of lenses with a relative aperture increasingly larger beyond the size necessary to pass the beam of "directed" light, but the contrast of the image decreases.

The requirements of cinema projection and of projection of colour slides have led some makers to produce special lenses with the same relative aperture as the Petzval lens, but better corrected, especially as regards curvature of field.[3] In some of these lenses the distance from the focal plane to the pole of the rear glass is

[1] Allowing for losses of light due to dust suspended in the air (and sometimes to smoke) the illumination of the screen is independent of the distance between the screen and the lantern, subject, on the one hand, to the image being always projected of the same size, and, on the other hand, to the lens transmitting the whole of the light issuing from the condenser. This latter condition requires that the diameter of the lens is larger according as its focal length is longer, and this is unfortunately not the case with lenses interchangeable in one mount, the invariable diameter $1\frac{5}{8}$ in., $2\frac{1}{8}$ in., or $2\frac{1}{2}$ in. being that usually given to a lens of medium focal length.

[2] By masking the "directed" light by means of a suitably placed opaque patch, there will be seen on the screen a partly inverted image (illuminated only in the medium half-tones) formed by the diffused light, the effect being to some extent comparable to that obtained by observation in a microscope with dark ground illumination (H. Joachim, 1931).

[3] It has been suggested (Swift, 1894) that the field of very rapid lenses be flattened by placing in the fixed frame of the slide carrier a plano-concave lens the plane surface of which is as close as possible to the slide, this lens playing the part of the field corrector of Piazzi-Smith (footnote to § 51).

not more than half the focal length. The rear glass is thus quite close to the slide and can utilize the whole of the beam without the need of such a large diameter of lens.

For lanterns used in halls of very different sizes the use has been suggested of lenses constructed on the principle of variable-focus telephoto lenses (§ 108), in order to avoid the carriage of a series of lenses of different focal lengths (A. Brouquier, 1901). Such an arrangement also enables the size of the pictures to be changed during one and the same lecture, and thus to show on a magnified scale the details of a subject after showing it as a whole.

It is easy to improvize cheaply a projection lens of large aperture, but incompletely corrected, yet nevertheless quite suitable for projection in a hall of very large size where the spectators nearest to the screen are some yards away. To do this, two plano-convex lenses are assembled so as to form a very large "Ramsden ocular" (L. Lumière, 1924). To obtain a lens of focal length F, two identical plano-convex lenses of focal length $f = 1\frac{1}{3}F$ are obtained and mounted with their convex surfaces facing each other, at the ends of a tube (or box) of length equal to $8/9F$. It should be borne in mind that the nodal points of the whole lens are crossed, their separation being equal to $4/9F$.

For instance, two lenses of 56 in. focal length and 8 in. diameter, mounted at 37 in. from each other, will form a lens of 42 in. focal length working at $F/5{\cdot}3$.

Testing a projection lens is best done under normal conditions of use, employing as a test plate a thin plate of metal in which holes with clear-cut edges have been pierced.

798. Cooling Devices. Until recent years, overheating of the lantern slide (or of the preparation, in cases where anatomical or other sections are directly projected) was avoided by a water trough placed in front of the condenser. This trough, the sides of which are formed of glass, contains either pure water or certain salt solutions the efficiency of which has sometimes been over-stated.

Pure water certainly absorbs the infra-red rays of great wavelength, but not those near to the visible extreme red, and both kinds produce heat only. The absorption of the infra-red can be increased only by the addition to the water of a substance of selective absorption[1] which also absorbs some of the useful light. It is obviously necessary to select a salt of which a solution of useful strength does not transmit light of a very marked colour. For instance, in troughs of about 2 in. thickness a 10 per cent solution of ferrous sulphate may be used (C. E. K. Mees, 1912; this is very oxidizable in spite of the addition of a little sulphuric acid), or a 1·5 per cent solution of copper sulphate, which is perfectly stable, may be used (W. Crookes, 1921). It is best to use distilled water, or, failing this, water which has been boiled, to avoid the formation of lime deposits on the glass. The water trough may be connected to a tank at a higher level, so as to ensure a continuous circulation, thereby avoiding overheating, with the consequent risk of bubbles. The water in the trough may be cooled by a coil through which cold water circulates.

It has been suggested that the light-source (incandescent lamps) be immersed in a water trough (E. Borlandi, 1912) or to combine two water troughs with a slide carrier (P. Féron Vrau, 1921) for use alternately.

In cinema projectors it has been common practice for some years past to cool the film by blowing moist air against both its surfaces.

Glasses able to withstand considerable heating, and slightly tinted a greenish blue, absorb the greater part of the infra-red rays and absorb only a little light. They can therefore be used with advantage either separately or as the sides of water troughs. They can themselves be cooled by having air blown on to them.

799. Projection of Opaque Objects. "Episcopic" projection (by the light diffused by an opaque body) is of very low efficiency, since the lens collects only a very small fraction of the light scattered in all directions by the opaque object which it is desired to project. For this reason projectors for this purpose did not make their appearance until very powerful sources of light became available (in this case the total luminous intensity, and not the brightness, must be considered).

Various patterns have been worked out, ranging from toys intended for family use with picture postcards to the large educational instruments which permit the projection of the pages of an atlas or of objects in low relief (medals, botanical specimens, small animals being dissected,[1] etc.). Some of these instru-

[1] Alum, which is sometimes recommended, has no effect other than that of clarifying the water if it is dissolved before boiling. Glycerine also is very slightly effective except that it raises the boiling point of the water.

[1] Instruments have been constructed that enable all

ments (epidiascopes) serve both for episcopic projection and for transparency projection (diascopic projection).

The illumination is provided, direct or by reflection from mirrors, by an arc lamp or by powerful incandescent lamps. Condensers prevent an excessive dispersion of the light, and adjustment is then made so as to direct one or more parallel beams on to the original to be projected.

In the toy patterns and in the simplified episcopic projectors, the original is introduced in vertical grooves, or is placed behind an aperture in a vertical panel, the lens then projecting on the screen a picture which is reversed as regards left and right.[1] This fact prevents the reading of titles, graduations of charts, reference letters, etc. Preferable to these are the instruments in which the original or objects to be projected are placed on a horizontal table. The optical axis of the lens is then vertical, the emergent beam being then reflected in a horizontal direction by a reflector (mirror or prism) which turns the image the right way round and thereby ensures the picture being viewed correctly on an opaque screen.

(*c*) Lantern Screens

800. General Notes. Types and Efficiency of Screens. Pictures may be projected on an opaque screen, the lantern being on the same side of the screen as the spectators (projection by *reflection*), or on a translucent screen, the lantern being on one side of the screen and the spectators on the other (projection by *transparence*). The choice between these two methods usually turns on the nature of the premises. Where the slides are shown to assist a lecture, it is usually preferable for the lanternist to see the lecturer because he can then foresee his requirements, collaboration between the two being thereby better assured. Also, for an image projected by transparence to be satisfactorily seen it is necessary that the spectators should view it from a position not far from the projection axis, so that their number is smaller than when an opaque diffusing screen is used.

For a long time the only screens used were opaque ones with a matt surface. Since 1910 screens with semi-diffusing and semi-reflecting surfaces (metallized screens: J. Anderton, 1891; A. and L. Lumière, 1901, etc.) have also been used, a very much greater luminous efficiency being sometimes claimed for them. A sheet newly coated with magnesia throws back about 90 per cent of the light it receives, and a much higher efficiency is inconceivable. The essential difference between the matt screen and the metallized screen lies in the manner in which the light is distributed by the screen. A matt screen throws it back almost uniformly in all directions; a spectator viewing the screen at an angle almost grazing its surface sees it nearly as brightly lit as a spectator occupying a position opposite the centre of the picture. With a metallized screen, on the other hand, the major part of the light is sent back according to the laws of specular reflection; a spectator opposite the screen sees it very brightly, but as soon as a position away from the perpendicular to the screen-surface is taken, the brightness decreases, at first slowly and then with increasing rapidity, especially on that side of the screen which is farthest from the viewer. If a sheet of good-quality white blotting-paper be placed against the surface of a metallized screen by an assistant, the metallized surface will appear much brighter than the paper when one faces the screen, but the screen soon appears less bright than the latter as one moves to the side.

A metallized screen and a matt one are therefore not interchangeable. It cannot be said that one is brighter than the other. The former is better for use in a long, narrow hall of which the screen takes up nearly the whole width, whilst a matt-surfaced screen is better in a very wide hall in which the spectators in the front rows see the screen under considerable obliquity.

Between the above two extreme cases there are various intermediate types, usable within an angle of about 30 degrees on either side of the normal; screens with a rough metallic surface, metallized screens covered with a layer of small glass beads in contact, etc.

The screens in common use are of flat surface. Under the pretext of suggesting a sensation of relief or of rendering the illumination more uniform, screens of curved surface have frequently been advocated. The fact that the perception of relief in viewing an image projected on to a curved screen depends exclusively on auto-suggestion has been established by the very people who have devised such screens, for not only have they made claims for curves of

stages of a surgical operation to be shown in an amphitheatre adjoining the operating room, so as to avoid the presence around the surgeon of anyone except his assistants.

[1] A concave spherical mirror has been employed for projecting interference photographs (de Watteville, 1911).

the most diverse kinds, but the number of those advocating a concave surface is about equal to that of the advocates of a convex one. As regards more uniform illumination, it is no doubt correct that a screen formed of the concave portion of a cylinder with a vertical axis would be advantageous if the projection were made before a single spectator placed, as the lens of the lantern, on the axis of curvature of the cylinder, but this advantage disappears in the case of a spectator removed to any extent from this ideal position.

801. Opaque Diffusing Screens. A screen may be made on a wall by a coat of plaster (if necessary, hardened with fluosilicic acid, so as to render it washable) or by covering it with a washable matt white paint.

Usually, however, the screen needs to be of fabric mounted on a roller like a blind or stretched on a frame. This frame can be suspended from fixed pulleys by cords fitted with counterweights, or it may be one which can be taken to pieces[1] for occasional use or transport, in which case the frame is held up for use by a folding support or one that can be taken to pieces.

Although the screen has sometimes been made of American cloth, or oil-cloth, or similar coated fabrics which have the advantage of being easily washed, it is usually preferred to employ a white sheeting of close texture. Calico may be obtained up to 9 ft. width, and canvas without a join up to 24 ft. If larger than this, the screen is made of several widths, the joins being hidden by the coating. The coating to be applied (after the sheeting has been stretched on its frame in the case of a screen not intended to be removed therefrom) consists of a white, opaque material such as whitening mixed with glue, or, preferably, with the following (Molteni, 1894)—

Gum arabic . . .	1 oz. (50 grm.)
White magnesia (hydrocarbonate)	4 oz. (200 grm.)
Water, about	20 oz. (1000 c.c.)

A very small quantity of glycerine may be added to this mixture to render the coating somewhat more flexible when the sheet is rolled.

802. Metallized Screens. The first metallized screens were made by pasting silver paper on canvas. Subsequently such screens have been prepared by painting with aluminium, or by dusting aluminium on to a surface covered with an adhesive varnish. A metallized screen is efficient over a wider angle as its surface is less perfectly reflecting and of coarser structure (within the limits imposed by the necessity of avoiding visible granularity). For these reasons a metallized screen is sometimes sprayed over with a very thin coat of matt varnish or white paint. The suggestion has been made of producing, prior to metallization, a rough surface by coating the screen with an adhesive on which sand, crushed glass, or minute glass beads are spread. For the metallic coating, by dusting on, talc, magnesia, or even scales of boric acid, have been mixed with the aluminium powder.

On account of the marked differences in the diffusing properties of the various commercial types of metallized screens, an order for such a screen should be given only after making tests of samples, so as to judge whether the screens would be advantageous in the particular hall where it is proposed to use them, and which is most suitable among them. The various samples are placed on a sheet of fine quality white blotting boards. An image is thrown on the composite screen thus formed. Then the extreme degree of obliquity, for a given screen, may be taken as the angle between the line of sight and the projecting beam at which the luminosity of the screen just matches the luminosity of the white blotting card surrounding it (P. Ritter von Schrott, 1913).

As a coating use may be made of one of the aluminium paints or an aluminium cellulose varnish (preferably sprayed by an air-brush), or the following (L. Lobel, 1922):

In 20 oz. (1,000 c.c.) water, slightly warmed in a water-bath, mix—

Slaked lime	260 gr. (30 grm.)
Casein	300 gr. (35 grm.)
Sodium silicate . . .	90 gr. (10 grm.)

To this mixture add 175 gr. (20 grm.) of whitening, and 175 gr. (20 grm.) of impalpable aluminium powder.

For a permanent screen, excellent results have been obtained (C. W. Gamble, 1920) by using as a screen a sheet of glass not more than $\frac{1}{4}$ in. thick, its front surface being matted with a sand-blast, the back surface being silvered.

803. Translucent Screens. A screen for pro-

[1] In this case the sheet is edged with a wide hem in which there are brass eyelets (of the kind used on tarpaulins) at about 6-in. intervals. The sheet can then be stretched by a cord which passes through the eyelets and also round the frame; or opposite rods of the frame may be passed through each of the hems, one side of the frame serving as a roller on which the sheet is wrapped when not in use, so as to avoid creases.

jection by transparence may be a sheet of glass matted with a sand-blast, in the case of a fixed installation of large size, or a fine metal gauze or muslin, stretched on a frame and serving as a support for a translucent coating (gelatine, or cellulose varnish, holding in suspension a very finely-divided white substance such as alumina, barium sulphate, etc.).

An excellent screen is obtained by using tracing paper, or, better still, tracing cloth, supplied in rolls of various widths up to about 5 ft.

Plain (uncoated) calico may be used, but it must be wetted to increase its transparency. For this purpose a florist's syringe is generally used. To prevent the evaporation of the water during the lecture, which would entail respraying, the water should contain about 10 per cent of glycerine, or, cheaper, about 10 per cent of the very hygroscopic calcium chloride.

With too transparent a screen (ground glass, thin fabric tissues such as cambric or lawn, etc.) the projection lens is seen through the screen in the form of a bright spot which greatly interferes with the viewing of the picture. Also the angle within which the spectators may be placed is then very narrow.

804. Daylight Screens. Various arrangements enable pictures to be shown in full light on a translucent screen.

We must particularly mention the use, between the screen proper and the spectators, of a translucent curtain, either black or dark-coloured, so that no light other than that of the lantern reaches the screen except the light filtered by the curtain (Isnardou, 1911). It is also possible to employ screens of translucent plastic material of somewhat dark colour, e.g. greenish-grey), the rear surface of which (turned towards the lantern) is flat, whereas the surface turned to the spectators is ribbed (J. F. R. Trœger, 1913).[1] The screen is placed so that it receives only a little stray light on its rear surface, at least in the direction of the spectators.

(*d*) The Lantern Lecture

805. The Lecture Hall. When there is occasion to build or to adapt a hall for lantern work it is preferable to select a hall which is much longer than it is wide, thus enabling advantage to be taken of the metallized screens. It is obvious that the size of the screen must be in accordance with the length of the hall, but the first rows of the audience must, as far as possible, be far enough from the screen to prevent it being viewed at an angle of more than 50° (i.e. at a distance from the screen about equal to its width). If the floor of the hall is level, the lower edge of the screen must be at a greater height than is necessary with a hall built like an amphitheatre,[1] more especially so in a long hall. If the seats are fixed, they should be staggered from row to row, thus enabling each spectator to see the screen between the heads of the two people seated in front of him.

Unless it is quite impossible, the position of the lantern should be such that the optical axis of the lens cuts the screen in its centre; otherwise it is necessary to de-centre the lens on the lantern (§ 785).[2]

In many lantern halls the screen is surrounded by a wide matt-black border, the drawbacks of which outweigh the advantages. The ideal is to surround the screen with a grey tint illuminated so that its brightness is about 1/10th that of the high-lights of the projected image and three times that of its deepest shadows.[3]

806. The Illumination of the Hall. It is customary to put out all the lights while slides are being shown, except for some low-power lamps covered with coloured filters to indicate the exits. It is, however, possible to retain an illumination sufficiently bright to permit of note-taking after the eyes have become accustomed to it. For this purpose only indirect lighting from the walls and ceiling must be employed, the sources of light and their diffusers being hidden from the eye. A slightly yellow light (lamps with amber screens or dipped in amber-coloured varnish) is generally best. Except for the lantern screen, no surface exposed to the sight of the audience must have a brightness greater than 10 candle-metres (the desks of the orchestra, if there be one, must be shielded from view, since they must be much more

[1] We have seen satisfactory projection on such a screen in the open air in very fine weather.

[1] It is not necessary for the first rows to be raised in tiers; the steps need not begin until the fifteenth row. The average height of a step is 6 in. In every case it is necessary to make sure, by means of a section drawn to scale, that the arrangements will permit of every one having a clear view of the screen.

[2] It would be possible to make lantern slides purposely distorted (§ 746) so as to compensate for oblique projection, but it would involve many complications when making a large number of slides.

[3] When a double lantern is used, this border could be lit by the second lantern, in which a glass could be placed with an opaque mask in its centre, the mask being of approximately the same size as the useful portions of the slides (K. C. D. Hickman, 1925).

brightly lighted). The illumination of a horizontal surface at the level of the spectators may be as much as 1 candle-metre in the front rows, then gradually rising to 2 candle-metre in the back rows. These limits may be exceeded if the lantern screen is at the rear of a stage and is thus protected from the major portion of the light scattered by the ceiling and walls. The illumination of the entrance passages should be regulated so that the spectator is brought imperceptibly from the light outside to the dim light of the hall (L. A. Jones, 1920).

In the most usual case where the lighting of the hall is of either full brightness or practically nil, it is advisable that the switches[1] should be controlled by the lanternist, so as to ensure that the lights in the hall shall not be put out or dimmed except when the first picture is about to be shown.

[1] Where gas is the source of light, two taps should be fitted; one serves to turn all the general lights down to a by-pass, and is used only at the beginning and end of the show, while the other serves, by fully opening or shutting, to turn the full intensity of the light on or off.

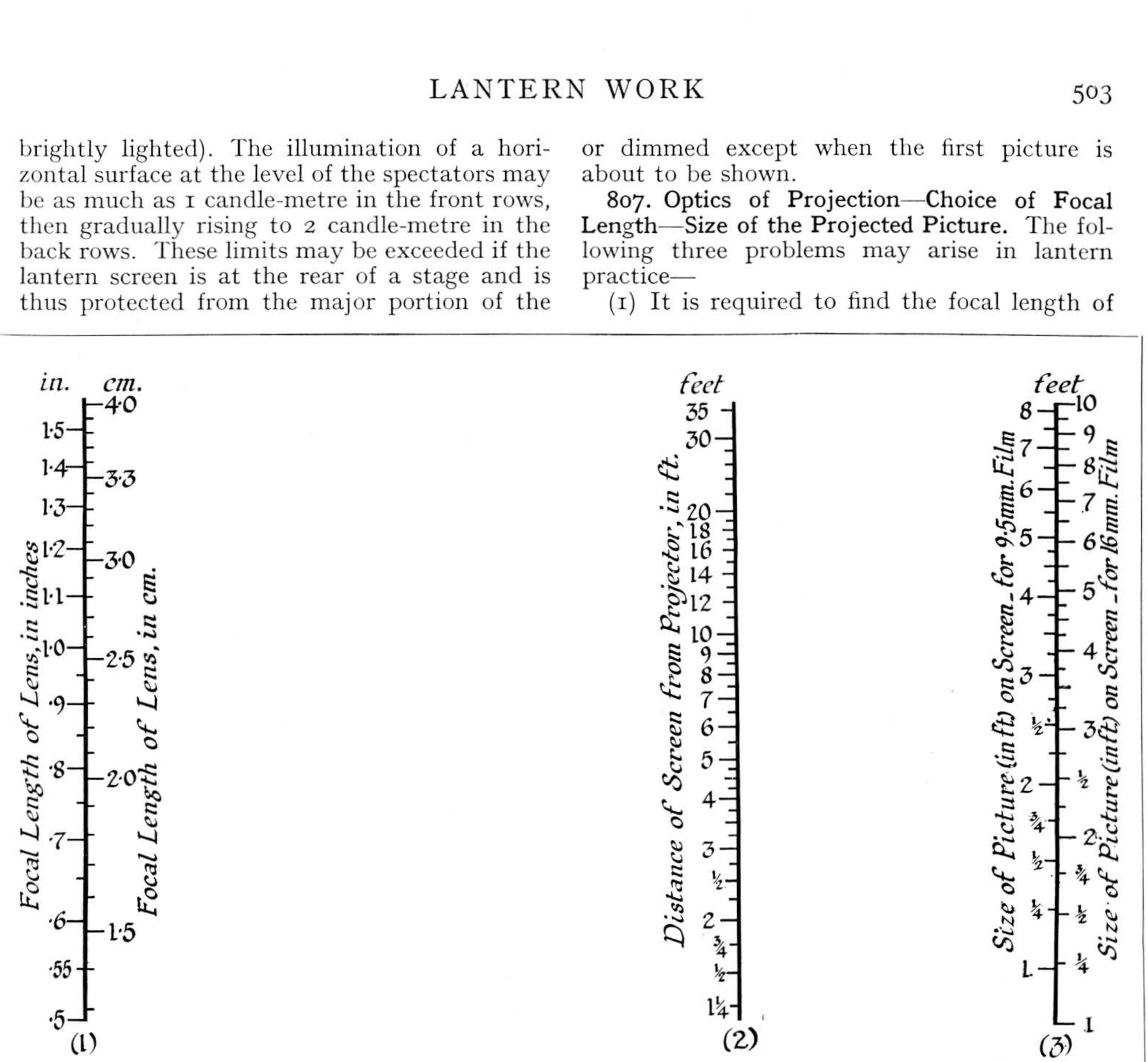

FIG. 199. NOMOGRAPH FOR DISTANCES AND FOCAL LENGTH IN PROJECTION

807. Optics of Projection—Choice of Focal Length—Size of the Projected Picture. The following three problems may arise in lantern practice—

(1) It is required to find the focal length of lens covering suitably a screen of given size, the projector being at a given distance (the distance reckoned from the lens). If, for example, the picture width of the lantern slide is a maximum of 3 in. and if the width of the screen is 10 ft. (120 in.), the ratio between the image on the screen and that on the slide is equal to $120/3 = 40$. Now, it is known that to enlarge an image 40 times (§ 62), the sharp image is formed at a distance from the lens equal to 41 times the focal length. If, therefore, the distance from the lens to the screen is 26 ft., the focal length of the lens for complete covering of the screen will be $26 \times 12 \div 41$ in. $= 7{\cdot}6$ in. As a rule, it is unlikely that a lens with the exact focal length required will be available, and to be

certain that the projected image will not extend beyond the screen, a lens will be chosen with the next greater focal length, e.g. one of 8 in.

(2) It is required to calculate the distance (from a screen of given size) of a lantern fitted with a lens of given focal length so that the projected image may suitably cover the screen. The picture width of the lantern slide being 3 in. (as above) and the screen measuring, say, $7\frac{1}{2}$ ft. (90 in.), we get the ratio of $90/3 = 30$. The lens having a focal length of 6 in., it must be at a distance from the screen of 31 times its focal length, that is, $15\frac{1}{2}$ ft.

(3) It is required to calculate the size of the screen to be suitably covered by a cinema film projection (picture portion of film positive about $17/25 \times 23/25$ in.) at a distance of, say, $33\frac{1}{4}$ ft., with a lens of 5 in. The proportion is obtained by dividing the distance from lens to screen by the focal length, and by decreasing the quotient by 1 unit, this giving 79. The dimensions of the screen will therefore be—

Width . . .	$79 \times 23/25 = 73$ in.
Height . . .	$79 \times 17/25 = 54$ in.

A chart (nomograph) of the kind shown in Fig. 199 enables these problems to be solved at sight (L. P. Clerc, 1921). Fig. 199 is worked out for the two sizes (16 mm. and 9·5 mm.) of substandard cine film, and consists of three scales, viz.: (1) focal lengths of projection lens from $\frac{1}{2}$ in. to $1\frac{1}{2}$ in.; (2) distances of projector from screen from $1\frac{1}{4}$ ft. to 35 ft., and (3) sizes of picture from 1 ft. to 10 ft.

By laying a straight-edge, e.g. a perfectly straight ruler, across the chart so that the edge falls on marks, on any two scales, the position of the ruler on the third scale indicates the dimension required.

For example, to find the distance from the screen for a 4 ft. picture with 16 mm. film, using 1 in. projection lens, the required distance is $9\frac{1}{4}$ ft. With 9·5 mm. film, it is $11\frac{1}{2}$ ft.

Again, to find the focal length required for a 6 ft. picture at 8 ft. from screen when using 16 mm. film, the required focal length is 0·58 in.

808. Communication Between Lecturer and Lanternist. In a well-conducted lantern show there should be no occasion for the lecturer to address the lanternist. The latter should be told by signal when to begin showing the slides, when to change the picture, or when to interrupt projection. In a hall used regularly for lantern lectures it is best to arrange two bell pushes and three wires for working two small lamps clearly visible to the lanternist. A white light, for instance, for showing a slide, and a red light for interrupting the projection. An electric bell, arranged to strike once only, or, better, a "buzzer," the sound of which is more smothered, may be used, one stroke for showing a slide and two for an interval.

For travelling use, there is the "lecturer's lamp," a dark lantern for reading notes by, which is fitted (on the side facing the lanternist) with a red window covered by a shutter except when the latter is raised by pressing a lever. Another device, acting by sound, is a clapper.[1]

809. Centring the Light Source. The adjustment of the position of the light for the uniform illumination of the screen is done as described in § 759 for regulating the light in an enlarging lantern with directed light.

This adjustment should be made before the public are admitted, the lamp being then turned off. The lens should then be capped either with a rotating cover or a metal cap, and should not be uncovered until after the light is on and the first slide is in place ready for projection.

810. Arrangement of the Slides. The slides should be cleaned and arranged in their proper order before the lecture. Nothing is so disagreeable as the projection of finger-marks or the appearance of a picture other than the one announced. Care must be taken, when arranging the slides, to place all the same way, as indicated by the spots, these being placed uppermost, so as to be readily seen at the moment when they are taken out of the box by the lanternist.

Avoid having to ask again for a slide which has already been through the lantern, as this always leads to the showing of several slides before the desired one is found, there being nothing to single it out. Subjects required twice in a lecture should be made in duplicate, or, if not, the slide should be bound with white binding strips and distinctly marked, a corresponding mark being made on a card or cover glass placed later on in the series.

When slides have been kept in a very cold room or have been carried in very cold weather, they are liable to become covered with a dew when exposed to the air of the hall. It is there-

[1] Failing these various devices, it is at least possible to inform the lanternist of the different pauses in projection by placing cards, cut to the size of the slides, at the end of each series.

fore well to warm them by putting them in racks placed close to a heating apparatus.[1]

811. Placing the Slides in the Carrier. As previously stated, the image can be projected on to an opaque or translucent screen.

In both cases the slide must be placed in the carrier so that the lower part of the picture is at the top, i.e. the indicator label in French and American slides must be at the top, while the spots on English slides must be at the bottom. These marks must be turned away from the lens when the screen is an opaque one, but they must be turned towards the lens when showing through a screen.

Before the lecture starts, the lanternist should satisfy himself that the slides handed to him bear the spots[2] and that they are all placed the same way. Failing numbers or other indication, he should ascertain from the lecturer which is the first slide to be shown. The slides must then be placed at the side of or below the lantern, placed on edge in a long box, if possible facing the same way as they will be in the slide carrier, so that it will be unnecessary to turn them round before placing in the carrier. If it is not possible to replace them after use in the same box without risk of confusion, another box must be provided in which they must be put as each one is taken out of the lantern. A careful lanternist will return the set of slides entrusted to him in such a condition that they can be shown again without any need for re-arrangement and even cleaning, the slides being never touched with the fingers except in the parts covered by the masks.

After the last slide has been shown, the lamp must be put out, but as far as possible it is necessary to avoid opening the lamp-house while it is still very hot, or at least it must be closed again immediately, so as not to produce draughts of air liable to cause cracking of the condenser. Some lanternists fit a shutter of asbestos inside the lamp-house. This is closed from outside by a lever, and protects the condenser before the doors of the lamp-house are opened. The lanternist should then cover the whole of the lantern with an old rug, for the purpose of causing it to cool slowly.

[1] A hot water container may be placed in the lantern slide box. This warmer is best made of copper, and should be filled with a solution of sodium acetate saturated at boiling point. Such a heater, warmed to 170° F. on a water-bath, will cool fairly rapidly to about 135° F., and then remains for a very long time at that temperature.

[2] The lanternist should always have ready gummed spots to mark slides handed him unmarked (this work is best done in consultation with the lecturer), and also pieces of gummed black paper to cover up marks which have been obviously wrongly placed.

CHAPTER XLVIII

STEREOSCOPY

(*a*) General Considerations

812. The Sensation of Relief. We have already seen (§ 30) that the two determining causes of the sensation of relief are the dissimilarity of the two images seen separately by the eyes and the variation in the effort of convergence of the two ocular axes. We have also seen that in proper circumstances, by viewing two perspectives of the same object, the two viewpoints being a distance apart equal to the separation of the two pupils, we obtain the sensation of seeing the object in relief (stereoscopic vision).[1]

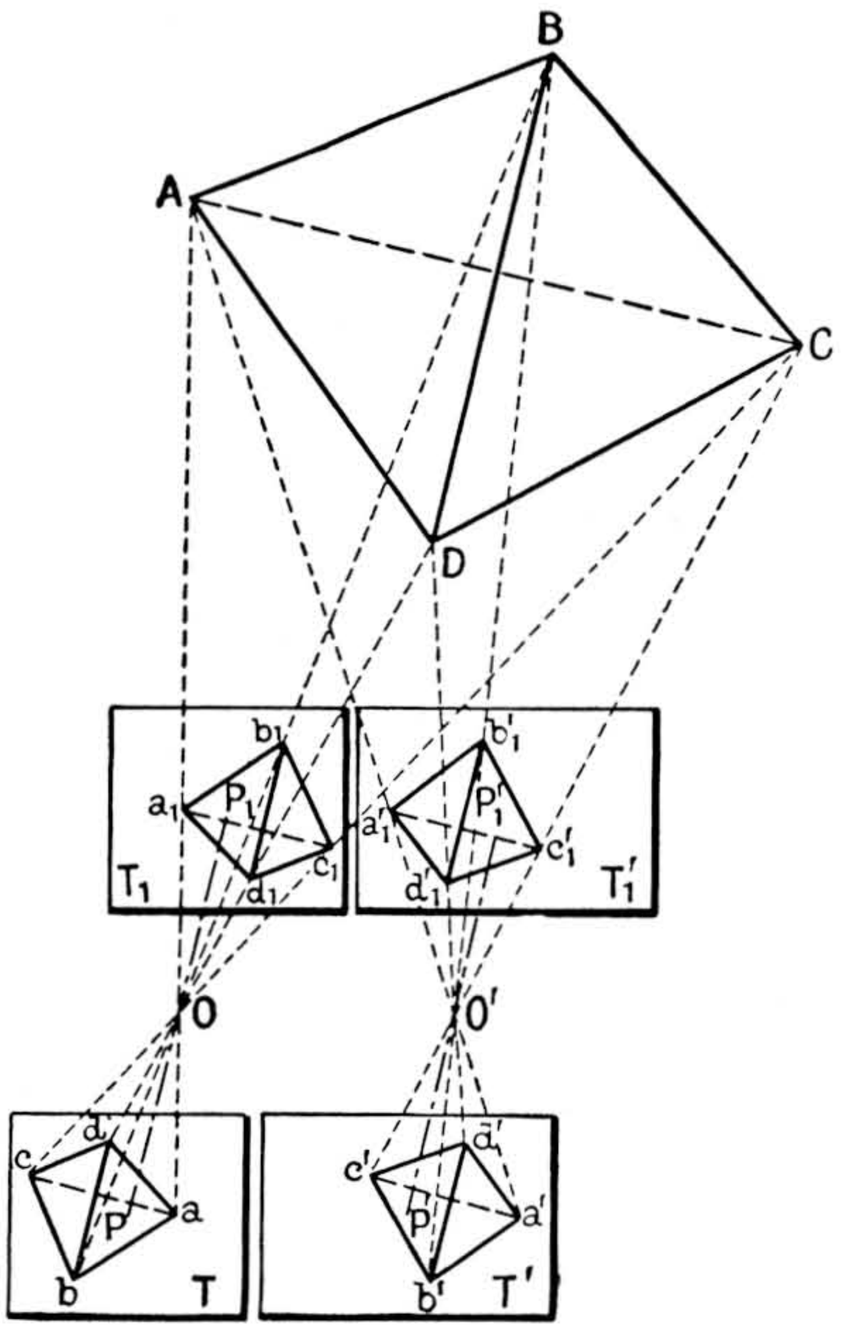

FIG. 200. OPTICS OF STEREOSCOPIC PHOTOGRAPHY

[1] Stereoscopic relief must not be confused with the slight illusion of relief seen when examining *certain* photographs through a large diameter lens, or by reflection in a concave mirror. This illusion, due to the considerable curvature of the field of the virtual image, only occurs when the nearer objects occupy the marginal part of the photograph. (Street or lane of trees viewed along its axis.)

It is, however, necessary to emphasize at the outset that stereoscopic production of relief is regulated not only by geometric considerations. While these certainly play a primary part, in stereoscopic vision, more even than in binocular vision, there is also a psychical element in the process, the nature of which is imperfectly understood. When examining the same images in the same stereoscope adjusted each time for the best effect, different observers get very different impressions of the amount of the relief.

A person having eyes symmetrically placed, equal and free from aberration, can see rapidly and without effort the relief of a stereogram (a combination of the two perspectives corresponding to the two eyes placed side by side) correctly mounted and examined in a properly adjusted stereoscope. However, the adaptability of the eyes plays an essential part in the appreciation of very slight reliefs, which are often only visible after several minutes' attentive observation.

A person whose eyes are unequal or astigmatic sees relief normally if he retains for stereoscopic viewing the correcting glasses necessary for his ordinary vision. But a subject whose defects of vision cannot be corrected (diplopia, strabism, etc.) is obviously as helpless as a one-eyed individual where stereoscopic vision is concerned.[1]

The distance between the centres of rotation of the two eyes, equal to the distance from centre to centre of the pupils when looking at a distant object, varies greatly from one individual to another, according to race, sex, and age. Its mean value is generally greater for men than women; in adults it is generally between $2\frac{1}{8}$ in and 3 in. (54 and 76 mm.), the mean adopted being about $2\frac{1}{2}$ in. (63 to 65 mm.).

813. Stereoscopic Photographs. Two photographs T and T' of the same object $ABCD$ (Fig. 200) are taken under the same conditions

[1] At the time when stereoscopic photography was introduced into France, none of the members of the Section de Physique de l'Académie des Sciences were physiologically capable of perceiving stereoscopic relief, and the principle would have been officially condemned had not a member of l'Académie, the chemist Regnault, happily endowed with two normal eyes, intervened.

from two points of view OO' (separated by a distance equal to the mean inter-ocular distance) simultaneously, with two identical lenses on two plates similarly situated, or in succession after shifting the camera parallel to the plane of the plates. From the two negatives T and T' are taken two positives T_1 and T_1', and, the eyes occupying the position previously occupied by the lenses, each positive is placed opposite the eye to which it corresponds at a distance OP_1, $O'P'_1$ equal to the principal distance OP, $O'P'$. It is necessary to give the principal points PP' a separation equal to the separation OO' of the lenses and the eyes; the image of each point is then situated on the visual ray through the point in question.

Examination of one of these photographs by the corresponding eye (the other being closed) will give, from the point of view of perspective, the same sensation as the object itself. The simultaneous examination of two images will give us the sensation of shape, size, and position which we perceive in examining the object itself, the reconstructed object being identical with the object photographed.

A transparency, being of better gradation and easier to illuminate than a paper print, always gives a more perfect illusion. It may be noted that once the two transparencies are correctly assembled, they can be examined in the four possible positions without modifying the intensity of relief or the form of the object; only its direction of presentation being changed.

814. Limits of Perception of Binocular Relief. An observer, viewing a point A situated in front of a plane P (Fig. 201) and closing alternately the two eyes, sees the point A projected alternately at a_g and a_d. Binocular vision shows us the point A detached from the plane P if the distance a $(= a_g a_d)$ is at least equal to the limit of resolution of the eye at the distance in question.

Taking 1/2,000 radian as the mean sharpness of vision and $2\frac{1}{2}$ in. as the mean separation of the eyes, and calling d and d' the distances of the point A and the plane P from the observer (all distances being measured in inches)—from the similar triangles AO_gO_d and Aa_gA_d we get

$$\frac{a}{2{\cdot}5} = \frac{d'-d}{d} \quad \text{whence} \quad d = \frac{d'}{\frac{a}{2{\cdot}5}+1}$$

and since, at the limit, $a = d'/2{,}000$, we find for the distance of a point A from the background P

$$d \lessapprox \frac{d'}{1 + 0{\cdot}0002/d'}$$

or

$$\frac{1}{d} - \frac{1}{d'} \gtrapprox 0{\cdot}0002$$

The zone of depth $d' - d$ in front of a plane in which all objects appear to be in the plane P is sometimes termed *the neutral zone*, and the depth d, measured from the observer in which binocular relief can be appreciated, the *efficient zone*. The following table gives the depth of the efficient zones and neutral zones for various distances of background—

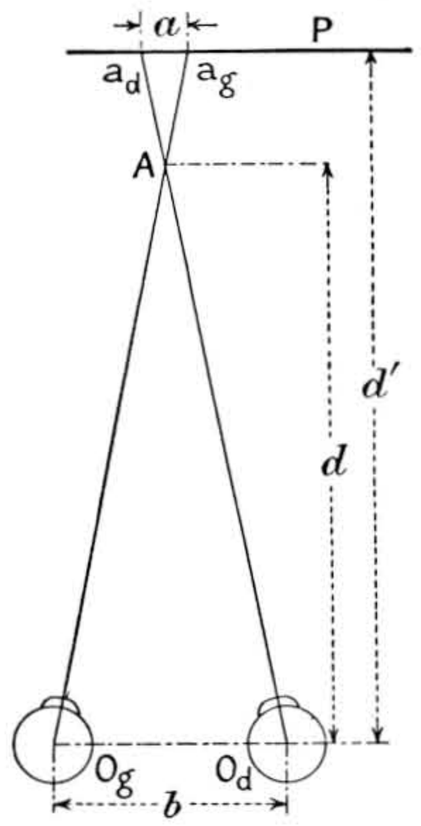

FIG. 201. ZONES IN BINOCULAR VIEWING

Distance of background. Metres	Depth of efficient zone. Metres	Depth of neutral zone. Metres
1	0·992	·008
3	2·93	·07
10	9·28	·72
30	24·4	5·6
100	56·5	43·5
300	90·7	209·3
1,000	115	885
∞	130	∞

815. Increase in Range of Stereoscopic Relief. There are two ways of extending the limits of perception of relief and of decreasing the depth of the neutral zones.

By the use of a binocular system (binoculars, field glasses) magnifying n times one can resolve

an angle n times as small. At great distances the depth of the neutral zone is thus reduced to $1/n$ its original depth, and the sharpness of vision of relief is n times as great.

By the use of a system of mirrors *mm, MM* (Fig. 202) of the *telestereoscope* of Helmholtz (1857), which enables an observer to use as viewpoint instead of his eyes at $O_g O_d$ two *virtual eyes* $O_g' O_d'$, m times as far apart, the distance between the two projections of the same point

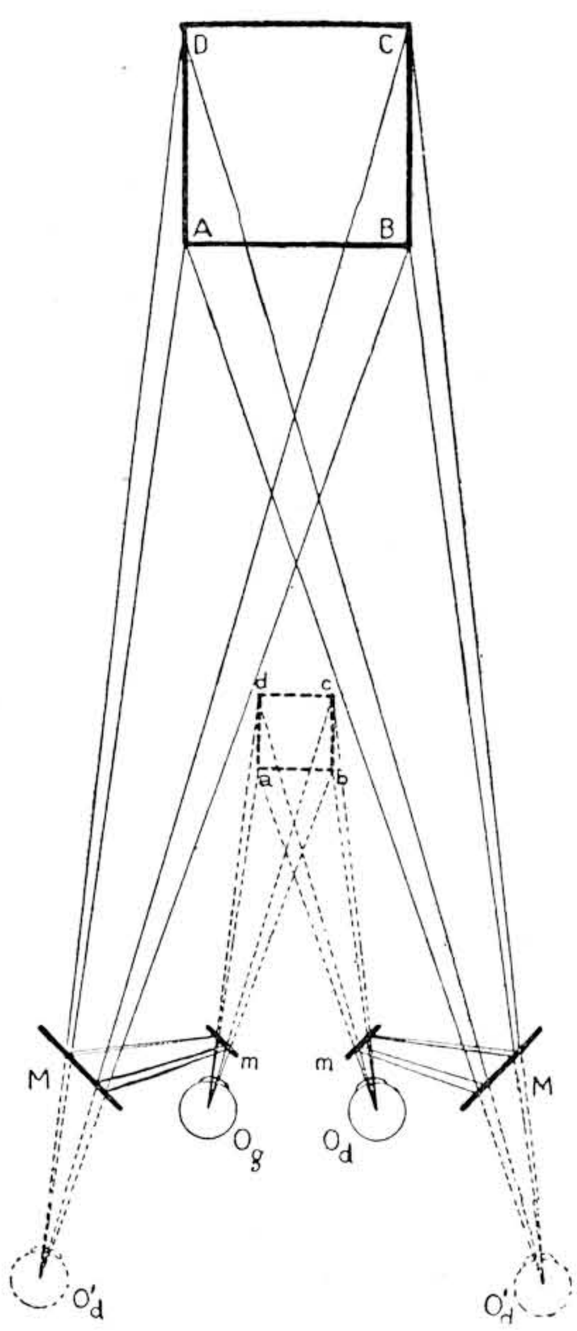

FIG. 202. MIRROR TELESTEREOSCOPE
(Helmoltz)

on the background (§ 814) is increased m times; this reduces the depth of the neutral zone to $1/m$ of its original value and gives a power of perception of relief m times as great.

These two methods put in the place of the object examined a virtual object similar to the object itself, and situated in the efficient zone of perception of relief. In the case of the telestereoscope the visual rays used coming from the object *ABCD* appear to come from the object *abcd,* forming a model reduced in the ratio $1/m$ and situated at a distance from the observer equal to $1/m$ of the distance of the object in question.[1]

[1] In prism binoculars and stereoscopic telemeters these two methods of increasing relief are combined.

The same means can be used to increase the intensity of relief in the examination of stereoscopic photographs and extending the range of the stereoscopic vision.

In general it would be fruitless to attempt to augment the power of separation by examining photographs under high magnification, but one can at least examine at short distance photographs taken at great distance, bearing in mind that under these conditions the reconstructed object is no longer similar to the original, but is a deformation of it (§ 27 and § 822).

Increase of the *base* (distance apart of the two viewpoints or stations) is the most usual means of reproducing stereoscopically objects situated outside the range of stereoscopic vision

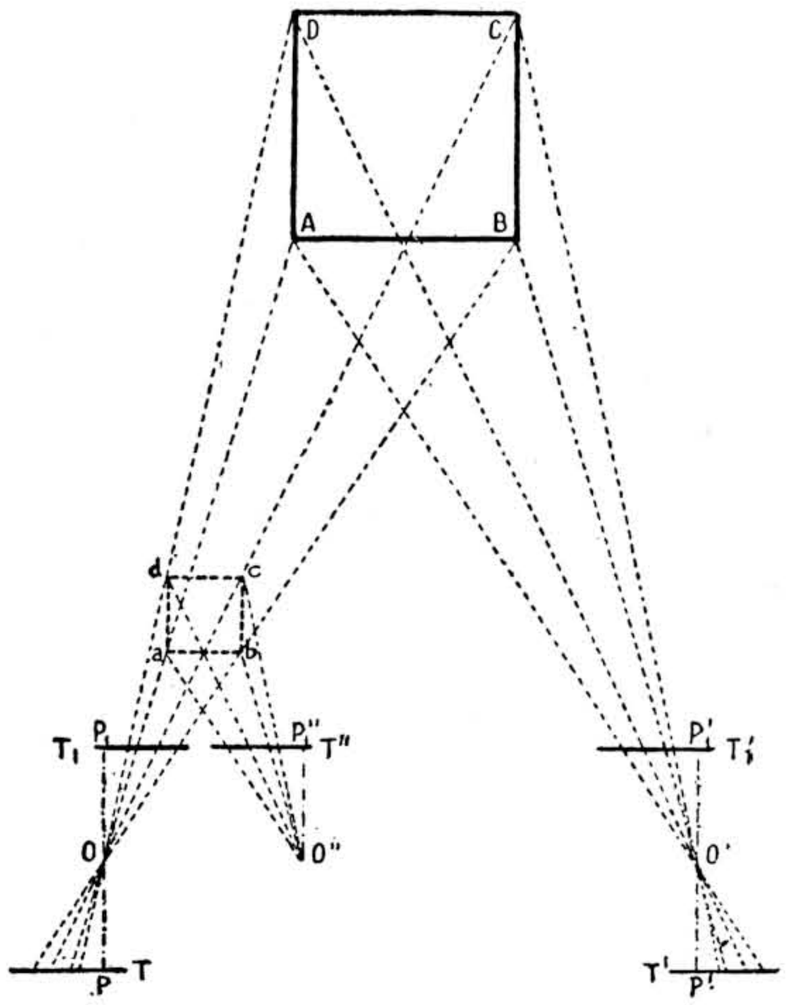

FIG. 203. STEREOSCOPY WITH WIDELY SEPARATED VIEWPOINTS

whatever the distance of the objects from the observer may be. Stereoscopic photographs have been obtained of the satellites of Jupiter, and even of stars, with bases of enormous length obtained by the displacement of the earth in its orbit. Bases of the order of a mile are frequently used in aerial photography at high altitude. Bases up to 100 yards are used on the earth to obtain stereograms for the construction of maps.[1]

The reduction of the apparent dimensions of the object viewed is usually compensated in the telemeters by making the magnification at least equal to the ratio of the distance apart of the objectives to the distance apart of the eye pieces.

[1] Inversely, bases smaller than the separation of the eyes are used for stereoscopic photography of small

This process is usually known as stereoscopic photography with a large base; also under the name, incorrect in our opinion, hyperstereoscopic photography.

Take two photographs T and T' of a distant object $ABCD$ (Fig. 203), the camera being moved horizontally in a direction parallel to the plate between the two exposures. The lens thus passes from the position O to the position O' such that OO' is m times the separation of the eyes. Each of the prints T_1 and T_1' observed with one eye occupying the position of the corresponding viewpoint will give us the same sensation as that experienced in observing the object directly from the corresponding position.

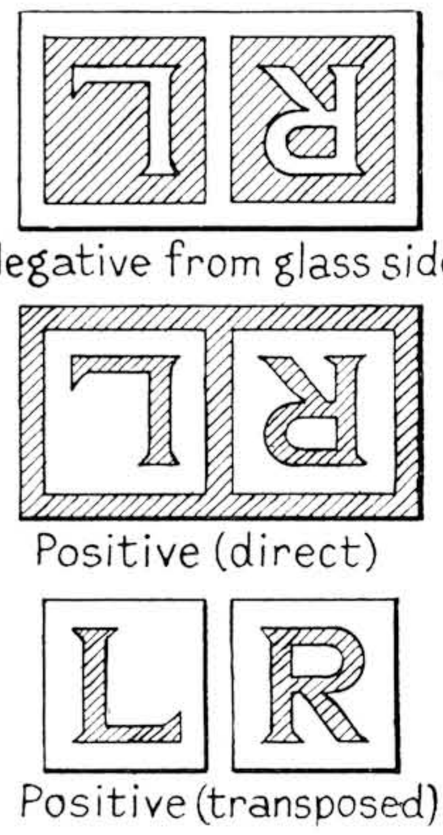

FIG. 204. TRANSPOSITION OF THE STEREOSCOPIC PAIR

Place the two photographs side by side, taking account of their orientation (left and right), and separate their principal points by a distance equal to the mean distance between the eyes; and examine the result in a stereoscope, the eyes being placed at O and O'' opposite the principal points at a distance from them equal to the principal distance. We shall then experience the same effect as we should obtain by viewing direct the object *abcd*, which is a reduced model of the object $ABCD$ in the ratio $1/m$ and situated at a distance m times as near[1]. Photographs of this reduced model taken from the positions O and O'' would give exactly the same effect as photographs of the real object $ABCD$ taken from positions O and O'.

816. Stereoscopic Transposition. In the usual practice of amateur stereoscopic photography, the two negatives of the stereoscopic pair are taken simultaneously on the same plate in a camera fitted with two lenses and divisions.[1]

It can easily be seen (Figs. 200 and 204) that in order to place before each eye in its correct position the image corresponding with it, it is necessary to separate the two images, turning each through 180° to compensate for the rotation through 180° suffered by each in the camera.

Instead of cutting the positive transparency and then transposing the images, it is better to print in two stages (Fig. 205), printing on the right half of the plate the right-hand image which appears on the left-hand side of the negative viewed in the normal way, and then on the left half of the plate the left-hand image which appears on the right side of the negative. The name "reversing frame" by which the printing frame used in this transposition is known, and the instructions which accompany its description in some catalogues, have led some photographers to imagine that for correct vision of a stereoscopic pair one must present the image formed by the right-hand lens to the left eye, and vice versa, whereas the transposition is made solely for the purpose of placing the left image before the left eye. Without this precaution, the left image would appear in front of the right eye, and vice versa.

817. Pseudoscopic Pairs. When two perspectives of a geometric solid are viewed in a stereoscope, the left perspective being presented to the right eye, and vice versa (e.g. the two drawings of a dodecahedron reproduced in Fig. 206), the faces which in normal vision appear in front will appear behind (and vice versa), the

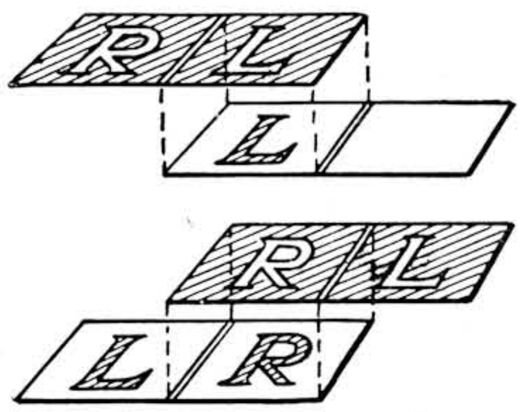

FIG. 205. TRANSPOSITION IN STEREOSCOPIC PRINTING

[1] It is easy to verify this fact by the following reasoning (G. Cordonnier, 1931): if the projections of the optical axes (in the position as when taking a photograph) be drawn on the ground, these two lines will appear at the separation of the eyes when examined stereoscopically because each of these lines occurs in the same vertical plane as the axis of the corresponding ocular; the entire landscape is evidently reduced in the same proportion.

[1] In all cases when a stereoscopic camera utilizing a single plate is used for two successive exposures, for photographing very distant or very near objects, it is easy to register the two images in such a way that the negative does not require transposition. It is only necessary to take the left-hand view with the right hand lens, and vice versa, the distance moved between the two exposures being thus increased by the distance between the lenses.

reconstructed solid being thus the inverse of the original object, the reliefs appearing as hollows and the hollows as reliefs. This phenomenon is generally known as pseudoscopy.

If a pair of stereo photographs whose images have not been transposed is examined in the usual way (e.g. if the pair consists of the two images produced in a stereoscopic camera fitted with two lenses), an analogous phenomenon tends to occur, but very often the stereoscopic effect is opposed to the perspective, and sometimes even contradicts common sense, an object partially masking another often appearing behind the object it hides.

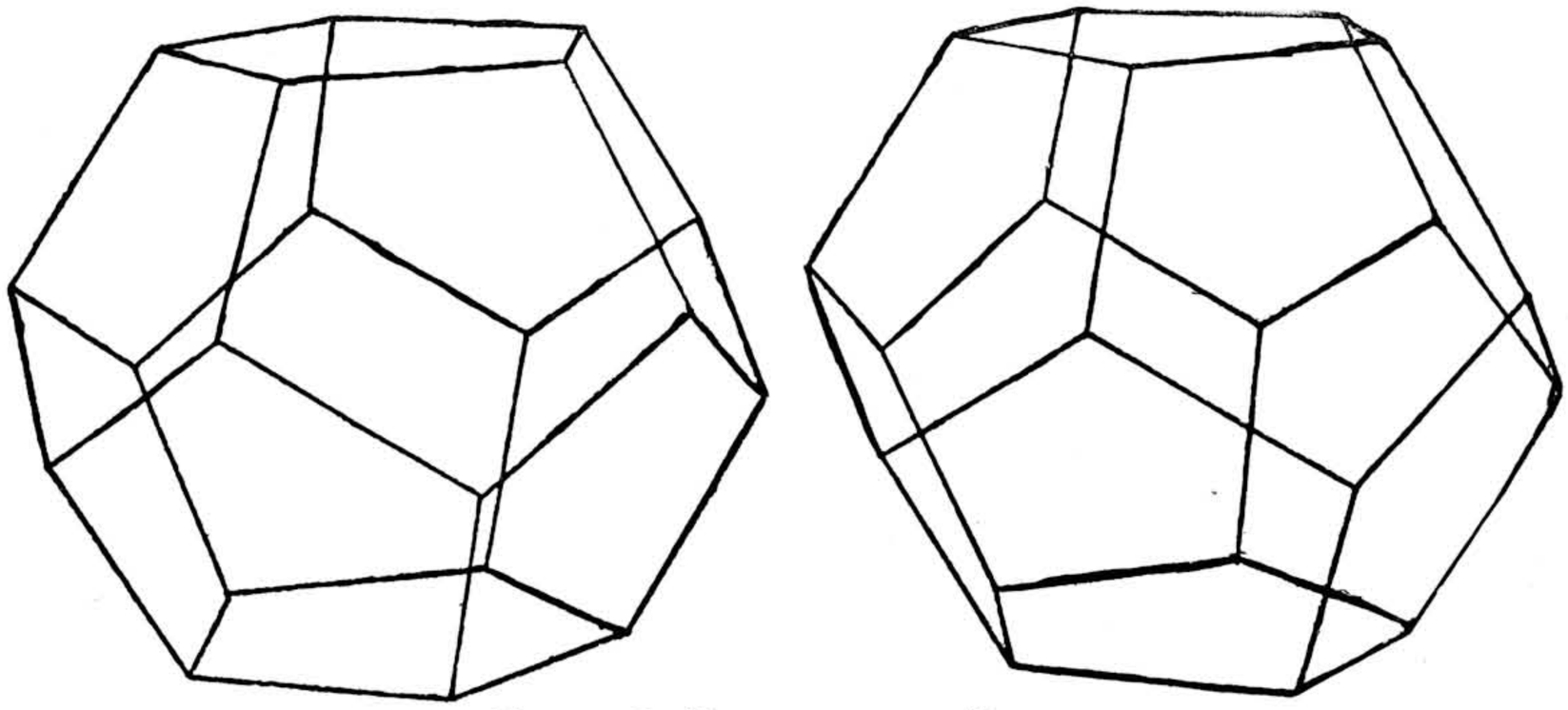

FIG. 206. PSEUDOSCOPIC RELIEF

There are, however, cases where the inversion of relief by the examination of pseudoscopic pairs affords a useful control of deductions made from stereoscopic photographs[1] by eliminating all the effects of auto-suggestion in the perception of shape. Such is the case, for example, in radiography, where pseudoscopic vision may be used to reverse the perspectives, thus bringing the further objects to the front for examination.

818. Planoscopic Pairs. Two identical perspectives[2] obviously cannot give a stereoscopic effect, for there is no variation in the convergence of the optical axes when objects at different distances are examined.

When one of the negatives of a stereoscopic pair is useless, an amateur will sometimes take two prints from the good negative, making what is known as a planoscopic pair. The viewing of such a pair in the usual stereoscopic manner, each eye occupying the viewpoint of one of the images, which is merely the normal condition of monocular vision of a photograph (§ 27), often gives a certain appearance of depth; it is not comparable with the true stereoscopic effect, but sufficient to cause a planoscopic pair to pass unnoticed by an inexperienced eye in a series of stereoscopic pairs.

(*b*) GEOMETRICAL CONSIDERATIONS; DEFORMATION OF THE RECONSTRUCTED OBJECT

819. Corresponding Points — Variations of Their Separation. The pairs of points appearing one in each image of a stereoscopic pair and corresponding with a single point in the object are termed homologous (corresponding) points.

Consider (Fig. 207) two photographs T and T' taken from two points S and S', the optical axes SP, $S'P'$ being parallel and perpendicular to the base SS', the images T and T' are in the same plane, which we will assume vertical, the optical axes being then horizontal. The two images rr' of a point R at infinity appear at a distance rr' apart equal to the distance PP' of the two principal points and the distance SS' of the viewpoints.

The two corresponding points aa' of a point A at finite distance are farther apart. Draw a line through S parallel to $S'a,'$ cutting the picture T in a''; the length aa'' represents the variation of separation of corresponding points in passing from a point at infinity to the point A in question.

[1] If an object A is four times as far from the observer as a similar object B at the time of taking the photographs, its image will be one-fourth the size of that of B. In pseudoscopic examination A appears four times nearer than B, where it becomes four times as large as B; as it is, on the contrary, four times smaller than B, it will appear to be sixteen times smaller than B; the size attributed to objects varies, therefore, as the square of their distances (E. Colardeau, 1916).

[2] Whether taken from the same viewpoint or from two points insufficiently separated relative to the distance of the object.

Denote the length of the base SS' by b; let F be the common principal distance of the two perspectives (equal to the focal length if the camera is focussed for infinity); d is the distance from the point A to the base SS', and e the increase of separation of the corresponding points. From the similar triangles SAS' and aSa'' we get the relation $e = bF/d$; we thus see that the increase in separation of the corresponding points in passing from a point at infinity to a point at finite distance (the increase being measured on the negatives in the same position as when recording the images) is proportional to the distance apart of the viewpoints, to the principal distance, and inversely proportional to the distance d (§ 60) of the points considered. It will be noticed that the value $(b + e)$ of the separation of corresponding points is constant for all points in the plane AC, which passes through the point A and is perpendicular to the optical axes; its value will be smaller for more distant planes and greater for planes nearer the camera. Conversely, in a stereoscopic pair taken under normal conditions, all corresponding points having the same separation correspond with points in the object situated in the same front plane.

On transposition, the differences of separation between corresponding points on the positives T_1 and T_1' retain the same values, but in the inverse sense; the nearer the object point was to the observer, the less the separation of the corresponding points, which causes the variation of convergence of the optical axes in the same sense as when the object itself is examined.

820. Parallax. The angle subtended by the base at the point A, SAS' (Fig. 207), is termed the parallax of the point A. Notice that there is no relation between the parallax and the separation (or variation of separation) of corresponding points. We have seen that this separation is constant for all points of the space-object in the same front plane, whilst the parallax is constant for all points of the space-object situated on the circumference of a circle drawn through the points S, A, and S', and thus for all points on the surface generated by the rotation of the circle about the base SS'.

Considerations of parallax are of little importance in stereoscopy, and the subject is only mentioned here owing to the confusion which sometimes arises between it and the idea of separation of corresponding points in the minds of many students of the subject.

821. Deformations of the Reconstructed Object Due to the Circumstances in which the Photographs are Taken. In the various cases hitherto considered we have always assumed the images of the two perspectives to be in the same plane, and the optical axes perpendicular to this plane, and therefore parallel. Under these conditions the reconstructed object is similar to the object itself if viewed correctly in the stereoscope.

It has often been suggested that for stereoscopic photography the axes of the two lenses should converge on to the point of interest in the subject to be photographed, in the same way as the eyes converge on an object. This

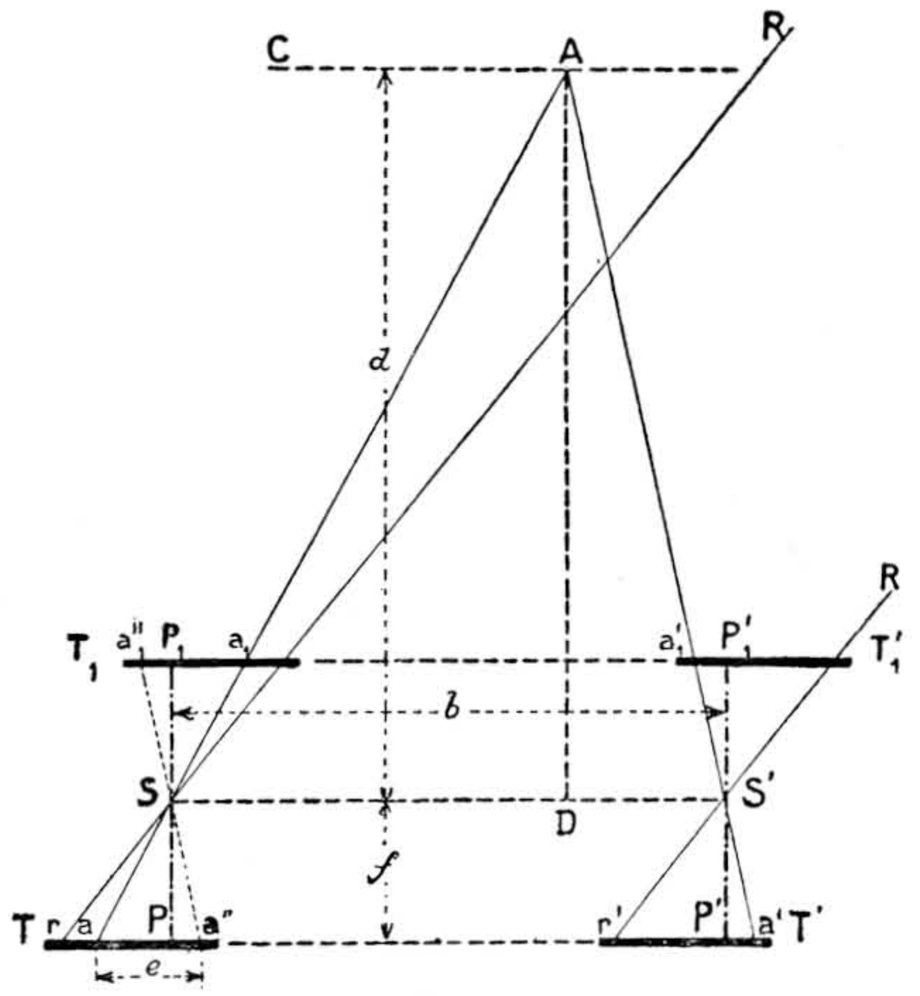

FIG. 207. GEOMETRY OF CORRESPONDING POINTS

reasoning by analogy is unsound, since it neglects an extremely important difference between the eye and the photographic plate, the retina being approximately spherical whilst the plate is flat. The fact that the two images are generally brought into the same plane for viewing causes, on one hand, a discordance which, in the part of the field common to the two images, prevents their stereoscopic fusion to some extent, and, on the other hand, in the parts where this fusion is possible, occasions a deformation of the reconstructed object.

It is easy to show geometrically,[1] and to verify it experimentally, that all the points on a cylinder, generated by a vertical, having for

[1] The reader interested in the various deformations arising from anomalies in the circumstances in which stereoscopic pictures are taken or viewed will find a mathematical study of these deformations in *Applications de la Photographie Aérienne*, by L. P. Clerc (Paris, 1920), Part IV, Chapter V.

directrix the circle drawn through the two viewpoints and the point of convergence of the axes (sometimes called the *horoptic circle*) appear, when viewed stereoscopically, to be situated in a front plane. Points inside the horoptic cylinder situated on certain ellipses (or more exactly on cylinders having the ellipses for directrices) containing the two viewpoints, and having their major axes parallel to the base, appear also in front planes, as do also points outside the horoptic cylinder situated on ellipses containing the two viewpoints and having major axes perpendicular to the base, ellipses of which the curvature is greater the greater their distance from the base, appear also in front planes. Conversely, points located on front planes appear to be situated on convex cylinders of greater or less curvature according as the distance from the base is greater.[1]

Another deformation occurs if the optical axes, through remaining parallel, are not perpendicular to the base; the two pictures are then not in the same plane, but in parallel planes. This condition is often produced accidentally when taking stereoscopic negatives by two successive exposures of a single camera by displacement. This does not occur if the necessary precautions are taken to ensure the correct placing of the camera in the two positions.[2]

In this case there appear as front planes (relative to the direction of the optical axes) inclined planes, of which the inclination is equal and opposite to that of a plane drawn through the two viewpoints perpendicular to the plane which contains the optical axes (strictly, these surfaces are the surfaces of parabolic cylinders with such small curvature that they can be regarded as planes, even when extended over a considerable field).

[1] At least one case can be cited in which stereoscopic photography is only possible by a geometric method equivalent to photography with converging cameras. Stereoscopic photography of the moon is only possible owing to the *libration* of that body, i.e. a periodic oscillation exposing on each side of the mean edge a narrow strip of about 8°. The pair consists of two photographs taken at the two extreme phases of this libration. The exaggeration of relief which results from the convergence of the axes towards the centre of our satellite is compensated for (§ 822—I) by the fact that the images are always viewed at a much smaller distance than the principal distance (equal to the focal distance of the telescope used).

[2] This condition occurs frequently in aerial photograraphy when the optical axis is not exactly vertical, and the photographs are taken at the same altitude; or, if the optical axes are vertical, it may occur if the pictures are taken at different altitudes.

822. Deformations of the Reconstructed Object in Stereoscopic Viewing. Various deformations arise when examining a normal stereoscopic pair under abnormal conditions. These deformations are the same as those which appear in monocular examination of a perspective when the eye is not placed at the viewpoint (§ 25), but with the sensation of a quasi-materialization of the deformed object owing to the binocular vision.

(1) The most frequent deformation is that caused by viewing a stereogram with the eyes placed at a distance other than the principal distance from the photographs. The dimensions in depth then appear either compressed or extended, relatively to the transverse dimensions, according as the distance of viewing is smaller or greater than the principal distance. If one considers an object whose depth is only a small fraction of the distance at which it is examined, close or distant examination increases or decreases the apparent transverse dimensions without increasing the relief; for example, a cube resting on a table with one of its faces perpendicular to the direction of vision appears as a rectangular parallelopiped with a square base when viewed at a distance other than the principal distance. The thickness of the solid thus formed is invariable, but the dimensions of the front and back faces appear greater the smaller the distance from which it is examined.

(2) Assume that the eyes are placed at a distance from the stereogram equal to the principal distance, and the line joining the principal points is equal and parallel to the line joining the centres of rotation of the eyes of the observer. Assume also that the eyes do not occupy the viewpoints (decentring of the eyes relative to the stereogram). The different planes of the object thus formed slide on one another without altering their respective distances, the object thus suffering a twist such that lines of the object perpendicular to the plane of the stereogram appear as oblique lines parallel to the lines joining each eye to the corresponding principal point. A cube photographed under the same conditions as in the preceding case will appear as a parallelopiped with square base but having four edges parallel to the direction in which the principal points are viewed.[1]

(3) Much more serious deformations occur

[1] The two deformations considered above are particularly easy to obtain during a demonstration of stereoscopic projections (§ 857) or in the examination of anaglyphs (§ 856), when one moves relative to the screen or picture.

when the separation of the principal points of a stereoscopic pair[1] is not equal to the separation of the eyes of the observer. If the separation of the eyes is greater than that of the principal points, a cube photographed as in the preceding case will appear as a species of the trunk of a pyramid seen from its larger end, and of smaller depth than the actual cube. Conversely, if the separation of the eyes is smaller than that of the principal points, the reconstructed solid will be a kind of pyramid trunk seen from its smaller end and of greater depth than the cube. In both cases the scale of depth is affected; an object plane drawn half way between the front and the back face will appear, in the first case, nearer the back face, and, in the second case, nearer the front face.

The three deformations which we have considered can be understood by imagining the visual rays to be replaced by elastic thread, so that in registering the elementary perspectives and in viewing the pair these threads are all the time attached to every point of the perspectives, and follow the eyes of the observer in all positions.

It is obvious that several conditions of viewing a stereoscopic pair may be violated at once; the resulting deformation is the sum of the elementary deformations.

823. Consider a stereoscopic pair viewed under the correct conditions, and suppose each image turned through the same angle about its principal point. If the reliefs of the reconstructed objects are feeble relative to the distance of the object itself, stereoscopic vision remains possible, but the relief diminishes more and more until it vanishes at a rotation of 90°. After this, it gives a pseudoscopic effect of increasing intensity until a rotation of 180° is obtained; the same phenomena then repeat themselves in inverse order.

Such anomalies obviously cannot occur in subjects where vertical lines appear, but every precaution must be taken to avoid it in the case where there is nothing to give a sense of depth in one of the pictures by itself; this is often the case in various scientific or technical applications (aerial photographs taken vertically, astronomical subjects, photographs of fossils, anatomical preparations, photo-micrography, etc.).

824. Range of Stereoscopic Vision. By reason of the aberrations of the lens and the grain of the photographic image, the values previously calculated (§ 814) for the range of direct binocular vision cannot be used in the case of stereoscopic photographs taken from a base equal to the separation of the eyes. The values calculated for the extent of the effective zones are the maxima, whilst those for the extent of the neutral zone are the minima.

In the most favourable circumstances the range of stereoscopic photography is not as much as 80 yd. When using objectives of short focal length and rapid emulsions with pronounced grain, the stereoscopic range sometimes does not exceed 16 yd. This is why it is usual, in stereoscopic photography of landscapes, to include in the field a near object serving to enhance the sensation of relief, in the manner of a material foreground in a diorama.

These ranges are obviously very different when the base is smaller or larger than the separation of the eyes. If, for example, a pair taken from the two extremities of a base of length B with a principal distance F is examined at a distance f from the pair (or with eyepieces of focal length f), variation of separation between the pairs of corresponding points of two objects situated respectively at distances d and d' is

$$e - e' = BF\left(\frac{1}{d} - \frac{1}{d'}\right)$$

so that, for corresponding points of the reconstructed solid to appear at different distances, it is sufficient that the variation $(e - e')$ is greater or equal to the limit of separation $f/2{,}000$, then

$$\frac{1}{d} - \frac{1}{d'} \geqslant \frac{f}{2000BF}$$

or

$$d \leqslant \frac{BF}{\frac{f}{2000} + \frac{BF}{d'}}$$

Taking, for example, the values

$f = 10$ cm. $\quad F = 50$ cm. $\quad B = 200$ m.

we find as range 2,000 kilometres and as depth of the neutral zone 2 metres to 2,000 metres, or 0·5 metres to 1,000 metres.[1]

It will be noticed that if the distance from the background remains the same, the extent of the

[1] When the examination is effected by means of an optical instrument, the principal points themselves must no longer be considered, but the principal points of the virtual images formed by the instrument used.

[1] The value $F/2000$, chosen arbitrarily for the resolving power of the plate, would correspond here to the separation of images less than $\frac{1}{500}$ in., a condition only realized with slow plates, such as are used in map surveying by stereoscopic methods from stations on the ground.

neutral zone is constant if, all other conditions remaining the same, the product BF of the base and the principal distance is a constant. To obtain at different distances d' stereograms of the same power (same extent of neutral zone) the product BF must be varied proportionally to the square of the distance d'.

825. Normal and Exaggerated Relief. The relief perceived in the viewing of the stereogram of a very distant object or an object of microscopic size is often said to be exaggerated. But without this exaggeration it would be useless; our eyes would not be able to perceive the relief of a distant range of mountains, or of the ground as seen from an aeroplane, or of a microscopic preparation.

An object a, m times as small as an object A, and situated m times as near, gives a sensation of relief m times as great, and it is here that the large bases become useful in stereoscopy.

If it is correct to say that, under certain conditions, the sensation of relief is much more pronounced, it is not correct to speak of exaggerated relief when the reconstructed object is similar to the object itself, the stereogram being viewed under normal conditions.

One should avoid as far as possible the use of the expression *exact relief*. If under certain conditions we can obtain a stereogram which, correctly viewed, suggests perfect similarity between a relatively thin object and its image, objects situated nearer or farther from the observer will not give this sensation of similarity; the relief will be increased for near objects, and weakened for distant objects. We know, besides this, that the stereoscopic sensation varies from one individual to another.

(*c*) The Examination of Stereograms: Stereoscopes

826. Viewing Stereograms with the Naked Eye. By making the axes of the eye diverge, some people can view normal stereoscopic pairs with the naked eye, provided the distance between the principal points is little different from the separation of the eyes. Such viewing is made easier by holding a piece of cardboard between the two pictures perpendicular to their common plane.

It is generally easier, by causing the axes of the eyes to converge (as in convergent strabism), to see in relief a pair which, when viewed normally, has the characteristics of a pseudoscopic pair, the left perspective being on the right, and vice versa. This kind of viewing is made easier by holding a mask at some distance from the eyes, only allowing one eye to see the single image which corresponds to it (Elliott and Waterston, 1857).

For example, to view at about 10 in., the two perspectives of the regular dodecahedron reproduced in Fig. 206 (M. Miet, 1921) one must hold at about 4 in. from the eyes a card with an opening of about $1\frac{1}{5}$ in. square.[1]

Examined with a binocular stereoscope (Fig. 208), this same drawing appears to be a dodecahedron, but not regular, in which the near faces will be those which appeared farthest when examined with the naked eye.

Remember, however, that the viewing of a stereogram with the naked eye by divergence or convergence of the ocular axes[2] is a great strain, so that it is impossible to make a complete study of a series of stereograms or to examine more than a few at a time.

827. Stereoscopes with Convergent Eyepieces. Most of the stereoscopes used for amateur stereoscopy and for some scientific and technical applications are derived from the prismatic lens stereoscope of Sir David Brewster (1844). In its original form this instrument used as eyepieces two convergent lenses having their centres outside the centres of the two eyes (often reduced to two half-lenses), the separation of the centres being about 25 per cent greater than the separation of the eyes. Under these conditions one can view without fatigue a stereogram in which the separation of the principal points is about 15 per cent greater than the separation of the eyes, and may thus reach about 3 in.[3] A "binocular stereoscope" is represented in Fig. 208 (A. Buguet, 1891). This is the simplest form of stereoscope, useful for examining stereograms printed in a book or periodical. In Fig. 209 the paths of the rays are indicated in such a stereoscope, for the case of a near point of the reconstructed object (the ocular axes are convergent).

[1] Owing to the convergence of the ocular axes, the reconstructed solid appears to be situated practically half way between the plane of the pair and the eyes. This object appears much smaller than either of the images viewed from the same point with monocular vision, after removing the mask.

[2] These two methods of viewing were suggested by Wheatstone (1838), who, in the first case, recommended the use of two tubes directed towards the principal points of a stereogram, the separation of these points being reduced.

[3] If the virtual image given by each of the eye-pieces were always at infinity, the adjustment being made instinctively by an observer with normal eyesight, the separation of the principal points would equal the separation of the ocular axes.

The eccentricity of the eyepieces increases the inevitable aberrations met with in the use of uncorrected or partially corrected lenses, the more so since the lenses must be of the shortest focal lengths compatible with covering the wide angle of the field; and the shorter the focus the greater the aberrations due to the eccentricity of the eyepieces. It is therefore an advantage to have a stereoscope in which the separation of the eyepieces can be adjusted.

Some years ago cameras giving images farther apart than the mean separation of the eyes were almost completely abandoned in amateur stereoscopy. Under these conditions the separation of the principal points is equal to the mean separation of the eyes, and the eyepieces can

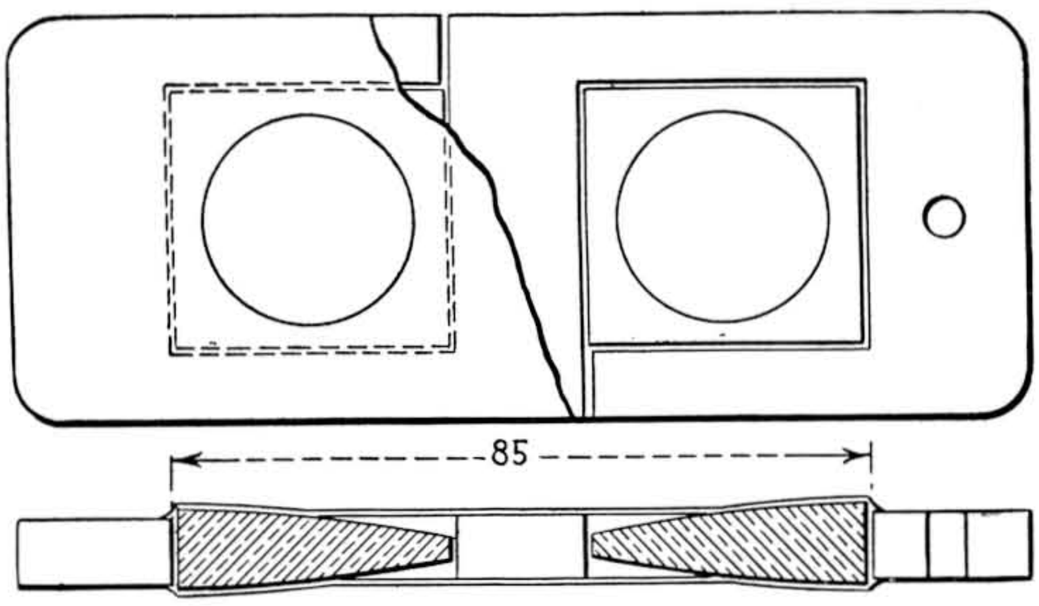

FIG. 208. STEREOSCOPIC BINOCLE
(Buguet)

generally be centred relatively to the eyes. However, individuals having eyes abnormally close together require the eyepieces farther apart than those adjusted for eyes having a separation at least equal to the mean. Further, an observer unaccustomed to stereoscopic viewing can accommodate his eyes more easily to eyepieces having a greater separation than those which will suit him, after he has had some practice in stereoscopic viewing. For these two reasons stereoscopes are to be preferred which include the means of regulating the separation of the eyepieces,[1] besides the usual power of making the images coincide.

[1] It is not unusual that a person unaccustomed to stereoscopy, to whom you give a stereoscope not adjusted to his eyes nor to the separation of his pupils, declares after a few seconds that he sees much better by closing one eye, his attempts to adjust the eyepiece having been haphazard. To adjust a stereoscope one must first adjust the focus by closing one eye for an instant, and then, with both eyes open, adjust the screw governing the separation of the eyepieces (by a rod carrying a thread cut so as to move each eyepiece in the opposite direction) until the two images coincide

We cannot go into all the variations met with in practice, and must refer the reader to the catalogues. However, we may mention the stereoscope in jumelle (conical box) form, which is excellent for viewing transparencies,[1] and, by adjusting a movable shutter fitted with a mirror, also for the viewing of stereograms on paper.

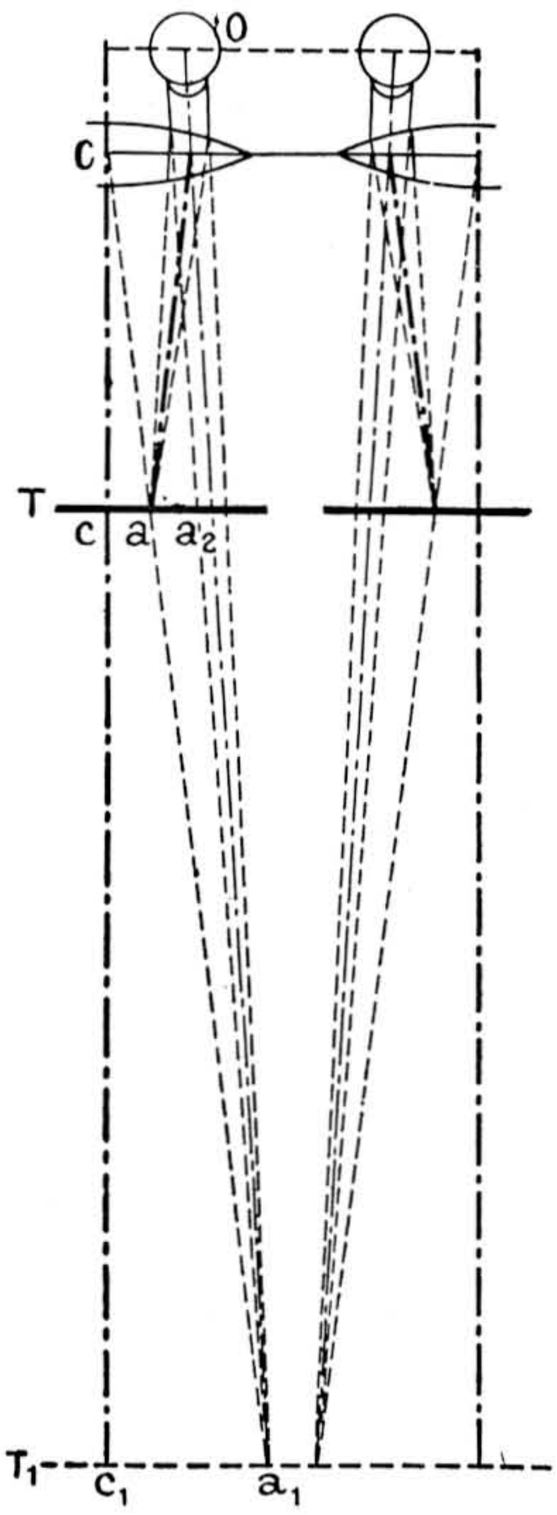

FIG. 209. PATH OF RAYS IN BUGUET BINOCLE

There are also the simplified stereoscopes used for paper prints, automatic stereoscopes with metal frames for the pictures mounted on endless chains (of which some models do not function until a coin is placed in the slot), stereoscopes

without the least effort of convergence of the eyes. These trials are usually avoided if the separation of the eyepieces is made about $\frac{2}{5}$ in. greater than the separation of the eyes. Stereoscopes intended for the use of unaccustomed observers may be graduated to indicate the separation of the eyepieces.

[1] Interesting effects may be obtained by removing the ground glass used as diffuser, which forms the back of the stereoscope, and using a diffusing reflector, e.g. plates of matt metal, tinted papers, etc. (G. Cromer, 1919).

for films run from one spool to another, and the cabinet stereoscopes with interchangeable magazines (made about 1900) in which one picture is substituted for another by pressing a lever.

828. Complementary Stereoscope. The essential condition for the reconstructed object being identical with the objects itself is that each of the images is seen at a distance equal to the principal distance, or at least by means of an eyepiece of focal distance[1] equal to this principal distance (§ 25, footnote). When one restricts oneself to the photography of distant objects, the principal distance is practically equal to the

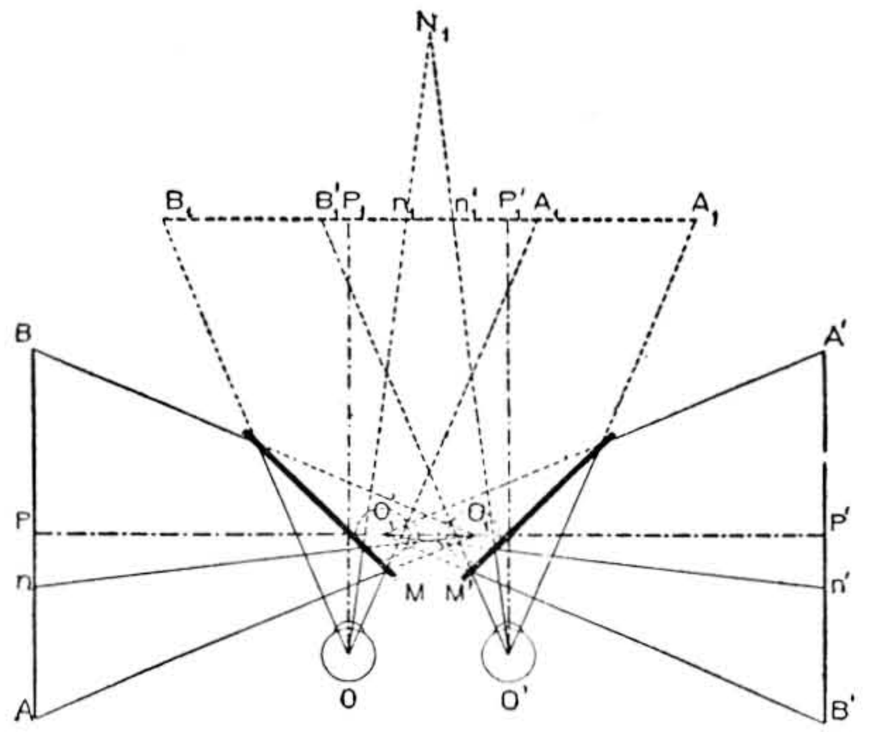

FIG. 210. WHEATSTONE STEREOSCOPE

focal length of the objectives used to take the photographs, and the above condition is then satisfied if the eyepieces of the stereoscope have the same focal length as the objectives of the camera; it is said then that the stereoscope is complementary to the camera used.[2]

The general practice in stereoscopy is to fit the camera with lenses of very short focal length, and it is sometimes difficult to fit the stereoscope with such short-focus eyepieces, owing to their higher cost. The greater curvature of such lenses compels the use of a smaller number at once; the field is limited owing to the considerable thickness of the edges, and also to the distortion of the marginal regions. Thus the eyepieces of stereoscopes are frequently of greater focal length than the camera lenses, resulting in exaggeration of the foreground and deformation of the reconstructed object, and tending to give the effect of theatre scenery in successive planes.

When the difference of focal length is not considerable one can often add an auxiliary lens (§ 118) to each eyepiece of the stereoscope, the power necessary being the difference of powers (§§ 60 and 70) of the camera lens and stereoscope lens.[1] Meniscus lenses of diameter equal to the stereoscope lenses are chosen for preference, and are introduced into the mounts. They are kept out of contact with the stereoscope eyepieces by means of cardboard rings of sufficient thickness, and placed next to the eyes with their convex faces outwards (C. Schitz, 1914).

829. Stereoscopes Using Symmetrically-placed Mirrors. The stereoscope of C. Wheatstone (1838) employed only two mirrors, M and M' (Fig. 210) at right angles, and placed at 45° to the direction of vision. The two photographs constituting the pair are represented by AB, $A'B'$, parallel to the plane bisecting the two mirrors. Under these conditions the eyes O and O' see at A_1B_1 and $A_1'B_1'$, the reversed images of AB and $A'B'$, two homologous points n and n' being seen respectively at M_1 and M_1' and giving thus the illusion of a point N_1 of the reconstructed object at the intersection of the rays On_1 and $O'n_1'$. The necessity of using reversed images has somewhat reduced its popularity, in spite of the fact that there are no limits to the size of the photographs which may be viewed.

Inspired by the telestereoscope of Helmholtz (§ 815), L. Cazes (1895) made a stereoscope using two pairs of mirrors, $mm'MM'$ (Fig. 211), for viewing stereograms of large size having the pictures placed side by side in the same plane. The " virtual " eyes O_1O_1' are brought each time opposite the principal points PP' (their separation may vary from 5 in. to 20 in.) by sliding the mirrors MM' on rails RST (graduations on the rails enable one to make sure the mirrors are symmetrically placed). The whole instrument is carried on an extensible vertical column to ensure equality between the distances O_1P, $O_1'P'$, and the principal distances of the perspectives (up to 25 in.). Converging or diverging lenses may be placed in front of the eye mirrors,

[1] The focal length of the eyepieces is not marked on stereoscopes; it may be found with reasonable accuracy (especially when the eyepieces consist of achromatic plano-convex systems having the convex side facing the images) by using the stereoscope as a camera to focus a distant object on its ground glass screen; the focal length is then the distance from the pole of the eyepiece to the screen.

[2] Placing a stereogram in a complementary stereoscope, and placing oneself at the actual viewpoint, one eye looking in the stereoscope and the other looking directly at the view, the two images are very nearly of the same dimensions, and can usually be combined.

[1] In like manner a stereoscope having lenses of too short focus can be corrected by means of a divergent auxiliary lens.

to regulate the apparent distance of the foreground,[1] according to a table on the instrument. The effort of accommodation imposed on the eyes is then equal to the effort of convergence when viewing the object direct.[2]

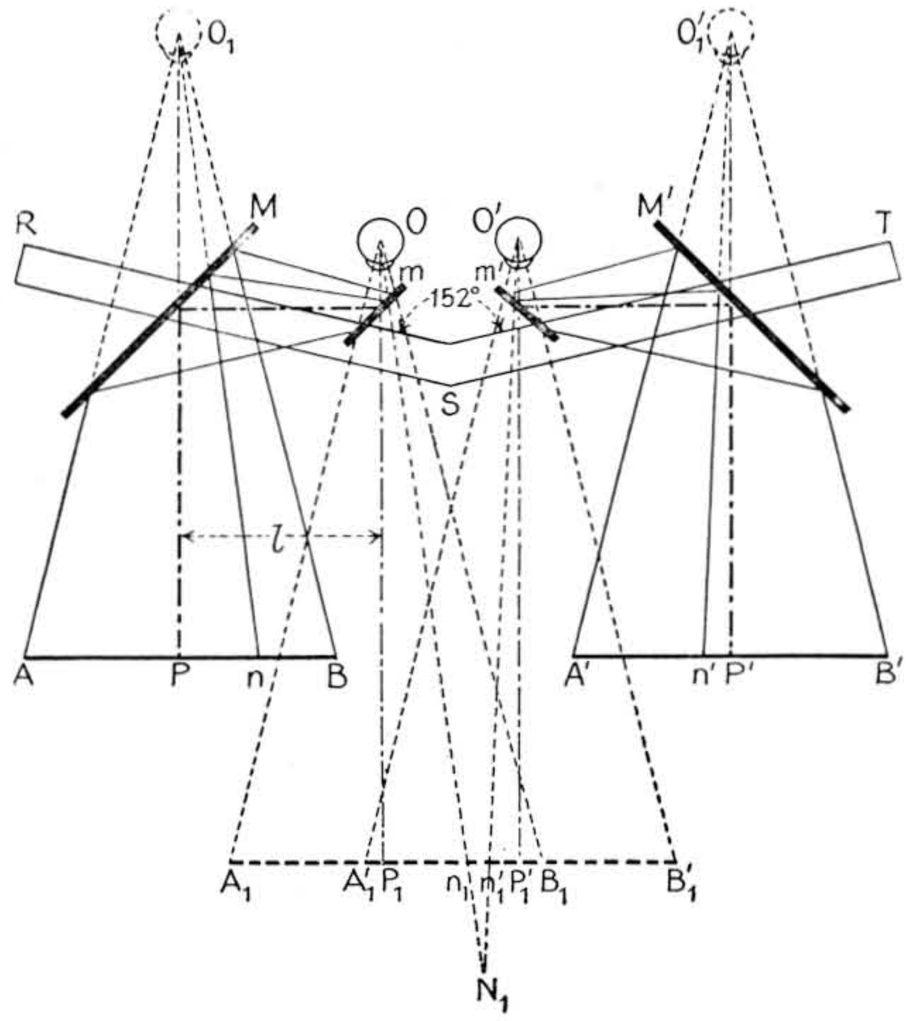

FIG. 211. TWO-MIRROR STEREOSCOPE
(Cazes)

830. Stereoscopes Having Two Reflectors in Front of One Eye. It is clear that one of the images of a stereoscopic pair can be viewed with the naked eye, and the other after reflection in two parallel mirrors suitably placed to enable fusion of the two images. This fusion is only possible on the condition that the path of the rays between the two reflecting surfaces is negligible compared with the distance of the stereogram from the eyes. Such instruments have been designed, notably by J. Duboscq (1857), for viewing two images placed one above the other, and by T. Brown (1895) for viewing two images side by side. On the same principle, F. Drouin (1896) has proposed the use of prisms of quadrilateral section (totally reflecting the light from two opposite faces), to be held in front of one eye for examining normal stereoscopic pairs or pseudoscopic pairs (not transposed). Such instruments have been used at various times for viewing stereoscopic projections.

831. One-mirror Stereoscopes. L. Pigeon (1904) made an instrument, somewhat analogous to the one described in 1849 by Brewster and in 1851 by H. W. Dove. Closed, this instrument appears like a book; when opened, the two side panels form an angle of about 140°; a median frame joined to the sides by linen or metal strips bisects the angle formed by the side panels. On one of the panels is placed at $A'B'$ (Fig. 212) a normal image of the right-hand picture, and on the other panel at AB is placed a reversed image of the left-hand picture. The two pictures can be joined by means of a paper or cloth hinge; the whole slides under a bridge in the lower edge of the bisecting panel. A small mirror M is fixed

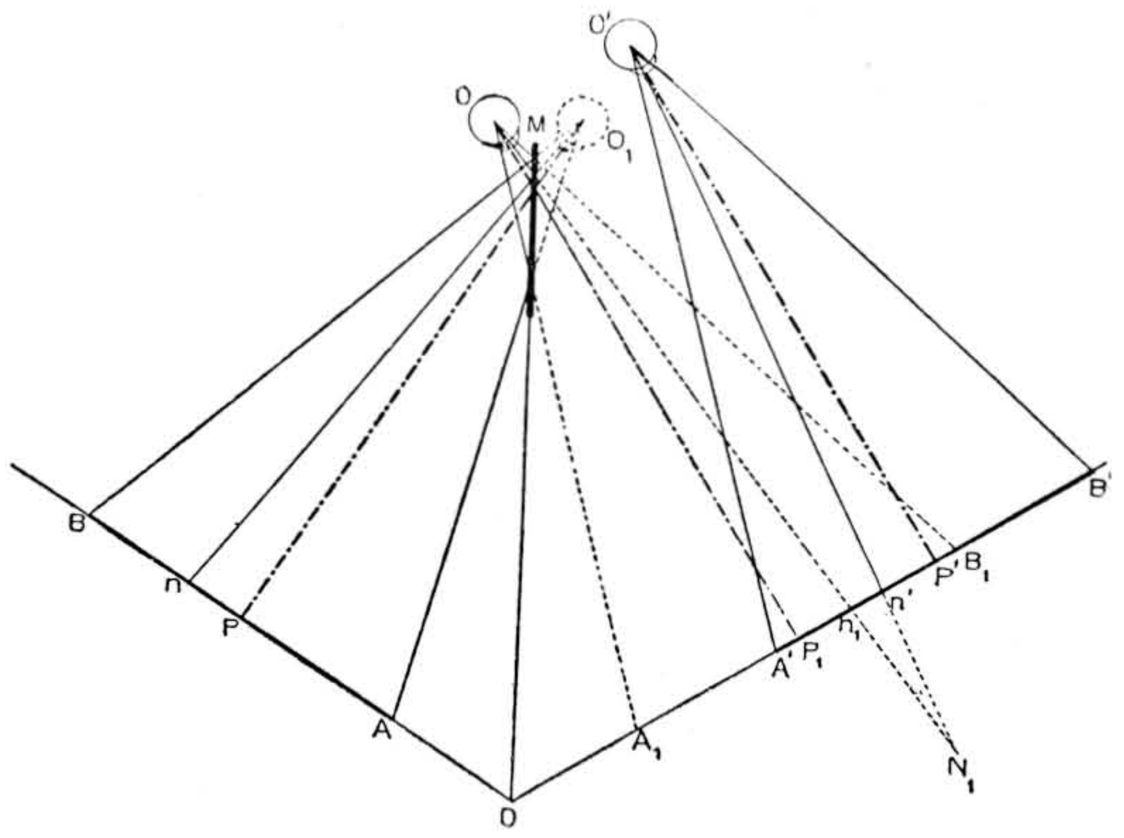

FIG. 212. SINGLE-MIRROR STEREOSCOPE
(Pigeon)

at the end of the bisecting panel DM in such a position that the left eye O can be placed very near to it; this eye sees at A_1B_1 the reflected image of AB, whilst the right eye O' sees $A'B'$ directly.[1]

[1] The geographical service of the French army (1923) worked out a combination of this stereoscope with a prism binocular, for examining aerial stereograms, giving a magnification of about 3·5. Combinations of one or other of these types of mirror stereoscopes with light boxes (negatoscopes) are used for examining stereoscopic radiographs.

[2] There is also, of this type, the stereoscope of C. Pulfrich (1904), carrying in front of each eye a prism of quadrilateral section, of which two adjoining faces reflect successively the pictures to be examined. The pictures are inclined at an angle of about 120°, their planes intersecting behind the observer.

[1] A curious case of stereoscopic viewing, using only a single reflection, is that of the "cube" of H. Swan (1863) in which one appears to see a person or a head and shoulders on a very small scale. Two small rectangular glass prisms having an angle of 40° are fastened together by their hypotenuses, but *without cementing*. The left eye placed facing one of the large faces sees

832. Stereoscopes with Reversing Prisms. Many devices have been worked out to produce a stereoscope for viewing stereograms printed without transposition (§ 816) from a pair taken on a single plate. Unfortunately, their use has not become general, but the principles employed will be briefly indicated.

A stereoscope suggested by Brewster in 1849 has two mirrors back to back in a plane perpendicular to that of the pictures examined, and situated half-way between the principal points. Each eye then sees the reversed image of its picture. The same inventor pointed out the possibility of reversing the images by means of a direct-vision total-reflecting prism in front of each eye.

The stereogram can be placed above or below the eyes and seen by means of a mirror held in front of the eyes (T. Brown, 1899), or placed in a plane parallel to the plane containing the two axes of vision, and seen by reflections at 45° (G. Balmitgère, 1909). In another model by the latter inventor the stereogram is placed in a vertical plane at about 45° to the axes of the eyepieces; two reflectors suitably placed produce virtual images normal to the direction of vision. The inequality in the two optical paths is then compensated by placing in the path of the more distant image a prism of appropriate thickness or an eyepiece constructed differently from that in the other path.

Stereoscopes with reversing eyepieces comprising total-reflecting prisms were worked out by Duboscq (1857) and by E. Colardeau (1911); in this model the prisms, producing three reflections, are placed between the eyepieces and the transparency to be examined; they are held in a movable carrier which can be removed from the field to allow of pseudoscopic examination of the same stereogram, or stereoscopic viewing of a transposed stereogram.

833. Anaglyphs. An anaglyph consists of the two pictures of a stereoscopic couple superimposed on the same support, the two pictures being printed in two complementary colours. The result, though meaningless to the naked eye, appears in relief if examined through a double eyepiece such that each eye sees through a filter of colour complementary to the colour of its corresponding image (L. Ducos du Hauron,[1] 1891).

The left-hand image is generally printed in blue-green or bluish-green, and the right-hand image in red, slightly orange. Under these conditions the left eye through a red filter sees the green image in black on a red ground, and cannot see the red image on this red ground; it therefore sees only its corresponding image. In the same way, the right eye through a green filter sees the red image in black on a green ground and cannot see the green image (or only very feebly).[2]

The reconstructed object therefore appears black on a ground of colour not far removed from the tint resulting from the mixture of coloured lights transmitted respectively by the two filters, but with momentary predominance of one colour or the other, according to the state of fatigue of the eyes.

When examining these anaglyphs with the two-colour eyepieces, those parts of the object the corresponding points of which are printed in coincidence appear to be in the plane of the anaglyph, the other elements of the reconstructed object appearing in front or behind this plane. The elements whose corresponding points have a separation equal to (or slightly smaller for easy viewing) the separation of the eyes will appear at infinity.

Anaglyphs have several advantages: they do not impose any limit to the dimensions of the pictures and only require for examination an instrument very easily and cheaply made by means of coloured gelatines (manufactured on the large scale) fixed in a light card, which can be punched out. After falling into disuse soon after their invention, anaglyphs have been employed to illustrate some scientific publications,[3]

directly the left-hand picture cemented to the opposite face, whilst the right eye, placed obliquely, only sees (by total internal reflection) the right-hand picture, which is stuck, after reversal of the image, on the side face of the prism, under the condition that the field of vision is very limited. The pictures are therefore very small.

[1] The priority of Ducos du Hauron has been questioned owing to some geometric drawings made by W. Rollmann (1853) in two complementary colours (yellow and blue). But the two images of the pair were side by side as in ordinary stereograms and not superimposed; their dimensions were thus limited to the separation of the eyes.

[2] Whilst red dyes and pigments may be obtained of very great purity of colour, transmitting or diffusing almost all the red light from the complex incident light, blue, blue-green, and green dyes and pigments always consist of blended tints (§ 8) reflecting or diffusing only a fraction of the radiations not absorbed, and consequently appearing grey when viewed through a filter of the same colour.

[3] Notably the applications made of anaglyphs to anatomy (M. d'Halluin, 1908), to geometry (H. Richard, 1912), to geographical and geological maps (H. Hubert, 1917), to astronomy (L. Gimpel and E. Touchet, 1924).

and since 1923 have received many applications (projections, catalogues, illustrated journals), the prints usually being made by a photo-mechanical process.

834. Parallax Stereograms. Imagine in front of a plate P (Fig. 213) in a parallel plane a grating T formed by opaque vertical and transparent bands, having the same width l over the entire length of the grid. Place at two points $O_g O_d$ separated by a distance b (mean separation of the eyes) and at a distance d from the plate, the two lenses fitted with reflectors for reversing each image and at the time of recording the images adjust the separation e between the grating and the plate to satisfy the relation $e = \frac{dl}{b}$. Under these conditions the bands $GG'G''$ . . . of the sensitive plate only receives light from the lens O_g, whilst the intermediate bands $DD'D''$ . . . only receive light from the lens O_d. The sensitive plate can thus only register half the total area of each of the images of the stereoscopic pair, but, if the bands are sufficiently narrow (about 125 to the inch), the discontinuity of each image will not be as conspicuous as the discontinuity of photo-mechanical reproductions (see for example the plates in Chapter XVII, obtained by means of cross-line screens of about 150 lines per inch).

After taking the photograph, the plate is developed and reversed and placed in the same position relative to the grating, the eyes of the observer being placed at O_g and O_d. Each eye will then only see the bands of image corresponding with it, and the observer will see the object in relief, without the use of any viewing instrument, since the grating is attached to the stereogram and is thus part of it.

This stereoscopic process, suggested in 1896 by A. Berthier, was put into practice by F. E. Ives in 1903, and perfected in 1906 by E. Estanave. These two authors have pointed out many other applications of the same principle.[1]

As in the case of anaglyphs, the elements of the object registered in coincidence appear in the plane of the stereogram, the other elements appearing either in front or behind, according to the relative positions of their corresponding points.

In practice, "parallax-stereograms" are not taken directly, as we have said, but printed successively from the negatives of an ordinary stereoscopic pair, the grating only being used in the reproduction by means of a triple-body camera; between the copying of the two pictures the lens is moved through a distance equal to the separation of the eyes, perpendicularly to the bands of the grating.

It may be noted that if the observer places the right eye at O_g and the left eye in the symmetrical position of O_d relative to O_g, he will see a pseudoscopic image. It would be the same

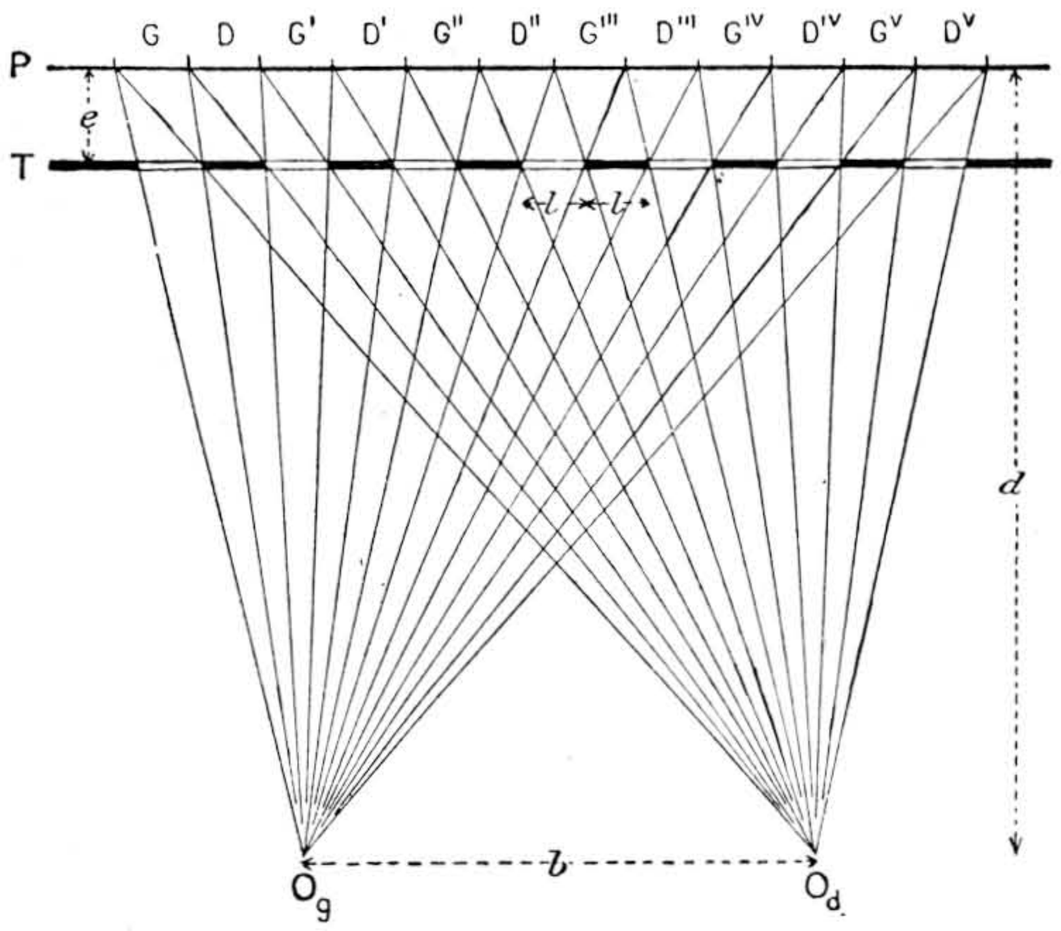

FIG. 213. PARALLAX STEREOGRAM

for an observer correctly placed relative to the image if the grating were displaced through a distance equal to the width of the open bands. In all intermediate positions, or if the observer is not at the required distance from the stereogram, each eye sees a little of each of the images, and the result is very confused.

835. Integral Photography. Under the name of integral photography, G. Lippmann in 1908 suggested a method the embodiment of which in practice was attempted in 1925 by E. Estanave.

A celluloid sheet of convenient thickness is embossed on its two faces with a large number of hemispherical projections, in such a way that the converging system formed by each element of the celluloid face when facing the subject gives an image on the emulsion covering the opposite hemispherical element. Without the use of any other optical system (except a mirror for the optical reversal of the image which is necessary, although not included in the original

[1] Notably "auto-stereograms" in colour on Autochrome plates (1907), the ordinary or stereoscopic changing pictures (1910), which show successively two distinct images, or two or three attitudes of the same person, by moving the picture relative to the observer (*living portraits*).

description), one obtains a very large number of minute images of the subject opposite which the film is exposed. After development, reversal, washing, and drying, the film examined from any viewpoint will show a complete image of the subject photographed, each point of the image (or, at least, each small element—almost a point) being supplied by one of the elementary images. Binocular vision of this gives the stereoscopic effect, with this peculiarity, that as the observer moves in front of the system, parts of the reconstructed object become masked and then unmasked by other parts, just as they would in moving about in front of the object itself, whereas in viewing a stereoscopic pair it is always the same objects in the background which are masked by the objects in the foreground, whatever the deformation of the reconstructed object, as the eyes are moved in front of the pair.

Prompted by this principle and by the parallax stereograms, C. W. Kanolt (1918) then G. Bessière (1925) and J. de Lassus St. Geniès (1932) have produced some very curious photographs, which, seen from almost any viewpoints, give a perfect stereoscopic sensation with relative displacements of the objects situated at various distances when the observer moved from side to side.

To obtain these peri-stereoscopic photographs the sensitive plate can be exposed, for example, a certain distance behind a vertical grating (the openings being 1/400 in. wide and the lines 1/64 in. wide). The lens, fitted with a reversing prism and a diaphragm in the form of a vertical slit, is given a sideway movement during exposure (in the case of same-size reproduction) or a rotation about an axis situated behind the plate when reproducing on a reduced scale, the position of the sharp image being just behind the plane of the plate. The plate thus records behind each opening of the grating, which acts as an elongated pinhole, a complete image of the object, retaining the vertical dimensions but compressing considerably the transverse dimensions. The lens only plays a small part in the formation of these anamorphoses, obtained in such a way that each point of the object corresponds to a single point in each elementary image. Once the negative is obtained, as many prints may be taken as are desired, and these are viewed by fixing a grating in front of them identical with the one used in making the negative.

836. Photo-stereo-synthesis. In spite of the fact that photo-stereo-synthesis (L. Lumière, 1920) does not involve any stereoscopic principles, the powerful sensation of relief given merits their inclusion among the various methods of stereoscopic photography.

The subject (generally a head and shoulders portrait) is photographed six times in such a way that the focus of each image is confined to a single plane of the subject.[1] The camera is moved nearer to the subject after each exposure, so that a new "section" is recorded on the same scale of reproduction. The six negatives thus obtained are printed very lightly on transparency plates (the sum of the six densities only just making up the density of a normal transparency). These plates are superimposed, their thicknesses representing (on the scale of the image) the thickness of each of the sections of the subject. The whole is illuminated from behind by a diffusing screen, and, on viewing from the one possible position, a sensation of relief is obtained, the part of each image in focus being the only effective part as far as the eyes are concerned.

This method has been applied with success to photomicrography (F. Bastin, 1921) and to radiography (E. Pohl, 1930).

(*d*) Taking Stereoscopic Negatives

837. Usual Stereoscopic Sizes. Stereoscopic apparatus, consisting of two coupled cameras, usually form the two images of the pair on a single plate or film.[2] The usual size of the first stereoscopic transparencies was 85 × 170 mm. (approximately $3\frac{1}{4} \times 6\frac{3}{4}$ in.), the two joined images each measuring about 75 × 75 mm. (3 × 3 in.), with lateral margins of 10 mm. ($\frac{2}{5}$ in.), corresponding to the position of the binding and title. These transparencies were printed from negatives taken on plates 8 × 16 cm. (approximately $3\frac{1}{8} \times 6\frac{1}{4}$ in.) or 9 × 18 cm. ($3\frac{1}{2} \times 7$ in.).

The International Congress of Photography held at Brussels in 1891 recommended the same size, 85 × 170 mm., with single images 66 × 70 mm. ($2\frac{5}{8} \times 2\frac{3}{4}$ in.), separated by a band of width 4 mm. ($\frac{1}{6}$ in.), leaving thus a distance of 70 mm. ($2\frac{3}{4}$ in.) between the principal points. This recommendation was never used in practice, and was changed by the Congress held at Brussels in 1910, where it was decided to allow "all sizes which can be held in a frame formed by two squares of side 80 mm. ($3\frac{1}{8}$ in.), placed

[1] This limiting depth of the field is obtained by suitable calculated movements of the lens and plate relative to the subject during the exposure of each negative.

[2] Formerly some cameras used two separate plates, automatically marked by an inscription on one of the images made by a cut in the shape of a figure in the frame limiting the extent of the picture.

side by side, it being assumed that homologous points of an object at infinity must not, under any circumstances, be more than 80 mm. ($3\frac{1}{8}$ in.) apart, and that a smaller distance is preferable."

However, negatives and transparencies of the same size are now usually used, the single images being very nearly square. The stereoscopic camera cannot be turned through a right angle for taking "vertical" and "horizontal" pictures; square images are therefore chosen to give the best results in both cases. Vertical and horizontal pictures may be obtained by masking the square negatives or by making suitable enlargements. The sizes most frequently used in modern stereoscopic cameras are given in the following table—

Nominal external size	Approximate dimensions of each picture	Space between the two images	Separation of principal points
7 × 13 cm. ($2\frac{3}{4} \times 5\frac{1}{8}$ in.)	64 × 60 mm. ($2\frac{1}{2} \times 2\frac{3}{8}$ in.)	4 mm. ($\frac{1}{8}$ in.)	65 mm. ($2\frac{9}{16}$ in.)
6 × 13 cm. ($2\frac{3}{8} \times 5\frac{1}{8}$ in.)	54 × 60 mm. ($2\frac{1}{8} \times 2\frac{3}{8}$ in.)	4 mm. ($\frac{1}{8}$ in)	65 mm. ($2\frac{9}{16}$ in.)
4·5 × 10·7 cm. ($1\frac{3}{4} \times 4\frac{1}{4}$ in.)	39 × 42 mm. ($1\frac{1}{2} \times 1\frac{5}{8}$ in.)	20 mm. ($1\frac{1}{2}$ in.)	63 mm. ($2\frac{1}{2}$ in.)

There are also excellent cameras of 9 × 12 cm. and 10 × 15 cm., generally fitted with three lenses, two for stereoscopic work and the other of longer focal length for a single image on the whole of the plate.

838. Stereoscopic Cameras Having Two Lenses. Stereoscopic cameras made to take the two stereoscopic photographs simultaneously are usually hand cameras of as varied designs as ordinary cameras (Chap. XIV), and are fitted with the same accessories.[1]

Since stereoscopes are not fitted with means for decentring the eyepieces, if one wishes the reconstructed object to be geometrically similar to the object itself the camera lenses used in making the negatives must never be decentred. It is to reduce the need of such decentring that lenses of very short focal length are frequently used. As, however, the negatives of a stereoscopic pair are often used separately for printing, enlarging, or projecting, that is to say, when decentring is of some importance, manufacturers make a compromise by fitting their cameras with a vertical movement of small range. Some makers of simple cameras, who, on account of price, cannot use wide angle lenses, consider that, for the majority of amateurs, conditions of geometric similarity are secondary to the advantages of decentring. Whereas, in ordinary photography, it is rarely necessary to ensure that the principal point corresponds to the horizon, their cameras are fitted with the lenses raised above the centre; if the photographer wishes to work from a high point he can use the camera upside down, thus getting a lowering of the lenses. The stereoscope corresponding to such a camera must obviously have its lenses decentred by the same amount.

The two lenses of a stereoscopic camera must be identical, so that they produce images in focus of the same dimensions and luminous intensity at the same distance.

Trouble would inevitably occur if the various adjustments were made on each lens separately: the focussing mechanism and the iris diaphragm are coupled by means of rods, except in the particular case when the separation of the lenses can be controlled.

The use of two separate shutters is avoided for the same reason, apart from the fact that they will be more expensive than a stereoscopic shutter with two openings.[1]

839. Several makers sell stereoscopic cameras which can be used for taking a single full-size image, thus obtaining an elongated view comparable to some extent with a panorama. In these cameras, generally called stereo-panoramic cameras, the centre partition is moved against the body when one lens is moved opposite the centre of the plate, either by sliding the lens board horizontally or by rotating an eccentric platform carrying one of the lenses. The normal lenses used for each image scarcely cover the considerable angle of field thus used unless greatly stopped down; the image obtained at the edges of the field is of poor definition and luminous intensity. For example, the lens of 3 in. focal length covers, on one of the images of a 6 × 13 cm. stereogram, an angle of 56°, whereas it must be capable of covering an angle of 93° to use the full size of the plate.

It is well known by users of such cameras that circumstances justifying the use of this panoramic arrangement are extremely rare.

840. Stereoscopic Cameras Avoiding the Need for Transposing the Negatives. The production

[1] However, for scientific or commercial applications of stereoscopy, hand cameras or studio cameras can be used if they are fitted with a separating "partition" similar to the bellows, fixed to two rods engaged in notches at the front and back of the camera, the partition being held on both sides by elastic fastenings to the ends of the rods.

[1] An American stereoscopic camera of the reflex type is fitted with a reversing stereoscope for viewing the images in relief on the ground glass, as suggested by F. Drouin (1893).

of stereoscopic images capable of being viewed directly in an ordinary stereoscope by reversal of the original images is a problem whose solution has been sought from the beginning of stereoscopic photography on Daguerreotype plates. It was solved by A. Claudet (1853) by fitting each of the lenses with a mirror or prism for optical reversal of each image.

Many attempts have been made since then to bring this type of camera into every-day use, notably those of J. Carpentier (1895), by means of right-angled prisms placed between the front and back components of the lens; by J. A. Tournier (1902), by means of reflectors inside the camera, projecting the images on to a roll film wound round the partition separating the two dark compartments; and by A. Daubresse (1902), by means of two reflectors inside the camera, throwing the images on a sensitive film placed between the lenses.

In spite of the advantage of such a camera in stereoscopic colour photography on mosaic colour plates, there being no need to cut the negatives, it has never been popular.

841. Cameras Fitted with Mirrors for Registering Simultaneously the Two Stereoscopic Images, Using Only One Lens. In a camera taking pictures at least $3\frac{1}{4} \times 4\frac{1}{4}$ in., by a suitable arrangement of mirrors in front of the lens, two separate images may be formed of the view as seen from the position of the images of the two half-apertures of the lens in the two mirrors.

Such a duplicating arrangement, consisting of two mirrors making a very obtuse angle with one another and having their joining line vertical and situated on the axis of the lens, was devised in 1853 by F. A. P. Barnard for stereoscopic photographs on Daguerreotype plates. Each of the two images of the pair is turned round by a single reflection of the incident rays. If used to obtain negatives to be finally printed by contact, this arrangement is open to the objection that the images are reversed as regards right and left.

A duplicating system, using two pairs of mirrors, recalling the stereoscope of Cazes (§ 829), was made in 1894 by T. Brown. Each of the images being reflected twice, the negative obtained is similar to an ordinary stereoscopic negative.

The mirrors of these duplicating systems are very delicate, since they require to be silvered on the surface to avoid the double reflections obtained with an ordinary mirror silvered on the back. Moreover, these mirrors reflect at most 90 per cent of the incident light (or 80 per cent after two reflections). Also the lens forms each image with only half its surface, thus reducing its " speed " to one-half its normal value.

These arrangements are not at all suitable if one wishes to conform to the best geometric conditions; the two half-pencils which are incident on the lens only have common regions if the two axes (virtual) are convergent.

842. Stands for Two Exposures in Rapid Succession. For stereoscopic photography of inanimate objects by means of two successive exposures with any camera, a number of arrangements have been put forward which may be fixed to a tripod and automatically ensure parallelism between the optical axes in the two positions and the desired separation between the two view-points.

The following arrangements, among others, have been used: A board with stops indicating the two positions of the camera; a board with a carriage running on guides between fixed or adjustable stops, the camera being fixed to the carriage; a board to which is secured by means of four movable rods another board, the rods and boards forming two parallelograms; this ensures parallelism in the extreme positions of the movable board.

843. Stereoscopic Photography, Using a Large Base. There are two cases to be considered, the study of a distant object of small depth, but no objects situated at intermediate distances, and the photography to the best advantage of a group of objects situated at all distances from the base and partially obscuring each other from view. As typical examples of the two respective cases may be mentioned: (1) vertical stereoscopic photography, from an aeroplane flying at great altitude, of an expanse of country, or the plan of a works, and (2) the stereoscopic photography of a landscape from ground stations.

In all cases the camera must be of slightly greater size than the size of the images required, so that they may be trimmed to avoid any errors of orientation. When extreme accuracy is not necessary (otherwise the camera must be mounted as a theodolite), the parallelism of the two positions of the optical axis is obtained with sufficient approximation by observing the image of some object at infinity and bringing it to the same point on the ground glass, or on a reference mark on the finder (replaced, if necessary, by a telescope with cross wires, or by a rifle sight).[1]

[1] To avoid displacement of the clouds in a landscape by wind between the two exposures, giving the illusion of clouds nearer than the landscape, it is best to take the first photograph from the side from which the wind

844. Considering the first case mentioned above, if we are to place the eyes opposite the principal points of the pair—the condition necessary to avoid distortion of the reconstructed object (§ 822)—the separation of the two stations must be chosen so that it bears the same relation to the mean distance of the object as the separation of the eyes bears to the principal distance (L. P. Clerc, 1917). In other words, if B is the length of the base (distance between the two stations), D the mean distance of the object from the base, b the separation of the eyes, and d the principal distance of the images of the pair (practically equal to the focal lengths of the lenses in the case of a distant object), the length B must be chosen to satisfy the relation $\frac{B}{D} = \frac{b}{d}$

It is for this reason that stereoscopic pairs taken vertically from the air are given a separation equal to a quarter of the altitude if the lens used has a focal length of about 10 in., i.e. four times the separation of the eyes.

845. The rule given above is obviously useless in the case of a group of objects of considerable depth; we can no longer talk about the distance of the object, as it varies considerably from one part to another.

If a series of photographs are taken of open country from a high terrace, the camera being moved perpendicular to the direction of vision between each exposure, thus obtaining stereoscopic pairs of increasing separation from, say, 9 in. to 10 yd., the sensation of relief obtained in viewing the various stereograms obtained becomes more and more marked as the base is increased. But, when the stations are more than a certain distance apart, it becomes more and more difficult to make the foregrounds of the images coincide. If the base is increased still farther, fusion of the images becomes impossible even in the distance, the eyes being attracted by the discordance of the foreground, however hard the observer may try to neglect it.

In determining the separation of the stations,

comes, and to reach the other station, previously decided upon, as quickly as possible.

When photographing in sunny weather from two stations successively with an appreciable interval of time intervening, the displacement of the shadows that occurs between the two exposures gives on stereoscopic examination the sensation of black surfaces rising above the ground as their distance increases from the object projecting them. To prevent this it has been suggested that the first station taken should be the one which, relatively to the other, is in the direction of the sun.

These two recommendations may, however, prove incompatible.

both the distance of the foreground and the more remote parts of the subject must be taken into account. It is easily seen that for a certain distance of remote parts the base can be made larger the greater the distance of the foreground, with consequent greater relief in the remote parts.

The relation the foreground bears to the distant parts greatly influences the length of base it is possible to use. For instance, in a photograph taken from a cliff over a valley, the various object planes range in increasing distances up to the horizon or to the limit of the remote part without any object in the foreground masking an object in the distance. Under these conditions, if the result is examined stereoscopically, the eyes can view successively the various planes, and are not influenced by quite a considerable variation of separation of corresponding points. If, on the contrary, the photograph is taken, from the ground level, of a bush or tree at about 20 yd. from the camera, standing out against a hillside which forms a background, the maximum variation of separation of corresponding points appears between adjacent points.

Experience shows that in the case of a stereoscopic pair taken looking down on the subject, the eyes can stand a separation of homologous points about five times as great as in the case of horizontal views.

Most observers can endure a variation of separation of homologous points equal to 1/10th of the distance at which they are examined in the case of bird's-eye views, and of 1/50th of this distance in the case of horizontal views.

If a stereogram is viewed under normal conditions, the eyes occupying the respective viewpoints of the two perspectives, the viewing distance is equal to the focal length F of the lens used in taking the photographs, and if the foreground and distance are respectively at distances D and D' from the base, the maximum separation B of the stations is given by the following equations[1]—

$$\text{Bird's-eye views} \quad B = \frac{DD'}{10\,(D'-D)}$$

$$\text{Horizontal views} \quad B = \frac{DD'}{50\,(D'-D)}$$

[1] The variation of separation $e - e'$ of the homologous points (§ 819) is actually equal to

$$e - e' = BF\left(\frac{1}{D} - \frac{1}{D'}\right) \quad \text{or} \quad B = \frac{(e-e')\,DD'}{F\,(D'-D)}$$

If then $(e - e')$ is given the value $F/10$ or $F/50$ it is easily seen (L. P. Clerc, 1917) that

$$B = \frac{DD'}{10\,(D'-D)} \quad \text{or} \quad B = \frac{DD'}{50\,(D'-D)}$$

We thus obtain by other means, in the case of horizontal views, the rule given in 1895 by L. Cazes.

Frequently when one does not wish to make the reconstructed object exactly similar to the object itself, the stereoscope used for viewing has eyepieces of focal length f differing from the focal lengths of the camera lenses used in taking the photographs (photographs taken by means of a telephoto lens, and viewed in a stereoscope of short focus). In such cases the variation of separation of corresponding points must be reduced to the focal distance f of the eyepieces, and the equations giving the maximum separation of the stations become—

$$\text{Bird's-eye views} \quad B = \frac{f}{10F}\,\frac{DD'}{(D'-D)}$$

$$\text{Horizontal views} \quad B = \frac{f}{50F}\,\frac{DD'}{(D'-D')}$$

For example, in the case of a bird's-eye panorama in which the foreground is 2 kilometres away and the background 10 kilometres, the photographs being taken with a lens of 26 cm. focal length, and examined with eyepieces of 12 cm. focal length, the separation of the stations can reach 115 metres,[1] in which case the extent of the neutral zones, calculated as in § 824, have the following values according to the distance of the background—

Distance at . . .	10,000	5,000	2,500 metres
Corresponding extent of neutral zone . .	196	50	12 metres

In the case of a horizontal view in which the foreground is situated at 20 metres and the background at 10 kilometres, the photographs being taken with the same lenses and viewed with the same eyepieces as in the previous example, the separation of the stations must not exceed 4·86 m.,[2] the neutral zones assuming considerable dimensions—

Distance at . . .	10,000	5,000	2,500 metres
Corresponding extent of neutral zone . .	3,225	962	266 metres

The advantage of choosing a high station to eliminate any near foreground is therefore obvious.

[1] $B = \frac{0{\cdot}12}{10 \times 0{\cdot}26} \times \frac{2000 \times 10{,}000}{8000} = \frac{3000}{26} = 115$ m.

[2] $B = \frac{0{\cdot}12}{50 \times 0{\cdot}26} = \frac{20 \times 10{,}000}{9{,}880} = \frac{4800}{988} = 4{\cdot}86$ m.

In the special case when the view extends to the horizon, $1/D' = O$, and the equations become respectively

$$B = \frac{fD}{10F} \text{ and } B = \frac{fD}{50F}$$

846. Stereoscopic Photography of Small Objects. If the reconstructed object is to be exactly similar to the object itself, the first condition to observe is to choose the focal length F of the taking lens and the magnification n such that the principal distance $F(n+1)$ of the perspectives is equal to the focal length of the eyepieces of the viewing stereoscope. This condition is often neglected.[1]

When one attempts, by means of a two-lens camera, to take stereoscopic photographs of near objects, as one approaches the objects their images on the ground glass separate and finally go out of the field. One is then forced to reduce the separation of the lenses, which is possible only with some special cameras,[2] and is then limited by the nearness of the object. Two exposures can, of course, be taken, moving the camera a suitable distance between them (or, sometimes more simply, by giving a shift of equal amplitude to the object itself).

847. When the depth of the object photographed is only a small fraction of its distance from the lens, and when the stereogram is to be viewed under normal conditions[3] (the eyes occu-

[1] In order to photograph small objects same size by means of a camera not having sufficient extension, the two lenses may be used for taking each perspective, one acting as an auxiliary lens. This lens coupling can be effected by means of a cylindrical sleeve sliding freely on the lens hoods.

[2] Notably a camera made to the design of W. Scheffer (1907) for stereoscopic photography of insects and other natural history preparations on any scale (same size). The separation of the lenses was automatically controlled by the movement of the lens carrier, which moved for focussing in such a way that the separation of the lenses was inversely proportional to the extension.

[3] The photographs being taken on the scale of $1/n$ with objectives of focal length F, thus having a principal distance equal to $F(n+1)$, if the stereogram is viewed with eyepieces having a focal length f, approximate compensation of the abnormal circumstances of viewing is obtained if the separation of the two photographing points is made equal to B, where—

$$B = \frac{2{\cdot}5\,(n+1)F}{nf}$$

all measurements being made in inches.

We have had occasion to verify this rule experimentally in taking a series of stereograms at increasing separations of a map in relief. More than a hundred people who viewed these stereograms and compared

pying the points of view of the two perspectives), the separation of the positions of the lens can be obtained by applying the rule given in § 844 for long-distance stereoscopy.

In particular, if the object is photographed natural size, the separation of the lenses must be equal to the mean separation of the eyes. It will also be necessary to view the stereogram with eyepieces of at least 10 in. focal length (which means that for perfect reproduction the object must be photographed at this same distance from the lenses), the eyes being unable to converge on a nearer point without fatigue. Further, an ordinary stereoscopic camera cannot be used under these conditions, as it forms an image of only half the object in each field. One is therefore often led, in same-size stereoscopic photography of small objects of little depth, to reduce the separation of the lenses, thus sacrificing the similarity between object and reproduced object, or to make the optical axes converge towards the object[1] in order to bring the two images to the centres of the two halves of the plate, although this causes serious deformations in the case of an object of appreciable thickness (§ 821). It is therefore necessary, at the same time as the axes are made to converge (exaggerated relief), to reduce the separation of the two positions (reducing relief and thus partially compensating for the effect of the convergence of the axes).

The general rule is applied much more easily in the case of objects photographed on an enlarged scale; for example, to obtain stereograms representing an object of small depth under a magnification of 10 times, no difficulties present themselves either in the taking or viewing provided one moves either the camera or object parallel to itself between exposures a distance equal to 1/10th the separation of the eyes, viz. $\frac{1}{4}$ in.

them with the original relief chose, as the one most like the original, the stereogram taken with a separation of stations equal to that calculated from the above formula.

[1] The same result is obtained by rotating the object between exposures about a vertical axis cutting the optical axis, remembering to turn the source of light through the same angle about the same axis to avoid differences of illumination in the two photographs. Generally the total amplitude of this rotation is about 2° to 4° according to the distance of the object from the base.

It is worthy of note that the use of prism attachments mounted on the lenses of a stereoscope camera has been suggested, so as to ensure convergence of the axes, thus permitting relatively near objects to be photographed.

848. For small objects of appreciable thickness, the best results are obtained by applying the formula given in § 845 for horizontal views, but replacing the focal distance F by the principal distance.

For example, suppose we photograph an object 2 cm. deep with a lens of 12 cm. focal length placed in front of a perfectly uniform background not located in the stereoscopic viewing. The middle plane of the object is focussed under conditions giving a magnification of 3 times. The ultra-nodal distance of the plane focussed on is thus 16 cm., viz., 15 and 17 cm. for the distances of front and rear planes, while the ultra-nodal distance of the sensitive plate, i.e. the principal distance, is 48 cm. The optimum separation of the two positions is then given by—

$$B = \frac{12}{50 \times 48} \times \frac{15 \times 17}{(17 - 15)} = \frac{255}{400} = 0{\cdot}64 \text{ cm.}$$

The camera or object is therefore to be moved 6·4 mm. between the two exposures.

(*e*) Printing and Mounting Stereograms

849. Masking the Pictures. An important factor in the mounting of stereograms is the choice of suitable frames (masks, trimming, or windows limiting the field in the case of stereoscopes of box form). The frames of the two elements of a pair must be equal; under these conditions they are seen stereoscopically as rectangles located in space.

If the stereogram represents a landscape, a monument, or any other object of large dimensions, the frames should be placed in such positions relative to the photograph that they give the illusion of seeing the object through a window. The distance between corresponding sides of the two frames must be about 1/25th in. less than the separation of corresponding points of the foreground. In other words, as in looking through a window, one must see a little more of the right of the subject with the left eye, and a little more of the left of the subject with the right eye.

On the other hand, if the stereogram represents some small object against a background, e.g. a medal resting on a mount, it is desirable to locate the frame in the plane of the background, the object then appearing in front of the frame, the corresponding sides of which must have a separation equal to that of corresponding points of the background.

In order to be able to effect these localizations

it is necessary to know the dimensions and relative positions of the openings of the stereoscope to be used (small variations of this type occur between stereoscopes of different makes). To find this, a card of considerable length and about 1/25th in. narrower than the smaller dimension of the normal size (59 mm., for example, for a stereoscope 6 × 13 cm.) is placed in the grooves; on this card are traced in pencil the boundaries of the openings of the stereoscope and the length of card necessary for mounting prints, allowing about ½ in. extra to catch hold of. It is well also to mark the boundaries of a plate of the corresponding size (Fig. 214).

850. Printing. The stereoscopic effect is more realistic when viewing transparencies than when viewing prints, and the former are more popular for private collections. Stereograms on glossy paper are often used for collections of scientific or technical interest when cost is a primary consideration. Moreover, they lend themselves to transport by post, etc., with greater safety.

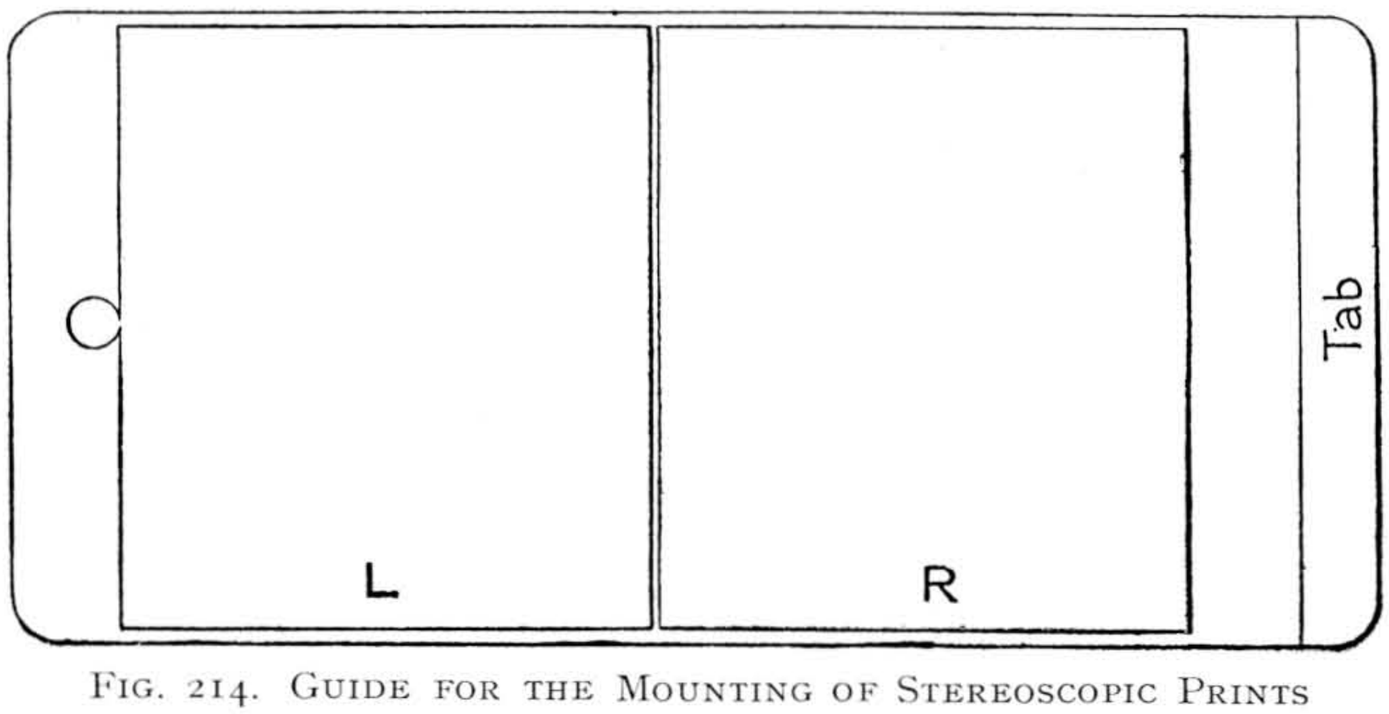

FIG. 214. GUIDE FOR THE MOUNTING OF STEREOSCOPIC PRINTS

When dealing with large sizes only, stereograms printed on paper are practicable, and the printing is often done by photo-mechanical processes.[1]

The two images of each pair being generally exposed separately and developed together, it is necessary to take precautions to give equal exposures to the two prints. When, however, the same transparency is to be used alternately for stereoscopic viewing and projection, it is advantageous to give the image to be used for projection a little less density (by shorter exposure) than the other; even a marked difference of density scarcely affects stereoscopic viewing. At one time, when papers of different gradations were not available, some workers adjusted the exposures of the two prints so that one of them showed the light tones to best advantage and the other the shadows.

Since the sensation of relief results from small differences of position of corresponding points of the two pictures, any circumstances affecting the sharpness of the prints will impair the degree of relief. It is therefore necessary in printing transparencies by contact to take all the precautions recommended in § 567.

Prints of excessive contrast, when viewed stereoscopically, readily give a "snow effect." This effect may be lessened by tinting the entire print, e.g. very light yellow, to give the effect of sunshine.

851. Printing Stereoscopic Transparencies. When printing in large numbers, it is usual to make a negative allowing both images to be printed at the same time, either by cutting and re-assembling the original negative or by making a duplicate negative from a suitable positive.

For printing in small numbers the transposition may be done automatically by means of a triple-body camera fitted with a median partition and two lenses (A. Bertsch, 1860), each of which reproduces one of the images of the pair and reverses it laterally, thus compensating for the reversal in the taking camera. Various devices have been made to adapt the stereoscopic camera to this purpose. In the specially constructed instruments the two lenses are generally mounted with a means of varying the separation, so as to allow of suitable placing of the images on the positive plate, this adjustment being done by examining the projected negative image on the ground glass.

The printing of stereoscopic transparencies is usually done by contact[1] in a transposing frame

[1] Collotype, with its irregular grain, is generally preferable to half-tone, with its pronounced geometrical pattern. In printing stereoscopic pairs in half-tone, it is advantageous to arrange the two directions of the screen at 30° to one another, and so render the pattern less obvious.

[1] A stereoscopic pair giving only a very slight effect of relief, owing to the choice of a base too short in comparison with the distance of the subject, may be considerably improved by enlargement provided there is no near foreground. A rigorous geometrical reconstruction is not, however, obtained.

requiring two exposures. These frames comprise an exposure opening and grooves in which to slide the negative and positive plate. Stops hold the two plates in the positions indicated in Fig. 205, the left-hand image then being printed on the left half of the positive plate and the right-hand image on the right half of the plate.

The types of transposing frames usually found on the market are made for average results, and satisfy most requirements. To produce transparencies adapted exactly to a certain stereoscope it is necessary to obtain an adjustable transposing frame, or to make a suitable one. Their construction is easy if the principles given below are observed (A. Marteau, 1902).

For a long time it was usual to bind up transparencies by a piece of plain glass after the manner of lantern slides, first masking and titling the subject. The introduction of automatic stereoscopes and the popularity of small sizes, which would be much reduced by binding, has led to the abandonment of this procedure; the title is usually written in ink on one of the transparent parts (margin, or gap between the two images). It is, however, advisable to protect the film of the transparency with varnish.

852. Construction of a Transposing Frame. Procure three sheets of Bristol board which, suitably cut, are placed one on top of the other in a printing frame of convenient size, and form the transposing frame represented in Fig. 215.[1] Cut out of the cards three equal rectangles of length greater (by about $2\frac{1}{2}$ in.) than twice the length of the positive plates to be used, and of width greater than the width of the plates, by about 4 in. Draw carefully the two axes xx', yy' of the rectangles from which measurements of the various apertures will be taken.

The centre card (represented by vertical shading) is sandwiched between the other two, and its thickness must be at most equal to the thinnest negative to be printed; if not, it will prevent contact between the negative and positive plate. In this card cut an opening *abcd* to receive the negatives with the least possible play.

[1] The figure is drawn practically to scale for the case of a 6 × 13 cm. negative to be printed on to a 7 × 13 cm. transparency plate. If the negative is of greater dimensions than the positive plate, the top card, forming the guide, will only be fixed to the others along one of the longer sides so that it may be lifted for inserting the negative.

The card *abdc*, Fig. 215, which after mounting will be in contact with the glass of the printing frame, serves as a mask. In it cut two openings *efgh*, *ijkl*; this card must be very thin; stout paper may be used instead of card. If the individual negative pictures are larger than the openings in the frame of the stereoscope, these masks are cut about 1/25th in. larger all round than the stereoscope masks, so that the openings are well filled by the pictures. If, on the other hand, the printing is done from a negative of smaller size, this mask is cut, leaving openings about 1/25th in. less in each dimension than the card forming the plate holder. In like manner, it will be necessary to provide each transparency

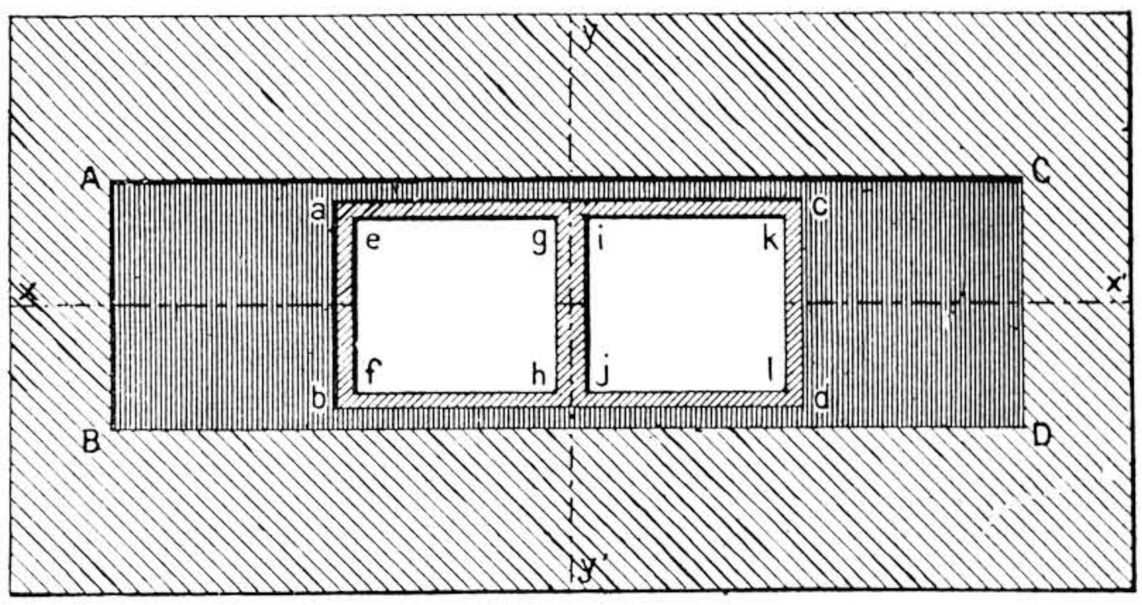

FIG. 215. STEREOSCOPIC TRANSPOSING FRAME

with a mask cutting off the plain glass at the margin, or at least to fit the stereoscope with a temporary mask.

The distance of *ef* from *ab* is measured on several negatives, and then the opening *efgh* cut accordingly. To carry out the recommendation made in § 849 for landscapes and large subjects, the distance between the corresponding sides *ef*, *ij* of the two openings of the mask must be about 1/25th in. *greater* than the distance between corresponding points of the foreground as measured on several negatives (greater, not smaller, as in the finished stereogram, by reason of the transposition). This fixes the position of the second opening *ijkl* equal to *efgh* and having its horizontal sides exact continuations of those of *efgh*. The card forming the negative holder is then glued, or fixed by any other appropriate means, on to the masking card.[1]

[1] To make the best of stereoscopic negatives which, by mistake, were taken with an inclined base (camera tilted laterally during exposure), a similar transposing frame may be made. The negative holder, instead of being fixed, is cut in two, and the two halves centred on the openings of the mask such that the lines joining corresponding points are horizontal, the negative being temporarily fixed by gummed strips.

The cutting of the opening *ABCD* in the upper card (represented by the spaced shading), which forms the slide for the positive plate, is best done by laying on it the card already made (Fig. 214) and tracing the position of the openings of the stereoscope (§ 849). To do this, the guide card is placed on the frame so that the rectangle *D* is centred over the opening *ijkl* and a trace of the guide on the negative carrier is made, thus determining the side *CD* of the necessary opening in the upper card and the beginnings of the sides *AC* and *BD*. The side *AB* will be fixed by the condition that the distances of *cd* from *CD* and *ab* from *AB* must be equal. It only remains to cut this third card on which has been drawn the rectangle *ABCD*, and to glue it on the other two in the position indicated by the lines.

853. Stereoscopic Prints on Paper. Stereoscopic prints are best trimmed with the help of a trimming plate cut from the glass of a waste negative of size about 1/25th in. greater than that of the opening of the stereoscope.[1] When the print is taken from a pair of negatives on a single plate,[2] the horizontal sides are cut first with a trimming plate of sufficient length and of width slightly greater than the height of the openings of the stereoscope, on which a squared pattern has been traced,[3] having one direction parallel to the length of the stereogram. It is then easy, if the camera was correctly levelled when taking the views, to make the cuts correspond to the vertical lines of the subject (monuments, interiors) and to the horizontal lines joining corresponding points of the pictures (in the case of photographs taken with an inclined camera, the two pictures had best be trimmed separately). The trimming of the vertical sides is then done with a plate slightly wider than the openings of the stereoscope. It is convenient to have this plate marked with numbered vertical lines facilitating its adjustment. In order that the framing should play the part of a window for the foreground, the plate is placed with one of the vertical lines on an easily identified reference point in the foreground of the left-hand picture, and the plate is next placed on the right-hand picture, so that the corresponding reference point is on the right of the vertical ruling.

The positions of each of the prints on the mount are marked with a slip of card or thin metal on which has been drawn or traced the transverse boundaries based on the guide card (Fig. 214), but remembering that the width of the prints should be slightly greater than that of the openings of the stereoscope. It is very important, before finally attaching the prints to the mounts, to make sure that the lines joining corresponding points are parallel to the long sides of the card. This can easily be verified by means of the trimming plate already used for cutting the horizontal sides.

For rapid mounting, the wet prints may be applied gelatine side down to a piece of glass the same size as the transparencies. To obtain the correct positions the glass is placed on the guide card (Fig. 214). The prints being seen through their backs, the left-hand image will be on the right, so that when seen through the glass the two occupy their correct positions.

854. When the photographs have been taken on separate plates, and particularly in the case of large negatives taken from two distant stations, it is first necessary to identify them as already described. If it is desired to make the reconstructed object appear in front of the frame, the two prints can be trimmed simultaneously by making their backgrounds coincide while trimming. Otherwise, trimming in this position must be limited to the horizontal sides, the vertical sides being cut as described above.[1]

We cannot go into all the special precautions necessary in mounting stereoscopic prints of large size for mirror stereoscopes; these precautions will suggest themselves after some experiments with the particular stereoscope to be used. The procedure will be understood from what has already been said.

[1] For mounting photographs smaller than the size for which the stereoscope is intended it is better to use black or very dark cards. The card may obviously be of any colour if it does not appear in the field of view.

[2] Before trimming, take care to mark the two prints with a soft pencil on their backs with the letters L and R to avoid confusion when mounting. If this precaution has been omitted the two prints may be identified as follows: Lay one print on top of the other and hold them up to the sun or a powerful source of light, their film sides facing the observer. Adjust them until the backgrounds coincide; then the foreground of the left-hand picture extends beyond the right of that of the right-hand picture.

[3] These lines may be made by drawing on an undeveloped fixed plate.

[1] In the case of vertical aerial photographs, consideration of the displacements of the backgrounds and foregrounds is not sufficient to differentiate the two photographs. The left-hand picture is generally the one of which the principal point is nearest the left-hand side (except in the case of views taken with axes accidentally converging to a point above the ground). In this case horizontal cuts must be made parallel to the line joining the respective principal points of the two images.

855. Stereoscopic Transparencies from Separate Negatives. If the negatives have been taken with a stereoscopic camera using two separate plates, it is easy to construct a transposing frame similar to that described in § 852, but, in place of the single negative carrier *abcd*, two separate negative carriers must be made, sufficiently separated from one another to give the necessary rigidity to the card situated between the two openings. This increases the separation between the openings and the length of the slide *ABCD* for the positive plate.

For printing large stereoscopic pairs on a single transparency such a transposing frame would be very cumbersome. Moreover, when the negatives have been taken from separate stations, the backgrounds do not generally appear in the same position on the two negatives, and such a transposing frame can only be used for pairs of negatives whose backgrounds are in the same position relative to the openings.

The following method (L. P. Clerc, 1917) works very well. Two card frames (Fig. 216), not thicker than the thinnest positive plate, are cut with openings of the normal size of the positive plates. The two frames are marked with the letters L and R, and also by means of notches cut on the two sides of the right angle by which the plates can be lifted.

A stereoscopic pair, printed on paper from the desired negatives is mounted on a plate of glass of the same dimensions as the transparencies, the prints being attached to the glass by their backs. Before the mountant is dry this provisional stereogram is viewed in the stereoscope to make sure it is mounted correctly.

After drying this model, the right-hand negative is applied against the print, in a good light, and the two right-hand images caused to coincide.[1] Register having been obtained, it is carefully maintained, and the whole placed on the edge of a table, the negative underneath. Now pass the left hand through the opening of the right-hand frame to press the model stereogram against the negative, and place the frame round the model with the two sides of the angle marked R in contact with the lower right-hand corner of the model. Hold with the right hand the combined negative and frame, and, removing the model, turn it over on the table, frame underneath. Fix the negative on the frame with thick rubber solution or strips of gummed paper; do not wet the parts of the strips which touch the gelatine film of the negative. Whilst these strips are drying, proceed with the same registration of the left-hand negative, then verify that there has been no appreciable displacement of the frames by placing the model stereogram in each one in turn, placing it against the lettered angle; if there has been any movement it must be rectified. Whilst the model is in place, mask on each frame the area corresponding to the other negative by means of a piece of black paper (held in place with gummed strips), of

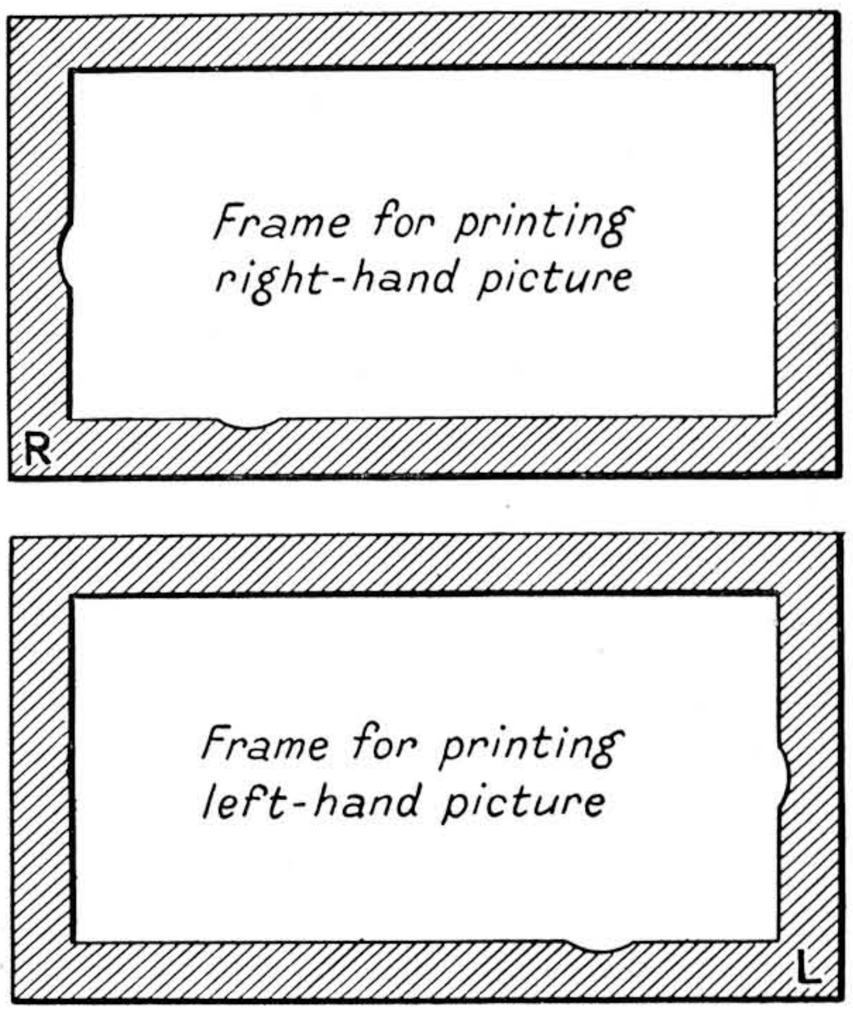

FIG. 216. TRANSPOSING MASKS
(Clerc)

which the free edge must coincide with the line of junction of the two prints of the model.

The whole operation, longer to write than to carry out, takes hardly a quarter of an hour from the time the model is ready for use.

The printing can then be done in a single printing frame or in two printing frames, taking care to place the negatives in corresponding positions, e.g. guiding angles towards the operator. The positive plate will be exposed to light behind each of the two negatives, placing it each time against the register angle. In these circumstances the transparency will be made with the pair of images in the same positions as in the model.

856. Printing of Anaglyphs. Anaglyphs on paper are usually produced by photo-mechanical methods, collotype being convenient for small editions and half-tone for large numbers.

[1] If, owing to stretching of the paper, coincidence cannot be obtained over the whole image, adjustment is made over the central region.

Originals sent to the collotype or photo-engraving firm must be very carefully masked, according to the directions set out in § 849. In the case of half-tone reproductions it is well to instruct the engraver to angle the screen as is usually done in three-colour block-making for the red and blue negatives so as to avoid any moirée effect (which would disappear when examined through bi-coloured glasses). If the frames have been suitably placed, the printing must be done so as to ensure their coincidence.

For the production of anaglyph transparencies for direct viewing or projection, the necessary precautions must be taken that the two images, printed on separate plates, occupy the correct positions relative to one another when placed film to film—the edges of the plates coinciding. The blue image may, for example, be made by prussian blue toning (§§ 598 and 601), or by dye-toning with methylene blue made slightly greenish by methylene green or malachite green; the red image may be made by imbibition without washing out (§ 675) by means of ammoniacal carmine, the image printed from a positive being thus reversed.

The red image may also be made by the same methods as the blue, but using a thin film.[1]

(*f*) Stereoscopic Projection

857. Classification of the Various Methods. The various known methods of stereoscopic projection may be classified as follows—

(A) The images are projected one on the other and are selected—

(1) By alternately cutting out the two projected beams, with synchronized cut-out of the individual viewing apparatus.

(2) By their colour, each observer being supplied with an appropriate bi-coloured pair of spectacles.

(3) By polarization in different directions of the light in each of the projecting beams, each observer being provided with an analysing apparatus.

(4) By purely geometric means of less general application, stereoscopic vision only being possible to a single observer, or several observers in certain definite positions.

[1] For making anaglyphs films have been placed on the market with a positive emulsion giving images of weak contrast and without a gelatine coating on the back. These are exposed under a specially prepared transparency (§ 570), and after development they are bleached in the bromoil bleaching bath (§ 699), rinsed, fixed, washed, dried and dyed (§ 675). The dye fixes on the non-hardened gelatine and a positive image is obtained.

(B) The images are projected side by side, the enlarged stereoscopic pair on the screen being examined—

(1) By a mirror stereoscope.
(2) By special binoculars.
(3) By prisms.
(4) By a mask permitting each eye to see only one image.

858. Alternating Viewing. This method, sometimes called strobo-stereoscopy, was described in 1858 by J. Ch. d'Almeida. The two images are thrown by two projectors illuminated alternately with a frequency of about 15 exposures per second for each image. In front of each observer a system of two eye-holes or two eye-pieces is provided with shutters synchronized with those of the projectors, so that the right eye sees only the right image and the left eye the left image, with persistence of vision for both eyes.

Nothing appears to show that these projectors were actually made by d'Almeida. The application of this principle to stereoscopic cinematography (with the possibility of using only a single projector, the film consisting of alternate right and left-hand pictures of the same scene) has been patented many times since the beginning of cinematography, notably by Dr. Doyen (1900), by Grivolas (1901), by E. Reynaud (1902), and by C. Schmidt and C. Dupuis (1903); the latter ran a cine-stereoscopic show for several months in Rue d'Hauteville, Paris; each spectator was provided with a species of opera glass attached to his chair by electric wires, which controlled an electro-magnetic shutter.[1]

859. Projection in Two Complementary Colours. In the same paper in which the above process was suggested, d'Almeida wrote of a method of stereoscopic projection, using projecting beams of red and green for the two images of the pair. By placing in front of the eyes red and green glasses complementary to each other, the red beam is extinguished by the green filter so that the eye, seeing through the green filter sees only the image projected with green light, whilst, for the same reason, the other eye, looking through the red filter, sees only the image projected with red light.

Soon after this publication, Rollmann claimed the priority of a similar process for the projection of stereoscopic pictures (§ 833).

[1] Similar devices have been used for stereo-radioscopic vision, using two anti-cathodes at a convenient distance from one another, and excited alternately in synchronism with the cut-out of the eye-pieces.

Many attempts have been made to reduce the fatigue resulting from the very different sensations experienced by the two eyes by using, both on the projectors and on the analysing glasses, complementary filters of nearly neutral tints. F. E. Ives in 1896 claimed to have succeeded in making two filters practically uncoloured, one transmitting the extreme red and a narrow band in the middle of the green, whilst the other transmitted two other spectral groups, one, on both sides of the yellow, and the other in the blue-violet region. The same results were obtained about 1906 by R. Luther.

A paper was published by H. Lehmann (1917), describing an apparatus for stereoscopic projection of ordinary stereograms in complementary colours (by ordinary stereogram is meant two black images side by side). A lantern using an arc and single condenser is fitted with two equal prisms joined by their edges along the line of junction of the two images of the pair, and two lenses of variable separation. He also points out that by suitable adjustment of the regions of transmission of the filters used, so that the transmitted luminosities are equal, it is possible to suppress all effect of colour in the projection of the pictures in black and white, for an observer seeing normally in colours, or to project stereograms in colour without alteration of their tints. He indicates the following liquid filters as fulfilling *approximately* the above conditions: a solution of copper sulphate saturated when cold in a cell 15 mm. thick, and a solution of potassium bichromate saturated in the cold and acidified with sulphuric acid in a cell 10 mm. thick.[1]

This method of projection, employing two complementary colours, has been claimed, in its application to cinematography, by Grivolas, in a patent in 1901, and since then by innumerable inventors. The different variations of the process employ either two simultaneous projectors or alternate projection of the left and right-hand pictures with the use of suitable colour filters on the shutter or alternate tinting of the images themselves on the film.

The stereoscopic "Chinese shadows" (incorrectly called anaglyphs on the programmes of the music-halls exhibiting this attraction), due to L. Hammond (1923), are based on this type of projection. Two ordinary projectors situated behind the stage illuminate a transparent screen, one with red and the other with green light. A person or object situated between the projectors and the screen appears on the screen as two shadows, one in red and the other green. If the left-hand projector, relative to the audience, has a red filter, and if the bi-coloured spectacles are worn so that the left eye is covered by the red filter, the observer sees in front of the screen a single shadow of the object in silhouette. This shadow will appear nearer the audience the nearer the object is to the projector, and a scene will have a greater exaggeration of depth the greater the separation of the projectors. By reason of the known laws governing the deformation of reconstructed objects when viewed stereoscopically under abnormal conditions, any object thrown towards the projectors will appear to be thrown towards each individual of the audience whatever his position in the theatre.

860. Projection of Anaglyphs. At the same time as he applied the anaglyphic method to the production of stereoscopic pairs of large size on opaque supports (§ 833), Ducos du Hauron applied the same principle to the production of transparencies for projection.

The application of the anaglyph to cinematography was first pointed out, we believe, by O. Gersacsevics and E. Franzos (1907), who described the production of anaglyphic film by superposition, after suitable toning, of two positive films placed gelatine to gelatine, one having been printed from a negative back to front. Many patents taken out since then claim the idea, but make use of films coated on both sides, as currently used in various two-colour cinematograph processes.

861. Projections in Polarized Light. The use of polarized light (§122*a*) for stereoscopic projections seems to have been suggested first by Otto Wiener. It was first put into practice in 1891 by John Anderton, who showed the process in public in London for some time. The projection was made on a screen which did not depolarize the light (ground glass, or silver paper mounted on calico). Two lanterns were used, one beam being polarized horizontally and the other vertically, by piles of plates the construction of which was very minutely described in the patent. The projected images were examined by means of binoculars fitted with similar piles of plates.

Although this process has been described in various periodicals and in a great number of

[1] Yellow and slightly purplish blue filters, each transmitting a different portion of the green and a different portion of the red, were made in 1933 by L. Lumière. The visual energy received by the two eyes being the same there is no fatigue. These filters have been used in stereoscopic cinematography.

treatises on stereoscopy, it has been re-invented many times. Its application to cinematography was claimed in 1908 by Boris Weinberg.

862. Geometrical Separation of the Two Images. About 1860 Claudet pointed out a process for stereoscopic projection, which, unfortunately was only visible to one person in a definite position. The two images are projected obliquely on a slightly ground glass, each in the direction of the eye to which it corresponds. Each eye sees the two images, but one of them appears much clearer than the other.

A more exact arrangement, but of equally limited application, was described under the name of the "*concentration stereoscope*" by G. Jager (1905). The images were projected on a lens in such a way that the eyes could occupy the conjugate points of the exit pupils of the projecting lenses.

A process suggested in 1908 by E. Estanave is a more complete solution of the problem, a large number of positions for stereoscopic viewing being possible, but the practical difficulties of the *stereoscopic screen*, viz., a transparent diffuser having in front of it a vertical line grating (§834), have not permitted of its practical use.

863. Stereoscopic Viewing of a Pair of Images Thrown on a Screen Side by Side. The various arrangements already described for viewing large size stereograms are applicable to a pair of images thrown side by side on the screen.

A stereoscope having two mirrors in front of one eye (§ 830) was described in 1899 by J. H. Knight for viewing stereoscopic projections.

The use of Galilean binoculars with variable separation of the objectives was proposed in 1903 by A. Papigny for viewing stereograms of large size and for stereoscopic projections. The use of this idea for cinematography was claimed by Prépognot (1904).

The use of pairs of prisms of adjustable orientation was described by Moëssard for viewing stereoscopic projections, the two images being either one above the other or side by side. It is simpler, as was worked out by J. Macé de Lépinay, to distribute to each row of the audience (or to the people in several consecutive rows), a pair of prisms adjusted to the angle subtended at each seat by the centres of the two images projected on the screen side by side.

Finally, there is the very simple apparatus used in Brussels in 1891 by M. Moulin. Each spectator held at some distance in front of the eyes a card having a rectangular hole cut in the centre through which each eye could only see its corresponding picture (§ 826).

CHAPTER XLIX

COLOUR PHOTOGRAPHY

864. The Various Processes. Since the beginnings of photography there has been the wish to reproduce not only the shape and the tones, but also the colours of the objects photographed, and a long list could be compiled of rogues who, by pretending to have invented marvellous processes for the photographic reproduction of colours, have been able to rob the artless, who have allowed themselves to be deceived by some tricks of sleight-of-hand.

The first hopes of success were given by the experiments of A. E. Becquerel (1848), who, making use of a phenomenon previously pointed out by Seebeck (1810), was able to reproduce the colours of the solar spectrum and then those of some objects on silver plates the surface of which was incompletely chlorided (at that time it was believed that a superficial layer of silver sub-chloride was formed). The results were only approximate, and these images could not be fixed. Nor did more success attend later attempts by a host of experimenters, who, instead of the silver plate, used a print-out paper previously fogged uniformly to produce a purplish colour[1] (photo-chloride; footnote to § 520).

Fruitless attempts had been made to utilize an observation made by Chevreul to the effect that the mixture in variable proportions of three suitably chosen pigments enables a large number of colours to be formed. The principles of trichromatic photography were, however, first clearly set forth by J. Clerk Maxwell (1861), who was the first to conceive and use the idea of selection negatives and three-colour projection. In 1867 C. Cros, a writer of humorous fiction, deposited with the French Academy of Sciences a sealed envelope (not opened until 1876) in which he laid down some of the principles of three-colour photography. Following the publication in February, 1869, of a patent applied for in the previous year by L. Ducos du Hauron, Cros published a paper on this subject, but it may be said that the most complete outline and forecast of the many working processes of three-colour photography were given by Ducos du Hauron in 1869. Although the communications of Ducos du Hauron were accompanied by some specimens, the lack of scientific precision in his descriptions, his allusions to an abandoned physiological theory, and the belief, general at that time, in the complete inactivity of green and red light on photographic preparations, all provided material for a violent campaign which deprived the inventor of all support for exploiting his processes and postponed their application until, twenty years later, these same processes were " re-invented."

An observation by Grothuss (1819) that fugitive colour substances are destroyed by the radiations complementary to those transmitted by the respective substances led C. Cros (1881) and R. E. Liesegang (1889) to suggest the possibility of reproducing the colours of a transparent polychrome image by exposing to light, beneath it, a sensitive layer formed of the black mixture of three fugitive colours, red, yellow, and blue. Such bleach-out colour films (extraordinarily slow) were worked out in particular by E. Vallot (1895), R. Neuhauss (1902), and K. Worel (1902). A very considerable advance in these processes, due to J. H. Smith, enabled a paper (Uto, perfected in 1911 under the name Utocolor) to be placed on the market which yielded a copy after about an hour's exposure to sunshine, without, however, ensuring the permanence of the image. This process has been abandoned, although some experimenters are still endeavouring to perfect it.

A method conceived and worked out by G. Lippmann in 1891, as an experimental demonstration of the phenomena of the interference of light, has furnished results of rare beauty and absolute perfection, but for lack of being able to obtain commercially the apparatus and the plates required, and perhaps also because of the exposures being very much longer than those usual at the present time, this process has been little used and has been almost abandoned. A perfectly transparent, grainless, gelatino-bromide emulsion is rendered panchromatic and exposed to light on its glass side in a special slide, forming a hermetically sealed tank of which the plate forms the front, and which is filled with mercury, thus obtaining a mirror in

[1] It is curious to note that this "adaptation" of the sensitive layer to the colour of the incident light occurs without a fresh liberation of silver (H. Buchheit, 1932).

optical contact with the emulsion. The light reflected "interferes" with the incident light, forming within the emulsion a system of alternating light and dark layers, parallel and equidistant. After development, the reduced silver gives rise within the emulsion to a stratified formation of which the laminae, corresponding with the light layers, represent layers of gelatine which have, in the case of elementary colours, a thickness equal to half the wave-length of the incident radiation (it is not possible to discuss here the case of complex colours, which are, however, quite as perfectly reproduced as the elementary ones). These thin laminae have exactly the correct thickness to reproduce the incident colour by reflection (colour of soap-bubbles).[1]

The three-colour processes, as practised commercially, require three negatives to be taken, and then the superposition in accurate register of the three elementary positive images. These operations, while presenting no unsurmountable difficulty, are certainly delicate and slow, and therefore this method is seldom practised except in photo-mechanical processes. One of the methods outlined in 1869 by Ducos du Hauron consisted in intermingling the three elementary images instead of superposing them. A somewhat crude attempt to apply this idea was made by J. Joly with only very limited success. He used a screen, in each inch of which were 180 bands, alternately violet, green, and orange. This process did not come into general use by professionals and amateurs until the production in 1907 by A. and L. Lumière of the Autochrome plate (with a trichrome mosaic screen formed of elements of microscopic size).

Starting both from a suggestion by J. Szczepanik (1899) and from the working methods specified by G. Lippmann for integral photography (§ 835), R. Berthon (1908) described a process of three colour photography where the three images are intermingled in the emulsion of a film of which the naked surface has been embossed to form lens elements of microscopic size. This process has been exploited in 1923 for professional cinematography by Keller-Dorian, and later for sub-standard amateur cinematography by the Kodak Company (1928), and, subsequently, by various other firms.

While it is necessary always to be exceedingly cautious in denying future possibilities, it does not seem rash to affirm that any inventor announcing that he has succeeded in reconstituting the colours of a subject by means of an ordinary photographic negative exposed under whatever conditions, must be either a lunatic, a humbug, or a rogue.

(*a*) Principles of Three-colour Methods

865. General Notes. The concept of Ducos du Hauron, as set out in his publications, may be summarized as follows (E. Wallon).

Any colour, natural or artificial, is a combination of the elementary rays contained in white light and which the spectrum shows us dissociated (§ 1). To obtain an exact analysis and synthesis of a colour, it is necessary to separate all the radiations which compose it, to measure them, and to re-combine them in the same proportions. Now, these elementary rays are infinite in number, so that the double operation seems impossible. Experience, however, fortunately reveals to us a simplification which renders it possible. It shows us that we can first gather the elementary colours into a limited number of groups which can then be treated as indivisible elements. Thus, in analysis, it will be sufficient to take the whole of the radiations belonging to each of the groups without need to detail them. For synthesis, instead of introducing the radiations themselves into the combination, we can again take these groups, without troubling whether they occurred complete and with their normal composition in the complex colour that we wish to reproduce.

The number of these artificial groups may be very limited. It is sufficient to form three, suitably selected, in order that the double operation of analysis and synthesis may be fully satisfactory in practice.

866. Trichromatic Selection. If a given multicolour object illuminated by white light is photographed three times, on plates of appropriate sensitiveness, and through filters which are respectively blue-violet, green, and red, and divide about equally the visible radiations of the normal spectrum, it will be found that the three negatives obtained differ very considerably. While white, neutral grey, and black are rendered to the same extent in all three negatives

[1] A Lippmann interference photograph may be compared to a series of resonators each of which "smothers" all vibrations other than those in resonance, that is, radiations identical with those having produced the stratification or with their octaves. We may remark in passing that an interference photograph forms the simplest of spectroscopes. The stratifications of these photographs are visible and measurable with the microscope in sections cut transversally in the gelatine film and put in water to swell, so as to increase proportionally the thickness of the various thin laminae.

when the exposures have been correctly proportioned, colours will be rendered very differently in them.

A pure saturated yellow for instance, which reflects nearly all the red and green rays, but absorbs the blue rays of incident light (§ 5), will be photographed as a very light grey would be through the red or green filters, and like a black through the blue filter. A vermilion, which reflects the major part of the red rays and absorbs the green and blue rays, will be rendered like a light grey through the red filter, and like a black through the two other filters. A yellowish-green, which reflects most of the green rays and a small fraction of the red rays, but absorbs the blue rays almost completely, will be rendered as a rather light grey through the green filter, like a medium grey through the red filter, and like black through the blue filter.

The differences between the negatives will remain, though less marked, for light, mixed, and dark colours (§ 8). Thus, for instance, a sky-blue, which reflects all rays but with the predominance of blue, will be photographed nearly like white through the blue filter and like a light grey through the two other filters. A myrtle green, which reflects some few green rays and absorbs all the others, will be rendered as a dark grey through the green filter and like black through the other two filters.

867. Additive Synthesis. Let us suppose that three transparencies, printed from the negatives described above, are each placed in a projection lantern, the three lanterns being adjusted so that the three images are superimposed on the screen. Let us place in each of the three beams of light the filter used in taking the corresponding negative, and let us adjust the intensities of the three beams so that white light is produced on the screen in the absence of the three transparencies, or, if not white, at least a light without any predominant hue.

In the portions corresponding with the pure whites of the subject, the three coloured beams (transmitted at their maximum intensity by the transparencies which are quite transparent in the image of these whites) will form white light on the screen. The image of a neutral grey will be of equal density in all three transparencies; the three beams, weakened proportionally, will still produce a white light, but one of reduced strength, giving the sensation of a more or less dark grey by comparison with the pure whites. A black in the model will be rendered as black in the three transparencies, which will not allow any light to pass to the screen and will thus give the impression of black.

If we consider the various colours of the model we shall find that they are reproduced satisfactorily with their various tones.

The images of a pure yellow object are equally transparent in the transparencies that control the distribution of the red and green lights, but this image is opaque in the transparency placed in the beam of blue light. The sum of the red and green lights, which are the only ones to reach the corresponding points of the screen, constitutes yellow (§ 5), which is brighter according as the original colour was purer. The image of a vermilion is transparent in the transparency projected by red light and opaque in the two others, so that the screen receives only red light at the corresponding points. The image of a yellowish-green object is transparent in the transparency projected by green light, slightly transparent in that passed by red light, and opaque in the other. On the screen this object will be formed by green light tinged with yellow by the addition of a little red light.

The image of a sky blue is completely transparent in the transparency illuminated with blue light and a little less transparent in the others, so that in the mixture of the three beams the blue will predominate slightly, thus giving a blue with an admixture of much white. The image of a myrtle-green is opaque in the transparencies distributing the red and blue lights and a little less opaque in that controlling the green light. The image, formed only by green light of much diminished intensity, will therefore appear a dark green.

868. Subtractive Synthesis. Three-colour synthesis by the actual superposition of coloured positive films, of dyes, or of inks, is up to the present the only one which lends itself to the production of prints on paper and other opaque supports.

Selection filter	Name of negative	Pigment used for the positive	Groups of spectral rays transmitted or diffused by this pigment
Blue violet	Yellow printer	Yellow	Green + red
Pure green	Pink printer	Pink	Red + blue-violet
Vermilion	Blue printer	Greenish blue	Blue-violet + green

The rôle of the superposed coloured layers is to absorb at each point of the image, which we obviously assume to be lighted by white light, those radiations which the object photographed did not emit. Each of the colours must

therefore absorb the spectral rays transmitted by the corresponding selection filter of which it is thus the complementary, as pure and as saturated as the dyes or pigments at our disposal permit.

For example, the image printed from the negative made with the green filter must be formed of pink dye or pigment, transmitting or diffusing all the visible rays not transmitted by the green filter—and only those, that is to say, the total of the blue-violet and red rays. For the various points of the subject have recorded themselves on the negative with a density which is less according as the emission of green rays is less, and in consequence the positive printed from this negative shows most density in the points which did not emit any green rays; the pigment used to form this image must therefore absorb the green rays and only them.

869. Let us assume that three film images have been superposed, obtained, for instance, by dyeing gelatine reliefs (§ 676) in suitable colours. These images (called elementary *monochromes*) have been printed under the selective negatives previously considered (§§ 866 and 867).

These three films are colourless in the parts corresponding with the pure whites of the subject; their superposition in register will naturally produce white. A black object will be represented in each of the films by the colour at its deepest intensity. If each of the colours actually absorbs one-third of the spectrum, any rays which pass through two of the films will necessarily be absorbed by the third, and the absence of any transmitted light will give the sensation of black. Images of a neutral-grey must be of the same density in all three films; if the respective colour intensities are correctly balanced, the absorption due to their superposition will be the same for all visible radiations, and a neutral-grey will be the result.

The image of a yellow will be represented by yellow in one of the films, the others being colourless at the corresponding points. The image of vermilion is formed by the superposition of yellow and of pink. The resulting colour will be due only to the rays in the spectral region transmitted by one and the other of the two superposed dyes; it will therefore be a pure red. The image of a yellowish-green object will be due to the superposition of yellow at full intensity with greenish-blue of reduced intensity. This will transmit all the green rays and a portion of the red rays, incompletely absorbed by the non-saturated greenish-blue, thus reproducing the yellowish-green of the subject.

The image of a sky blue is formed entirely by the blue film, which is very weakly coloured in this part, thus reproducing the blue (mixed with white) of the subject. The image of a myrtle-green will be formed by the superposition of the yellow and of greenish-blue of full depth, and of pink of somewhat less intensity. The pure green resulting from the superposition of the yellow and greenish-blue will be greatly darkened by the pink which is its complementary, but of which the intensity is insufficient to effect complete extinction. The dull green of the subject will thus be formed.

870. Similarities of the Two Methods of Synthesis. The following experiment shows the close correlation between synthesis by addition of lights and subtractive synthesis by superposition of pigments.

Three projection lanterns being adjusted as assumed in § 867 and fitted each with its coloured filter, let us place only one of the transparencies in its corresponding lantern. If, for instance, we place in the lantern projecting green light the transparency printed from the negative exposed through the green filter, it will be found that the image on the white screen appears a bright pink, which is a mixture of the blue and red lights freely passed by the lanterns in which there are no transparencies. In the same way, if only the transparency corresponding with the blue filter, or with the red filter, is placed in position, the image on a white screen will appear as yellow (mixture of green and red) or as greenish-blue (mixture of blue and green).

The introduction of one transparency in the beam of light corresponding with it stops the rays which the partly masked filter would have transmitted, and by the action of which the corresponding negative was made. The colour which results from this subtraction is naturally the complementary of that of the selection filter.

The simultaneous introduction of two transparencies, each in the beam corresponding with it, removes from the parts of the image common to both the rays which the two filters thus masked transmitted, thus leaving only the light transmitted by the third filter. This last colour is exactly that which would result from the superposition of the two pigmentary images, respectively complementary to the masked filters. If, for instance, the only filter the light from which is not thus intercepted by a transparency is the green filter, the green which on the screen illuminates the parts common to the two projected images is the one that would be

obtained by superposing a yellow monochrome (complementary to the blue filter) and a greenish blue monochrome (complementary to the red filter).

871. Impossibility of Trichromatic Reproduction of the Spectrum. The trichromatic processes, while reproducing and modulating satisfactorily pigmentary colours, at least when their bands of complete absorption and reflection are not very narrow,[1] fail to give even a grossly approximate rendering of the spectrum.

When an attempt is made to reproduce the spectrum, it is found that the latter is divided into five flat tints. The three regions, each transmitted by only one selection filter, are represented by the colour of this filter. The two intermediate bands are rendered differently according as the spectral-transmission regions of the selection filters have, or have not, regions in common. If such regions overlap, the colour of the intermediate bands is that of the addition of the lights transmitted by the respective filters; if these regions have a gap between them, the intermediate bands are black.

By reason of its very principle, trichrome photography cannot reproduce a colour which is more elementary than those of the filters used for analysis. This impossibility is of minor account, since elementary colours do not exist in Nature. The rainbow and the colours due to interference and polarization are sufficiently far removed from elementary rays to permit of being reproduced satisfactorily.

872. Photographs in Two Complementary Colours. While it is obviously impossible, by employing two colours only, to reconstitute all colours correctly, it is at least possible to obtain in this way very pleasing effects which can even give an almost perfect illusion of reality where there is no means of comparison, as is the case when pictures are projected in a darkened room. It is of course necessary that the missing colours should not be essential to the picture (L. Ducos du Hauron, 1895).

This incomplete method of colour reproduction has been, until quite recently, the one most generally used in colour cinematography, either with additive synthesis[2] (alternate viewing of the elementary images; Kinemacolor process of G. A. Smith, 1906), or with the subtractive method (elementary monochromes, printed in register on both sides of the film; J. E. Thornton, 1912; Technicolor, and other processes).[1]

The colours chosen are usually a vermilion red (colour of the normal red filter used in three-colour selection) and a greenish-blue (colour of the greenish-blue pigment of three-colour subtractive synthesis). The negative exposed under the red filter is used for producing a greenish-blue monochrome, and the negative exposed under the greenish-blue filter is used for a red monochrome. As a matter of fact, these two colours do yield a satisfactory rendering of flesh tints. It is obvious that in this way it is not possible to obtain either yellow or purplish-blue, so that this pair of complementaries is but ill-suited for landscape photography (unless the sky does not appear in the picture).[2]

There have been several suggestions or patents for reducing to two the number of the selection negatives for three-colour synthesis, the third negative being obtained later by combinations between one of the original negatives and a transparency printed from the other negative. Experience has shown that none of the proposed combinations produces the expected result, and simple reasoning will show that such hopes are chimerical.

(*b*) Three-colour Selection

873. Three-colour Selection Filters. Formerly attempts were made to produce almost monochromatic filters, each transmitting only a narrow spectral band. It is, however, a mistake that some groups of visible rays should escape record on one or other of the three negatives. Then use was made of filters with "vignetted"

(A. Nodon, 1904, and others) to effect the additive synthesis of two images in a stereoscope, each of the two images of the stereoscopic pair being obtained through one of the two selection filters, and the corresponding positive transparency being viewed through an identical or only slightly different filter. Binocular vision, however, does not allow of the addition of lights satisfactorily, the resulting colour constantly varying between the two component colours. (§ 833)

[1] Owing to these peculiarities, difficulties have occurred in the reproduction of the purple violet of Cineraria and of certain dyed fabrics. A grey involving two spectral bands of complementary reflection in the red and in the blue green would be reproduced as pink by three-colour synthesis (A. J. Bull, L. W. Oliver, and D. A. Spencer, 1933).

[2] At various times suggestions have been made

[1] The colour scale can be a little more extended in subtractive processes than in additive ones.

[2] The two-colour process enables excellent facsimiles to be obtained of histological or bacteriological preparations stained in two colours for micrography. The colours to be used for the elementary monochromes must be those used in preparing the specimen, or colours of the same hue, and the selection filters must be chosen accordingly.

absorption bands and with ample overlap of spectral transmission regions, but later the filters used had cuts as sharp as possible with a slight overlap of the spectral regions transmitted.

If it were possible to make coloured filters with sharply defined absorption bands, photographs made in the spectroscope through such filters would have the same regions of densities whatever the illumination, whereas, in photographs taken through a filter with gradual absorption, the spectral region recorded on the plate extends farther (for an equal duration of exposure) as the intensity of the light is greater. Filters with "soft cuts" would seem to be a constant cause of errors, because lights and shadows occur in all subjects photographed. The quantity of light reflected by the bright portions being much larger than that reflected by the shadows, selection may not be identical for objects of the same colour but differently illuminated.

The very ingenious experiments of D. A. Spencer (1935), experiments limited, however, to subtractive synthesis, have shown that in the present stage of the dyes and pigments available for this synthesis, the form of the spectral transmission curves of the selection filters has only a negligible effect on the qualities of the three-colour prints obtained, and that there are available, furthermore, very wide tolerances in the extent of their respective regions of transmission. The results given by various combinations of filters with increasing overlapping differ merely by the decreasing saturation of the colours in the resultant three-colour prints. In short, errors in filter transmission, when they are not exaggerated, are negligible compared with errors due to the colours used in synthesis.

The extreme limits have not been disputed. Under normal conditions the eye cannot see ultra-violet (up to 4,000 A.U.), nor infra-red (beyond 7,000 A.U.). The blue filter must therefore absorb the ultra-violet, while the limit of sensitiveness of ordinary panchromatic plates renders unnecessary any limitation of the transparency of the red filter towards the infra-red.

As a rule, the following are the limits for each of the spectral regions which can act on the photographic emulsion through the three selection filters[1]—

Blue-violet Filter	Green Filter	Red Filter
from 4,100 to 4,950	from 4,850 to 6,000	from 5,800 to 6,900 A.U.

[1] As an example we give here the formulae recommended by A. von Hübl for gelatine selection filters, the weights indicated being for each 100 square centimetres of filter area.

Blue-violet	Green	Red
Acid Rhodamine 30 milligrammes Carmine blue 10 mg.	Carmine blue 7 mg. Tartrazine 25 mg.	Tartrazine 20 mg. Rose Bengal 15 mg.

When it is necessary to reduce the exposure to the minimum, it is advantageous to associate filters having a very wide transmission with emulsions of restricted chromatic sensitivity, as such filters can be much more transparent in the useful region. For instance, the green and blue filters are replaced by yellow and pink filters, respectively used with an orthochromatic emulsion and an ordinary emulsion. Besides the useful spectral region these filters will transmit red, which is inactive on the emulsions in question, but the one transmits much more green and the other much more blue than the normal selection filters would do (F. W. Coppin, 1933).

The dyed gelatine films used for selection filters can be employed unprotected or sealed between two pieces of glass; in the latter case each filter must form a cemented system with plane-parallel surfaces, and the thicknesses of the three filters must be such that the displacement of the sharp image (§ 120) must be the same in each case.

The coefficients (factors) of the selection filters must be determined experimentally (§ 214) for the panchromatic emulsion and light employed.[1]

It is perfectly possible to make coloured filters all of which have the same factor for a given emulsion and light. This can be done by adding a neutral grey filter of appropriate density to the ordinary selection filters which have a factor lower than the maximum one. The factors will, however, be modified if the conditions are changed.

874. Practical Three-colour Selection. At a time when panchromatic emulsions were not available, the three negatives for three-colour selection were taken on an ordinary plate, on a plate sensitive to green and on a plate sensitive to red. Selection is now almost always done on panchromatic material of the same batch of emulsion, and except where the use of flexible

[1] Confusion with the case of screen-plates (plates embodying a multicolour mosaic screen in which the exposure is necessarily equal under each microscopic element of the mosaic) leads some photographers to believe that a correcting filter is necessary when lights other than daylight are used. As long as the light emits a continuous spectrum (obviously a necessary condition) the corrections are automatically assured by adopting factors appropriate to the light employed.

film cannot be avoided, glass plates are used so as to avoid any risk of shrinkage of the support.

When daylight is not available or is too weak or too variable, the artificial light usually employed is that supplied by high-power incandescent lamps, which favours exposure under the red filter and balances the individual exposures and, as a rule, reduces the total exposure.

In order to check the perfect balance between the three images at all stages of the work, it is necessary to add to the object a scale of neutral grey tones produced photographically; each of the areas must be of sufficient size to permit their densities to be measured on the negative; this scale must be placed in such a position that its image can be cut away after the work is done. A photograph in colour is perfect only if it reproduces correctly a scale of neutral-grey tones, and this is possible only if the images of these greys have the same strength in the three negatives.

To facilitate registration, and the correct superposition of the three elementary positives, two marks are placed at the edges of the images. These marks must be as far from each other as possible. These guide-marks are crosses drawn on Bristol board, usually white on a black ground, the lines being sufficiently thick for their image to be visible after reduction in size. As a rule, several crosses are intermingled, the lines being of different thicknesses, and the mark chosen is that with the finest lines still clearly visible.

Finally, in order to identify easily the three negatives, it is usual to photograph not only the grey scale and the two marks, but also a test piece consisting of patches of red, green, and blue-violet, or greenish-blue, pink, and yellow, each patch bearing in black letters its name (or at least the initial of its name).

Focussing must be done after one of the filters has been fitted to the lens. As a rule, the green filter is chosen because it gives the most luminous image,[1] and also because it is the green image which occupies the middle position when the three images are not exactly in the same plane.

The exact exposure is of greater importance in tricolour photography than in monochrome work, because corrections cannot be made without upsetting the balance of the three negatives. Use must therefore be made of some form of exposure indicator (§ 324).

Even when selection is effected with plates of the same batch of emulsion, development in identical conditions (simultaneous immersion for the same length of time in the same developer) usually gives the negative taken under the blue filter a contrast factor (gamma) inferior to that of the two other negatives. It is, therefore, necessary to ascertain by sensitometric tests or by trial and error the equivalent durations of development for the three negatives;[1] as a general rule the yellow printer is developed for 20 to 100 per cent longer than the two others.

After drying, it is necessary to check the register. One of the surest means consists in printing a transparency from one of the negatives. It is possible to use a narrow strip cut from a plate of sufficient length to permit of both the register marks being included; film should never be used because of the risk of play in the support. After drying this transparency, it is placed on each of the three negatives in succession, when it can be seen whether all three images and the register marks are in coincidence.

The usual trouble caused by the retouching required by prints in colour produced by subtractive synthesis, has been considerably reduced or even done away with by doubling one or several of the selection negatives, developed to a value γ_1 above the desired value γ_0, with a transparency copied under another negative and developed to $(\gamma_1-\gamma_0)$. For instance, the pink and yellow negatives are doubled with a positive of the blue-green (A. Murray, 1933, following a suggestion of E. Albert, 1897).

875. Special Apparatus for Tricolour Selection. While, in the case of inanimate objects, any photographic camera may be used that is sufficiently rigid not to be put out of adjustment during the changes of the filters and dark slides, required when making the three exposures, it is obviously impossible to photograph in this way animate objects, since such are bound to move during the period of the three exposures

[1] As focussing magnifiers are not achromatic, their adjustment must be made after the filter is in position. Owing to achromatic defects in the human eye, focussing is very difficult with the blue filter when it transmits a little of the extreme red (beyond the limits of panchromatic plates), as is often the case.

[1] If development is judged by inspection, it must be based exclusively on the scale of the neutral greys. A subject in a dominant colour would give a very thin, though correct, negative under the filter complementary to that dominant colour, and one might be tempted to regard that negative as deficient in exposure or development.

and the changes of apparatus. Even landscape photography can be attempted only in exceptionally calm weather, otherwise the tops of trees may not occupy the same positions in the three elementary images.

This loss of time has been reduced by devices for the mechanical changing of the filters and of the plates. For instance, the filters may be held in contact with the plates in a repeating black sliding vertically and dropping after each exposure under its own weight or by springs, so as to bring the next plate into position. The actuating mechanism is controlled by the shutter or by the shutter release. In other patterns, the filters are placed on the edges of a disc and move automatically in front or behind the lens each time a plate is changed. The plates have also been placed on the three faces of a prism with equilateral section and turning on itself 120° after each exposure. Numerous cameras built on these lines have given excellent results, without, however, affording the certainty attainable with an instrument taking the three pictures simultaneously.

876. Simultaneity will obviously be ensured if three linked cameras are used, with three identical lenses released at the same moment, but the images thus obtained (in conditions comparable with those of stereoscopic photography) are usually not identical, and cannot therefore be superposed, unless the nearest planes of the subject are at a considerable distance.[1]

Various devices have been adopted to decrease these stereoscopic differences between the three images. The lenses have been brought close together, their centres occupying the points of a triangle with three mirrors at 45° on each optical axis reflecting the sharp images on to three of the lateral walls of the camera; a collimating lens has been placed in front of the three lenses (G. Lippmann, 1886), substituting for comparatively close objects a distant virtual image; reflectors have been placed in front of the lenses to substitute for the three real viewing points either one single virtual viewing point or three virtual viewing points aligned in depth and thus occasioning only negligible differences between the images.

[1] The same stereoscopic differences again appear if selection is done with one lens used with reflectors of which each utilizes the beams transmitted by different portions of the lens (§ 58) to form one of the images, except in the case where the divider uses three concentric zones of the lens.

The beam of light issuing from one lens can be split into three geometrically identical beams by means of transparent reflectors placed one behind the other at 45° to the common axis (platinum-coated mirrors, colour filters acting as reflectors for the rays complementary to those transmitted, opaque perforated mirrors, opaque mirrors formed of two sectors opposed at the summit and rotating at high speed round an axis perpendicular to their plane and passing through their centres). Finally, the beam can be divided into three beams which are not geometrically identical, but of which the differences are practically negligible, by means of annular reflectors inclined at 45° to the optical axis (and which, owing to the obliquity are limited to elliptic contours), the images being received on the back and two lateral walls of the camera.

The ingenuity of inventors has been given free rein in this domain, and innumerable combinations of mirrors and prisms have been patented, and sometimes even used, without always recording advances on their predecessors. To describe them, even in brief, would take us too far.

To reconcile a sufficient depth of field with the need for the ultra large aperture lenses required in order to reduce exposures to the minimum, cameras for taking the three pictures simultaneously are generally built for very small formats, the negatives being subsequently enlarged. It should be noted that the use of dividing systems involving an appreciable thickness of glass (for instance, a cube of glass formed by the assembly of prisms of which the surfaces are partially silvered) would introduce inadmissible aberrations in a lens which was not specially computed for such an addition. This drawback is avoided by using pellicular reflectors, which are, however, very fragile.

877. Simultaneous Selection on Superposed Emulsions. Numerous attempts have been made to permit simultaneous tricolour selection without special apparatus on three superposed sensitive emulsions, carried on independent supports (*polyfolium chromodialytique* of Ducos du Hauron, 1897) with interposition of coloured filters (which can possibly be formed in the emulsion layers or on the supports by means of dyes, the colour of which is discharged during normal treatment). After many failures, generally due to lack of sharpness of the images recorded on the second and third sensitive layers, encouraging results have been obtained by using

for the first two films very thin, almost transparent emulsions coated on very thin supports. Very satisfactory results have been achieved in two-colour cinematography, the selection being effected on two films unrolled with their sensitive surfaces in contact (Multicolor and similar processes).

A far more daring idea of L. D. Mannes and L. Godowsky (1923) has given rise, after long and delicate elaboration, to the Kodachrome process (1935) in which the selection is done on three thin layers of emulsion successively coated on the same support with layers of dyed gelatine interposed. A series of very complicated operations, carried out in the factory for the user, produces by inversion of the triple negative a positive in colour formed by the superposition of three pigment images (§ 883).

(*c*) Temporary Additive Synthesis

878. Triple Projection. We have already discussed (§ 867) the principle of this method of synthesis by addition of lights. In working the process one is led to employ for synthesis filters which are somewhat different from those used for analysis. Our eyes are sufficiently imperfect not to distinguish between two identical hues, but differing qualitatively and quantitatively in composition, so that it is not necessary to have filters of a rigorously determined degree of absorption. The only conditions requiring to be fulfilled are that the total of the three transmitted beams, from equal intensities of incident beams, should give pure white, and that, under the same conditions, their sums, two by two, should form a pure yellow, a greenish-blue, and an intense pink.

The employment of three separate lanterns would involve great difficulties in adjustment. Use has been made of three lanterns superposed or juxtaposed and illuminated either by three separate light-sources or by one single light-source. Two of the three lenses must be fitted with horizontal and vertical sliding movements, so as to allow the three images to be superposed on the screen. The three transparencies are usually assembled once and for all in a frame fitted with register screws, so as to reduce the operations of adjustment when projecting. Such arrangements have been made at various times for still projection (F. E. Ives, 1889; L. Vidal, 1892; W. de Abney, 1904, etc.).

This same method of synthesis has been employed in tricolour cinematograph projection, the elementary images being projected either in rapid succession (H. Isensee, 1897, following a suggestion by C. Cros in 1869), or, simultaneously (B. Jumeaux and W. N. L. Davidson, 1903; L. Gaumont, 1909, etc.).

879. Chromoscopes. Instruments with semi-transparent or coloured mirrors, similar to those described for simultaneous selection by one lens (§ 877) can be used for viewing simultaneously

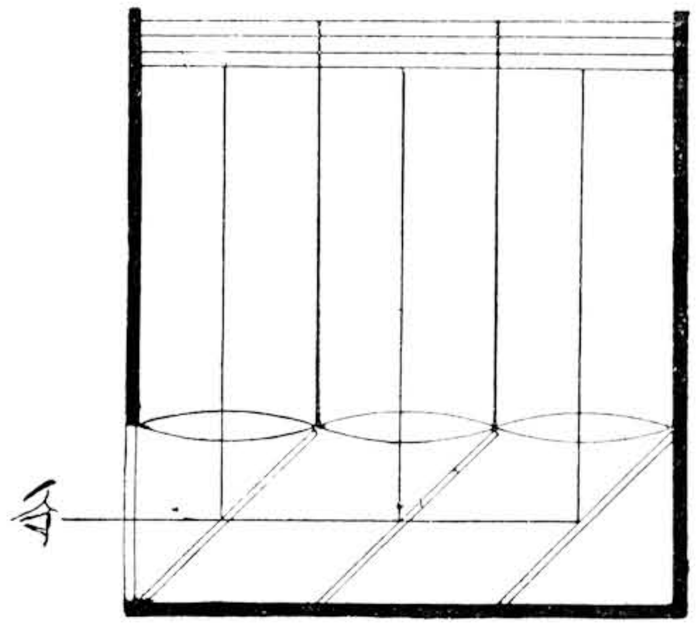

Fig. 217. Chromoscope
(Ducos Du Hauron)

in register the three transparencies, each in contact with an appropriate colour filter. One of the simplest of the many chromoscopes suggested or made is the one described by L. Ducos du Hauron (Fig. 217). Three mirrors, of which two are semi-transparent, are fixed at 45° to the line of sight; three transparencies on a single plate are in the focal plane common to the three convergent systems, and have their images thrown back to infinity in coincidence. As the beams are parallel on reflection there is no fear of double outlines by reflection from the two surfaces of each mirror.

In connection with chromoscope synthesis, reference may be made to a method of synthesis by intermingled images, patented in 1899 by J. Szczepanik, and of which several variants have since been tried. The diaphragm of a photographic lens is divided into three parallel bands covered respectively with the three tri-colour selection filters. By placing in front of the photographic plate, parallel to its plane and at a suitably adjusted distance, a grating of opaque equal and equidistant lines, arranged parallel to the bands in the diaphragm, the sharp image is divided into continuous bands, each formed entirely by one of the coloured lights transmitted by the filters, the negative thus obtained forming a medley of elements taken from the three selection negatives. By

placing a transparency printed from this composite negative in the same position and illuminating it by transparence by a light-source and condenser, an image is projected on the screen which, when viewed at some distance, reproduces in its colours the object photographed.[1]

880. Lenticular Colour Photography. A film coated with a reversible panchromatic emulsion

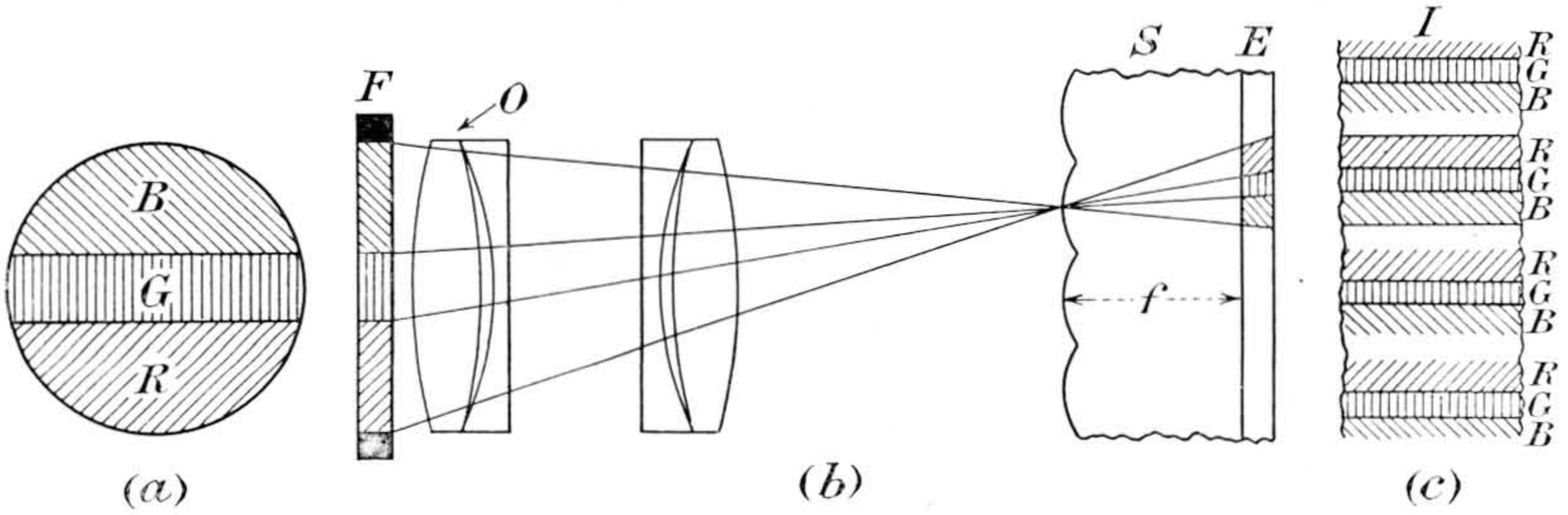

FIG. 218. THE PRINCIPLE OF LENTICULAR COLOUR PHOTOGRAPHY

E (Fig. 218) is embossed under heat on the free surface of the support S, by passing under pressure between a smooth cylinder and a cylinder engraved with continuous grooves, at the rate of about 20 per millimetre. By this means there are formed corrugations each constituting a cylindrical lens, of which the focal length must be about equal to the thickness of the base. In front of the lens O is mounted a filter F with three coloured segments B, G, R, respectively blue, green, and red (shown separately, seen from the front, at a) of which the strips are parallel to the cylindrical lenses. The camera lens O is focussed on the emulsion surface of the film, and must have a relative aperture equal to that of the diopters formed by the embossing. Each of the corrugations thus gives on the sensitive emulsion an image of the tricolour filter (the combination of these images is shown diagrammatically at c) of a length equal to that of the corrugations, and in which the illumination of each line is proportional to the intensity of the considered primary colour diffused by the corresponding point of the subject. In this manner there are recorded three intermingled selection images identical with those that would have been obtained through a line three-colour screen.

After development and inversion of the image, the latter can be projected in colour on a screen, by means of an optical system composed of a lens and of a filter with three coloured strips, such that this projection filter and the camera filter are seen from each point of the film within the same angle. All the rays issuing from a band B of the image are directed by the corresponding corrugation to the band B of the filter. In the same way, the light that has passed a G or R band of the image is directed respectively to the G or R band of the filter. The image projected on the screen reconstructs the form, luminosities and colours of the subject by narrow continuous bands whose structure is not apparent unless the screen is viewed from very close quarters.

Difficulties have occurred in copying such films, but they now appear to have been overcome, which will enable the process to be used on an industrial scale hitherto impossible, the process having been used only in amateur cinematography and in photography in miniature sizes.

(*d*) THREE-COLOUR TRANSPARENCIES AND PRINTS

881. Tricolour Transparencies. It is not possible in this volume to describe in detail the numerous working methods by which tricolour transparencies can be obtained by superposing in register three images on film. We may mention, as very suitable for obtaining the three elementary monochromes for this method, the various processes of dye-toning with mordants (§§ 602 to 604), and, among the pigment processes, the process of imbibition of gelatine reliefs, details of which, for multicolour images, have been given (§ 676).

The sole difficulty is to ensure the balance of

[1] Among the most interesting variants of this arrangement may be mentioned a method suggested in 1895 by F. M. Lanchester and subsequently worked out by J. Rheinberg (1904) and by A. Chéron (1906) in which the tricolour filter in the diaphragm is replaced by an acute prism, each of the elements of the image projected through the grating forming a narrow spectrum.

the three images; for this the prints, made by contact or by enlargement (when the prints are made on gelatino bromide films), are exposed for the same time and developed together under the same conditions. As a rule, several sets of elementary monochromes are made and dyed to various depths of colour; by repeated trial, three images are found which give the most faithful reproduction of the subject. Before finally mounting, the three images so chosen are used as patterns, and other prints are made of this depth as far as possible.

When gelatino-bromide films are used for this process they must be chosen with as thin a support as possible, so that the three elementary images are in planes as close as possible to each other. Films of the same make should be used, with the object of avoiding failures through differences in the shrinkage of the supports.[1]

882. Tricolour Prints on Paper. In addition to the process by imbibition of gelatine reliefs, of which we have already described the transfer to paper (§ 676), it is possible to make tricolour prints by the carbon process and its variants (carbro), or by the process of hydrotype printing by discharge of dyes.

Makers of carbon tissue supply on request the special colours required for tricolour work (the blue is usually not green enough, nor is the red purple enough). It is essential to cut the various pieces the same way of the paper so that distortion due to wetting and drying may be about the same in the three images. As a temporary support a sheet of glass or celluloid is used, so that the effect may be judged before final transfer. Double-transfer paper is generally used only after several wettings and dryings, with the object of reducing the error from this cause during the final transfer.

In the case of hydrotype prints, the partial discharge of the dye during the trials to test register can be prevented by placing a sheet of very thin celluloid between the relief and the gelatine-coated paper.[1]

883. Kodachrome Film. Kodachrome film, the use of which is at present restricted to substandard cinematography and to photography in miniature sizes, permits of colour photography with an ordinary camera without the addition of any special accessory,[2] and with exposures of roughly the same order as those used for rapid black and white film, but with considerably less latitude in exposure.[3]

The base receives successively (in addition to the anti-halation backing and the substratum) five superposed layers, which, starting from the base, are an emulsion sensitive to blue and to red, a colourless and very much hardened gelatine isolating layer, an emulsion sensitive to blue and to green, a second isolating layer, and, lastly, an emulsion dyed yellow which is sensitive to blue only. The layers of emulsion, and especially the isolating layers, are extremely thin, their total thickness not exceeding that of an ordinary reversible emulsion. Owing to the presence in the upper emulsion of the yellow dye, the three emulsions record blue, green, and red respectively (starting from the outer emulsion). After inversion the corresponding positive images must therefore be respectively in the same order, yellow, pink, and blue-green.

After the photographs are taken the film is sent to one of the processing works where it is subjected to the following operations.

The film is first developed as a negative, after which the metal silver forming the three selection provisional negatives is dissolved. The film then passes in front of a thermo-electric couple

[1] Although it is only applicable industrially to cinematograph films, an ingenious process of subtractive synthesis due to B. Gaspar (1931) should be mentioned. The sensitive film used for printing is made by coating on the same base three positive emulsions of suitable colour sensitivity, each with the addition of a dye which is insoluble in water and in ordinary photographic baths, but which is decolorized by a reagent attacking the silver of the provisional negative image, by an amount proportional to that of the silver thus attacked. One of the surfaces of the base is coated with an ordinary emulsion dyed blue-green, on which a positive of the blue-green is copied by white light. On the other surface there are successively coated a red sensitive emulsion dyed yellow, and an ordinary emulsion dyed magenta. The positive of yellow is copied in red light on the emulsion dyed yellow, and the positive of magenta is copied in blue light on the emulsion dyed magenta. After the three printings the film is developed as a negative, treated in the bath which causes decoloration on contact with the silver, and finally the silver bromide and the residual silver are eliminated.

[1] A recent study by M. Seymour (1935) of the processes by imbibition and by hydrotypic discharge has enabled him to work out simple and precise methods, which are described in the booklet *Three-colour Prints by Eastman Wash Off Relief Films*.

[2] It is, however, advisable to place on the lens a filter absorbing ultra-violet when photographing distant landscapes in order to reduce the aerial haze. Furthermore, if the film intended for daylight photography is used with artificial light (incandescent lamps), or conversely, it is necessary to use the appropriate compensating filter.

[3] Under-exposure often leads to a predominant bluish tint, and over exposure to a predominant reddish tint.

excited by a beam of infra-red light which is modulated successively by each of the pictures so as to automatically regulate, by means of a relay, the power of the lamp by which the second uniform exposure is given (§ 440), thus compensating largely for errors in exposure. Re-development is done in a developer containing, besides the developing agent, an adjuvant forming, with the oxidation products of the developer, an insoluble blue-green dye which is deposited on the image in amount proportional to that of the reduced silver (§ 350) forming the provisional positives. The three black positive images are thus each doubled with a blue-green image which ultimately is to remain only in the lowest image. After elimination of the silver bromide not used for the positive images, the film is washed and dried. It is then placed in a bath, the action of which is restricted to the two upper images, which oxidizes the silver to silver chloride and destroys the blue-green dye. After washing, the film is exposed to light and re-developed in a developer similar to the preceding one, but giving a pink image, and it is then washed and dried. The film is then placed again in the oxidizing bath, the action of which is now restricted to the superficial layer of emulsion from which the pink dye deposited during the previous operation is thus eliminated. After washing, the film is re-developed in a developer, leaving in the gelatine a secondary yellow image. After washing, the silver of the three images is finally removed, and the film is washed and dried.[1]

(*e*) Colour Screen Plates and Films

884. Various Commercial Forms. The Autochrome plate was the first practical application of a sensitive emulsion coated on an irregular tricolour mosaic for the direct photography of colours by permanent additive synthesis. Since 1933 the Autochrome has ceased to be supplied in the form of plates, but only in two varieties of film: Filmcolor stiff film cut in sizes, always used with the lens fitted with a compensating filter chosen according to the character of the light illuminating the subject, and Lumicolor roll-film or film-packs with a much faster emulsion, the gelatine backing of which forms the compensating colour filter for photography in natural light.

Agfacolor plates and flat films (J. H. Christensen, 1912), similar in structure to the Autochrome, are used with a compensating filter, while the more rapid Agfacolor Ultra roll-film permits photography in natural light without a compensating filter.

The Dufaycolor film (1934) with a screen of regular geometrical pattern results from very important successive improvements by many English technicians to the Dioptichrome plate (L. Dufay, 1909). This film is also available in two varieties: D.2, flat films and sub-standard cinematograph films for use with a compensating filter, and D.1, roll-films, film packs, and perforated 35 mm. film in short lengths for miniature cameras, for use in natural light without a compensating filter.[1]

Important advances have recently been made in the speed of several of these sensitive emulsions and others are announced as imminent at the time of writing this chapter. We will therefore refrain from giving precise information, which is likely soon to be obsolete, and we cannot insist too strongly on users following the instructions of the various makers as regards exposure and the various treatments.[2]

[1] A similar process, worked out by J. Eggert (1936) and commercialized by Agfa, uses insoluble couplers, a different one in each of the three emulsions. The processing of this film comprises a first development (giving a provisional negative image), a rinse, a controlled exposure, development of the positive by a developer derived from phenylenediamine, the elimination of both silver and silver bromide by means of Farmer's reducer, and the final washing.

[1] We mention here some screens and some plates with or without adhering screens the making of which has been discontinued.

Joly screen (J. Joly, 1897), formed of parallel bands (80 of each colour per inch), used as a screen separate from the sensitive plate.

McDonough screen (McDonough, 1900), formed of parallel bands (100 bands of each colour per inch), used as a separate screen.

Omnicolore plate (R. de Bercegol and L. Ducos du Hauron, 1907), with an adherent screen formed of blue bands (of about 0·05 mm.), separating rows of rectangles alternatively red (0·06 × 0·04 mm.) and green (0·06 × 0·08 mm.).

Thames plate (C. L. Finlay, 1908), with an adherent screen formed of red and blue circles (of 0·11 mm. diameter, the centres occupying the apices of a series of squares of 0·12 mm.) on a green background.

Dioptichrome plate (L. Dufay, 1909), first supplied as a separate screen, then as a plate with adherent screen, formed of green bands (of about 0·06 mm.), separating rows of rectangles (0·07 × 0·10 mm.) alternately blue and red.

Paget screen (C. L. Finlay, 1913), a chequer pattern containing red and green squares (of 0·084 mm.), with a double number of blue squares (0·063 mm.), the areas occupied by the three colours being thus very nearly equal.

[2] Several makers of roll-film and film packs include the cost of processing at their works in the price of the film.

(*f*) Colour Screen Plates and Films

885. The Autochrome Plate[1] and Films. The microscopic particles of the mosaic which forms the tricolour screen of the Autochrome are grains of potato starch[2] fined by levigation, so that only those grains are retained which are between 8 and 20μ (thousandths of a millimetre) in diameter, with a marked predominance of grains of 12–16μ diameter. These grains are divided into three parts, dyed respectively blue-violet, green, and red in concentrated solutions of suitable basic dyes. The colour must be very intense to ensure efficient absorption of the light by so thin a coating. After drying, these grains are intimately mixed in such proportions that the resultant colour is not far removed from a neutral grey.

Glass plates of practically constant thickness (1/16th in.) or films are uniformly covered with a tacky coating on which the mixture of coloured grains is dusted. The grains can therefore form only a single layer.[3] The spaces between them are filled in with very finely-powdered wood charcoal. The coated plate is then subjected to pressure to squeeze the starch grains into contact. The pressure used is very considerable—over 30 tons per sq. in.—which is near the crushing limit of glass. The pressure is applied in continuous narrow bands (about 1/16th in. wide).[4]

After this species of rolling, the mosaic screen is protected by a thin coating of waterproof alcohol varnish, which, after drying, must have the same mean refractive index as the starch. The resins used must be of high melting point in order to avoid too rapid destruction in case of heating, and they must be without any action on the sensitive emulsion which is afterwards applied. The thickness of the three-colour mosaic and of the coat of protective varnish is about 15μ.

A thin layer (about 4μ) of a fine-grain panchromatic emulsion is then coated on the varnish. This emulsion is proportionately richer in silver bromide than ordinary emulsions. The grains of the developed image have an average diameter less than 1μ, and the clumps of grains are rarely more than 2μ in diameter.

The coating of the emulsion on the surface of the mosaic screen is a very difficult operation. The emulsion film is easily detached by simple pulling when dry, or if the gelatine is much swollen by prolonged immersion in very alkaline or warm solutions. Very great care is therefore necessary in manipulation. Finally, it must be expected that plates or films which have undergone so many processes should show some small defect from time to time.

The number of coloured grains is between 3,750,000 and 4,370,000 per sq. in., and as the green grains are less transparent than those of other colours[1] they are always more numerous.[2] In spite of the precautions taken to mix intimately the three kinds of grain, it is not possible to avoid clumps of several grains of one colour. These clumps are sometimes visible when an Autochrome plate is examined under a moderate magnification (in the stereoscope or in the lantern, etc.), whereas the individual grains are only visible under the microscope.[3]

The average transparency of the completed

[1] We take the Autochrome plate as an example of plates and films with an irregular mosaic, the same remarks applying, unless otherwise stated, to other similar preparations.

[2] Potato starch was chosen because of its transparency and because of the almost spherical shape of its grains. In the bulk, grains of all diameters up to about 60μ are to be found; after separation, effected by floating, about 1 per cent becomes available.

[3] In the Agfa plates and films the mosaic is formed of grains of a plastic material which when pressed under heat come into full contact, so that no interstices have to be filled up. Owing to the greater transparency of the material used, and to the absence of carbon, the mosaic is rather more transparent than that of the Autochrome.

[4] The edges of these bands may sometimes be seen in the sky or in the whites of over-exposed plates.

[1] The table given below shows, according to microspectroscopic measurements (E. J. Wall, 1907), the spectral limits of transparency of the three kinds of grains, and, according to photometric measurement by diffused light (J. Thovert, 1924), the average transparency of these grains for the rays they transmit.

Grains	Blue-violet	Green	Red
Spectral limits of transmission .	up to 5,000 A.U.	from 4,900-5,700	beyond 5,700
Maximum of transparency . .	4,650	5,250	6,200
Average transparency	56%	30%	52%

[2] The proportion of grains of the various colours is between the following limits (W. Scheffer, 1908; J. Thovert, 1924)—

Blue-violet, 30 to 35 per cent. Green, 40 per cent. Red, 30 to 25 per cent.

[3] Counts of clumps made with 40,000 grains (C. E. K. Mees and J. H. Pledge, 1910) have given results agreeing substantially with those indicated by calculation of probabilities for an infinite number of grains.

Number of grains per clump . .	17	16	14	13	12	11	10	9
Number of clumps found . .	1	1	3	4	5	11	2	29
Number of clumps calculated .	–	–	1	2	5	11	32	100

mosaic, measured by white light, is about 10 per cent under the most favourable circumstances.[1]

886. Principles of Autochrome Colour Photography. The mosaic screen, neutral grey when seen by transmitted light, appears white when illuminated by a sufficiently strong light, and if surrounded by a wide opaque border. If, on a portion of the plate, a deposit of silver of uniform density is superposed on all the grains of the screen, there will appear, under the above conditions, and by contrast with the "white" of the naked screen, the sensation of a neutral grey—darker as the silver deposit is denser. The complete masking of the blue grains, for example, in a given part of the mosaic gives the illusion of a continuous yellow tint as a result of the addition of the light transmitted by the green and red grains, while the complete masking of the blue and green grains will yield a pure red. The complete masking of the blue grains and the partial masking of the red grains will give a yellowish-green. The partial masking of the green and red grains will produce a sky blue by mixture of the green and red lights, transmitted at reduced intensity and of blue light, transmitted at full intensity. Finally, the complete masking of the blue and red grains and the partial masking of the green grains will give a dark green.

In order to obtain by this process the reproduction in colour of any subject, the Autochrome (of which we assume for the moment that the emulsion is capable of darkening equally under the three kinds of grains illuminated by white light) must be exposed in the camera with its back (bare surface of the glass or film) turned towards the lens, so that the light from the lens does not reach the emulsion until it has passed through the mosaic screen formed of the coloured starch grains.

The light from a yellow object is absorbed by the blue grains, but passes freely through the green and red grains, bringing into developable condition the crystals of silver bromide behind these grains. Similarly, the light from a red object is absorbed by the blue and green grains, but can pass the red grains, and bring the emulsion into developable condition behind such red grains.

Under these conditions, if the plate were developed and then fixed, a yellow object would be rendered as blue-violet, a red object by a greenish-blue, which is a mixture of the lights transmitted by the blue-violet and green grains, the image being thus a negative not only in respect of its luminosities (a black being rendered as white, and inversely), but also as regards its colours.

If, after development, the image is reversed (§ 442) by dissolving the reduced metallic silver and re-development of the residual silver bromide, a positive image is obtained in which each colour of the subject is correctly reproduced if the exposure and development have been correct, the colour at each point being complementary to that which would have been obtained if the plate had been fixed after development.

887. Compensating Filter. The ideal orthochromatic quality that we have assumed to be possessed by the emulsion does not usually exist, and so it becomes necessary to compensate for the differences in the spectral sensitiveness of this emulsion by a compensating filter used at the time of exposure. For work in average daylight, this filter must absorb the ultra-violet[1] and the extreme violet, and reduce the blue and green rays (except the blue-green corresponding with the minimum sensitiveness of the emulsion). These requirements are satisfied by an orange yellow filter, which is usually made by a suitably proportioned mixture of a yellow dye (absorbing the violet and reducing the blue) and by a pink dye (weakening the green).

When a compensating filter is used with a film with a tricolour mosaic of either irregular or regular pattern, it should preferably be placed in front of the lens. Except in the case of lenses of ultra large aperture, any adjustment of the focussing, due to the fact that the back surface is in the plane normally occupied by the emulsion surface, is generally unnecessary owing to the base being sufficiently thin to be negligible.

When using plates with a tricolour mosaic, the necessity for exposing the plate through the glass causes a difference in the focus obtained

[1] A three-colour screen cannot transmit at the most more than about 16 per cent of the incident light, since a green filter can never transmit more than 33 per cent of the whole of the green rays and since the green elements cannot occupy as much as half of the total area of the screen without lowering below 16 per cent the total transmission of the other filters (C. E. K. Mees, 1910).

[1] Reflections from water surfaces are often rendered by a blue which is more intense than the blue of the sky. This effect is due to the predominance of ultra-violet in the reflected light (G. E. Whitfield, 1920). It can be avoided by using a filter which completely absorbs the ultra-violet, e.g. a colourless aesculine filter may be added to the normal compensating filter.

for any other sensitive material, and this is particularly inconvenient with hand cameras in which focussing is done by scale. Fortunately, it is possible to compensate for the reversal of the plate by placing behind the lens (after focus-

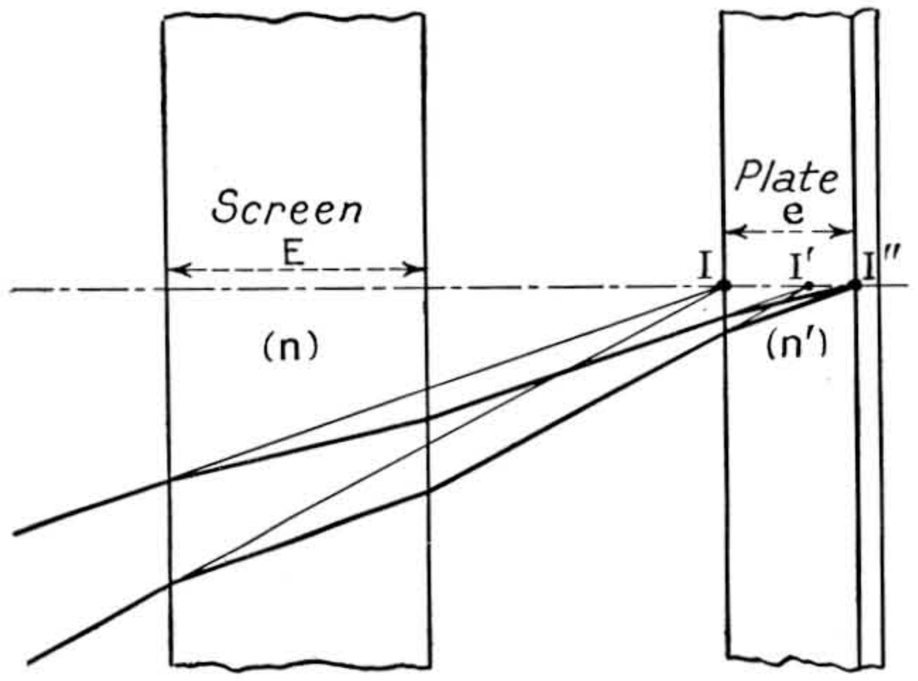

FIG. 219. ACTION OF LIGHT-FILTER IN AUTOCHROME PHOTOGRAPHY

sing as for an ordinary plate) a filter which is twice the thickness of the plate.

If, in the beam forming a sharp image at I (Fig. 219), we place a sheet of glass of thickness E and with parallel sides, the sharp image will be removed to I'. By placing a sheet of glass of thickness e and parallel sides in a position parallel to the first glass and such that (in the absence of the first) the sharp image I would be formed on its front surface, the sharp image will be removed from I' to I''. If the two glasses have the same index of refraction 1·5, the condition[1] for I'' to be formed on the rear surface of the second glass is $E = 2e$.

Various other methods have been devised for ensuring the automatic correction of focus in the few cases where the construction of the camera does not permit of easy access to the back of the lens for placing in position and removing the colour filters. Among these are special dark slides which bring the front of the plate about 1 mm. in front of the plane where the image would be formed in the absence of the plate, or the use of filters with surfaces worked so as to form a very slightly divergent system (E. Wandersleb, 1907).[1]

887a. The Use of Artificial Lights. As with three-colour work, Autochrome photography may be done with any artificial light of the same *qualitative* composition as daylight, i.e. including almost all the visible rays, their relative proportions being immaterial.

By using with artificial light the same compensating filter usually employed with daylight, a faithful reproduction will be obtained of the colours of the subject at the time the photograph was taken—a very different appearance from that of the same subject illuminated by daylight. A white surface illuminated by an incandescent lamp seems white, just as in daylight, but appears yellowish or orange if we are able to compare it, at the same time, with an identical surface illuminated by daylight (or by artificial light which has been given the quantitative composition of daylight by use of a blue compensating filter). At the same time, the blues become dark grey, the light greens become yellow, and carmine becomes vermilion. These falsifications of colour by uncorrected artificial lights are, of course, well known.[2]

It is possible to imagine the use of correcting filters serving to bring the composition of the artificial lights used to that of daylight, such a filter being superposed on the normal compensating filter when taking the photograph, or superposed on the picture when it is being viewed. When we remember that the normal compensating filter for Autochrome photography in daylight absorbs blue-violet chiefly, the lack of which in artificial light is compensated for by the correcting filters absorbing green and red, it is clear that the superposition of the two filters will absorb the major portion of all the spectral rays, thus greatly increasing exposure.

[1] It is known (§ 118) that the displacement of the sharp image due to the introduction of a glass of thickness E and index n is equal to $II' = E\,(n-1)/n$; under the same conditions, $I'\,I'' = e\,(n'-1)/n'$. The correction of the focussing is therefore ensured if

$$E\,\frac{n-1}{n} + e\,\frac{n'-1}{n'} = e$$

which condition, when $n = n' = 1{\cdot}5$ (mean refractive index of glass), comes to $E = 2e$.

[1] In the case of a lens of 6 in. focal length (within about 3 per cent) a filter forming a divergent lens of 53 in. focal length automatically ensures the necessary correction when placed in front of the lens; the over-correction does not amount to 0·15 mm. (1/170 in.) when the object comes as close as about 13 ft. from the camera. This error is less than that due to the variations in the thickness of plates.

[2] A simple experiment serves to demonstrate the *subjectivity* of colours. If two lamps are placed side by side, one naked and the other fitted with an orange filter of sharp cut (e.g. a trough containing a strong solution of sodium bichromate), so as to throw on a sheet of white paper the shadows of the same object, the paper will appear white and the shadows respectively grey and green, whereas in reality the paper is then yellow and the shadows respectively brown and grey.

On the other hand, if a correcting filter is superposed on the completed Autochrome, its already poor transparency will be still further reduced. For these reasons, it is necessary to use a special filter for each kind of artificial light,[1] so that the light transmitted through that filter produces equal densities of the emulsion through the three kinds of grains of the mosaic screen.

According to the light with which they are to be employed, these compensating filters are of a less orange-yellow than the normal filter, and sometimes even of a greenish-yellow. They are always very much less absorbent than the normal filter.

888. The Dufaycolor Process. The screen of the Dufaycolor films is formed of equidistant parallel red lines, 20 to the millimetre. Between them, green and blue-violet squares alternate at the rate of 20 squares of each colour per millimetre. This regular screen is obtained as follows: The base is first coated with a very thin layer of collodion dyed blue; afterwards a set of greasy ink lines is printed at an angle to the length of the roll; in the next operation the dye between the ink lines is bleached, and a second dye bath results in the clear space being coloured green. The ink lines are now removed and a second set printed at right angles to the first. A second bleaching bath now removes the green and blue dyes where there is no protective cover of ink. In a final bath, these clear spaces are dyed red, and lastly the ink lines are removed. In each of the two rulings the thickness of the lines is such as to equalize approximately the areas of blue, green, and red.

On top of the reseau, to protect it, there is a very thin layer (about 1 μ) of varnish, thus avoiding any effect of parallax, and then a coating of a special very highly sensitive panchromatic emulsion. The varnish used forms an insulator and very effective substratum for the emulsion, which has no tendency to come away, even in baths of 75° F.

The individual elements of the screen are certainly much larger than the grains of an irregular mosaic, but there is no massing of elements of one and the same colour, and the structure of the image becomes apparent only in the case of projection on a very much enlarged scale viewed too closely.

[1] No compensating filter at all is needed, whatever the light, if, instead of proceeding to reverse the image, it is fixed after development so as to obtain a negative, which is then copied in the camera, this intermediate negative being illuminated by the same light as was used for taking it (E. Cousin, 1913).

889. Exposure. As in all cases where a very thin coating of emulsion is used, and particularly where reversal is carried out, the exposure lies within very narrow limits.

Whereas in monochrome photography, where there is a fairly wide latitude in exposure, the exposure is usually timed for the shadows, since over-exposure of the high-lights is rarely a source of failure, in Autochrome work, however, the exposure needs to be for the high-lights of the subject (the sky excepted, which must be shielded during exposure by one of the means mentioned in § 125, but not graduated yellow filter).

Photographs taken in dull weather show less strong colours than those taken in sunshine, and give a better rendering of aerial perspective, but the exposure must be proportionately longer when the subject is not so strongly lighted.

In using an actinometer, allowance must be made for these peculiarities, especially as regards decreasing the indicated exposure when exposing in very bright light and in increasing it in bad light. When taking ill-lit interior views it is often necessary to double the exposure calculated on the basis of the exposure necessary for a sunlit landscape.

890. Display and Projection of Colour Screen Plates and Films. Plates and films intended for direct inspection must be placed in passe-partout mounts with wide, dark margins to mask the surroundings, which by their much greater brightness would cause the image to appear very dark.

The dyes used for staining the elements of the mosaic or of the reseau cannot stand the action of direct sunlight indefinitely. It is therefore necessary to avoid exposing colour plates or films at a window, except one facing the north.

Various devices enable colour plates or films to be examined under suitable conditions. We may mention the wallet-like viewing cases and the illuminated frames.

The viewing cases have a frame, with adapters in which the plate or film (mounted between two sheets of glass) can be placed in a plane inclined at about 45°, and connected by a bellows to another frame containing a mirror placed horizontally. The observer looks in the mirror within this kind of box with black walls, and sees the reflected image of the plate or film illuminated by daylight or by a lamp.

The illuminated frames have at the back of the frame receiving the transparency, a diffusing surface (white paper, matt, opal glass, or

aluminium roughened by a sand-blast) illuminated sideways by tubular-shaped lamps hidden from the view of the observer.

When a colour screen plate or film is lighted or projected by artificial light, it is often of advantage, at least in a room which has no other light, to absorb the excess of red in the light used by means of a very slightly bluish filter, of which the depth must be ascertained by trial.

The projection of colour-screen plates or film requires a very powerful light-source. As these images absorb a great deal of light, they become heated very rapidly and would soon be destroyed through softening of the varnish which holds the coloured starch grains in position. Each plate must therefore remain only a short time in the beam of light.

As far as possible, the practice of alternating colour and monochrome slides during a lecture must be avoided. The latter are far more transparent, and cause a dazzle effect, which makes the colour slides following them appear much darker. If it is impossible to avoid showing monochrome slides, they may be bounded with old colour-screens from which the silver image has been removed, thus making them darker. It is, however, simpler to show first of all the monochrome slides and then the colour-screen image or vice versa, the power of the light being reduced for projecting the monochrome slides.

891. Monochrome Negatives from Colour Screen Transparencies. It may sometimes be necessary to obtain black and white prints, same size or enlarged, of a subject of which only a colour screen transparency is available. A negative may be made by contact printing, preferably on a panchromatic plate with a yellow filter balancing about equally the lights transmitted by the three kinds of starch grains in an area corresponding to a white part of the image. But (especially when enlargements are made) such a negative always shows somewhat marked granularity in the images of objects in bright colours, owing to the masking of the grains of one or two colours.

This granularity is avoided and at the same time the outlines are softened by copying the transparency in a camera by the Artigue two-plate method (312), the composite negative thus obtained from an autochrome being capable of enlargement up to 5 times (L. Gimpel, 1923). The granularity of a contact negative may also be reduced by copying or enlarging it by one of the methods described in § 313.

892. Duplicate Colour Screen Transparencies. For the reproduction of images with a regular or irregular tricolour mosaic on similar plates and films it is advantageous to use specially prepared originals, denser and more contrasty than those best suited for direct viewing or projection, obtained by normal exposure and a somewhat curtailed first development. The difficulties of reproducing colour-screen transparencies are due on the one hand to the structure of the image, and on the other, to the faulty saturation of the colours.

Let us take, for example, the image of a red object. On a certain area of this image there may be, for instance, 300 uncovered red grains and 600 masked grains (300 green grains and 300 blue grains). If a sharp image of this plate is obtained on a second plate of the same nature, it is probable that owing to the distribution of the grains according to the laws of chance, of the 300 red grains only 100 will be projected on to the red grains in the second plate; the remaining 200, being projected on to green and blue grains, will not be recorded, and the final image will thus be composed of 100 red grains and 800 black grains, so that it is considerably darker than the original image. This darkening is easily remedied by introducing a certain degree of diffusion into the images (use of an incompletely corrected lens or imperfect focussing when copying is done in the camera; faulty contact and use of a comparatively large source of light, when copying is done by contact printing).

If a chart made of filters of pure, saturated colours is reproduced by a colour screen plate or film, it will be found that, despite the brilliancy of the copy, its colours are diluted with a certain amount of white light. This fault of saturation is obviously magnified in the course of copying the first transparency.[1] If, in spite of the large amount of white light they transmit, the colours of the colour-screen plates and films appear to be saturated, this is due to

[1] Spectro-photometric measurements by A. von Hübl (1909) have given the following proportions of black, of pure colour, and of white for successive images of a blue filter—

	Black	Pure colour	White
Original blue filter . .	16%	84%	—
Autochrome reproduction	18%	59%	23%
Reproduction of the above Autochrome . .	20%	46%	34%

the fact that the opacity of the mosaic screen only allows them to be seen in weak light. Now, it is known that a coloured paper always appears of more intense colour in the shade than in the sunshine.

This loss of saturation is, moreover, not the same for all colours. It is most marked with yellow. If it were the same for all colours, it could be remedied by intensification, but this treatment would darken unduly the colours which are sufficiently saturated.

This phenomenon is due, at least partly, to diffusion and refraction within the starch grains and to irradiation within the layer of emulsion. The image of a red object, which, during the first development, should be limited to the parts of the emulsion situated behind the red grains, impinges on the adjacent parts. After reversal, the grains partly uncovered near the red grains will therefore transmit some green and blue light. In the case of the image of a yellow object, this spreading effect is even more marked, for the blue grains will be partly uncovered both near the red grains and near the green grains. These same causes would appear to lighten in the same degree the greenish-blue and the pinks, but these colours in a pure condition are found less often than pure yellows.

It will therefore be seen that while a colour screen transparency with vigorous tones and free from pure yellow may usually yield satisfactory copies, it is impossible to reproduce satisfactorily a colour transparency with soft tones.

893. The copying of colour screen transparencies on plates or films with a regular or irregular tricolour mosaic is done either in a printing frame or in a triple-body reproduction camera. The light must generally be filtered.

Excessive sharpness must be avoided; it is desirable that the image of each element should spread over some elements of the screen of the sensitive emulsion. For copying by contact, a light source of considerable size will therefore be used, and possibly the surfaces of the two films may be separated by interposing a thin transparent sheet of film.

To reduce the loss of saturation of the colours it has been proposed to effect copying by utilizing, simultaneously or successively, three narrow spectral bands, each passing only the elementary filters of the same colour (G. B. Harrison, 1933; G. A. Raguin, 1933).

894. Colour Separation Negatives from Colour Screen Transparencies. Autochrome photography has considerably enlarged the field of application of three-colour work by enabling it to be used for various subjects such as landscapes and scenes in movement for which direct trichrome selection is practically impossible. It is, however, necessary to avoid the intermediary of a colour screen plate or film in all cases where it is possible to make the colour-selection negatives directly from the original. Still more is it necessary, for the reasons already stated (§ 906), to abstain from attempting a three-colour reproduction from a duplicate.

Three-colour separation from a colour screen transparency does not involve actual selection, but a sorting of the three selection images intermingled on the original plate. The employment of the normal selection filters would give only fairly bad results by adding up the defects of two successive selections. In order to utilize just as it is the selection already made by the elementary filters of the screen plate or film filters are employed which completely cut out two of the three intermingled images, and transmit the third. To ensure these conditions, the regions of transparency of the filters must be narrower than those of the elementary filters (§ 884, footnote) and must be included within the latter, or at least they must have a very marked maximum near the centre of transmission of the corresponding elementary filter.[1]

For *sorting out* the three images it is therefore sufficient to employ filters of which the spectral limits of transmission are, for instance—

below 4,800; from 5,100 to 5,700; above 5,900.

It should be noted that such filters are not suitable for selection proper.

895. The copying may be done with advantage in a printing frame, using a lamp fitted with a ground glass and, successively, with the three special filters (L. P. Clerc, 1907). The use of diffused light on the one hand, and of a very ample exposure on the other hand, reduces to a certain extent the granularity of the images.

It has been repeatedly suggested (L. Didier, 1908; J. R. Fuller, 1924) to obtain, under the same conditions, selection positives from a colour screen negative (a colour screen plate or film fixed after development), such positives being usable direct for synthesis by hydrotype print-

[1] Conversely, Autochrome films have been used for copying from selection negatives, using for each the corresponding separation filter; the inversion of the images is thereby avoided (M. Audibert, 1929; W. Chapman, 1929).

ing, or forming the prints required for photo-mechanical reproduction. But a drawback of this method is that it is impossible to examine the quality of the colour negative before copying it.

In cases where the copying is done in a triple-body camera with the colour transparency illuminated by artificial light, precautions need to be taken to avoid, during the long exposures necessary, any heating which may injure the transparency. A stream of air may be directed on to the latter by means of an electric fan.

The structure of the image can be almost completely eliminated without seriously impairing the sharpness of the image, by setting the camera very slightly out of focus.

CHAPTER L

AN OUTLINE OF CINEMATOGRAPHY

896. The Origins of Cinematography. The first attempts to show animated images made use of drawings representing the various phases of a simple movement presented successively to the eye, each during a very short moment of time, in the phenakistiscope of Plateau (1829–1833), and in its numerous variants, including the zoetrope, still manufactured as a toy, and the praxinoscope (E. Reynaud, 1877). In this latter, viewing at separate instants with comparatively long intervals is replaced by continuous viewing of the virtual images (which are relatively fixed) of the drawings placed inside a cylinder in rapid rotation. This is an optical method, the principle of which may be found in various modern cinematograph apparatus in which the film travels with a continuous movement.

A physiological process, which has not been explained, and in which the persistence of luminous sensations on the retina is partly involved, results in the spectator feeling the sensation of a continuous displacement of the moving parts of the image if the images follow each other at the rate of at least 16 per second.

As soon as photography permitted subjects in movement to be recorded, numerous investigators endeavoured to replace the diagrammatic drawings of the phenakistiscope by photographs, and to project these photographs, still limited to a very few phases of one given movement, on a screen.

For his studies of the physiology of movement, J. Marey was led, about 1887, to record a very large number of images on paper film, and, later, on film in long strips. His attempts to project the images thus obtained were fruitless, because of the unequal spacing of the pictures in the strip. In 1891 Edison produced his Kinetoscope, which enabled a single spectator to see an animated picture lasting about 30 seconds, and recorded on an endless band of film provided with marginal perforations through the medium of which it was moved by toothed wheels. It was, however, impossible to project these images, each appearing only during a very short fraction of the interval of the time between the viewing of two images.

In the meantime animated projections of scenes lasting about 15 minutes had been shown to the public (Théâtre optique, 1889–1900) by E. Reynaud, but the strips used, while provided with perforations for travel and register, were coloured drawings on transparent films—forerunners of the animated drawings often seen in cinema shows.

It may be said that from 1892 the question of the projection of animated photographs was already "in the air." Attempts were made in England by Friese-Greene, in the United States by Jenkins, and very numerous patents were taken out at that period for apparatus which was never manufactured. It was given to MM. A. and L. Lumière to produce in 1895 the first "cinématographe" with periodic stoppage of the film[1] permitting alternately the taking of the views, the printing of the positives, and their projection. It is also to them that the first public cinematograph performances are due. They succeeded in obtaining perfection at the very outset, as has been shown during recent years on occasions when their first films have been projected.

897. Cinematographic Film. The standard cinematographic film, the only one in general use for commercial and scientific work, carries pictures (or "frames") each measuring 18 × 24 mm. (approximately $\frac{3}{4} \times \frac{15}{16}$ in.), of which the short side is placed vertically, parallel to the edges of the strip, with spaces of about 1 mm. (1/25th in.) between successive frames. The width of the film strip is 35 mm. ($1\frac{3}{8}$ in.), the excess over the width of the frames being equally apportioned on either side and used for the perforations by which the film is moved. There are four perforations in each of the margins of each frame. The standard-size negative film is always made with a celluloid base. The standard-size positive film is made either with a celluloid base or with a base of cellulose acetate which is practically uninflammable, the use of the latter is to be compulsory in France for

[1] The intermittent movement of the film is usually ensured in cinematograph taking cameras by claws worked by cams. Auxiliary claws hold the film still while it is released by the motion claws. In projectors, the movement of the film is nearly always effected by a toothed drum with intermittent rotation governed by a "Maltese cross" mechanism.

public entertainments. Standard-size film is usually supplied in lengths of 200 and 400 ft.

Besides standard-size film, amateur cinematography and educational films employ various films of reduced, sub-standard size. These are usually made with a cellulose acetate base,[1] and such of them as are specially intended for amateur use are coated with a reversible emulsion, so as to avoid the somewhat high cost of printing a positive.

898. Cinematograph Cameras. With the exception of certain amateur instruments which, with various additions, can be used for taking views, printing them, and projecting them, cinematographic apparatus is highly specialized, and among the cameras exclusively intended for taking views, three classes may be recognized at the present time—

(*a*) Apparatus for drama subjects, comprising numerous accessories for such effects as the gradual passage from one scene to another, double exposures, masks, vignettes of increasing or decreasing size, etc. These cameras are always used on a rigid stand, often fitted with a panoramic head.

(*b*) Cameras for record and scientific cinematography, topical films, etc. These differ from the preceding only by the omission of the special accessories for scenic effects. These cameras are generally used on a stand,[2] but some of them may be held in the hand or suspended from the operator's body by straps, being driven by a motor (spring motor, compressed air motor, etc.).

The normal taking frequency for cameras of these two classes was, for a long period, 16 frames per second (reduced to 14 for 9.5 mm. film). The necessity for giving to sound recording a length of about 455 mm. per second has led to the normal running speed of 35 mm. film being raised to 24 frames per second. The handle of these cameras may be placed on the axis of one of the gear wheels, so as to record one frame per turn of the handle.

(*c*) Cameras for speed cinematography, used at the rate of about 240 frames per second. The resulting films, when projected at the normal rate (the called slow-motion projection), magnify the periods of time and render possible the analysis of movements which cannot be studied under normal conditions.[1] The mechanism of these instruments is very different from that of ordinary cameras, which, if worked at such speeds, would tear the film and would soon be damaged.[2]

These instruments must be used on extremely rigid stands, to prevent the vibrations of the mechanism from causing a general tremor of the camera.

All these cameras may be actuated by an electro-motor run either by current from the mains, in the case of studio instruments, or by means of a set of accumulators, in the case of cameras used out of doors. Devices have been made for actuating the camera from a distance, especially in the case of the cinematography of wild animals in freedom.

Just as any rapid phenomenon can be slowed

[1] Except especially for films made by slitting standard-size celluloid film in two along its median line.

The table at foot of page gives the dimensions of the various sub-standard sizes actually in use for amateur cinematography and for educational films.

On sound films, the space reserved for the sound track leads to a slight reduction in the dimensions of the images; on 16 mm. film, however, the sound track takes the place of one of the two marginal rows of perforations.

[2] Special shock-absorbing supports have been made for the use of cinematograph cameras on vehicles or aircraft. Suspensory supports with checked oscillations have been used for work on board ship.

[1] In Germany these cameras have been given the picturesque name of *Zeitlupe* (time magnifying glass).

[2] We may mention the chronophotographic cameras with speeds of 4,000 frames per second, such as the Heape & Grylls apparatus, weighing 4 tons and used by the British ordnance for artillery studies.

	Standard film	American school film	"Rural" film	Slit standard film	American amateur	"Baby" film	"Eight" film
	mm.	mm.	mm.	mm.	mm.	mm.	mm.
Frame size	18 × 24	14·5 × 19·5	9·5 × 13·5	9 × 12	7·5 × 10	6·5 × 9	3·75 × 5
Width of the film	35	28	17·5	17·5	16	9·5	8
Distance between homologous points of successive pictures	19	15	9·5	9·5	8	7·5	4
Factor of utilization	65%	68%	77%	65%	58%	82%	57%

The factor of utilization shows the fraction of the total film area occupied by the picture.

to any desired degree to enable it to be analysed, so also a slow phenomenon, difficult to perceive on account of its very slowness, such as the germination and growth of a plant, the evolution of glaciers and other geological changes, can be condensed into a very short space of time if the cinematograph record is taken at long intervals (such as an hour, a day, according to the more or less slow character of the phenomenon it is desired to represent), projection being effected at the usual speed.

899. Film Boxes. The unexposed film is loaded into the cameras in full daylight by means of removable boxes having, as a rule, a capacity of 400 ft. of film. These boxes, having served as suppliers of film, are then used as receivers of the exposed film.

The film boxes and the manner of placing them in the camera vary with different makes, so that only general rules can be given. In all cases where it is necessary to wind the film on a core special to the film box used, this winding must be done in a room free from dust, on a winder in perfect condition, avoiding too high a speed and excessive tension, which will produce static (§ 242) or friction markings (§ 199). The film box must be carefully cleaned before placing the spool of film in it, special attention being paid to brushing the velvet strips which maintain the light-tightness of the slot through which the film passes.

When placing a box in the camera, of which the film channel and the various parts have been cleaned, it is usual to have a length of 20 to 30 in. of film projecting from the box.[1] Its end is cut into a point, and it is first led over a supply drum and then into the film channel, where the claws engage the perforations, then on to another drum, a loose loop being left between the channel and each of the drums (some cameras have only one drum which both sections of the film pass over, covering an angle of about 120 degrees), and finally on to the core of the take-up box. By giving the handle a turn, it is seen that the film is correctly threaded and the take-up box and camera are then closed.

900. Exposure and Regulation of the Stop. Under the usual conditions under which cinematography is practised, the rate at which the pictures are taken strictly limits the duration of exposure, each cycle of the mechanism not allowing the exposure to be longer than two-thirds of the cycle, that is about 1/24th second at the maximum (and often only 1/32nd of a second) for films taken at the speed of 16 frames per second, and 1/40–1/50 second for films at the rate of 24 frames per second.

The shutter is usually formed of two or three discs with cut-out sectors, which can overlap, leaving an open sector of variable angle, which in some cameras is as much as 240°. In simplified instruments, the shutter often has a fixed opening of 120°, and the regulation of the amount of light to be passed to the emulsion can then be made only by the lens stop, which thereby plays a part quite different to its normal one in photography, where it should be used only for the purpose of regulating the depth of field, unless the lens is fitted with a neutral-grey screen of appropriate density, either alone or combined with a light-filter.[1]

901. Taking the Pictures. It will be noticed that at the rate of 16 frames per second, the rate of turning of the handle is equal to that of the " quick step " (120 paces per minute). For this reason some operators hum a march tune as a help in keeping time when taking a view.

For turning the handle, the forearm must be nearly motionless, the hand turning round the wrist and not the forearm round the elbow. In general, the camera is supported with the left hand while the right hand turns the handle, that is, unless the left hand is employed in adjusting the panoramic head or the swing around a horizontal axis, both of which operations are better done by an assistant.

A fault common to new operators is to exaggerate the duration of scenes in which there is no real movement (landscapes, seascapes, etc.); a duration of 15 seconds, that is, 30 turns of the handle, must be regarded as a maximum.

It therefore very often happens that scenes with different lighting are recorded on one film, the limits of each scene being marked by a perforator actuated from outside the camera, so as to permit of each scene being developed separately according to its contrast. It is advisable to take at least 20 in. (or about 3 turns of the handle) more than the strip to be used, if it is wished to cut off pieces of film for development tests without encroaching on the scenes themselves. If it is desired to remove the exposed film at once, it is necessary to turn off

[1] Sub-standard films are generally provided with leaders and tracers of opaque paper on which the perforations are continued to avoid a loss of film when loading and unloading the camera.

[1] The use has been suggested of auxiliary stops with slats to regulate the illumination without influencing the depth of field.

about 3 ft. extra of blank film (about 6 turns of the handle) in order to be sure that the last useful pictures have entered the receiver.

In amateur cinematography with reversing film, which leaves only little latitude in the choice of the duration of exposure, it is necessary to avoid photographing on one and the same film scenes of very different character, or even scenes with notably different lightings, unless an exposure meter is used for determining the "exposure," i.e. the stop to use.

902. Various Manipulations. Except in the more and more frequent cases when the negatives are developed in continuous machines, as is almost always the case with positive film, development is carried out on frames or drums. The frames on which the film has been wound are completely immersed in horizontal or vertical tanks containing the various baths. Drums with a horizontal axis and on which the film is wound in helix form, dip in the baths only at their lower part and are turned at a uniform rate during the whole operation, the various parts of the film thus dipping in the liquid only at intervals.[1]

When a preliminary development test is made on a piece of film, it must be remembered that differences in the speed of development result from differences in the renewal of the liquid around the film due to differences in the movement of the film in the bath. It is therefore necessary to ensure that development of the test piece is carried out under conditions as little different as possible from those attending the actual development of the film.[2]

903. Drying the Film. The film must be freed from adhering water before drying, either by wiping with moist cotton-wool or with a wash-leather, or by drawing it between rubber squeegees, or, again, by blowing with compressed air. This is necessary to avoid the presence of drops of water, which will give rise to markings.

Drying must be done at a low temperature (68–77° F.) in comparatively damp air (75 to 80 per cent) to avoid excessive tenderness of the gelatine and also permanent distortion of the film, which would render its employment difficult.

The film, which expands slightly in the baths, contracts on drying, its shrinkage varying from 0·05 per cent to 0·2 per cent, according to the nature of the base and the drying conditions. This shrinkage increases with age and can exceed 1 per cent, especially if the film is stored in a very dry atmosphere.

904. Titles. The various scenes of a film are generally preceded by titles and sub-titles, printed from type or made from drawn designs, occasionally combined with still or animated pictures.

To enable titles to be read satisfactorily, it is usual to allow 4/5ths of a second per word, or 10 in. of standard film, with a minimum of 20 in. per title.

These titles are generally taken, by means of a special camera, on positive film, by copying opaque texts illuminated by reflected light, or transparent texts illuminated from behind, either in diffused or "directed" light.

To avoid dazzle, titles are always projected with white letters on a black ground. The films for them are obtained either directly or by printing under a negative taken under appropriate conditions.

905. Joining Negatives. To permit automatic printing and development of the positive film and to avoid the joins in it which are sometimes the cause of trouble during projection, the negatives of the various scenes are generally (after trial positives have been printed, examined, cut, and assembled) joined by cementing into one single negative film.

906. Printing of Positives. Cinematograph films are printed in machines with an intermittent action, the printing being done frame by frame,[1] or in continuous printers, the negative and positive passing together behind a slit, the opening of which adjusts the duration of exposure.

Before printing, a test is usually made to ascertain the working conditions which will give the best result. This test is indispensable when development is carried out for an almost fixed time, as is the case with certain types of continuous printers. In modern installations, use

[1] Before use again, the frames, and drums are cleaned by successive treatment in a 0·1 per cent solution of potassium permanganate, pure water, and then in a 2 per cent solution of sodium bisulphite, followed by a further washing.

[2] Photometric measurements made by L. A. Jones (1922) with a very large number of negative films of good quality and various origins, gave, as an average figure for emulsion fog, a density of 0·2 (opacity, 1·5, i.e. a transparency of 66 per cent), and, for the difference between the extreme densities, 0·8 (equal to a proportion between the transparencies of about 1 : 6·5).

[1] Printing is usually done by contact, except in the case of sub-standard films for home projection, which are obtained by printing from standard negative film in printers designed in the manner of the triple-body copying camera.

is made for this purpose of automatic testers, which afford about 10 frames of each scene, each with a given exposure such as may be obtained by inserting suitably graded resistances in the circuit of the lamps.[1]

After ascertaining the best conditions, the negative is usually nicked on its edges, at a point marking the common limit between two scenes, the passage of these nicks releasing in the printer a mechanism which automatically adjusts the intensity of the lamps (intermittent printers) or the duration of the exposure (continuous printers).

Trial positives and small numbers of film lengths are developed under the same conditions as described for negatives. The developed, fixed, and washed films are sometimes subjected to various toning processes or to general tinting.

907. Storage and Maintenance of Positive Film. Films cannot retain the necessary flexibility, especially after the considerable heating which they undergo when projected,[2] unless they are kept, when not in use, at as low a temperature as possible and in comparatively moist air. They can with advantage be placed from time to time in a moistening box, i.e. a box with a perforated double bottom. In the upper compartment is the film, loosened into a slack coil, and in the lower compartment, a container filled with water or with wet pads.

Before using a new film, it is advisable to put paraffin wax on its edges, an operation which is performed by special machines. Through the combined action of heat and friction, the wax is sufficiently softened to form a lubricant which decreases the resistance to the passage of the film through the projector. This is very necessary, as the gelatine of a new film still retains a fair amount of moisture, and therefore is liable, when passing through the gate, to form lumps which give rise to scratches and which brake the film and thus can cause the toothed drums to cut the perforations.

Scratches on films which have been much used, and carelessly, give a very unpleasant *effect of rain* to the picture on the screen. This effect can be reduced, either by applying a matt or clear varnish, or by soaking the film in tepid water or in reagents causing a swelling of the gelatine.

Many of these scratches are produced during re-spooling by grains of dust imprisoned between the coils. Transverse scratches appear also when attempts are made to flatten, by knocking edgeways on a table, an irregularly wound spool in which the edges of the windings are not level.

After passing a number of times through an over-lubricated projector, a film is often bespattered with oil and must be cleaned. There are special machines for this cleaning, usually employing carbon tetrachloride, which is a non-inflammable solvent. This liquid sometimes contains traces of sulphur chloride which may attack the film if the latter is re-spooled before complete evaporation of the cleaner. This risk is avoided by using tetrachlorethylene.

Each time re-spooling is done, the joins should be inspected and re-cemented, if necessary, as a partly-lifted join can cause the film to tear.

908. Flicker. In early models of projectors, the luminous beam was cut off only during the time required to replace one frame by another, so that there were 16 dark intervals per second. The flicker due to these alternations of light and darkness are very unpleasant, and even fatiguing. Trial of various means has shown that flicker can be reduced only by increasing the frequency of the dark intervals, and this has led to the use of shutters with two blades, one serving to mask the film while it is being shifted, and the other solely to reduce flicker. Flicker becomes more apparent according as the screen is more brightly illuminated, and the great increase in the power of the illuminants employed of late years has again brought forward this question, which has not been solved by the many attempts to use shutters with translucent blades.

It has been clearly shown by K. de Proszynski (1911) that the necessary and sufficient condition to eliminate flicker, when the brilliancy of the screen is very large, is to increase the number of light interruptions to about 50 per second, these interruptions being of equal duration and uniformly spaced.

909. Cinematograph Projection. It is not possible to deal here, even summarily, with cinematograph projectors, nor with their manipulation and attendant necessary precautions, the chief of which latter are, moreover, compulsory by official regulations.

We may however mention that in addition to projectors intended for picture theatres, there

[1] It should be noted that this causes a variation in the *colour* of the light as well as in its intensity.

[2] In addition to the excessive desiccation of the gelatine, this heating tends to volatilize the slightly volatile solvents, or "plasticizers," which it is necessary to retain in the base in order to cause it to keep its suppleness.

are many patterns, of a more or less simplified type, intended for educational purposes (school models usually include arrangements for stopping the film at any given frame, at the will of the lecturer, so as to permit details to be examined), for commercial purposes (portable projectors for commercial travellers), and for home projection.

Whatever the projector used, it must be constantly maintained in an absolutely clean condition, and the various parts which come in contact with the film must be periodically examined with care, so as to permit the replacement, in time, of worn parts likely to *mutilate the film*.

This examination should be directed particularly to the toothed drums (worn teeth tend to cut the film), take-up rollers, guide rollers, pressure rollers (jamming of the rollers preventing their rotation, non-parallelism of their axes with those of the drums, faults of alignment of the various rollers and drums), pressure springs of the film guide (unequal or excessive pressure),[1] the take-up mechanism of the film (excessive friction of the clutch discs causing a great tension on the lower supply spool), the intermittent mechanism (play in the intermittent drum, wear of the plateau of the Maltese cross, and on the supply and take-up spools (warped flanges)).

After showing the film, it must be re-spooled so as to be ready for projection again.

910. Stroboscopic Illusions. It is of somewhat frequent occurrence that during the projection of scenes, including rotating objects in motion (carriage wheels, fly-wheels, gears, etc.), these parts seem to be turning at a speed very different from their normal speed, or seem to be at rest, or even to be turning in the opposite direction.

We must first of all note that this illusion manifests itself only in the case of perfectly symmetrical wheels; it disappears as soon as any given point can be followed (counterweight of a fly-wheel, spot on the rim or on one of the spokes).

If the picture has been taken at the frequency of 16 per second and one of the spokes has come (in this interval of 1/16th second) to take exactly the place of one of the other spokes (that is, if its angular displacement is some multiple of the angle α between two consecutive spokes), the successive images of the wheel will be identical among each other, and the wheel will seem motionless on the screen.

If the speed of rotation is very slightly higher, and if, for instance, the rotation is $n\alpha + \varepsilon$ during the time interval between two frames, the image will seem to have turned only through the angle ε in the normal direction. If, on the contrary, the speed is very slightly decreased, the angle of rotation being $n\alpha - \varepsilon$ during the time interval between two frames, the image will seem to have gone backwards through the angle ε.

[1] The pressure of the springs must be about 8 oz. on each margin. This can be tested on a sample of film cut in two along its axis; the film is introduced into the channel without letting it touch the conveying drum, but making sure that it is firmly held by the shoe of the brake, and the film is attached to a spring balance. The pull shown by the balance is noted at the moment that the film begins to slip.

CHAPTER LI

PHOTO-MECHANICAL PROCESSES IN BRIEF

911. Generalities. The various processes which are used on a commercial scale at the present time for the photo-mechanical reproduction of drawings in line or wash, paintings and photographic originals may be classified into three main groups—

Typographic or *letterpress processes*—among which are *line photo-etching* (i.e. photo-zinco), for the reproduction of originals in black and white without other tones; and *half-tone*, for the reproduction of all full-tone originals.

In the plates thus obtained the printing elements are in one and the same plane projecting above the base.

Surface processes—in which are included *collotype* and *photo-lithography*. In collotype the printing plate is a layer of gelatine on a suitable flexible or rigid support; in photo-lithography, printing is no longer done from stone but from a sheet of aluminium or zinc.

In the printing plates thus obtained, the image is usually in the same plane as the background, or at a slight depth below this background.

Intaglio processes—of which the sole survivor, at any rate on the commercial scale, is *screen photogravure*, in which printing is done from flat plates, or, in the rotary form of the process, from cylinders. In photogravure plates or cylinders the printing elements form minute cavities. Where the cavities are deepest the impression will be darkest.

Of these processes, the only ones applicable in the ordinary course to the illustration of letterpress set up in type are photo-zinco and half-tone. All such relief printing blocks may be reproduced in any required numbers by electrotyping; line blocks and half-tones of very coarse screen, as used in daily newspapers, may be reproduced in any required numbers by stereotyping.[1]

In the absence of special arrangements, blocks become the property of the customer of the photo-engraver and may be used for a large number of different publications.

[1] It is, however, to be noted that of late the practice has been growing of printing letterpress and reproductions of photographs at one operation by photo-lithography or rotary photogravure, e.g. for large editions of catalogues, illustrated periodicals, etc.

The collotype process, by which for many years almost all the view postcards printed on the Continent have been produced, is the most suitable for small editions of prints or inset plates. For an edition of 500 copies, prices compare favourably with those by other processes, provided that a sufficient number of originals are dealt with at one time to employ the machine at full capacity.

Photo-lithography has the advantage of allowing printing to be done on all kinds of paper, including those of common quality or pronounced texture. It is the process to be preferred for the reproduction of line originals in a limited edition. Under favourable conditions it may be used for full-tone originals, but only when a fairly large edition is required.

Rotary photogravure needs to be used for an edition of about 10,000 copies of an original in order to compete in price, and it is equally necessary that the whole surface of the etched cylinder should be filled with the reproductions. Smaller editions are sometimes printed from flat plates, but at a much greater expenditure of labour.

As a general rule, line and half-tone blocks are made by firms other than those that use them (photo-engravers and letterpress printers respectively). On the other hand, plates for collotype, gravure, and usually photo-litho printing, are used by the firms who prepare them. It is the exception for these plates to be kept, and they never become the property of the customer.

912. Line Etching. The production of a line block (i.e. zinco) comprises numerous operations, which are undertaken by workmen belonging to at least three branches of the trade, viz.—

(*a*) Making of the negatives by the wet-collodion process; sensitizing the metal (zinc, except for very special purposes) with bichromated albumen; assembling the stripped negatives on glass; exposure to light; inking the whole exposed plate; washing out in cold water; drying.

(*b*) Application to the image in greasy ink of resin powder of low melting-point; uniting ink and varnish by moderate heat; varnishing the

back and edges of the metal plate, and also parts of the front surface not occupied by subjects; if required, transfer of tints, in line or stipple, on to certain parts; treatment of the metal with a solution which causes it to repel greasy ink; rolling-up with highly fusible ink, followed by etching for a very short time in nitric acid. From this stage there is repeated the series of operations: rolling, dusting with resin, heating (during which the ink flows down the sloping sides of the unetched lines), and etching until depth enough for printing is obtained in the etched parts. Finally the plate is cleaned.

(*c*) Large areas to print white are cut away with a routing machine, the plate cut up as required by the various subjects, and perforated for pinning to wood of thickness to bring the surface of the metal level with that of the type in which it will be placed for printing.

913. It is out of the province of this book to deal with the making of originals for line blocks, but some hints may be given on the marking of originals to show the *scale* or the *size* of the reproduction and the use to be made of tints (stipple, hatching, or lines) over parts of the drawing.

As regards the scale of the reproduction, it is usual to mark the original with the exact size it is to be in the block, drawing a line alongside either the horizontal or vertical dimension, thus—

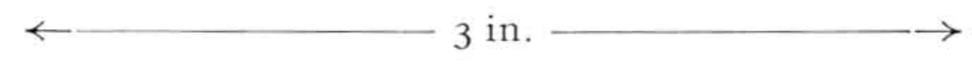

The points of the arrows are understood to indicate the extreme edges of the original. In the case of a number of originals to be reproduced on the same scale, it is usual to mark one only, e.g. No. 1, with the size required and to attach to the others the instruction "Reduce with No. 1," or "As they come." The engraver will then include as many as he can on one negative and one printing plate, and so reduce the cost to the customer.

The parts of the original to be given a tint in the block are marked on the former by cross-hatching in blue pencil,[1] and a note is made on the original as to which pattern of tint, chosen from the photo-engraver's album of specimens, is to be used. In the event of the area for the tint not being defined in the original, it is indicated in blue pencil.

In like manner, any parts to be "scored" are indicated, preferably by attaching a cut-out mask to the original and giving on it the instruction for the kind of shading, e.g. cross-hatching or stipple.

914. **Half-tone.** The making of a half-tone block comprises numerous operations carried out by workmen in different branches of the trade.

The first part of the process is photographing the original through a screen consisting of two glasses engraved in lines and placed face to face, with the lines crossing to form a chequer pattern of from 50 to 150 lines per inch. By suitable adjustment of the size and shape of the lens diaphragm and of the distance of the ruled screen from the sensitive surface, there is an automatic *rendering* of the tones of the original by image dots corresponding with the transparent apertures in the screen but larger or smaller than these latter, owing to a penumbra effect, according as a particular part of the resulting negative represents a light or a dark part of the original. The lens diaphragm most generally employed is one with a square aperture, placed with the diagonals parallel with the lines of the screen. This rendering of the original resembles in some degree that made by a wood-engraver or black-and-white draughtsman, but the result differs from work in these styles, since it conveys an illusion of tone, although the impression itself consists of only two tones, that of the ink (which is of the same thickness in all parts) and that of the bare paper. On examining a half-tone print with a magnifying lens its dot structure is plainly seen, and is indeed perceptible to the naked eye in the case of the half-tone impressions in the daily newspapers.

915. The negative for printing a half-tone block needs to be reversed as regards right and left, and is usually so made in the camera by the aid of a prism or mirror (§ 123); or the negative may be reversed by stripping the film, which is usually that of a wet-collodion plate, although dry plates are also used. It is then printed on to metal, zinc being used for the coarser work, and copper for the finest work. The metal is sensitized with bichromated fish-glue; and, after printing, the excess of bichromate is washed out, the plate dyed, and again washed, whereupon it is "burnt in," converting the glue into a species of hard enamel which resists the action of etching baths.

Before or after burning-in, the subject is marked out with a graving tool, and, if required, a rule is put round it by aid of a drawing-pen

[1] The blue pencil marks do not photograph.

and varnish. The back of the metal is also varnished, and the plate is then ready for etching. This latter is done in short stages with frequent inspection. Parts which the *fine etcher* judges to be sufficiently etched are stopped out with varnish, whilst other parts are attacked or lightened by further etching. The etched plate also often requires to be retouched with a tool for the removal of minor defects.

Etching having been completed, the plate is cut off about $\frac{1}{4}$ in. beyond the edges of the subject, and this margin given a bevelled rebate to allow of nailing to the wood mount.

916. As regards ease of working and quality of the half-tone reproduction, photographic originals may be arranged in the following (decreasing) order of preference—

Black-tone prints on glossy or semi-glossy development papers (white).
Carbon and Carbro prints of black tone on white smooth support.
P.O.P. prints of warm black tone.
Warm-tone or sepia-toned prints on glossy or semi-glossy development papers (white).
Prints on smooth matt white papers.
Red-toned prints, red carbon prints, and prints on tinted papers.
Rough-surface and textured prints.

A kind of original which should on no account be sent to the photo-engraver, if any other is available, is a positive transparency. The engraver will usually make a copy negative from it, and from that a print, with the result that the half-tone block is almost always greatly inferior to one made from a print from the original negative. It must be borne in mind that there is a reduction of contrast and some loss of fine detail in a half-tone reproduction. A satisfactory result must not be expected except from a perfect original; if the latter is poor, it is well to have it worked up by an experienced retoucher of originals for process reproduction.

Fine etchers are not necessarily artists, and often attempt to *improve* the reproductions of originals which they consider poor in one way or another. Hence, when it is a question of reproducing a photograph in which the contrast or tones represents a definite artistic aim, it is well to insist that the reproduction shall be as nearly facsimile as possible. The schedule of charges for ordinary work, even on copper, scarcely allows of the care necessary for the finest results, and it is better to pay more for a superior grade of quality.

Originals sent to the photo-engraver should be lightly marked on the back with soft pencil only. They should be carefully packed between stout cardboards or inserted in a cardboard tube for protection against creasing or damage in transit.

917. In addition to the size of the reproduction, already referred to in § 928, originals require to be marked with particulars of the screen and edging of picture which are desired. These particulars should be marked on the margin of a mounted print or on a strip of white paper attached to the back of the original with a touch or two of gum.

The following table shows the rulings of screen to be used for half-tone blocks suitable for various descriptions of printing. The screens commonly kept by most photo-engravers are indicated by heavier type—

Lines per inch	*Description of printing*
50, **55**, 60	Daily newspapers printed on rotary machines
85, 100	Newspapers, etc., printed on flat-bed machines.
120, 133	Average work on medium-quality paper.
150, 165	High-class printing on art paper.
175, 200	Superfine printing of the highest class.

In case of doubt as to the screen to be used it is well to confer with the manager of the printing works.

The picture on a half-tone block may be made rectangular, circular, or any other shape; it may also be vignetted to an irregular and shaded outline, or "routed to outline," i.e. the background cut away round the subject.

As regards a surround for the subject, this may be a thin black rule or line (which is frequently of assistance to the printer) close against the picture; or this rule may be at a slight separation produced by the cutting of an intermediate white band about $\frac{1}{64}$ in. in width with a graving tool. This latter finish is usually given unless "solid rule" is ordered.

The part of the subject to be included may be shown by pencil lines on the face of the original, or by marks indicating the ends of the diagonals of a rectangular picture or axes of an oval; or, again, by a paper mask attached to the back of the original so that it can be folded over on to the front.

Also, as required, the original should be marked to indicate the outline of a vignette or the line to which the bust in a portrait is to be cut away.

918. Collotype. In the collotype process the printing surface is usually prepared on a thick glass plate which has received first a substratum

of silicate and then a coating of bichromated gelatine. The plate is then baked in an oven, the coating becoming grained or reticulated. The various points of each grain thus acquire different degrees of sensitiveness, allowing of the tones of an original being rendered as a more or less continuous grain, as may readily be seen by examining a collotype print with a magnifying lens.

Printing on the sensitive plate is done from a reversed film negative, usually prepared by stripping the film of the original negative from its glass, transferring it to a flexible support, and trimming and retouching.

After exposure to light, the plate is washed out with water to remove excess of bichromate and soaked in diluted glycerine (the so-called *etching bath*), which keeps the parts not hardened by the action of light in a moist and swollen condition; the hardened parts remain dry, and thus retain the greasy ink, which is transferred to the paper in the subsequent printing.

A collotype plate made by a highly-skilled operator will allow of 1,000 impressions being printed; the printing of a larger edition requires several plates.

919. Whenever possible, the collotype printer should have the original negative of the subject to work from, or, failing that, a positive transparency of first-rate quality, preferably made on a stripping plate. With each such plate is sent a print marked to show the part of the subject to be included; if the collotypes are to have a white margin this print should be mounted on paper of the size of the reproduction so as to show the width, etc., of the margins. The print should also bear the wording for the titles or other lettering, which, as a rule, is printed from type; and it is also advisable to settle at the same time the quality of paper and colour of ink to be used by the collotype printer.

920. Photo-lithography. In this process of reproduction, printing from an inked metal[1] plate is done either directly or indirectly. In the former process the image on a zinc or aluminium plate is inked for printing directly on to the paper. In the indirect or *offset* process, now increasingly used for large editions, the ink is taken from the metal plate on to a cylinder provided with a rubber covering, from which it is in turn transferred to the paper, the inked rubber surface adapting itself to the irregularities in the surface of the paper.

The printing on the metal, in the case of a line original, is done as for photo-zinco minus the etching. The parts of the metal corresponding with the white ground of the original are treated with a preparation of gum arabic and an acid (e.g. phosphoric, chromic, or fluosilicic), by which a porous film of insoluble salt is formed on the surface of the metal, after which they are moistened with clean water as a protection against the greasy ink.

The printing may also be done directly under a positive, such as a tracing, or type-matter proofed on transparent film, the image being *reversed*, as regards black and white, after printing.

With full-tone originals, a screen negative is first made as for a half-tone block (§ 929) but of greater contrast, since the contrasts are not enhanced as they are in the etching of a metal plate. This negative is then used in the same way as that from a line original.

In offset printing, the impressions, as a rule, are not as vigorous as those from a typographic block, the black being usually a dark grey; by a very slight biting of the metal in the image of the blacks, more vigorous images are obtained and a much larger number of copies can be printed from the same plate.

The instructions to be given as regards scale of reproduction, screen ruling, and amount of subject are the same as those specified above for photo-zinco (§ 928) and half-tone (§ 932), and need to be supplemented only by those for the actual printing.

921. Rotary Photogravure. The negative is retouched as may be necessary, and a positive transparency of suitable contrast made from it, preferably on film or a stripping plate. This is retouched and mounted with the films of letterpress or other illustrations to be arranged on the same cylinder. From this composite positive, a negative is printed on special gravure carbon tissue. Before or after exposure under the positive, the carbon tissue is exposed under a special screen (an original or a duplicate) of cross-line pattern of fine transparent lines on an opaque ground. The screen is of a ruling of 150 to 175 lines per inch, the transparent lines being about one-quarter the width of the opaque squares. After printing, the carbon negative is transferred to the copper-surface cylinder, viz. a cylinder of cast iron coated with copper by electro-deposition or provided with a copper sleeve attached by hydraulic pressure. The negative pigment image is "developed" as in the carbon process, and, after drying, the

[1] Stone is now no longer used to any extent.

various parts of the subject-matter are marked off, blocking out with varnish parts, such as borders, interspaces, etc., which are to print white.

The cylinder is etched by spraying with solutions of iron perchloride of successively lower strengths, which penetrate the gelatine resist-image more or less quickly and attack the underlying metal to a greater or less depth, according to the thinness or thickness of the gelatine, that is to say, according to the depth of tone of the positive. The images of the transparent lines of the screen offer an almost complete resistance to the passage of the etching fluid, since they consist of gelatine more thoroughly hardened than any other parts of the image by reason of the two successive exposures. They thus form innumerable separate tiny cells, varying in depth, but each having thin partition walls uniformly level with the original surface of the metal.

On completion of etching, the cylinder is cleaned to remove the resist and is passed on to the printing machine.

The ink used for rotary gravure printing is quite different from that for other printing processes. In place of the stiff mixture of pigment and a drying oil employed for these latter, there is used a highly fluid solution of various resins and dyes in a volatile medium such as toluene or xylene. The depressions in the cylinder are charged with this liquid by means of a roller, half immersed in the ink container. The excess of ink is removed from the cylinder by a steel blade (called a *doctor*) which constantly bears against the cell walls, whilst jets of warm compressed air effect the drying of superfluous ink adhering to the metal in the margins. The paper passes round the cylinder under strong pressure, taking up the ink held in the cells, and then traverses steam-heated cylinders by which the solvents in the ink are evaporated.

The final impression consists of different thicknesses of a coloured transparent ink. In consequence of the sideway diffusion of the ink, the pattern of white lines formed by the partition walls of the cells is slightly darkened and thus the exceedingly fine structure of the image is still further improved in this respect.[1]

[1] Formerly a photogravure process was used that give prints identical in appearance with those printed from the aquatint plates of aquafortist engravers: the carbon paper, exposed under the positive only (without a screen), was transferred to a copper plate previously covered with a resin "grain," consisting of a layer of an appropriate resin deposited by levigation, and then fixed by moderate heating. The inking was done by hand, and the printing in a hand press.

922. The "copy" for gravure reproduction is preferably the original negative; failing this, a first-rate print on paper of quality for use as the original for a half-tone block (§ 931) should be sent.

In addition to particulars of the size or scale of the reproduction and of the amount of subject to be included, as when ordering process blocks, it is well, when giving an order, to mark also on the print details respecting the printing, viz. number of copies, colour and size of paper, colour of ink, etc., data that may also be put on the proof which finally reaches the engraver marked "Press."

923. Colour Prints. There are numerous processes by which prints in colours may be made of a subject of which only an ordinary negative is available; the colour scheme is decided by the colour printers in accordance with any written instructions or a coloured specimen photograph.

Here we will consider briefly only those processes of reproduction, in three or four colours, from colour-sensation negatives.

While it is possible to make, by one or other of the processes which have been mentioned, a reproduction in three or four colours of a colour screen transparency, this method of working should only be employed for moving subjects or landscapes, of which the making of selection negatives direct presents some difficulties.

In all other cases the method to be followed is that of three-colour separation, and it is often of advantage to make, in addition, a negative on the same scale on a panchromatic plate with a deep yellow filter for use, if necessary, as a grey or neutral key printing plate. In every case it is well to supply the colour fine-etchers with a good colour screen transparency of the subject, in addition to the three-colour set of negatives, as a guide in their work of retouching. The transparency need not be the same size as the separation negatives.

It is always of advantage, when placing orders of this kind, to get into touch, before the work is undertaken, with the specialist who will be directly responsible for the reproductions, and to carry out his requirements.

CHAPTER LII

GENERAL PRINCIPLES OF RADIOGRAPHY

924. X-ray Generators. X-rays (W. C. Röntgen, 1895) are comparable with rays of light, but have wavelengths shorter than those of the extreme ultra-violet, and are produced by a very different process.

An X-ray generator, reduced to its simplest form, consists of a thin bulb of high-melting-point glass, fitted with two metal electrodes and evacuated. When these two electrodes are connected to the two poles of a source of electricity (continuous or rectified current) which have a considerable difference of potential (40,000 to 100,000 volts), the *cathode*, i.e. the electrode connected to the negative pole, emits a stream of very small particles of electricity, *electrons*, at right angles to its surface; these are projected at a very high velocity.

The wall of the tube, or preferably the other electrode (the *anti-cathode*), which as a rule is inclined at an angle of 45° to the stream of *cathode rays*, is bombarded by this stream and becomes the source of the emission in all directions of the X-rays. If the cathode is made in the form of a spherical cup whose centre of curvature is situated on the surface of the anti-cathode, the cathode rays, converging on to the centre of curvature, will form a *focus* of X-ray emission of very small size approaching a point; but the overheating of the anti-cathode is then enormous.[1]

X-ray generators have been greatly improved by an invention of W. D. Coolidge (1913). In the Coolidge tube the vacuum is such that even with a potential difference of 200,000 volts no discharge occurs, nor are any electrons emitted.[2] The cathodic bombardment cannot occur until the cathode is made incandescent; this is achieved by making the cathode in the form of a spherically coiled cap of tungsten wire through which an auxiliary heating current flows (8 to 12 volts, 0·5 to 1·0 amp.). The speed of the emission of the electrons depends entirely on the difference of potential between the cathode and anti-cathode, but their number, and in consequence the intensity of the cathode stream, may be regulated at will by the temperature of the cathode, that is to say, by the intensity of the heating current. There is thus avoidance of the irregularities, due to the variations in the pressure of the residual gas in the older type of tubes, which were much less completely evacuated and are now known as gas tubes.

A further advantage of the incandescent cathode type of tube accrues from the dissimilarity of the two electrodes; the anti-cathode is constantly maintained at a temperature lower than that necessary for the emission of electrons, and consequently the current is at once arrested if it becomes reversed. Hence these tubes will function, without valves or rectification devices, on a high-voltage source of alternating current, e.g. from a transformer.

The anti-cathode of these generators consists of a plate of tungsten mounted at the end of a copper rod extending to the exterior of the tube in the form of a sleeve provided with blades which act as a radiator for cooling the anti-cathode.[1]

The Coolidge tube will work for a considerable time with perfect regularity; the quality and the intensity of the X-rays can be varied at will; the limiting factor is the possibility of melting the anti-cathode and thus putting the tube out of action. In order to avoid the risk of destroying so expensive a piece of apparatus, it is recommended that the current should be switched off whenever the anti-cathode reaches a dull red heat.

925. Properties of X-rays. X-rays produce no visual effect; the greenish light emitted by gas tubes is a fluorescence of the glass caused by cathodic bombardment and is not connected with X-rays. X-rays can be observed and used by their action on a photographic emulsion (radiography), and by the fluorescence which they excite in many substances, e.g. barium platinocyanide (viewing screens) and calcium tungstate (intensifying screens for radiography).

From the time of their discovery, an outstanding feature of X-rays has been that they

[1] The highly penetrative gamma rays emitted by radio-active bodies are also employed, especially for the radiography of thick pieces of metal.

[2] The residual pressure in a Coolidge tube is less than 1/10,000th mm. of mercury.

[1] In certain types of X-ray tubes cooling is ensured by water contained in the hollow support of the anti-cathode and in a reservoir which is an extension of it; in order that the water shall always be in contact with the anti-cathode the tubes should always be inclined at an angle of about 2° to 3°, the cathode being lower than the anti-cathode.

pass freely through certain substances which are opaque to light (black paper, soft parts of the human body), but are stopped by certain transparent substances (for example, glass). It has been found (L. Benoist, 1901) that the opacity to X-rays increases with the atomic weight of the substance considered.[1] It is owing to this that most organic substances (notably those which constitute the tissues of animals and vegetables), which consist entirely of elements of low[2] atomic weight, are very transparent to X-rays, as are the light metals, such as aluminium and magnesium and their alloys. On the other hand, bone, which contains elements of high[3] atomic weight, and the heavy metals, such as lead and platinum, are opaque to X rays in thicknesses which decrease as the atomic weight increases.

The general properties of X-rays (speed, method of propagation, geometric laws) are the same as those for light, but certain of them, notably reflection, refraction, and interference, have for a long time escaped investigation, as the minuteness of the wave-length requires very delicate experimental apparatus.

Results analogous to those obtained in the spectrum analysis of light by diffraction gratings have been obtained with X-rays by using crystals which play the part of three-dimensional gratings, or by using, at the grazing angle, gratings ruled on glass. It has thus been possible to determine precisely the wave-lengths of the various radiations which are grouped together under the generic name of X-rays.

An X-ray generator cannot produce X-rays of a wave-length (measured in Angstrom units) less than $12{,}350/V$, where V represents the difference of potential between the electrodes;[4] e.g. the shortest wave-length of X-rays which can be emitted with a potential difference of 123,500 volts is 0·1 AU. At the same time a large proportion of rays of greater wave-lengths is produced; the distribution of the various rays throughout the complete range depending to a large extent on the material of which the anti-cathode is made.

Rays of long wave-lengths are usually called *soft rays*, or rays of low penetration, and are emitted when the voltage is low; when the potential difference is great, rays of great penetration are emitted; these are of very short wave-length and are known as *hard rays*.

When a beam of X-rays passes through a body, a small proportion of the total continues its rectilinear course; a portion is diffused without appreciable alteration in the composition of the radiation, as is the case when light passes through a translucent medium. A very small fraction of the total X-radiation is absorbed, with the formation of a corresponding amount of X-radiation of longer wave-length (*secondary radiation*), in a manner comparable with the formation of visible light when ultra-violet light is absorbed by a fluorescent material.

The penetration of the secondary rays is greater (and the wave-length is correspondingly shorter) as the atomic weight of the substance constituting the irradiated body (the secondary radiator) is higher. In addition to this mixed radiation, bodies exposed to the action of X-rays of medium penetrating power emit *rays* which are *characteristic* of the elements present. These rays are particularly troublesome in photography when they are emitted by such metals as iron, nickel, and copper, and the direct irradiation of these metals by X-rays should always be avoided. The radiations characteristic of aluminium are not troublesome, since they have so weak a power of penetration that they can be absorbed by a single thickness of black paper. For this reason aluminium is usually used as a filter to absorb secondary rays of low penetration, and as a material for the construction of the cassettes used for holding sensitive plates or films.

926. Physiological Properties of X-rays. Everyone is familiar with the numerous serious effects of X-rays on the earlier radiologists at a time when the dangers of frequent exposure to the rays were not suspected.

X-rays provoke, notably, lesions of the skin (radio-dermatitis), frequently developing into cancer; slow alterations in the blood,[1] which

[1] The absorption of X-rays is approximately proportional to the cube of the wave-length and to the atomic number (the atomic numbers of the elements are in the same order as the atomic weights; they may be considered as roughly proportional).

[2] Carbon (C = 12), Hydrogen (H = 1), Oxygen (O = 16), and Nitrogen (N = 14).

[3] Phosphorus (P = 31) and Calcium (Ca = 40).

[4] It should be noted that voltmeter indications correspond to the mean values, and not to the instantaneous values of the difference of potential, the only ones to be considered when the tube is run on alternating or rectified current. In these two cases the rays having the shortest wavelength are emitted at the moment at which the difference of potential reaches its maximum value (the peak voltage) which is higher by about 40 per cent than the mean value indicated, in this case, by the voltmeter.

[1] At the Radium Institute at Paris the blood of everyone engaged in handling X-rays or radium is

result in death through acute anaemia, and deep lesions (bones, genital glands, etc.).

The risk of accident obviously increases in proportion to the progress made in the production of apparatus capable of producing more penetrating radiation, against which protective devices, considered safe for less powerful installations, are ineffective.

927. Methods of Protection. The protective measures required in a radiographic laboratory are of three types—

Protection against the risk of electrocution by the exceedingly high tension current.

Effective ventilation.

Protection against X-rays as such.

We will summarize here the recommendations made in 1925 by the National Physical Laboratory (London)—

The generating tube should be enclosed as completely as possible in a suitable protecting material (cup), provided with only one aperture, and this as small as possible. This container should be equivalent to at least 2 mm. ($\frac{1}{12}$ in.) of lead (1·5 mm. if the installation does not exceed 70 kilovolts). The diaphragm, which limits the field irradiated, should be equivalent to 3 mm. of lead (2 mm. for less than 70 kilovolts), and should be made to close completely.[1]

A screen 43 in. wide, 7 ft. high, and reaching to within 1 in. of the floor, should be in front of the operator; it should be equivalent in thickness to at least 2 mm. of lead. If the screen is fitted with a glass window (special lead glass), its protective value should not be less than 2 mm. of lead, nor should it be larger than 22 × 15 cm. (9 × 6 in.).

If the voltage is greater than 100 kilovolts, the protection should correspond with at least 3 mm. of lead; the walls of the room, and, if necessary, the floor and the ceiling, should be provided with protection equivalent to at least 3 mm. of lead.

The thick metal rods terminated by spheres should, as far as possible, be replaced by wire conductors. Overhead conductors[2] should be at least 11 ft. from the floor. It is recommended that the nearest portions should be protected by insulating tubes with thick walls. All metal portions of the apparatus should be earthed.

The control levers should be readily accessible and distinctly labelled. The switches and cut-outs should be double-pole, and the fuses should not be of excessive capacity.

It is especially recommended that the X-ray laboratory should not be installed in a basement; the height of the ceiling should not be less than 12½ ft.; damp places should be avoided. Effective ventilation should be provided to ensure elimination of ozone and nitrous vapours.

Operators should not work for more than 7 hours per day; there should be one day and two half-days free each week and a month's holiday each year, preferably in the form of two separate fortnights.

To the above may be added the caution that if the photographers and the assistants attached to the laboratory do not use the same means of protection as are used by medical radiologists (aprons and gloves impregnated with lead salts, and protective spectacles), they should avoid getting within reach of direct or diffused radiation.

928. Radiographic Images. X-ray images may be compared with shadows projected by a source of light. As is well-known, shadows are sharper as the source of light approaches a point, in which case the shadow obtained approximates to a perspective view obtained from the source of emission.[1] In the case of radiography, the source of emission is never a point (diameter about ⅛ in.), and, therefore, the generator should be removed to such a distance that the source, when viewed from the subject, approximates to a point.[2] The general laws of perspective (§ 22–29) are applicable to the formation of radiographic images. In particular, if it is desired to avoid a marked disproportion in the scale on which are reproduced planes which are at various distances from the plane of projection, the principal distance should be greater as the object to be radiographed is thicker, e.g. at least 3 ft. for the thick portions of the body of an adult subject of medium size.

929. Photographic Effects of X-rays. A sensi-

examined monthly (the gamma rays emitted by radium are X-rays of very short wave-length).

[1] X-rays can be produced by the vacuum valves used for rectifying the current for the generator.

[2] Mention should be made of the automatic cut-outs which operate in the event of a conductor being accidentally touched.

[1] In the case of emission by a finite source, deformations may result from the overlapping of the penumbras of objects situated at different distances from the film (G. Sagnac, 1896).

[1] The dimensions of the focus of emission of the generator can be found by pinhole photography § 38), the pinhole being pierced in a plate of lead and the film protected by black paper; the same means may be used to detect the accidental presence of secondary foci of emission on the cathode, e.g. in the case of an alternating current supply.

tive emulsion, when exposed to X-rays, absorbs only a very small fraction (less than 1 per cent) of the incident radiation; the latent image, instead of being concentrated in the upper surface of the emulsion, as it is in the case of exposure to light, is uniformly disseminated throughout the whole thickness of the emulsion.[1] Thus, several almost identical images may be obtained by superimposing a series of sensitive emulsion coatings, provided that the supports are of slight absorption (film or paper).

The characteristic curve of an emulsion exposed to X-rays differs from the curve obtained by exposing the same emulsion to ordinary light (§ 202). The foot of the curve is very long, and the straight-line portion occurs only in the region of very high density.

Curious antagonistic actions between the photographic behaviour of X-rays and light have been observed. In certain circumstances the latter can destroy the latent image produced by X-rays, and it has thus been possible to produce passable direct positives by taking a photograph on a plate which had previously been fogged by X-rays.

930. Sensitive Material for Radiography. In order to obtain the greatest possible effect from the X-rays it was the custom at first to use plates very thickly coated with emulsion containing a very high percentage of silver bromide. The development of these thick films was usually incomplete, and fixation was difficult. As a result, at the present time, celluloid films coated on both sides with a layer of emulsion of normal thickness are preferred, and penetration of the various baths is much better. The use of these films has become almost general since the introduction of intensifying screens (§ 952).[2]

Various attempts have been made to incorporate, either in the support, in the emulsion, or in an additional film covering the emulsion, salts of heavy metals or substances which become fluorescent under the action of X-rays in order to increase the effect; but it has been found more economical and just as convenient to use these substances outside the emulsion in the form of intensifying screens which are placed in contact with the emulsion and which can be used indefinitely.

As a rule, the X-ray negative is examined directly without positives being printed, and various attempts have been made to render the film more easy of examination by coating it on a translucent support, or by adding starch or other inert substances to the emulsion to obtain a matt surface.

931. Method of Working. When X-rays are used directly to record the image, the plate or film is placed in a black paper envelope, or in a holder[1] of cardboard, ebonite, wood, or aluminium. Rays of low penetrative power are usually used, the average wave-length being about 1·5 ÅU.; for this, a difference of potential of from 40 to 60 kilovolts or a spark gap (between metallic points) of from $2\frac{3}{4}$ in. to $4\frac{1}{2}$ in. is required. The less penetrating[2] are the rays, the more contrasty will be the image. But, owing to the very small effect of X-rays, which are only slightly absorbed by photographic emulsions, the time of exposure is necessarily very long. In these circumstances there is no advantage in employing intensifying screens, which are completely ineffective.

When the mean wave-length used is less than 1 AU., or, better still, if it is less than 0·5 AU., the direct action of X-rays on a photographic emulsion becomes almost negligible, at least in a time of exposure which is possible in practice. Calcium tungstate, however, emits an intense actinic light when exposed to such rays, and it is therefore a great advantage to expose the plate in contact with an intensifying screen coated with a uniform layer of this fluorescent salt; or, better still, a film coated on both sides is sandwiched between two intensifying screens of calcium tungstate having coatings sufficiently thin to avoid complete absorption of the X-rays by the first screen on to which the pencil of rays is incident. It is usually impossible to avoid a certain amount of graininess in the image; this is caused by the discontinuity of the intensifying material. The use of two screens eliminates this granularity to some extent. Finally, the time of exposure is much reduced, and the influence of secondary radiation becomes less,

[1] Note that the impregnation of a sensitive emulsion with a desensitizer does not decrease its sensitivity to X-rays.

It should also be noted that, in the case of X-rays, the photographic effect is proportional to the product of intensity and time; this proportionality being generally held not to apply in the case of ordinary light.

[2] For dental radiography, X-ray films are manufactured measuring about $1\frac{1}{4} \times 1\frac{1}{2}$ in. These are wrapped in a watertight packet, which can be placed in the patient's mouth.

[1] Generally described as a *cassette* (literal translation of the German word into English and French).

[2] For the study of very thin objects (leaves, flowers, insects) ultra-soft rays (corresponding with a spark gap of 1 in.) have been used (P. Goby, 1913).

so that images which are both purer and more contrasty are obtained.

To obtain good results with intensifying screens, the generator should be supplied with a current of from 80 to 100 kilovolts (length of spark gap should be at least 6 in.). The best effect of an intensifying screen is obtained when the maximum energy of the radiation used corresponds with a wave-length of 0·179 AU. (the absorption band of tungsten[1]), and this occurs when the difference of potential across the terminals of the generator is 90 kilovolts (equivalent to a spark gap of nearly 7 in.).

It is easy to see that in these circumstances a very short exposure, which gives a perfect result with a film used between intensifying screens, would give almost no trace of image at all by direct action on the emulsion. Images, therefore, which are obtained in this manner, should not really be called radiographic images, but photographs obtained by the action of fluorescence.

932. Intensifying Screens. Intensifying screens, the use of which has been described in the preceding paragraph, are generally prepared in two varieties; one with a matt unprotected film, and the other with a glossy film obtained by a washable coating of varnish.

While matt screens, the fluorescent material of which is in effective contact with the emulsion, sometimes give images which are sharper than those given by the washable screens, in which the fluorescent salt is separated from the emulsion by the thickness of the varnish, they have the drawbacks of being exceedingly fragile and causing stains, due to contact with fingers and to splashes from solutions in a badly-organized photographic dark-room.[2] The washable screens, on the other hand, can be washed with soap and water as frequently as is necessary, and can thus be kept in a condition of perfect cleanliness.

If the two intensifying screens are not identical, the one with the thinnest coating of fluorescent salt should be placed on the side of the film nearest to the generator.

[1] This radiation does not begin to appear until a difference of potential of at least 70 kilovolts (spark gap of about $5\frac{1}{2}$ in.) is reached. It is not until this limit is reached that an intensifying screen has any effect; then the result, at first negligible, becomes more and more considerable, in proportion to the increase in potential, until it becomes preponderant.

[2] Matt screens which have been stained by splashes of developer can sometimes be cleaned by swabbing them gently with hydrogen peroxide; the screen should then be left for some time in the sun, after drying, to *complete* the evaporation of the hydrogen peroxide.

When filling the plate holder, care should be taken to avoid specks of dust between the intensifying screen and the film; these would show as shadows on the film.

It has been pointed out that certain intensifying screens acquire after a time a lasting phosphorescence; in this case, some time should be allowed between two successive uses, to avoid the formation of an image of the previous exposure on an unexposed film.

933. Elimination of Diffused and Secondary Radiation. It is necessary, in the first place, to reduce to a minimum the production of diffused and secondary radiations, and, secondly, to absorb as completely as possible any rays, the occurrence of which has not been prevented, before they reach the film.

In the absence of any precautions, diffused radiation may have from four to ten times as much effect in the radiography of thick parts of the human body as the direct radiation (R. B. Wilsey, 1921). This explains how it is that a radiographic image may be deficient in detail and contrast, in consequence of the general fog from these rays.

The production of diffused rays in the body which is being radiographed is limited not only by the diaphragm, which is generally placed near the generator, but also by a localizer of lead, which is placed close to the subject and which allows the X-rays to have access only to the parts of the body which it is intended to examine.

The rays diffused by the irradiated portion of the subject can be absorbed by an anti-diffusing grid of the Potter-Bucky type, which consists of a series of thin shallow strips of lead held in position by strips of a material transparent to X-rays (e.g. strips of wood). When the grid is in the working position, all the lamellae are oriented towards the source of the X-rays; during exposure, the complete diaphragm is moved in a cylindrical path concentric with the source of the rays. Direct rays can thus pass between the lamellae, which, owing to their movement, are not themselves registered[1] on the film, while the diffused radiation, with the exception of that portion of it which is propagated in the same direction as the direct, is arrested.

A well-made anti-diffusing grid (very thin, flat, and perfectly convergent lead strips) which

[1] Owing to stroboscopic phenomena the strips may appear on the image if alternating current is used; in this event the speed of the grid should be reduced.

is properly centred approximately doubles the time of exposure; bad centring results in a much longer time of exposure, as the shadows of the strips become much wider, particularly at the edges of the field.

In the radiography of pieces of metal (radio-metallography), and particularly of thick[1] pieces, thick masks of lead, adjusted exactly to the shape of the metal to be examined, are used as well as the localizing screens when a series of identical pieces of regular profile have to be examined. Irregularly-shaped pieces are placed in pure beeswax, which exactly takes their shape, and which is then cut to the shape of the cone bounded by the extreme rays arising from the source and by the outline of the object; the whole is then placed in a cardboard or aluminium box, which is filled with lead[2] shot.

934. Conditions for Sharpness of Image. To obtain a sharp image in the case of true radiography, and in the case of radiography with intensifying screens, it is necessary that the source of the X-rays should be as small as possible, that the tube should be far enough away from the subject, and that the subject should be as close to the film as the thickness of the shutter of the cassette on the one hand, and the thickness of the anti-diffusion grid on the other, permit.[3]

In the particular case of working with intensifying screens, it is essential that the screens should be in perfect contact with the emulsion film over their whole surface; the base of the cassette and its shutter should be perfectly flat, and the method of closing the cassette should ensure that the film and the screen are forced into contact.

Under good conditions, a piece of the wire gauze of a No. 40 sieve (40 wires to the inch), placed parallel to, and $4\frac{3}{4}$ in. from, the film, with the anti-cathode 31 in. from the film, should give a radiograph in which the mesh should be distinctly visible. Local faults of sharpness indicate bad contact between the screen and the sensitive film; a general lack of sharpness implies a source of rays which is too large or the existence of secondary sources.

935. Identification of Negatives. X-ray negatives are generally identified by placing movable lead characters on the cassette during the exposure; these characters may be made by sticking a piece of fuse wire between two thin cards or between a piece of plaster and a piece of celluloid, or by spreading lead dust on to an inscription made on thin card by an adhesive mixture such as ink containing gum, or, finally, by pressing lead powder into a film of wax coated on to a card. It is also possible to impress a sheet of lead with all required particulars, e.g. series number, date, etc., by using a cheque-perforating machine.

By taking care that the inscriptions are always placed in the same position relative to the subject, they may be used to show the correct placing of the negative when it is examined.

936. Time of Exposure. The optimum time of exposure depends in radiography, as in ordinary photography, on many factors, and it is necessary to understand the influence of these factors.

Other things being equal, the optimum time of exposure is proportional to the square of the distance of the anti-cathode from the sensitive film; for example, in moving from 60 to 80 cm., the time of exposure would be increased in the proportion 36 to 64, i.e. 1 to 1·8.

The optimum time of exposure is inversely proportional to the intensity of the current which flows through the generator. When changing, for example, from an intensity of 10 milli-amperes to one of 15, the time of exposure would be reduced in the proportion of 1·5 to 1·0.

In the absence of an intensifying screen, the time of exposure is *almost* inversely proportional to the square of the difference of potential. For example, in passing from 55 to 70 kilovolts, the time of exposure would be reduced in the ratio of approximately 5 to 3. In the case of using intensifying screens no rule can be formulated, since it is known that the effectiveness of screens varies considerably with the quality of the radiation emitted, and consequently with the voltage and form of the current and also with the method of preparation of the screen used.

[1] For radio-metallography of thick pieces of metal, special generators working at 200 to 250 kilovolts are generally used.

[2] To avoid considerable differences in the density in radiographs of pieces of complicated form, which present very different thicknesses in various places, it has been suggested (H. Pilon and A. Laborde, 1926) that the pieces should be immersed in a liquid the absorption of which is slightly less than the metal to be examined, e.g. a 35 per cent solution of barium chloride for aluminium, and a 150 per cent solution of barium iodide for pieces of iron or copper.

[3] In the radiography of bodies having certain movements (heart, lungs in medical radiography) the exposure must be as short as possible; it is then necessary to use very high intensities, which generally leads to an increase of the dimensions of the focal spot on the anti-cathode.

The time of exposure varies almost proportionately with the square of the thickness of the subject, it being understood that the comparison is made between bodies of the same nature.

The time of exposure varies with the sensitivity of the emulsion used, but it should be remembered that there is generally no proportionality between the sensitivities of two emulsions towards X-rays (radiography, strictly speaking) and towards fluorescent light (radiography with intensifying screens); finally, it varies slightly with conditions of development (§ 937).

In every case systematic tests should be made to determine the optimum time of exposure, which depends in large measure on the equipment used (source of electricity and the X-ray generator); in these tests no other factor than the time of exposure should be allowed to vary. Once the optimum exposure for determined conditions has been found, the time for other experimental conditions can be calculated by application of the rules given above.

Numerous calculators of exposure for radiography give an approximate figure for the time of exposure under certain definite conditions by means of graduated sliding scales, some of which are worked out from theoretical considerations and others from experimental determinations.

For timing the very short exposures often rendered necessary when using powerful apparatus, seconds-counters are frequently used. These are graduated in seconds or in milliampere-seconds (product of the intensity and the time), thus providing automatically for accidental change in the intensity.[1]

937. Photographic Operations. The purely photographic side of radiographic manipulations is often neglected, with the risk that a large part of the advantages accruing from a good installation and from highly-sensitive films may be lost.

The dark-room should contain a cupboard, lined inside with $\frac{1}{8}$in. lead, to hold charged cassettes and sensitive material in use. A similar cupboard should be provided, preferably outside the dark-room, for stocks of plates, films, and papers.

Every precaution should be taken to avoid bruising or bending, however lightly, radiographic films, the emulsion of which is very susceptible to abrasion (§ 199).

[1] These instruments should be tested. This testing is particularly easy in the case of alternating or rectified current supply. A film wrapped in black paper is passed rapidly behind a lead screen fitted with a fine slit; the number of images of the slit corresponds with the known number of current impulses (equal to the frequency).

Desensitizing is of particular advantage in radiography in that, as it decreases the risk of fog, it allows development to be prolonged until the desired degree of contrast has been obtained.

Development is best done in vertical tanks, using developing frames (§ 262); as radiographic negatives always have heavy fog, caused by the diffused rays, and which is very intense if an anti-diffusing grid is not used, the contrast reaches a maximum and then falls off very rapidly if development is forced. An endeavour should be made to develop to maximum contrast and thus to assure the best visibility of details in regions where the permeability to radiation is small. Now the range of development times giving the desired result is much wider with a bromided developer than with a non-bromided or insufficiently bromided developer. Owing to the regression of inertia (§ 337), and to the passage of the contrast through a maximum, it is possible to obtain within this range a satisfactory balance between the time of exposure and the time of development analogous to that already noted in the case of gelatino-bromide papers (§ 557). By forcing development to this relative degree, a reduction in the exposure of nearly one-half may be made (R. B. Wilsey, 1925).

In a developer such as—

Metol (Elon, Vitérol, etc.)	22 gr. (2·5 grm.)
Sodium sulphite, anhydrous	2 oz. (100 grm.)
Hydroquinone	90 gr. (10 grm.)
Sodium carbonate, anhydrous	1 oz. (50 grm.)
Potassium bromide	18 gr. (2 grm.)
Water, to make	20 oz. (1000 c.c.)

it is best to adjust the duration of development to twelve times the time taken for the appearance of the image (§ 344). As, moreover, the supervision of the development of each exposure separately removes all the advantages of the use of vertical baths, it is best to determine the normal time of development every now and then (to allow for the progressive exhaustion of the bath and its variations in temperature), and to develop the negatives automatically for the time thus ascertained.

This determination of the normal time of development can be made very simply and quickly as follows (R. W. Wilsey, 1925): Fog half the width of a strip of film by covering the other half with a thick strip of lead and exposing

the whole to X-rays without an intensifying screen (15 milli-ampere seconds at 60 kilovolts at 28 in. from the anti-cathode), and cut the film transversely into several pieces so that each piece has a fogged and an unfogged portion; these pieces are kept for use as needed. The total optimum time of development, equal to 12 times the time taken for the appearance of fog on the half of the sample, is determined by developing the test film, without previous desensitizing, in a small dish into which has been placed the necessary quantity of developer from the tank. As this test takes scarcely more than a minute, it can be repeated so that the mean of the two results can be used to give greater exactness. The time thus found is multiplied by 12.

The same procedure is followed for other developers after having found experimentally the optimum value of the Watkins " factor."

All other operations are carried out in accordance with the general recommendations already given for photographic negatives.

The negative in this case being usually the final image and not an intermediate one as in photography, its essential quality is legibility in the normal conditions of examination. This rules out densities appreciably higher than 2, unless the lamps used for examination are increased in intensity. Now, in films coated on both sides with a layer of emulsion, normally exposed and developed to maximum contrast, the straight portion of the density curve only begins at density 2. The negative that the radiologist considers as correctly exposed is, therefore, usually an under-exposed negative, in which the contrast is much less than it could be if all the densities were included in the straight portion of the characteristic curve. In the case of subjects of weak contrast, it would be advantageous to expose more fully, subject to applying superficial reduction, to bring back the negative to a condition in which it is legible (M. Abribat and J. Thoumas, 1928).

938. Examination of Negatives. X-ray negatives are examined by placing them on the diffusing front of a strongly-illuminated light-box called a negatoscope. Most of these instruments are arranged to receive the negative directly it is taken from the washing water, the negative being gripped by clips along its upper edge. Care should be taken to arrange the negative the right way round; it should not be left for long, owing to the risk of melting the gelatine by the prolonged heating.

939. Printing of Positives. Although radiologists generally examine the negative image, many cases occur (e.g. communication to a third party or illustrations of papers or for conferences) in which positives must be prepared either on paper by contact, or on lantern plates, by reduction.

The difference, which is generally considerable, between the extreme densities of a radiographic negative makes it very difficult, if not impossible, to obtain a positive copy with good values through the whole range of the gradation. All personal interventions of the operator, such as masking, tricks of printing, and so on, run a great risk of misrepresenting or falsifying the radiograph, which should form an authentic document. Fortunately, the importance of a radiograph frequently resides in a small range of densities. In a medical radiograph, for example, it is rare that the detailed structure of bones and lesions of the soft tissues are both of them of interest. In such a case the printing can be arranged to give the best rendering of the important part. In exceptional circumstances two separate prints may be made, one to show the dense parts to the best advantage and the other to show the lighter details.

940. Various Applications. In addition to the applications already mentioned in medicine and for disclosing defects in metal goods, radiography has applications in many industries for the control of manufactured products or for studying processes of manufacture. X-rays have been used with success for the examination of old paintings (A. Chéron, 1921), for distinguishing between natural and cultivated pearls, etc. Finally, brief mention should be made of the applications to radiography of stereoscopic methods,[1] facilitating the interpretation of results, and aiding appreciably in the localization of foreign bodies; also of attempts which have been made to obtain motion-picture records by means of X-rays.

[1] The generally accepted value of the base B (the distance between the two successive positions of the anti-cathode, when displaced in a direction parallel to the plane of the sensitive film) is given by the formula—

$$B = \frac{D\,(D - E)}{50\,E}$$

where D represents the distance of the anti-cathode from the sensitive film, and E the thickness of the subject to be radiographed measured from the sensitive film (T. Marie and H. Ribaut, 1897).

This formula is, moreover, identical with that of Cazes for stereoscopic photography (horizontal views, § 845) if it be granted that $D - E = D'$.

APPENDIX

A CHRONOLOGY OF PHOTOGRAPHY

(Processes and Applications)

1802. *Tom Wedgwood.* Printed silhouettes by contact on leather sensitized with silver nitrate, but without fixation of the images.

1819. *John F. W. Herschel.* Discovery of hyposulphites and of their property of dissolving silver chloride.

1822–25. *Nicéphore Niépce.* Engraving of the first photogravure plates (printing of engravings on tin sensitized with bitumen, etching of the plates, and printing in intaglio); attempts at direct photography; bellows for cameras; iris diaphragm.

1832. *Charles Wheatstone.* First experiments in stereoscopy (geometrical designs).

1833. *Ch. Chevalier.* Simple achromatic objective.

1835–37. *L. J. M. Daguerre.* Daguerreotype (direct photography on a plate of silver superficially converted into silver iodide; development of the latent image by mercury vapour).

1835. *Fox Talbot.* Photogenic drawings, printed by contact on paper sensitized with silver chloride; fixation with potass. iodide or by prolonged washing in salt water. Positive prints of the negatives thus obtained.

1839. *J. B. Reade.* Photo-micrographs with a solar microscope on paper sensitized with silver nitrate and gallic acid (printing-out) and fixed with hyposulphite.

1839. *H. Bayard.* Direct positive images on paper (silver chloride paper blackened by light, then impregnated with potass. iodide before exposure in the camera).

1839. *L. J. M. Daguerre.* Publication by the French Government of working details of Daguerreotype.

1839. *Mungo Ponton.* Sensitivity to light of paper impregnated with potassium dichromate.

1839–40. *John F. W. Herschel.* First use of the word "photography"; intensification with mercury bichloride.

1839–41. *A. Donné* and *H. L. Fizeau.* Conversion of Daguerreotype plates into intaglio printing plates.

1840. *J. W. Draper.* First astronomical photographs (on Daguerreotype plates).

1840. *J. Petzval.* Portrait lens (first use of calculation in working out a type of objective).

1840. *J. W. Goddard.* Increase in the sensitivity of Daguerreotype plates by partial substitution of bromine for iodine.

1840. *H. L. Fizeau.* Gold toning of Daguerreotype images.

1841. *Fox Talbot.* Calotype process for obtaining negatives on paper (silver iodide paper impregnated with silver nitrate and gallic acid; development with gallic acid and silver nitrate).

1842. *John F. W. Herschel.* Ferro-prussiate paper and various processes with iron salts.

1844. *Martens.* Panoramic camera, recording the whole horizon on a Daguerreotype plate.

1844. *David Brewster.* Stereoscope with converging eyepieces.

1847. *Niépce de Saint-Victor.* Negatives on glass by an albumen process.

1847. *S. D. Humphrey.* Establishment, in New York, of the first photographic journal, *The Daguerreotype.*

1847–51. *Mathieu* and *Le Gray, Humbert de Molard.* Gold toning of positive prints on paper.

1848. *Edm. Becquerel.* Attempts at colour photography of the solar spectrum on a plate of silver superficially chlorided (the images could not be fixed).

1849. *G. Le Gray.* First attempts to use collodion as vehicle for negative images on glass.

1850. *Abbé Moigno.* Stereoscopic photography.

1850. *Blanquart-Evrard.* Albumen paper for positive printing; development of partly printed images on print-out paper.

1851. *J. Duboscq; Langenheim.* Positive transparencies on glass for projection.
1851. *F. Scott Archer.* Wet-collodion process in the form in which it is still used.
1851. *V. Regnault.* Use of pyrogallol (in acid solution) for development.
1851. *A. Claudet; J. Duboscq.* Moving photographs by the application to photography (ordinary or stereoscopic) of the Plateau phenakisticope, the first precursor of cinematography.
1852. *Ad. Martin.* Positive pictures by wet collodion on a black support (ferrotype).
1852. *A. Laussedat.* Application of photography to the making of maps.
1852. *Fox Talbot.* Insolubilization of bichromated gelatine under the influence of light. First attempts at screen heliogravure (by means of tulle).
1852. *Lemercier, Lerebours, Barreswill,* and *Davanne.* Half-tone photolithography with bitumen on grained stone.
1853. *Niépce de Saint-Victor.* Photogravure with bitumen on steel.
1853. *M. Gaudin.* Use of potassium cyanide for fixing silver-iodide collodion negatives; use of gelatine as vehicle of sensitive salts.
1853. *J. B. Dancer.* First two-lens stereoscopic camera.
1854. *P. Pretsch.* Photo-galvanography; printing plates (intaglio or typographic) by galvanoplastic moulding of gelatine reliefs.
1854. *M. Lespiault.* Roll holder for negatives (sensitive papers fixed to a band of cloth).
1854. *A. de Brébisson.* Salted paper (with starch) for positive printing.
1855. *A. Davanne.* Folding conical bellows applied to tourist cameras.
1855. *J. M. Taupenot.* Negatives on albumenized collodion (the plate could be prepared in advance and needed only a final sensitizing at the time of use).
1855. *Relandin.* Roller-blind shutter used on the lens.
1855. *L. Poitevin.* Photolithography on a stone sensitized with bichromated gelatine, albumen, or gum; first attempts at obtaining " carbon " printing.
1855. *Lafon de Camarsac.* Photographs vitrified on enamel or on porcelain.
1856. *J. Hill Norris.* Negatives on dry collodion (preserved with gum).
1856. *G. F. Tournachon,* called *Nadar.* Aerial photography from a free balloon.
1857. *E. I. Asser.* Photolithography by transfer of an inked proof on starch-sized paper sensitized with bichromate.
1858. *J. Pouncy.* Gum-bichromate printing.
1859. *Woodward.* Solar enlarging camera.
1859. *Bunsen* and *Roscoe.* Use of the light produced by combustion of magnesium.
1860. *Fargier.* Pigment prints with bichromated gelatine (the " carbon " process) obtained on a transparent support exposed through the back.
1861. *C. Russell.* Negatives on collodion preserved with tannin (dry collodion).
1861. *J. Clerk Maxwell.* Three-colour system of colour photography originated.
1861. *M. A. A. Gaudin.* Collodion emulsion for negative plates.
1861. *J. M. Eder* and *G. Pizzighelli.* Silver chloride positive emulsion with chemical development.
1862. *C. Russell.* Alkaline developers (pyrogallol and ammonia). Reversal of the developed image by solution of the reduced silver and re-development of the residual silver halide.
1864. *Sir Joseph W. Swan.* Double transfer carbon process; improvements in photogravure.
1864. *W. B. Woodbury.* Multiplication of carbon prints by moulding (Woodburytype or Photoglypty).
1864. *L. Ducos du Hauron.* Patent for a camera (for taking and projecting) for motion photography (apparatus not made).
1865. *C. M. Tessié du Motay* and *C. R. Maréchal.* Collotype, printing with greasy inks from bichromated gelatine plates.
1865. *F. Willème.* Photo-sculpture in full relief.
1865. *G. Wharton Simpson.* Positive collodion print-out emulsion used by *J. B. Obernetter* (1867–68) in the commercial manufacture of " celloidin " (collodiochloride) papers.
1865. *J. Traill Taylor.* Use of magnesium flash powder.
1865. *Selle.* Intensification with uranium, used subsequently for toning.
1866. *H. A. Steinheil.* Construction of " aplanat " (rectilinear) lenses.
1867. *Ch. Cros.* Suggested three-colour selection and optical synthesis in a sealed

envelope, deposited at the Académie des Sciences and opened only in 1876.

1868. *J. Albert.* Final improvements in collotype.

1868. *W. H. Harrison.* Preparation of gelatino-bromide emulsion for alkaline development.

1868. *L. Ducos du Hauron.* Three-colour photography and the various methods of achieving it (the patent was not published until the following year).

1869. *A. Ost.* Citric acid for keeping print-out papers containing silver salts.

1871. *R. L. Maddox.* Preparation of a positive gelatino-bromide emulsion capable of being used only with physical development (acid developer).

1872. *C. Gillot.* Typographic blocks etched on zinc by means of a photographic resist, the protection of the image against lateral action of the etch being done by the methods of F. Gillot (1850).

1873. *P. Mawdesley.* Positive gelatino-bromide development paper.

1873. *H. W. Vogel.* Orthochromatism (sensitization of photographic films to green light).

1873. *W. Willis.* Platinum printing paper (commercially available in 1888 after various improvements).

1873–74. *J. Johnston; W. B. Bolton.* Gelatino-bromide emulsion for alkaline development prepared with excess of bromide in presence of only a small proportion of the gelatine, and washed in shreds before coating. These plates were placed on the market in 1874 by the Liverpool Dry Plate Co.

1874. *J. Janssen.* Photographic Revolver, for the chronophotographic study of the transit of Venus across the sun.

1877. *M. Carey Lea.* Ferrous oxalate developer, adapted to gelatino-bromide by *J. M. Eder* in 1879.

1878. *Ch. G. Petit.* Half-tone plates (typographic printing of half-tones) by photography of a relief in plaster, prepared from a carbon print, superficially blackened and ruled with a V-shaped cutting tool on a planing machine.

1878. *G. Muybridge.* Chronophotographic study of the movements of animals.

1878. *C. E. Bennett.* Increase in the sensitivity of gelatino-bromide emulsions by prolonged heating (ripening).

1879. *D. Van Monckhoven.* Increase in the sensitivity of gelatino-bromide emulsions by ripening in presence of ammonia.

1879. *K. Kličˇ.* Photogravure on grained copper by etching through a resist formed by the transfer of a carbon print.

1880. *W. de W. Abney.* Use of hydroquinone as a developer.

1882. *H. B. Berkeley.* Use of sodium sulphite as preservative in developers.

1882. *Attout* and *Clayton.* Orthochromatic gelatino-bromide plates placed on the market.

1882. *B. J. Edwards.* First focal-plane shutter.

1882. *W. de W. Abney.* Silver gelatino-citrochloride emulsion for print-out papers. These papers (aristotype or silver citrate) were placed on the market in 1884 by *J. B. Obernetter.*

1882. *G. Meisenbach.* Commercial production of half-tone blocks (screen ruled with lines in only one direction and turned through 90° halfway through exposure).

1882–93. *E. J. Marey.* Chronophotography with fixed plates and movable films (photographs taken in rapid succession at equal intervals) and many applications to the study of animal movement.

1883. *E. H. Farmer.* Single solution reducer of ferricyanide and hyposulphite.

1884. *J. M. Eder.* Colour-sensitizing with erythrosine.

1884. *G. Eastman.* Negative paper with strippable film for use in spools and roll-holders, made by W. H. Walker.

1886. *F. E. Ives.* Use in half-tone block-making of a cross-line screen with a square diaphragm.

1887. *G. Hanau.* Drawer changing box for plates.

1887. *G. Pizzighelli.* Platinum print-out papers.

1887. *H. Goodwin.* Patent (delivered in 1898) for manufacture of gelatino-bromide films in long bands.

1887. *E. Bausch.* Central shutter with leaves forming at the same time an iris-diaphragm.

1888. *J. Carbutt.* Gelatino-bromide celluloid cut films placed on the market.

1888–89. *M. Andresen.* Use of para-aminophenol and eikonogen as developers.

1889. *R. Namias.* Acid permanganate reducer.

1889. *A. Lainer.* Acid fixing baths made to keep by addition of sodium bisulphite.
1890. *F. Hurter* and *V. C. Driffield.* Scientific study of the characteristics of sensitive emulsions; creation of photographic sensitometry.
1890. *P. Rudolph* and *E. Abbe.* Anastigmat lenses.
1891. *G. Lippmann.* Interference method of direct colour photography.
1891. *L. Ducos du Hauron.* Stereoscopy by anaglyphs.
1891. *A.* and *L. Lumière; M. Andresen.* Publication of chemical properties which make an organic substance a photographic developer.
1891. *A. Bogisch.* Use of metol, glycin, and diaminophenol as developers.
1891. *S. N. Turner.* Roll films for daylight loading.
1891. *T. Edison.* Kinetoscope; apparatus giving the illusion of movement by observation of pictures, representing various phases of a movement, on an endless film.
1893. *L. Baekeland.* Silver-chloride "gaslight" development paper (Velox).
1894. *A. Rouillé-Ladevèze.* Revival of the gum-bichromate process for pictorial photography.
1894. *J. Joly.* Ruled colour-screen plate for colour photography, following the methods of working suggested by *Ducos du Hauron.*
1895. *A.* and *L. Lumière.* Cinematograph for taking and projecting views (film with intermittent movement).
1895. *W. C. Röntgen.* Discovery of X-rays and radiography.
1895. *K. Klič.* Rotary gravure printing exploited by the Rembrandt Intaglio Printing Co.
1896. *H. W. Hyslop.* Printing on metal with bichromated glue for half-tone block-making (the enamel process of photo-engravers).
1898. *A.* and *L. Lumière* and *A. Seyewetz.* Ammonium persulphate reducer.
1900. *A.* and *L. Lumière.* Photorama, an apparatus for taking and projecting a panorama (the whole horizon).
1901. *C. Pulfrich.* Application of stereoscopy to photogrammetry (stereogrammetry).
1901. *L. Gaumont.* Synchronization of a cinematograph and a phonograph.
1902. *A. Traube* and *A. Miethe.* Ethyl red, first colour-sensitizer of the isocyanine series.
1903. *Eastman Kodak Co.* Gelatine backing of films for non-curling in baths.
1904. *E. Koenig.* Colour-sensitizers (orthochrome, pinachrome, etc.).
1904. *C. Welborne Piper* and *D. J. Carnegie.* Chlorochromate (chromium) intensifier.
1904. *G. E. H. Rawlins.* Printing in greasy ink for pictorial photography (oil process).
1905. *T. Manly.* Ozobrome (now Carbro) process: pigmented prints from developed silver images.
1906. *J. B. L. Didier.* Pinatype (transfer of dye from dyed relief print).
1907. *A.* and *L. Lumière.* Autochrome plates.
1907. *E. J. Wall* and *C. Welborne Piper.* Bromoil (conversion of a bromide print into an image in greasy ink).
1908. *G. A. Smith.* Colour cinematography (Kinemacolor) by projection of alternate images in complementary colours.
1908. *E. Belin.* Transmission of photographic images over telegraph or telephone lines.
1908. *R. Berthon.* Cinematography in colour on films with embossed lenses.
1911. *R. Demachy.* Transfer in a press of prints in greasy inks.
1912. *L. Gaumont.* Three-colour cinematography by simultaneous optical synthesis.
1920. *Lüppo-Cramer.* Desensitizing of emulsions, allowing of development in bright light.
1921. *E. Belin.* Wireless transmission of photographic images.
1920. *L. Lumière.* Photo-stereo-synthesis, giving an illusion of relief by superposition of transparencies, each one representing one of the planes.
1924. *R. F. Punnett* and *S. E. Sheppard.* Discovery and identification of the active constituent in gelatine rendering possible great emulsion sensitivity.

INDEX

ABERRATION, lenses, 23
——, nodal points, 31
Aberrations, residual, and depth of field, 56
Abrasion, effect on emulsion, 137
——, emulsion, prevention of, 127
—— marks, 359, 399
Abrasive pencils, 318
Absorption band, 4
—— of light, 5
—— ——, in lenses, 34
Acetate film-base, 158
——, soda, properties, 351
Acetic acid, properties, 278
Acetone, in development, 238
——, properties, 248
Acetylene gas and burners, 495
Achromatic (definition), 25
Achromatism, testing for, 75
Acid fixing baths, 278
—— hypo, sepia toning, 381
Acids, stoppers for, 183
Actinometer(s), 216
——, carbon printing, 421
——, for printing, 339
—— papers, 216, 350
Adapters, plate, for roll-film cameras, 126
Additive methods of colour photography, 535
Adjustable landscape lens, 70
Adsorption, at a surface, 137
Adurol (developer), 240
Aerial perspective, 8, 151
—— photographs mounting mosaic, 459
—— photography, camera for, 116
—— ——, film for, 164
—— ——, ortho. plates, 151
—— ——, tanks for film development, 178
Aerophote, aerial camera, 101
Aesthetic image, 10
Afocal system, 45
Age, effect on density and contrast of bromide paper, 365
Agfacolor dye-coupling process, 544
—— screen-plate, 544, 545
Air, keeping solutions from, 187
Air-bells, bromide paper, 366
——, from tap-water, 250
——, in tank development, 177
——, on negatives, 296
——, prints, 362, 400
Air-brush, construction and use, 460
Albedo (definition), 8
Albumen for dye tinting, 463
Albumenized papers, 348
—— ——, silver per sq. ft., 346
Albums, for special requirements, 353
Alcohol, wet, regenerating, 292
Aldis anastigmat, 66
Alkalinity of developer, influence, 238
Alkalis, action in developer, 237
——, equivalence, 249
——, for developers, 246–8
——, neutralizing quantities, 247
——, stoppers for, 183
Alternating current, fluctuations cause irregular density, 195
Altitude, and exposure, 212
Alum, reactions with hypo, 273
Aluminium, flash-powders, 201
——, for writing on glass, 184
—— spark, for high-speed photography, 194
—— surfaced mirrors, 83
Alums, properties, 273
Amidol developer, acid, 263
—— ——, bromide paper, 366
—— ——, hard or soft, 264
—— ——, lantern plates, 373
——, —— plus fixer, 267
—— ——, tropics, 266
——, properties, 243
Amines, as alkalis in development 238
Ammonia, effect on bichromate sensitizer, 414
——, —— bleaching bath, 379
——, properties, 247
——, redeveloping after intensification, 308
Ammonium carbonate, properties, 248
—— chloride, in fixing bath, 276
Amperes, 478
Anachromatic lenses, 61
—— ——, focussing, 207
—— ——, mercury light, 207
—— symmetrical lens, 65
—— telephoto lenses, 70
Anaemia, photographic factories, 167
Anaglyphs, 518, 529, 531
——, films for, 163, 530
Anamorphosers, 472
Anamorphosis (definition), 15, 472
Anastigmat lenses, 65–7
Angle of field, 34
—— —— and diameter of image, table, 74
—— vision, 14
Angström units, 2
Anhydrous chemicals, 182, 185
Anti-halation quality, measurement, 161
—— sub-stratum, 161
Anti-planat lens, 65
Anti-static films, 164
Aplanatic condenser, 478
—— (definition), 26
Apochromatic (definition), 26
Arc lamps, enlarging, 478
—— ——, features, 194
—— ——, mirror type, 496
—— ——, modified for high-speed photography, 194
—— ——, projection, 496
Arc-light printing, 338
——, spectral composition, 6
Aristotype paper, 349
Arithmetical progression, 139
Arrowroot size, P.O.P., 347
Artificial light, and filter factors, 147
—— ——, colours by, 6
—— ——, sources of, 6
Artigue actinometer, 339
—— process, carbon printing, 429
—— soft-focus method, 208
Astigmatism, 23, 27
——, effect of diaphragm, 31
Atmosphere, colour selective properties, 150
Aurantia, action on skin, 224
——, colouring matt varnish, 319
Autochrome process, 544, 545
Autographic film, 126
Automatic focussing, 43
Axis, optical, of lens, 23
——, principal, of lens, 23
——, secondary, of lens, 24

BACK of negative, retouching, 318
Backgrounds, added to negatives, 322
——, printing-in, 343
Backing, anti-halation, 160–2
——, ——, removal, 161, 250
——, formulae, 162
—— sheets, 162
Bacteria, action on gelatine, 291, 299
——, developer fog, 237
Bacterial formation of sulphides in developers, 237
Bag changer, 124
Balance, darkroom, 181
——, in pictorial composition, 210
Ball-and-socket tripod head, 113
Band markings, 295
Barrel distortion, 30
Baryta coating, 159, 332
Base, large, stereo-photography, 522
——, of stereogram, 508
——, reduced, stereo-photography, 524

Basic Scarlet N, desensitizer, 223, 224
Batch number of emulsion, 163
Beam-splitting cameras, colour photography, 540
Belitski's reducer, 315
Bellows shutter, 95
Bicarbonates, in development, 238
Bichromate reducer, 315
——, removal of excess, with bisulphite, 432
Bichromated gelatine, action of light, 413
—— —— relief, 434
Bichromates, ammonia and potash, properties, 414
——, poisoning, 414
Binding lantern slides, 491
Binocular vision, 16, 506
—— ——, sensation of relief, 16
Bisulphite, alkalis to neutralize, 247
——, colour sensitizing, 154
——, soda, properties, 245, 246
Black, absolute, 8
—— flashes (electric sparks), 142
—— surfaces, reflection from, 8
Bleaching, Bromoil process, 448
——, for toning, 379
Bleach-out colour process, 533
Blisters, negatives, 297
——, prints, 397
Blocking-out negatives, 319
Blockmaking, 558
——, retouching prints for, 462
Bloom, negatives, 299
——, prints, 400
Blue-black tones, effect of hypo, 371
—— ——, gaslight papers, 370
Blue lamp(s) for darkroom, 175
—— ——, for studio use, 196
Blue-print. *See* Ferro-prussiate Process
Blue spots, sulphide toning, 379, 401
—— toning, 386
Book camera, 115
Borate, soda, properties, 248
Borax, in development, 238
——, properties, 248
Border, printing, 341
—— tints, mounting, 452
Borders, on mounts, 452
Bottles, blue and brown, 183
——, for stock solutions, 187
——, sealing, 183
Boudoir size, print, 451
Brass, fog from developer, 179
Brilliance of lens (definition), 36
Bromide paper(s), 365
—— ——, converting to P.O.P., 350
—— ——, density curve, 359
—— ——, effect of age on density and contrast, 365
—— ——, gradation, 335
—— ——, safelights, 167
Bromide paper(s), silver per sq. ft., 358
—— prints, intensification, 312
Bromides, effect on development, 227, 228
——, —— on reducers, 316
——, properties, 249
Bromoil process, 447
—— ——, papers for, 447
—— ——, prints for, 393, 447
Bronzed negatives, 299
—— prints, bromides, 400
—— ——, P.O.P., 346, 398
Brush development, big enlargements, 489
—— ——, bromide paper, 367
—— reduction, prints, 377
Brushes, oil and Bromoil processes, 439
Bubbles, in lenses, 37
Bulb exposures, 90
Burnishing prints, 455
Burnt documents, deciphering, 139

C.D.V. size, print, 451
Cabinet size, print, 451
Calcium chloride, for drying, 188
Callier effect, 475
Cam, self-focussing device, 44
Camera(s), anti-vibration support, 109
——, beam-splitting, colour photography, 540
——, care of, 129
—— cases, 113
——, cinematograph, 553
—— extension, 107
—— —— box, 107
——, folding, 117
——, hand-stand, 110, 113
——, movements, 107
—— obscura, 20
—— parts, names and functions, 106
——, pocket supports, 127
——, press, 117
——, reflex, 121
——, roll-film, 125
——, stereoscopic, 520
——, studio portrait, 109
——, testing of, 114
——, twin-lens, 110, 122
Candle-metre (definition), 7
—— second (definition), 7
Candle-power, of light, 7
Candles, preventing guttering, 168
Capillary flow, washing method, 287
Carbon image as loose film, 425
—— print, gradation, 10
—— printing, 413–28
—— ——, double transfer, 425
—— ——, failures, 428
—— ——, non-transfer, 429
—— ——, single transfer, 422
—— tissue, multiple, 417
—— ——, preparation, 416
Carbonate, ammonia, properties, 248
Carbonate, potash, properties. 248
——, soda, desiccated, 248
——, ——, properties, 247
Carbons, arc lamps, 194, 496
Carbro process, 445–7
—— ——, prints for, 445
Cardboards, thicknesses, 452
Caricature copying, 471, 473
Cascade washer, 286, 392
Casein printing papers, 348
Casket lens, 67, 70
Catatype process, 447
Cathode rays, 563
Caustic, of a beam, 26
—— potash, properties, 247
—— soda, properties, 246
Cellophane, for protecting prints, 395
Celluloid, for film, 158
——, paper coated with, 159
——, storage regulations, 329
—— varnish, 323
Cellulose acetate film-base, 158
Celor lens, 67
Cement tanks, 179
Centre of projection (perspective), 12
Centred system, 23
Centring, defective, in lenses, 37
——, light-source, enlarging and projection, 480
Ceric sulphate reducer, 315
—— ——, reversing bath, 303
Chalk toning, 351
Changing bag, 189
—— boxes, plates, 123
Characteristic curve, broken, double-coated emulsions, 141
—— —— of emulsion, 140, 141
—— surface, 140
Chemical development, 130
—— focus, 25
—— fog, 132
Chemicals, commercial preparations, 187
——, measuring, 185
——, order of, in formulae, 185
——, storage and use, 182–5
——, weighing, 185
Chinese shadows (pseudo-anaglyphs), 531
Chloride emulsions, colour sensitized, 369
—— papers. *See also* Print-out Papers
Chlorides, effect on development, 227
——, —— on reducers, 316
——, in reversing bath, 302
Chloro-bromide papers, 374
Chlorochromate intensifier, 311
Chloroplatinite, potash, properties, 353
Chromates, properties, 414
Chromatic aberration, 23, 24
—— ——, effect of diaphragm, 31
Chrome alum, properties, 274
Chromium intensifier, 310

Chromoscopes, 541
Cigarette, in darkroom, 189
Cine projection, image size and focal length, chart, 503
—— ——, stroboscopic illusions, 557
Cine-films, dye tinting, 390
Cinematograph film (35 mm.), for miniature cameras, 116
Cinematography, 552–7
——, colour, lenticular film process, 534
——, Gasparcolor process, 543
——, stroboscopic, 197
——, three-colour, 541
——, two-colour, 537
Circle of confusion, 47
—— ——, selection of, 49
—— of least confusion (astigmatism), 27
Circles, trimming, 451
Citrate, potash, properties, 385
Citrates, effect on development, 228
——, ferric ammonium, properties, 405
Citric acid, softening tanned gelatine, 274
Claims for defective plates, etc., 163, 294
Classification of negatives, 328
Clayden effect, 142
Cleaning darkroom utensils, 180
—— old negatives, 327
Clock, darkroom, 181
Clouds, orthochromatic rendering, 151
——, printing-in, 343
Coccine, new, 318
Coefficient of effective aperture, 46
Collimator, combined range-finder and view-finder, 119
Collodion, glazing prints, 394
—— P.O.P., 349
—— process, wet, 130
Colloidal silver, solid solution, 137
—— state, 137
Collotype process, 560
Color (Sury) pastel process, 437, 438
Colour, absorption band, 4
—— and illumination, 3
—— photography, 533–51
—— ——, polarizers as sky shades, 85
—— printing, photo-mechanical, 562
—— prints, multiple carbon tissue, 417
—— sensitive emulsions, spectrum test, 145
—— sensitivity, and contrast, 144
—— ——, eye and emulsion, 144
—— ——, test charts, 144
—— ——, tests, 144
—— sensitizers, classification, 155
Colour sensitizers, properties, 154
—— sensitizing, mechanism, 155
—— temperature, of light source, 193
—— variations in daylight, 192
Colour-blindness, 2
Coloured images, by direct development, 236
—— objects, photography of, 151–2
—— prints, mordanting dyes on, 463
Colouring prints, 462
—— —— and transparencies, 389
Colours, by artificial light, 6
——, emphasizing rendering, 152
——, in spectrum, 1
——, luminosity, 2
——, mixture, 4
——, powdered (sauces), 460
——, primary (definition), 4
——, reflected, 4
——, saturated, 4
——, spectral composition, 4
——, subjectivity of, 547
Colour-screen. *See* Light-filter
Colour-separation, general principles, 534
—— ——, light-filters, 537
—— ——, negatives, from screen-colour transparencies, 550
Coma, 28
——, effect of diaphragm, 31
Combination photographs, mounting, 458
—— printing, 343
Combined developing and fixing, 266
—— toning and fixing, P.O.P., 354
Combining lenses, optical rule, 45
Compensating developers, 259
Composition lines on focussing screen, 111
——, pictorial, hints, 210
Compressor, for air-brush, 461
Condenser, in enlarging, 476
——, mirror, 482
——, sizes for negatives, 481
——, testing, 478
Confusion, circle of least (astigmatism), 27
——, ——, selection of, 49
Conjugate points, of lens, 38
—— ——, ——, graphical representation, 38
Continuing action of light (carbon printing), 413, 421
—— radiation, P.O.P., 347
Contraction, gelatine film on drying, 291
——, prints, in drying, 394
Contrast, and colour of printing light, 340, 360
——, —— sensitivity, 144
——, and development, 252
——, hydroquinone developer, 263
——, metol-hydroquinone developer, 263
Contrast negative, reduction by dilute developer, 230
——, printing papers, 358
——, reduced by reflection within lens, 36
——, reducing in enlarging, 488
——, reduction with positive, 319
——, strong, tanning developers, 263
Control during enlarging, 487
Convergence (of lens), 38
Convergent verticals, 17
—— ——, correction of, 41, 470
Convertible anastigmat lens, 66
—— lenses, 64, 67
Cooke lens, 66
Coolidge X-ray tube, 563
Cooling troughs, lantern projection, 499
Copper, fog from, developer, 179
—— intensifier, 312
—— toning, 386
Copper-ammonia reducer, 315
Copying, automatic focussing, 43
—— camera, 107, 466
—— ——, Photostat, 108
—— colour transparencies in monochrome, 549
——, contact, 466
—— easel, 108
——, illumination of original, 197
——, in successive strips, 469
——, lighting for, 468
——, reflex, 466
——, scale and exposure, 213
—— transparent originals, 107
Corks, for bottles, 183
Corrector, Piazzi Smyth's, 30
Cosmic rays, fog from 138
Cotton, sensitizing, 404
Covering power, of lens, 34
Cracked negatives, saving, 325
Crown glass, 25
Crystalline chemicals, 182
Crystoleum colouring, 463
Curvature of field, 23, 29
—— ——, effect of diaphragm, 31
Curve, characteristic, of emulsion 140
Cut-off, due to lens mount, 33
Cutting shapes, 451
Cyanide-iodine reducer, prints, 377
Cyanides, colour sensitizing, 154
——, poisonous action, 270
Cyanotype papers, 405
Cylinders, oxygen, 495
Cylindrical lenses, for distortion copying, 472
—— perspective, 17

D. & P., numbering films, 191
Dagor lens, 66
Dallmeyer lenses, aperture markings, 59
Dark slides, checking register, 108, 114
—— ——, for successive exposures, 123

Dark slides, hand cameras, 123
—— ——, lacquered, fog due to, 123
—— ——, loading, 189
—— ——, notched to indicate plate, 191
—— ——, testing light-tightness, 114
—— ——, various patterns, 111
Darkroom accessories, 177–81
——, as camera, 108
——, cleaning, 172
——, design and equipment, 172–6
——, entrances and passages, 173
——, for hotels, 172
—— illumination, 168
——, lamps and safelights, 166–71
——, space per person, 172
—— walls, 172
Daylight, colour variations, 1, 192
—— enlargers, 476, 483
—— projection screens, 502
——, spectral composition, 6
——, variations in power, 192
Deckled edge, trimming, 451, 452
Defective plates, etc., claims for, 163, 294
Defects, lens, 36
Deformations, by copying, 471
Delft ware, photographing, 152
Deliquescent chemicals, 182
Densitometer, printing exposure measurement, 340
Density, law of, 139
——, optical, 139
——, reflection, 334
Depth development, with amidol, 244
—— focussing scale, 57
—— of field, 49–52
—— ——, absolute, 50
—— ——, chart, 53, 55
—— ——, factors affecting, 51
—— ——, independent of focal length, 51
—— ——, of eye, 19
—— ——, relative, 49
—— ——, ——, and physical optics, 51
—— ——, scale, camera, 57
—— ——, tables, 54
—— of focus (definition), 57
Desensitizer(s), added to developer, 366
——, and development factors, 225
——, influence on physical development, 268
——, —— on Watkins factor, 225
——, reduction of aerial fog, 224, 229
——, testing, 223
Desensitizing dyes, 223
——, mechanism, 224
——, principles and formulae, 222
——, X-ray films, 569
Destruction of latent image, 136
Detective camera, 115
De-varnishing negatives, 324
Developer, alkalinity, influence, 238
——, coloured with dyes, 222
——, concentration, effect on fog, 229
——, constituents, 235
——, cooling, 231
——, desensitizer added, 366
——, dilute, for reduced negative contrast, 230
——, dyes added, 240
——, effect of dilution, 229
——, —— of temperature, 230
——, exhaustion effects, 231
——, ferrous oxalate, 234
——, fog, bacteria, 237
——, —— from metals, 179
—— formulae, choice, 257
——, hardening of gelatine, 236
——, penetration into paper base, 363
——, reduction potential, 226, 235
——, stain image, 236
——, staining, intensification, 236
—— stains, prevention, 257
—— ——, prints, 399
—— ——, removing, 297
—— ——, treatment, 257
——, strengthening, 256
——, tank, removing scum, 249
——, temperature coefficient, 231
——, testing, 267
Developers. *See also under the various developers*
——, as desensitizers, 222
——, bacterial formation of sulphides, 237
——, chemical constitution, 235
——, —— names, 241
——, compensating, 259
——, fine-grain, 259
——, ——, table, 260
——, inorganic, 233
——, metol, precautions in compounding, 261
——, mixtures, 235
——, organic, 235
——, oxidation products, 236
——, tanning, for strong contrast, 263
——, thickened, 239
——, tropics, 239
——, Watkins factors, 233
Developing and fixing, combined, 266
—— solutions, preserving from air, 187
Development, and contrast, 252
——, automatic, 258
——, brush, big enlargements, 489
——, ——, bromide paper, 367
——, by inspection, 261
——, carbon tissue, 423
——, chemical and physical, 131
——, colour-separation negatives, 539
——, depth, with amidol, 244
——, direct, coloured images, 236
Development, dishes and tanks, 177
——, during exposure, in enlarging, 488
——, dye-coupling, colour processes, 544
——, effect of bromides, 227, 228
——, —— of chlorides, 227
——, —— of citrates, 228
——, —— of iodides, 229
——, —— of tartrates, 228
——, electrolytic theory, 227
—— factor, gamma, 140
——, factorial, 232, 259
——, ——, and desensitizers, 225
——, ——, bromide paper, 366
——, failures, 294
——, fixed time, 259
——, general principles, 226
——, judging end, 253
——, lantern slides, 364
——, local, 251
—— marks, and rocking dishes, 250
—— ——, on vertical plate, 231
——, mechanism, 226
—— papers, 358
—— ——, exposure, 360
—— ——, failures, 399
——, physical, 268
——, ——, after fixing, 269
——, ——, before fixing, 268
——, ——, influence of sensitizers and desensitizers, 268
——, P.O.P., 356
——, preliminary wetting, 250
——, printing papers, 363
——, prints, to finality, 364
——, rapid or slow, 257
——, speed, 227
——, stop-bath, 254
——, tentative, 265
—— time, factors influencing, 252, 253
—— ——, for various papers, 261
——, tropics, methods, 265
——, two-dish, 264
——, ultra-rapid, in television, 257
——, under-exposures, 230
——, water-bath, 264
——, X-ray materials, 569
Dewing of lantern slides, 491, 504
Dextrine mountant, 454
Diagonals of standard plate sizes, 74
Diagrams, lantern slides, 490
Diaminophenol. *See* Amidol
Diamol (developer), 241
Diamond, glass cutting, 157, 167
Diaphragm, action on lens, 46
——, and speed of lens, 58
—— aperture, 46
—— ——, measurement, 60
——, diffraction effect, due to, 32
——, double aperture, for stereoscopy with large lenses, 36
——, effect on aberrations, 31
——, —— on image, 23
——, incorrect placing, 37

Diaphragm, oblique, as sky shade, 85
——, rotating, 46
—— shutters, 97
—— ——, efficiency of, 97
Diaphragms, different types, 46
——, inside camera, 84, 116
——, system of marking, 59
Diazo printing processes, 444
Dichroic fog, 237, 297
Diffraction, caused by iris diaphragm, 160
—— disc, 32
——, effect on image, 32
——, in image formation, 21
Diffused light, enlarging by, 482
Diffusing materials, loss of light, 482
Diffusion, circle of least (astigmatism), 27
—— of image, in enlarging, 486
—— of light, by surfaces, 8
——, within lens, 36
DIN system of speed numbers, 141
Diogen (developer), 243
Diopters, conversion table to focal lengths in ins. and cms., 38
Dioptichrome screen plate, 544
Discharge tube, modified for high-speed photography, 196
Dishes and tanks, 177
——, rocking and development marks, 250
Displacements, of focus, 26
Dissolving views, lantern projection, 494
Distance of vision, 14
Distance-measuring finder, 120
Distilled water, 185
Distortion, 30
——, and position of lens diaphragm, 30
——, automatic correction during enlarging, 471
—— copying, cylindrical lenses, 472
——, correction by copying, 470
——, due to focal plane shutter, 99
—— effects, crossed slits, 473
——, from emulsion shrinkage, 143
——, in perspective, 13
——, of lens image, 23
Documents, burnt, deciphering, 139
——, erased, deciphering, 469
——, forged, copying, 469
Dolmi (developer), 241
Double image, in camera, 20
—— ——, negatives, 296
—— outlines in prints, 397
Double-drop shutters, 95
Drawings, ink, from bromide prints, 377
——, pencilling, projected image, 488
Drop shutter, 91
——, volume of, 180
Dropping bottle, 180
—— ——, for caustic soda, 265
Drying, contraction of gelatine film, 291
——, failures, 299
——, instantaneous, saturated solutions, 293
—— machines, prints, 393
——, negatives, 289–93
——, newspapers in container, 188
—— prints, 392
—— racks, 181, 290
——, rapid, 291
——, ——, with saturated carbonate solution, 238
——, rate of, and humidity, 289
——, temporary, 293
——, with calcium chloride, 188
Dry-mounting, 455
—— ——, failures, 456
Dufaycolor process, 544, 548
Duplicate negatives, transparency for, 369
Dust, on plates, 190
Dusting-on process, 436
—— ——, reversed negatives, 305
Dye printing, by contact, 434
—— ——, by imbibition, 434
—— prints on fabrics, 405, 443
—— toning, 387
Dye-coupling development, colour processes, 544
Dyed gelatine reliefs, 434, 435
Dyes, acid and basic, 387
——, added to developer, 240
——, desensitizing, 223
——, developer coloured with, 222
——, for anaglyphs, 530
——, for colouring prints, 463
——, for Pinatype process, 435
——, for toning, 389

Easel, enlarging, 484
Eau de Javelle. *See* Hypochlorite
Edge fog, plates, 188
Edinol (developer), 242
Effective aperture, 46
—— ——, coefficient of, 46
Efficiency, diaphragm shutters, 97
——, focal-plane shutters, 102
Efflorescent salts, 182
Eikonogen (developer), 243
Electric lamps. *See also* Arc Lamps
—— ——, half-watt, 194
—— light, spectral composition, 6
Electricity, precautions in darkrooms, 168
Electrolytic theory of development, 227
Elon (developer), 241
Embossing prints, 457
Emulsion, action of hydrogen peroxide, 137
——, —— of ozone, 138
——, batch number, 163
—— coating, papers for, 332
——, distinguishing surface, papers, 359
Emulsion, distinguishing surface, plates, 189
——, effect of abrasion, 137
——, —— of friction, 137
——, gelatine, analysis of, 134
——, ——, making, 132
——, ——, thickness of coating, 135
——, grain, 134
——, removing grease, 294
——, reticulation in tropics, 266
——, ripening, 132
——, silver bromide, properties, 133
Emulsions, action of metals, 138
——, —— of paper, 138
——, —— of wood, 138
——, double-coated, broken characteristic curve, 141
——, ——, latitude, 141
——, gelatine, reactions, 137
——, protection against moisture, 188
——, relative sensitivity, 358
——, self-screened, orthochromatic, 148
——, sensitiveness to various light sources, 193
Enamel dishes, 179
——, half-tone process, 559
Enamelled carbon prints, 428
Enamels, ceramic, 437
——, imitation, 457
——, photographic, 437
Enclosed arc lamp, 479
Enlargement, degree of, 474
——, optical rule, 40
Enlargements, large size, handling, 488
Enlarging, 474–89
——, automatic correction of distortion, 471
——, —— focussing, 43
——, lens for, 61
——, soft-focus, 207
Entrance pupil (of lens), 46
Entrances, to darkrooms, 173
Envelope plate-holders, 123
Envelopes, negative storage, 329
Enzymes, removing gelatine, 327
Episcopic projection, 499
Erased documents, deciphering, 469
Etching resist, tanning developer 236
Etchings, photo-, 462
Ether, properties, 319
Exit pupil (of lens), 46
Expansion, prints, on wetting, 394
Exposed plates, indicating, 123
Exposure, ambiguity of definition, 7
——, and graininess, 212
——, and image colour, lantern plates, 372
——, —— sharpness, 32, 211
——, and scale of image in copying, 213
——, —— of reproduction, 59

Exposure, and subjects, 213
——, carbon printing, 421
——, cinematography, 554
——, colour-separation negatives, 539
——, development papers, 360
——, errors, effects on negatives, 255
——, extinction meters, 219
——, for infra-red photography, 216
——, governing factors, 212
——, in enlarging, 486
——, judging by image on focussing screen, 219
——, latitude, 211
—— measurement, printing, 339, 340
—— meter, coupled with iris diaphragm, 218
—— ——, photo-electric, coupled to shutter and diaphragm, 115
—— meters, 215–19
—— ——, light integrating, 218
——, moving objects, 214
——, screen-colour processes, 548
—— tables, 219–20
——, telephoto lens, 213
——, units of measurement, 7
——, X-ray photography, 568
Exposures, unknown, developing, 264
Extension box, camera, 107
Extinction exposure meters, 219
Eye, adaptability to light, 166
——, and emulsion, comparison of colour-sensitiveness, 144
——, angle of vision, 14
——, change of spectral sensitivity with intensity, 166
——, dark adaptability by pupil contraction, 9
——, depth of field, 19
——, resolving power, 18
——, sensitivity of, 8
Eyes, flashlight portraiture, 202
——, separation, 506

F/NOS., basis of, 59
Fabrics, dye prints on, 405, 443
——, sensitizing, 405
——, ——, ferro-prussiate process, 404
Factorial development, 232, 259
—— ——, bromide paper, 366
Factors, development, Watkins, 232
Faded prints, restoring, 399, 400
Fading, P.O.P. prints, 399
Failures, in carbon printing, 428
——, in dry-mounting, 456
——, in negative making, 294–300
——, in printing, 397–401
——, sulphide toning, 401
Farmer's reducer, 314
—— ——, prints, 377
Ferric ammonium citrates, properties, 405
Ferric sulphate reducer, 316
Ferricyanide, potash, properties, 314
Ferrocyanide, potash, properties, 406
—— toning, 383, 386
Ferrocyanides, as mordants, 387
——, coloured, table, 383
——, in development, 239
Ferro-gallic papers, 406
Ferro-prussiate paper, 404
—— process, 402
Ferrotypes, 301
Ferrous ammonium sulphate, properties, 234
—— and ferric salts, tests, 402
—— oxalate developer, 234
—— —— ——, desensitizer, 222
—— —— intensification, 309
—— sulphate, properties, 234
Field, angle of, and diameter of image, table, 74
——, curvature of, 29
——, of lens, illumination of, 32
Film base, effect on emulsion, 164
——, cinematograph, processing, 555
——, cleaning from negatives, 327
——, cut, developing, 251
——, development tanks, 178
——, for miniature cameras, 126
—— negatives, drying, 290
—— ——, enlarging, 485
—— ——, glycerin treatment, 288
—— -packs, 122, 127
—— shrinkage, 164
—— spools, wood and metal, 125
——, thickness of, roll and cut, 163
—— transport coupled with shutter mechanism, 115
——, varnishing, 323
Filmcolor process, 544
Films, cinematograph, 552
——, ——, standard sizes, 553
——, positive, 333
——, removing gelatine backing, 327
——, X-ray, 163, 566
Filter. *See* Light-filter
Filtering solutions, 186
Finality, development of prints, 364
Finders, correction for parallax, 118
——, hand cameras, 118–20
Fine etching, 560
Fine-grain developers, 259
—— ——, table, 260
—— development, orthophenylene-diamine, 259, 260
—— ——, paraphenylene-diamine, 259, 260
Finger-markings, plates and films, 189
Fireproofing fabrics, 204
Fixation, acceleration with ammonium chloride, 276
——, effect of hardening on speed, 272
——, mechanism, 272
——, temporary, 255
Fixer, exhausted, iodide test, 278
——, rust in, cause of pinholes, 278
Fixing and developing, combined, 266
—— bath, containing alum, stability, 266
—— ——, effect on metal tank, 180
—— ——, recovering silver, 280
—— ——, tanks for, 180
—— ——, tests for exhaustion, 277
—— baths, acid, 278
—— ——, formula, 278
——, development papers, 375
—— -hardening baths, 279
——, P.O.P. prints, 353
——, principles and practice, 270–82
——, speed, 275
——, stains, 299
——, two-bath, 277
Flange, lens, 72
Flap shutters, 94
Flare spot, central, lenses, 35
Flash-bag (smoke-trapping), 204
Flash-bulbs, 199
Flashlight cartridges, 203
—— portraiture, 202, 204
—— powders, 200–4
—— ——, firing, 203
—— ——, precautions, 203
——, synchronized with shutter, 199
——, testing, 201
Flat negative, positive from 301
Flattening P.O.P., before toning, 350
—— prints, 392
Flicker, cine projection, 556
Flint glass, 25
Floating lid, developing tanks, 177
Floors, load allowed, 329
Fluorescence, from X-rays, 563
Fluorescent substances, 2
Focal length, 24
—— ——, choice of, 73
—— ——, combination of lenses, 45
—— ——, lantern projection, 503
—— ——, measurement, 41
—— ——, negative lens, 45
—— lines (astigmatism), 27
—— surfaces (astigmatism), 28
—— volume (definition), 57
Focal-plane shutters, 99
—— ——, damage by sun, 296
—— ——, efficiency of, 102
—— ——, in miniature cameras, 116
Focus, distance, for best distribution of depth, 50

Focus, effect of light-filter on, 79, 547
——, extending range, 77
Focussing. *See also* Soft-focus
—— adjustment coupled with range-finder, 115
——, anachromatic lenses, 207
——, automatic mechanism, 43
——, by parallax, 205
—— cloth, 109, 111
——, fine, 205
——, hand cameras, 117
——, in enlarging, 485
—— magnifiers, 205
—— ——, colour photography, 539
——, methods and appliances, 205
—— mount (lens), 71
—— scales, graduation, 56
—— screen, composition lines on, 111
—— ——, ground-glass, fine-grain, 205
Fog, aerial, 229
——, ——, reduced by desensitizer, 224, 229
——, ——, —— by safranine, 223
——, atmospheric, penetration, 151
——, average degrees, 229
——, chemical, 132, 229
——, developer, bacterial, 237
——, dichroic, 237, 297
——, due to cosmic rays, 138
——, —— to gaseous emanations, 138
——, due to lacquered dark slides, 123
——, edge, plates, 188
——, effect of developer concentration, 229
——, general, 294
——, marginal, 188
——, metals and developer, 179
——, reduction of, without speed loss, 228
—— streaks, roll-films, 295
——, white, spirit drying, 292
Fogging, with glass dishes, 177
Folding cameras, 117
Forgeries, expert copying, 469
Formalin, rapid drying, 292
Formulae, developer, choice, 257
——, order of chemicals, 185
Framing photographs, 464
Fraunhofer lines, of spectrum, 2
Freezing mixture, hypo, 270
Frequency of light waves, 2
Fresson process, carbon printing, 429
Friction, effect on emulsion, 137
Frilling, negatives, 299
Furniture, panchromatic rendering, 152

Gamma of emulsion (definition), 140
Gas cylinder, regulator, 496
Gaslight paper, 369
Gaslight paper, blue-black tones, 370
—— ——, colour sensitized, 369
—— ——, converting to P.O.P., 350
—— ——, density curve, 359
—— ——, gradation, 335
—— ——, silver per sq. ft., 358
——, spectral composition, 6
Gasparcolor process, cinematography, 543
Gauss points, of lens, 24
Gelatine, action of bacteria, 291, 299
——, attack by insects, 291
—— backing, films, 163
——, bichromated, action of light, 413
—— emulsion, analysis of, 134
—— —— making, 132
—— ——, reactions, 137
—— ——, thickness of coating, 135
—— film, contraction on drying, 291
——, hardening, 250, 273
——, ——, by developer, 236
——, P.O.P., 349
——, preventing swelling, 266
—— reliefs, dyed, 434, 435
——, sensitizers in, 132
Gelatino-bromide process, 130
Gelatino-chloride papers. *See* Print-out Papers
Genol (developer), 241
Geometrical progression, 139
German lenses, aperture markings, 59
Ghost images, by lens, 35
Glass, aluminium pencil, 184
——, blue and brown, for bottles, 183
——, carbon prints on, 422
——, cutting with diamond, 157
—— dry-plates, 157
—— ——, thickness, 162
——, optical, abnormal, 28
—— side, negative, printing from, 345, 367
——, transmission of ultra-violet light, 3
Glass-ware, 180
Glazing carbon prints, 428
—— prints, 394
—— ——, failures, 398
—— ——, with cellophane, 395
—— sheets, waxing, 395
—— solution, ox-gall, 395
Globe lens, wide-angle, 64
Glossy papers, 332
—— surface, reflection factor, 10
Glue pigment printing, 430
Glycerin, effect on development of platinum paper, 409
——, in development, 239
—— treatment, film negatives, 288
Glycin developer, lantern plates, 373
Glycin developer, tank, 261
—— ——, (von Hübl), 264
——, properties, 243
Gold chloride, properties, 350
—— ——, varieties, 182
—— -silver ratio, toned images, 352
—— toning, development papers, 382
—— ——, P.O.P., 350
Goldberg wedge, 140
Gradation, influencing, printing papers, 339
——, print, effect of illumination, 339
——, printing papers, 334, 358
——, softening, bromide papers, 363
Graduated light-filter, 85
—— measures, 180
Grain of emulsion, 134
—— of paper, in copying, 468
——, reducing, in paper negatives, 488
—— size of emulsion and sensitivity, 134
Graininess, and exposure, 212
——, and mercury intensifier, 307
——, in enlarging, 474
——, negatives, 135
Grease on emulsion, removing, 294
—— removers, 439
Green glass, properties, 167
—— light, for darkroom, 166
—— toning, 386
Grey-base ciné-film, 160
Ground-glass, absorption of light, 482
—— focussing screen, fine-grain, 205
Growth of latent image, 139
Guillotine shutters, 93
Gum arabic, mounting, 453
Gum-bichromate printing process, 430
Gutta-percha, lining for dishes, 179

H. and D. speed numbers, 140
Halation, 159–62
——, caused by dirty lenses, 160
——, due to diffraction, 160
Half-tone blocks, 559
Half-watt electric lamps, 194
—— —— light, spectral composition, 6
Halides (definition), 134
Halls, lecture, 502
Halogenizing sulphide toned image, 379
Hand cameras, 115–29
—— ——, finders, 118–20
—— ——, supports for, 128
—— ——, tests, 128
Hands, rinsing in darkroom, 176
Handwriting, expert copying, 469
Hangers, developing, 177
Hard water, washing in, 287
Hardened gelatine, softening, 274

Hardening, before development, 250
——, during development, 266
——, effect on speed of fixation, 272
—— -fixing baths, 279
—— gelatine, 273
—— solution, for fixer, 279
Hat camera, 115
Haze, atmospheric, 8
——, ortho. plates, 151
——, ultra-violet light in, 150
Heat-absorbing filters, projection, 499
Heaters, darkrooms, 174
——, electric immersion, 174
——, lantern slides, 505
——, solutions, 174
Herotar polarizing filter, 81
Herschel effect, 136
—— ——, papers, 359, 370
High-light exposure measurement, 220
High speed photography, modified arc lamp for, 194
—— ——, —— discharge tube for, 196
—— ——, with aluminium spark, 194
Hood, lens, 71, 83
Hotels, darkrooms for, 172
Hue (definition), 5
Humidity, and rate of drying, 289
Hydramine (developer), 241
Hydrated salts, 182
Hydrofluoric acid, precautions, 325
Hydrogen peroxide, action on emulsion, 137
—— ——, pigment processes, 444
Hydrometer, in making solutions, 185
Hydroquinone developer, contrast, 263
—— ——, lantern plates, 373
——, halogen derivatives, 240
——, oxidation products, 237
Hydrotype printing process, 305, 434
Hygroscopic chemicals, 182
Hyperfocal distance, 52
—— ——, and lens correction, 56
Hypergon wide-angle lens, 67
Hypersensitizing, by pre-exposure, 141
—— panchromatic plates, 156
——, with mercury vapour, 141
Hypo, acid, sepia toning, 381
——, dissolving, 278
——, effect on blue-black tones, 371
—— eliminators, 288
——, flooring to resist, 172
——, in development, 239
——, in ferrous oxalate developer, 234
——, in mounting papers, 452
——, minimum in negatives, 284
——, properties, 270
Hypo, reactions with alum, 273
——, rinsing from hands, 176
——, solubility of silver halides, 274
——, tests for, 286
Hypo-alum toning, 381
Hypochlorite, in tap-water, 156, 185

$i \times t$, Schwarzschild law, 140
Iconometer, 210
Iconyl (developer), 241
Ilford colour test chart, 145
Illumination, effect on print gradation, 339
——, lecture halls, 502
——, measurement of, 7
—— of field, of lens, 32
—— of negative, in enlarging, 474
Image, aesthetic, 10
—— and object, relations between, 39
——, coloured, by direct development, 236
——, latent, fading, prints, 358
——, (lens), graphical construction, 40
——, ——, size and scale, 39
——, marginal illumination, 32
——, radiographic, 565
——, real and virtual, 23
—— sharpness, and exposure, 32, 211
——, silver, impurities, 226
——, sulphide, composition, 380
Imbibition, dye printing by, 434
Immersion, copying grainy originals, 468
—— method, in enlarging, 485
Imperial size, print, 451
Indoxyl developer, coloured images, 236
Inertia, regression of, 228
——, ——, papers, 364
Infra-red, copying Daguerreotypes, 468
——, correction of focus for, 26
—— emulsions, 152
—— photography, 152
—— ——, exposures, 216
—— ——, precautions *re* camera and dark slides, 154
—— rays, 2
—— safelight, 170, 171
——, sensitizers for, 3
Ink drawings, from bromide prints, 377
—— stains, on negatives, 300
Inks, greasy, removing, 439
——, gum-bichromate process, 431
——, oil and Bromoil processes, 439
Insects, attacking, gelatine, 291
Intaglio reproduction processes, 558
Integral photography, 519
Intensification, 306–13
——, development papers, 376
Intensification, local, 317
——, powder process, 437
——, staining developer, 236
—— with light, 313
Intensifier, and graininess, 307
——, chlorochromate, 311
——, chromium, 310
——, copper, 312
——, ferrous oxalate, 309
——, mercuric iodide, 310
——, mercury-ammonia, 307
——, Monckhoven, 309
——, pyro, 311
——, silver, 313
Intensifying carbon prints, 425
—— screens, X-ray, 2, 163, 566, 567
Intensity, light, measurement of, 7
Interference colour process, Lippmann, 533
——, light waves, 1
Interior, range of luminosities, 8
Inverse squares, law of, 7
Iodide(s), colour sensitizing, 154
——, desensitizer, 222
——, effect on development, 229
——, —— on fixing, 276
——, —— on reversal, 303
——, in development, 239
——, P.O.P. toning, 352
——, test for exhausted fixer, 278
Iodine, properties, 377
Iodine-cyanide reducer, prints, 377
Iodine-thiocarbamide reducer, prints, 377
Iris diaphragm, 46
—— ——, coupled with exposure meter, 218
—— ——, diffraction effect, 160
—— lens adapter, 72
—— vignetting masks, 342
Iron printing papers, relative sensitivity, 407
—— —— processes, 402–7
—— salts, tests, 402
—— toning, 386
Irradiation in emulsion, 142, 160
Isochromatic emulsions, 144
Isolar plates, 161
Ivory, carbon prints on, 422

Jellygraph, for photo-copies, 404
Joly screen plate, 544
Jumelle camera, 116

Kallitype paper, 407
Katatype process, 447
Kieselguhr, developing carbon prints, 429
Kinetoscope, 552
Knife, retouching with, 320
Kodachrome process, 541, 543
Kodelon (developer), 242

Labels, for use in darkroom, 168, 184
——, waterproofing, 184

Lacquered dark slides, fog due to, 123
Lainer effect, development, 239
Lamps, blue, for studio use, 196
——, darkroom. *See also* Darkroom Lamps and Safelights
——, mercury-vapour, 6, 196
——, —— ——, high-pressure, 197
——, —— ——, quartz, 197
——, projection, 479
Landscape lens, adjustable, 70
——, ortho. plates, 150
——, range of luminosities, 8
Lantern film-slides, 333
—— lectures, 502
—— plates, backed, 368
—— ——, intensification, 312
—— ——, kinds, 333
——, projection, 493. *See also* Projection
—— screens, 500
—— slide carriers, 498
—— slides, 367
—— ——, standard sizes, 490
—— ——, toning, 378–89
—— ——, types and preparation, 490
—— ——, warm tone, 371
Latent image, 130
—— ——, destruction, 136
—— ——, fading, prints, 358
—— ——, growth, 139
—— ——, persistence after removal of halide, 136
—— ——, regression, in tropics, 266
—— ——, retrogression, 139
—— ——, reversal of, 136, 141
—— ——, solarization of, 136, 141
—— ——, sub-halide theory, 137
—— ——, theory, 135
—— ——, X-rays, 566
Latitude, double-coated emulsions, 141
——, exposure, 211
——, negative papers, 164
Lead acetate, properties, 355
—— nitrate, properties, 355
—— oxalate, preparation, 411
Leaves, reflection from, 5
Lecture halls, 502
—— ——, illumination, 502
Lecturer, signal to lanternist, 504
Lectures, lantern, 502
Leimdruck (glue printing), 430
Lens(es), aberrations, 23
—— ——, effect of light-filter, 79
——, absorption of light, 34
—— adapter, iris, 72
——, anachromatic, 61
——, ——, focussing, 207
——, —— symmetrical, 65
——, aperture, comparison of systems, table, 60
——, ——, systems of marking, 59
—— cap, 72
Lens(es), care of, 76
——, casket, 67, 70
——, choice of, 61, 72
——, cleaning, 76
——, convergent or positive, 23
——, convertible, 64, 67
——, —— anastigmat, 66
—— defects, 36
——, diffusion within, 36
——, divergent or negative, 23
—— flange, 72
——, focussing by variable separation, 68
——, front-lens focussing, 68
——, halation effect from dirt, 160
—— hood, 71, 83
——, image, graphical construction, 40
——, internal reflection losses, 34
——, lantern projection, 498
——, mounting in diaphragm shutter, 37
——, mounts, 71
—— names, meaning of, 62
——, non-spherical, 23
——, Petzval portrait, 63
——, rectilinear, 64
——, relative aperture, 46
——, single, 62
——, ——, exceptional speed of, 59
——, softening definition, 207
——, speed ratings, 58
——, supplementary (magnifiers), 77
——, symmetrical, 64, 65
——, telephoto. *See* Telephoto Lenses
——, testing, 75
——, various, light transmission, 58
——, wide-angle rectilinear, 64
Lenticular firm process, colour cinematography, 534
—— —— ——, colour photography, 542
Levels, for camera, 111, 120
Lid, floating, developing tanks, 177
Light, absorption, 5
——, —— in lenses, 34
——, action on bichromated gelatine, 413
——, artificial, sources of, 6
——, composition, 1
——, intensification by, 313
——, measurement of intensity, 7
——, —— of quantity, 7
——, polarized, general properties, 81
——, reflected from coloured surfaces, 4
——, scattering by mist, Rayleigh's law, 150
Light sources, artificial, 193
——, ——, colour temperature, 193
—— ——, efficiency with different emulsions, 193
Light sources, spectral composition, 193
——, velocity, 2
Light-filter(s), 78
—— ——, behind lens, effect on focus, 547
—— ——, care of, 80
—— ——, compensating, screen plates, 546
—— ——, effect on focus, 79, 80
—— ——, —— on lens aberrations, 79
—— ——, factors, 146
—— ——, general properties, 5, 145
—— ——, graduated, 85
—— ——, in combination, transmission of, 6
—— ——, optical effect, 78
—— ——, P.O.P., printing, 340, 346
—— ——, polarizing, 81
—— ——, position for mounting, 80
—— ——, selective, 194
—— ——, three-colour separation, 537
—— ——, various types, 145–6
—— ——, viewing, 146
Lighting, in copying, 468
Lime, deposit on prints, 392
——, in wash-water, 287
Limelight, 495
Line etching, 558
—— markings, on negatives, 295, 296
—— negatives, intensifying, 307
Linen, sensitizing, 404
Lines of composition, 210
Linkage, self-focussing, 44
Lippmann interference colour process, 1, 533
Litho transfers, *via* Bromoil, 449
Lithography, 561
Liver of sulphur, properties, 382
—— ——, sulphide toning, 380, 382
Loading dark slides, 189
Logarithm, 139
Luke (windows), of lens, 47
Lumen-second (definition), 7
Lumicolor process, 544
Luminosities, range in prints, 10
——, various subjects, 8
Luminosity differences, perception, 9
Lux (definition), 7

Mackie lines, development, 232
Magic photographs, 309
Magnesium light, 198
Magnetic blower, arc lamp, 497
Magnification, of magnifying glass, 14
Magnifiers, focussing, 205
——, supplementary lenses, 77
Magnifying glass, rating, 14
Marginal illumination of image 32
Markings, negatives, 297

Masking frame, enlarging, 484
Masks, lantern slides, 492
——, printing, 341
Matt albumen paper, 348
—— surface, coloured, reflection from, 4
—— ——, reflection factor, 10
—— varnish, formula, 319
McDonough screen plate, 544
Measures, graduated, 180
Measuring chemicals, 185
Medallion photographs, 458
Meniscus lens, 24
Mercuric chloride, properties, 307
—— iodide intensifier, 310
Mercury light, anachromatic lenses, 207
——, physical development, 269
—— vapour, hypersensitizing, 141
—— —— lamps, 6, 196
—— —— ——, high pressure, 197
—— —— ——, printing, 360
—— —— ——, quartz, 197
Mercury-ammonia intensifier, 307
Meridian section (astigmatism), 27
Meritol (developer), 241
Metabisulphite, alkalis to neutralize, 247
——, potash, properties, 246
Metal, carbon prints on, 422
—— tank, effect on fixing bath, 180
Metallic salts, colour sensitising, 154
Metallized lantern screens, 501
Metals, action on emulsions, 138
——, fog from developer, 179
——, for tanks and dishes, 179
Metasilicate, soda, properties, 248
Methylated spirit, refining, 292
Metol developer, physical, P.O.P., 356
—— ——, precautions in compounding, 261
——, physical development, 269
—— poisoning, 243
——, properties, 242
Metol-hydroquinone developer, 261
—— ——, bromide paper, 366
—— ——, chloro-bromide papers, 375
—— ——, contrast, 263
—— ——, for under-exposures, 262
—— ——, gaslight paper, 370
—— ——, X-ray films, 569
Metoquinone (developer), 244
Metronome, for darkroom, 181
Midget size, print, 451
Miniature cameras, 115
—— ——, film for, 126
—— ——, twin-lens, 122
Mirror condenser, 482
——, screen for studio camera, 110
Mirrors, aluminium surfaced, 83
Mirrors, for reversed pictures, 83
Moisture, protection of emulsions, 188
Monckhoven intensifier, 309
Monochromatic (definition), 3
Monol (developer), 241
Monomet (developer), 241
Moon, diameter of image, 40
——, intensity of light, 193
Moonlight exposures, 193
Mordant action, stain image, 236
Mordanting baths, dye toning, 387
—— dyes, on coloured prints, 463
—— ——, on gelatine, 435
Mount, focussing (lens), 71
Mountains, exposure factor, 212
Mountants, 454
Mounting corners, 453
—— papers, sizes, 452
—— prints, 453
Mounts, choice of, 452
——, lens, 71
——, position of print, 453
——, sizes for portraits, 451
Moving objects, exposure, 214
—— ——, shutter speeds, 215
—— ——, swinging camera, 214
Multi-flap shutter, 95
Multiple carbon tissue, 417
—— exposure, colour rendering, 152
—— gum printing, 432
Mural decorations, photographic, 332

Names, lenses, meanings, 62
Negative (definition), 10
——, duplicate, transparency for, 369
—— making, failures, 294–300
—— paper, 164
—— ——, latitude, 164
Negatives, by carbon process, 425
——, classification, 255, 328
——, cleaning film from, 327
——, comparative, for darkroom, 254
——, cracked, saving, 325
——, glass, useless for re-coating, 157
——, graininess, 135
——, paper, 158, 164
—— ——, oiling, 325
——, removing varnish, 324
——, roll-film, marking, 191
——, storage, 329
——, thin, advantages, 212
——, tone-range, 335
——, wet, printing from, 362
Neol (developer), 241
Neon lamps, for darkrooms, 169
—— tubes, 6
New coccin, 318
Newton's rings, in printing, 335
Nodal planes (properties), 40
—— points, aberration of, 31
—— ——, crossing of, 42
—— ——, determining, 42
—— ——, of lens, 24
Notch, to show right side of film, 190
Notice lantern slides, 491
Nuclei, sensitive, in emulsions, 135
Numbering negatives, 191

Object and image, relations between, 39
Offset printing, 561
Oil lamps, for projection, 494
—— process (Rawlins), 438
Oil-colouring prints, 464
Oiling paper negatives, 325
Omnicolore screen plate, 544
Opacity, 139
Opal plates, sensitized, 333
Opal-glass, absorption of light, 482
Opaque lantern screens, 501
—— objects, projection, 499
Optical axis, of lens, 23
—— centre, of lens, 24
—— density, 139
—— interval (lenses), 45
Orthochromatic emulsions (definition), 144
—— ——, self-screened, 148
—— photography, 144–56
Orthophenylene-diamine, fine-grain development, 259, 260
Orthoscopic image, 31
Orthostigmat, lens, 28
Osmotic pressure, 283
Over-exposure region, photographing in, 211
Over-exposures, acid amidol developer, 263
——, pyro developer, 265
Over-running electric lamps, 195
Oxalate, potash, properties, 234
Ox-gall, glazing solution, 395
Oxy-acetylene limelight, 495
Oxygen cylinders, 495
Ozalid printing process, 444
Ozobrome process. *See* Carbro
Ozone, action on emulsion, 138
Ozotype printing process, 443

P.O.P., 349. *See* Print-out Paper
Paget screen-plate, 544
Paintings, orthochromatic rendering, 152
——, photographing, 152
Palimpsests, deciphering, 469
Palladium printing papers, 408
—— toning, P.O.P., 353
Panchromatic emulsions (definition), 144
—— plates, blue-green insensitivity band, 144
Panel size, print, 451
Panorama, annular form, 472
Panoramic cameras, lens mounting, 43
—— groups, placing figures in, 18
—— perspective, 17
—— photographs, mounting, 458
—— tripod top (cameras), 113
Pantoscope lens, wide-angle, 64

Paper, action on emulsions, 138, 191
—— base, penetration of developer, 363
——, contraction in drying, 394
——, direction of fibres, 394
——, effect of successive wettings and dryings, 423
—— negatives, 158, 164
—— ——, enlarged, 488
—— ——, oiling, 325
—— ——, reducing grain, 488
——, sizes, 452
Papers, actinometer, 216, 350
——, document and record, 164
—— for Bromoil process, 447
——, for emulsion coating, 158, 332
——, for photographic measurements, 359
——, sensitized on both sides, 332
——, stripping, 159, 332
——, various, development times, 261
Parallax, correction for, in finders, 118
—— focussing, 206
—— stereograms, 519
Parallelism, camera front and back, testing, 114
——, negative and paper, in enlarging, 484
——, original and plate, in copying, 467
Paraminocresol developer, 242
Paraminophenol developer, 262
—— ——, tropics, 266
——, properties, 242
Paraphenylenediamine developer, 263
——, fine-grain development, 259, 260
——, physical development, 269
——, properties, 244
Passages to darkrooms, 173
Passe-partout framing, 464
Pastel colours, 463
Pellet paper, 405
Pencils, retouching, 321
Percentage solutions (definition), 184
Permanganate, local tinting of negatives, 318
——, potash, properties, 302
—— reducer, 315
—— ——, prints, 377
——, test for hypo, 286
Permanganate-persulphate reducer, 316
Peroxide, hydrogen, pigment processes, 444
Perspective, aerial, 8
——, and portraiture, 16
——, and viewpoint, 15, 47
——, camera obscura image, 20
——, cylindrical, 17
——, deliberate modification, by artists, 15
——, on non-vertical plane, 17
Perspective, panoramic, 17
——, photographic, 47
——, principles, 12
——, print, binocular examination, 14
——, with short-focus lens, 48
Persulphate, ammonia, properties, 316
—— reducer, 316
—— ——, prints, 377
Petzval portrait lens, 63
Phenosafranine desensitizer, 222
Phosphate, soda, tri-basic, properties, 248
Phosphorescent bodies, discharge by infra-red radiation, 3
Photo-copies of plans, 402
Photo-electric cell(s), construction, 218
—— ——, printing exposure, measurement, 339
—— ——, sensitivity, 218
—— exposure meters, 218
Photo-etchings, 462
Photographs for reproduction, 560
Photogravure, 558, 561
—— print, range of tones, 10
Photo-mechanical processes, 558–62
Photometer exposure meters, 220
Photometric equivalent, 139
Photomicrographs, two-colour, 537
Photo-murals, 332
Photostat, copying camera, 108
Photo-stereo-synthesis, 520
Physical development, 131, 268
—— ——, after fixing, 269
—— ——, before fixing, 268
—— ——, influence of sensitizers and desensitizers, 268
Piazzi Smyth's corrector, 30
Pictorial composition, hints, 210
—— photography, lens for, 61, 63
—— ——, ortho. plates, 150
Pigment printing processes, 413–49
Pinacryptol green, desensitizer, 224
Pinatype printing process, 434
—— —— ——, dyes for, 435
Pincushion distortion, 30
Pinhole camera, exposures, 21
——, making, 21
—— photography, 20
—— ——, shape of pinhole, 22
——, working distance of, 21
Pinholes, caused by rust in fixer, 278
——, preventing, negatives, 190
Piral (developer = crystalline pyro.), 241
Planar, lens, 28
Planoscopic pairs, 510
Plate shutter, 96
Plate-marking prints, 457
Plates, concavity of, 162
——, glass, 157
——, ——, thickness, 162
Plates, manufacture, 157
——, marking after exposure, 191
——, multiple coated, 161
——, packing, 163
——, safelights, 167
——, sizes of diagonals, 74
——, storage, 188
——, tolerance of cutting size, 162
Platinum paper, gradation, 335
—— ——, imitation, 407
—— ——, sensitizing, 410
—— printing papers, 408–12
—— prints, yellowed, 410
—— residues, recovering, 411
—— toning, P.O.P., 352
Platinum-silver ratio, toned images, 353
Playertype copying process, 466
Poisoning, metol, 243
Poisons, precautions, 184
Polarization of light, 81
Polarized light, for stereoscopic projection, 531
Polarizers, 81
—— as sky filters, in colour photography, 85
——, eliminating reflections, 83
Polarizing filters, 81
Pola-screen polarizing filter, 81
Poles, of lens, 24
Polished surfaces, coloured, reflection from, 4
Polysulphide toning, 382
Porcelain, carbon prints on, 422
—— dishes, 178
Portrait attachment, 78
—— lens, Petzval, 63
——, range of luminosities, 8
Portraits, natural size, 486
——, sizes of mounts for, 451
——, standard sizes, 451
Portraiture, and perspective, 16
——, Artigue, two-plate, 208
——, choosing focal length of lens for, 74
——, flashlight, 202, 204
——, lens for, 61
——, orthochromatic, 148
——, shutter for, 103
——, simplified Petzval, lens for, 64
——, telephoto lens for, 70
Positive (definition), 10
——, direct processes, 301
—— films, 333
——, for reduction of contrast, 319
——, instead of negative, 296
——, intermediate, for duplicate negative, 369
Potash, carbonate, drying negatives, 293
——, ——, properties, 248
——, caustic, properties, 247
Potential, reduction, developer, 226, 235
Powder printing process, 436
Power of lens, 38
Praxinoscope, 552

Pre-exposure, hypersensitizing, 141
Press cameras, 117
——, for dry-mounting, 455
——, for transfer process, 442
—— photography, shutter for, 103
Primary colours (definition), 4
Principal axis, of lens, 23
—— distance (perspective), 12
—— point (perspective), 12
—— points, of lens, 24
—— ray (of lens), 47
Printing boxes, 337
——, ciné-film, 555
——, even illumination, 359
——, exposure measurement, 339, 340
——, failures in, 397–401
—— frame(s), 335
—— ——, with exposure timer, 337
—— light, colour of, and contrast, 340, 360
—— ——, distance, 338, 360
—— machines, ferro-prussiate papers, 403
—— papers, gradation, 334–5
—— ——, influencing gradation, 339
—— processes, in general, 330
——, soft-focus, 208
Print-out paper(s), 346
—— ——, emulsion, 349
—— ——, failures, 398
—— ——, gradation, 10, 335
—— ——, light-filter, 340
Prints, development to finality, 364
——, for Bromoil process, 447
——, for Carbro process, 445
——, mordanted, dyeing, 389
——, range of luminosity, 10
——, reflection density, 10
——, sizes for portraits, 451
——, three-colour, 543
——, tone range, 10
Prism, total-reflection, 83
Process work, 558
—— ——, lens for, 61
Projection, anaglyphs, 531
——, centre of (perspective), 12
——, cinematograph, 556
——, episcopic, 499
——, image size and focal length, chart, 503
——, in colours, 541
—— lamps, 479
—— lanterns, 493. *See also* Lanterns
—— lens, improvized, 499
—— lenses, 498
——, opaque objects, 499
——, screen-colour transparencies, 548
—— screens, 500
——, stereoscopic, 530
——, surface of (perspective), 12
——, three-colour, 536
Promenade size, print, 451
Proofs, defacing, 349
Proportional reducers, 314
Protar anastigmats, 66
Proximity (optical), 38
Pseudoscopic pairs, 509
Pseudo-solarization (Sabatier effect), 142
Pumice, local reduction, 318
Pupils, of an optical system, 46
Purkinje effect, 2
Pyridine bichromate, sensitizing colloids, 414
Pyro developer, over-exposures, 265
—— ——, under-exposures, 265
—— intensifier, 311
Pyrocatechin, properties, 240
Pyro-caustic developer, 265
Pyrogallic acid (pyro), developer, 240
Pyro-soda developer (Kodak), 259
—— —— ——, stainless, 260
Pyro-thiocarbamide developer, for reversal, 301

Quantity, light, measurement of, 7
Quartz lenses, for ultra-violet, 3
—— mercury-vapour lamps, 197
——, transmission of ultra-violet light, 3
Quinoline, properties, 370
Quinone reducer, 315
—— sulphonate, selective developer, 226

Racks, drying, 181
Radial images (astigmatism), 27
Radiography, 563–70
Range-finder, coupled, for miniature cameras, 116
——, —— with focussing adjustment, 115
——, or telemeter, 120
Ray screen. *See* Light-filter
Real image, 23
Reciprocity law, 140, 213
Rectangular lens hoods, calculations, 84
Rectilinear lens, 30, 64
—— ——, wide-angle, 64
Red glass, cutting with diamond, 167
—— ——, properties, 167
—— sensitiveness, from metallic salts, 154
Reducer, Belitski's, 315
——, bichromate, 315
——, ceric sulphate, 315
——, clearing high-lights in reversal process, 304
——, copper-ammonia, 315
——, Farmer's, 314
——, ferric sulphate, 316
——, heavy densities, 317
——, permanganate, 315
——, permanganate-persulphate, 316
Reducer, persulphate, 316
——, quinone, 315
Reducers, effect of halides, 316
——, proportional, 314
——, superficial, 313
——, superproportional, 314
Reduction, development papers, 376
——, in fixing bath, 271
——, local, 317
——, ——, prints, 377
——, negatives, etc., 313
—— potential, developer, 226, 235
Reflection density, 334
—— ——, prints, 10
——, elimination, by polarizers, 83
——, within lens, contrast reduction, 36
——, —— ——, loss of light, 34
Reflex cameras, 121
—— copying, 466
Regression of inertia, papers, 364
—— of latent image, in tropics, 266
Regulator, gas cylinder, 496
Relative aperture, of lens, 46
Relief, stereoscopic, increasing, 507
——, ——, limits of perception, 507
——, ——, normal and exaggerated, 514
——, ——, perception of, 506
——, wash-off, colour process, 543
Reliefs, gelatine, dyed, 434, 435
Repeating back, 109, 540
Reproduction, scale of (lenses), 39
Residual aberrations, and depth of field, 56
Residues, platinum, recovering, 411
——, silver, recovering, 280–2
Resino-pigmentype, 437
Resolving power and relative sensitivity, 143
—— —— of emulsion, 143
—— —— of eye, 18
—— —— of lens, 32
Restoring faded prints, 399, 400
Reticulation, emulsion, in tropics, 266
——, negatives, 273, 298
Retouching carbon prints, 428
——, during enlarging, 488
—— medium, formula, 321
——, negatives, 320
—— prints, 459
—— ——, for reproduction, 462
Retrogresion of latent image, 139,
Reversal, by Pinatype process 434
——, by solarization, 301
——, direct, by solarization, 142
——, dissolving negative image, 302
——, ferro-prussiate image, 403
——, halide solvent in developer, 304

Reversal, latent image, 136, 141
—— processes, 301–5
——, reducer for clearing highlights, 304
——, second exposure, 303
——, using Sabatier effect, 301
——, with thiocarbamide, 239
Reversed telephoto system, for colour cameras, 70
Reversability of light rays, 38
Reversing back, camera, 107
—— bath, bichromate, 302
—— ——, permanganate, 302
—— film on support, 326
Rhodol (developer), 241
Ripening of emulsion, 132
Rising front, lens required, 73
Rochelle salt, platinum process, 408
Rocking developing dishes, 250
—— —— ——, development marks, 250
Rodinal (developer), 242
—— type developer, 262
Roller-blind shutter, 92
Roll-film cameras, 125
——, hand cameras, 123
—— negatives, fog streaks, 295
—— ——, marking, 191
Rubber, fog from developer, 179
Rubbing down density, 318
Russian vignettes, 342
Rust in fixer, cause of pinholes, 278

Sabatier effect (pseudo-solarization), 142
—— ——, reversal, 301
Safe-edge, carbon printing, 420
Safelights, liquid filters, 169
——, preparation, 170
——, principles and formulae, 167–71
——, testing, 170
Safranine, for reducing aerial fog, 223
Sagittal section (astigmatism), 27
Salted paper, 347
Sandell plates, 161
Satrapol (developer), 241
Saturated colours, 4
—— solutions, 184
Sauces (powder colours), 460
Sawdust, developing carbon prints, 429
Scale of reproduction, and exposure, 59
—— —— (lenses), 39
Scales and weights, 181
Scalol (developer), 241
Scarlet N, basic, desensitizer, 223, 224
Scattering of light by mist, Rayleigh's law, 150
Scheiner system, speed numbers, 140
Schlippe's salt, sulphide toning, 381
Schumann emulsions, for ultra-violet, 137
Schwarzschild law, $i \times t$, 140
Screen, half-tone process, 559
Screen plate colour photography, 546
—— ——, light transmission, 546
—— —— transparencies, duplicating, 549
Screen plates, colour, 544
—— ——, ——, manufacture, 545
Screens, lantern, 500
Scum, removing from tank developer, 249
Sea-water, washing in, 287
Secondary axis, of lens, 24
—— spectrum, reduced, 26
Selenium and selenosulphates, properties, 353
—— toning, development papers 382
—— ——, P.O.P., 353
Self-focussing mechanism, 43
Self-screened orthochromatic emulsions, 148
Self-toning papers, 356
—— prints, too red, 398
Sensitive materials, dry repacking in tropics, 191
—— —— for copying, 467
—— ——, handling, 189
Sensitivity and grain size of emulsion, 134
——, relative, and resolving power, 143
——, ——, emulsions, 358
——, ——, iron printing papers, 407
——, threshold of, 140
Sensitized chloride emulsions, 369
Sensitizer, for sepia papers, 407
Sensitizers, for infra-red, 3
—— in gelatine, 132
——, influence on physical development, 268
Sensitizing carbon tissue, 417
—— fabrics, ferro-prussiate process, 404
—— notepaper, 407
—— silk, 348
Sensitometric wedge, 139
Sensitometry, 140
Separating power of emulsion, 143
Sepia photo-copying papers, 406
—— toning. *See also* Sulphide Toning
—— ——, platinum papers, 409
Shading, during printing, 343
Sharpness, standards of, 49
——, vision, 18
Shutter(s), 87–105
——, and flashlamps, 203
——, bellows, 95
——, choice of, 103
——, desirable characteristics of, 89
——, diaphragm, 97
——, ——, mounting lens in, 37
——, double-drop, 95
——, double-plate, 96
Shutter(s), drop, 91
——, efficiency of, 88
——, flap, 94
——, focal-plane, 99
——, ——, damage by sun, 296
——, ——, efficiency, 102
——, guillotine, 93
—— inside camera, 94
—— —— ——, for portraiture, 103
—— mechanism coupled with film transport, 115
——, multi-flap, 95
—— releases, 105
——, reliability of, 90
——, roller-blind, 92
—— speeds, for moving objects, 215
——, synchronized with flashlight, 105, 199
—— testing, 103
—— vibration, testing for, 105
Side swing, of camera, 107, 111
Sight, normal distance, 14
Silk, sensitizing, 348
Silver bromide emulsion, growth of crystals, 132
—— —— ——, properties, 133
—— cyanide, intensifier, 309
—— halides, solubility in hypo, 274
—— image, impurities, 226, 271
—— intensifier, 313
—— nitrate, properties, 348
——, recovering from fixing bath, 280
——, —— from P.O.P. sensitizing baths, 348
—— stains, on negatives, 300
Single lens, exceptional speed of, 59
Sinks, darkroom, 174
Size, arrowroot, P.O.P., 347
Sketch portraits, 462
Skies, orthochromatic rendering, 151
Sky filters, polarizing, 81
—— ——, ——, in colour photography, 85
——, printing-in, 343
—— shades, 85
Slate tanks, 179
Slits, crossed, distortion effects, 473
Snow scenes, exposures, 214
Soda, carbonate, properties, 247
——, caustic, properties, 246
Softened gradation, bromide papers, 363
Soft-focus attachments, 86
—— enlargements, 486
—— enlarging, 207
——, obtaining, 206
—— printing, 207, 208, 343
Solar (daylight) enlargers, 476
Solarization, factors affecting or inhibiting, 142
——, latent image, 136, 141
——, pseudo- (Sabatier effect), 142

Solarization, reversal, 301
——, second maximum, 142
——, theory, 142
Solder, fog from developer, 179
Solid solution, silver, 346
Solubility, 184
Solution, solid, silver, 346
Solutions, stock, 186
——, strength of, 184
Spectrum, colours in, 1
——, impossibility of three-colour reproduction, 537
——, maximum brightness of, 166
—— of light, 1
—— test for colour-sensitive emulsions, 145
Speed numbers, DIN system, 141
—— ——, H. and D. system, 140
—— ——, Scheiner system, 140
—— rating, of lens, 58
Spherical aberration, 23, 26
—— ——, effect of diaphragm, 31
Spirit, drying negatives, 292
——, —— prints, 393
Spools, film, wood and metal, 125
Sports photography, shutter for, 103
Spot lights, 196
Spots on negatives, 295
Spotting, lantern slides, 492
——, negatives, 319
——, prints, 459
Square of a number (definition), 7
Squares, inverse, law of, 7
Stain, from anti-halation backing, 161
—— image, developer, 236
—— ——, mordant action, 236
—— remover, permanganate, 297
Staining developer, intensification, 236
Stains, developer, prevention, 257
——, ——, prints, 399
——, ——, treatment, 257
——, negatives, 297
——, P.O.P. prints, 398
Stand cameras, 106–14
——, studio camera, 110
Starch paste, 407, 454
Star-shaped diaphragm, for even illumination, 33, 67
Static markings on film, 164
Statuette photographs, 458
Steinheil's symmetrical aplanat, 64
Step-wedge, 139
——, testing printing paper, 340
Stereograms, printing and mounting, 525
Stereo-photo-synthesis, 520
Stereopticon (projection lantern), 493
Stereoscope, two-colour synthesis, 537
Stereoscopes, 514–18
Stereoscopic cameras, 520
—— effects, with large lenses, 36
—— pictures, and short-focus lenses, 48
Stereoscopic pictures on single plate, 111
—— projection, 530
—— transparencies, 526
—— X-ray photographs, 570
Stereoscopy, 506–32
Sterry process, 363
Stolze system, aperture markings, 59
Stomach camera, pinhole, 21
Stop (lenses). *See* Diaphragm
Stop-bath, acid, before fixing, 280
——, negative development, 254
——, print development, 365
——, prints, boric acid, 362
——, tank development, 255
Stoppers, for caustic alkalis, 247
——, loosening, 183
Storage, cine-films, 556
——, lantern slides, 493
——, negatives, 329
——, sensitive materials, 188
Strap support, for hand camera, 128
Stray light in camera, 84
Streamer markings, 295
Strength of solutions, 184
Stress marks, 359, 366, 399
—— ——, iodides in developer, 239
Strip printer, 338
Stripping film negatives, 326
—— glass negatives, 325
—— papers, 159, 332
Stroboscope for shutter testing, 99
Stroboscopic cinematography, 197
—— illusions, cine-projection, 557
Studio camera, mirror screen for, 110
——, portrait, lighting, 193
Sub-halide theory of latent image, 137
Subject, and exposure, 213
Subjectivity of colours, 547
Subjects, range of luminosities, 8
Sub-standard cine-films, 553
Sub-stratum, anti-halation, 161
——, for emulsion coating, 157
——, for film coating, 158
Subtractive methods of colour photography, 535
Sugar, in development, 239
Sulphate, soda, in development, 239, 266
——, ——, in fixing bath, 271
——, ——, preventing dichroic fog, 298
Sulphide image, composition, 380
——, soda, properties, 380
—— toned image, re-halogenizing, 379
—— toning, 378
—— ——, failures, 401
Sulphides, formed bacterially in developer, 237
Sulphite, action in developers, 236
——, soda, properties, 245
——, ——, redeveloping after intensification, 308
Sulphocyanide, properties, 351
—— toning, P.O.P., 351
Sulphuric acid, precautions, 246
Sun, altitude and intensity, 192
——, diameter of image, 40
Superficial reducers, 313
Superproportional reducers, 314
Supplementary lens, in enlarging, 481, 486
—— lenses (magnifiers), 77
Supports for hand cameras, 128
Surface of projection (perspective), 12
—— reducers, 314
—— silvered mirrors, 83
Swelling, gelatine, preventing, 266
Swing back, of camera, 107, 111
Switch, darkroom lamps, 169
Symmetrical lenses, 64, 65
—— points, of lens, 39
Synchronized shutter and flash-light, 199
Synthesis, photo-stereo, 520

TANGENTIAL images (astigmatism), 27
Tank, developer, removing scum, 249
—— development, 177
—— ——, inserting hangers, 251
—— ——, use of stop-bath, 255
Tanks and dishes, 177
Tanned gelatine, softening with citric acid, 274
Tanning developer, etching resist, 236
—— ——, for strong contrast, 263
Taps, darkroom, 175
Tap-water, air-bells from, 250
Tartrates, effect on development, 228
Telemeter finder, 120
Telephoto attachment, 78
—— lens(es), 68–70
—— ——, anachromatic, 70
—— ——, exposure, 213
—— ——, fixed-focus, 69
—— —— for portraiture, 70
—— ——, variable power, 68
—— system, reversed, for colour cameras, 70
Telephotography, ortho. plates, 151
Telestereoscope, 508
Tellurium toning, P.O.P., 353
Temperature coefficient of developer, 231
——, effect on developer, 230
Temporary drying, 293
Tessar lens, 67
Test-strips, printing, 361
Thames screen plate, 544
Thermo-development, Watkins, 258
Thermometer, darkroom, 181
Thiocarbamide, dissolving dichroic fog, 298
——, in development, 239
——, properties, 351

Thiocarbamide, reversal, 239
—— toning, P.O.P., 351
Thiocarbamide-iodine reducer, prints, 377
Thiocarbamide-M.Q. developer, lantern plates, 374
Thiocarbamide-pyro developer, for reversal, 301
Thiocyanate, copper, mordant, 387
Thiocyanates, properties, 351
Three-colour processes. *See* Colour Photography
Threshold of sensitivity, 140
Tie-pin camera, 115
Tilt of negative, correcting, 470
Time exposures, 90
Tinting, local, negatives, 318
—— prints, 462
—— —— and transparencies, 389
Tintypes, 301
Tissue, dry-mounting, 457
Titles, added to prints, 342
——, on negatives, 327
Tone, P.O.P., changes on fixing and drying, 346
Tone-range, 8
——, negatives, 335
——, of prints, 10
——, printing papers, 334
——, transparencies, 333
Toning carbon prints, 425
—— processes, 378–89
Tourniquet, Moëssard's, 43
Towel, for darkroom, 176
Tracings, papers for copying, 402–7
Transfer papers, 332
—— prints, oil process, 441
Translucent lantern screens, 501
Transmissions of various lenses, 58
Transparencies, 367. *See also* Lantern Slides
——, by carbon process, 424
——, colour, monochrome copying, 549
——, coloured, dye transfer process, 434
——, mordanted, dyeing, 388
——, screen-colour, 545
——, ——, colour-separation negatives from, 550
——, ——, duplicating, 549
——, stereoscopic, 526
——, three-colour, 542
——, tone-range, 333
Transparency, for duplicate negative, 369
——, opaque support, 368
Transparent originals, copying, 107
Transposing frame, stereo prints, 527
Tri-basic phosphate, soda, properties, 248
Trimming prints, 450, 451
Tri-pack films, colour separation negatives, 540
Triple condenser, 477
Tripod feet, non-slip, 113
—— head, ball-and-socket, 113
Tripods, for hand cameras, 127
——, patterns, 112
Tripod-screw, standard, 112, 128
Tropics, camera construction, 115
——, developers, 239
——, development, methods, 265
——, —— papers, 365
——, dry repacking of sensitive materials, 191
——, regression of latent image, 266
——, reticulation of emulsion, 266
——, storage of sensitive materials, 188
True-to-scale process, 404
Twin-lens cameras, 110, 122
—— miniature cameras, 122
—— stereo-camera, 521
Two-colour processes, 537
Two-plate, soft-focus method, 208

U.S. SYSTEM, aperture markings, 59
Ultra-focal distance, 38
Ultra-nodal distance, 38
Ultra-violet filters, 2
—— light, copying manuscripts, 469
—— —— in haze, 150
——, limits of transparency of various substances, 3
—— rays, 2
——, Schumann emulsions, 137
Under-exposure region, photographing in, 211
Under-exposures, development, 230
——, —— without bromide, 253
——, metol-hydroquinone developer, 262
——, pyro developer, 265
——, weak developer, 230
Unknown exposures, developing, 264
Uranium toning, 385
Utocolor bleach-out process, 533
Uviol glass, 3

VACUUM printing frame, 337
Vanishing point (perspective), 12, 13
Vario lens, 68
Varnish, celluloid, 323
——, matt, formula, 319
——, negative, 323
——, removing from negatives, 324
——, water, 323
Varnishing negatives, 323
—— prints, 457
Ventilation, darkrooms, 174
Vergence (of lens), 38
Vertical enlargers, 476, 483
—— lines, restoring parallelism, 470
Verticals, convergent, 17
——, ——, correction of, 41
Vibration, due to shutter, testing, 105
—— of cameras, preventing, 108, 109
Viewing filter, for colour rendering, 146
——, screen-colour transparencies, 548
Viewpoint, and focal length of lens, 48
——, and perspective, 12, 15, 47
——, when photographing, 209
Vignetter, studio camera, 109
Vignetting, 342
——, by lens mount, 33
—— masks, iris, 342
Virtual image, 23
—— object, 45
Vision, angle of, 14
——, distance of, 14
——, sharpness of, 18
——, stereoscopic, 506
——, ——, range of, 513
Vitrified photographs, 437
Volts, 478

WALKING-STICK camera, 115
Warm tones, by redevelopment, 374
Warmer, lantern slides, 505
Washing, capillary flow method, 287
——, effect on hypo concentration, 284
—— large prints, 175
——, mechanism, 282–3
——, minimum amount of water, 284
——, negatives, 283–8
——, prints, 391
—— tanks, 284–6
——, taste test, 271
——, tests, 285
Wash-off relief colour process, 543
Watch camera, 115
Water, darkroom supply, 175
——, for compounding solutions, 185
——, hypersensitizing with, 156
—— of crystallization, 182
—— varnish, 323
Water-bath development, 264
—— ——, prints, 367
——, for temperature control, 253
Water-colouring prints, 463
Waterhouse stops, 46
Watkins exposure meter, 216
—— factors, development, 232
—— ——, influence of desensitizer, 225
—— ——, table, 233
Watts, 478
Wave theory of light, 1
Wave-length of light rays, 1
Wax colouring, prints, 464
Waxing glazing sheets, 395
—— prints, 457
Wedge, sensitometric, 139
Weighing chemicals, 185

Wet collodion process, 130
—— negatives, printing from, 362
Wetting agents, glazing solutions, 395
—— ——, use before development, 250
—— plates, etc., before development, 250
While-you-wait photography, cameras for, 113
White print on dark support, 420
White surfaces, reflection from, 8
Wide-angle lens, and filters, 79
—— ——, Hypergon, 67
—— rectilinear lens, 64
Windows (luke), of lens, 47
Wood, action of emulsions, 138
—— dishes, waterproofing, 179
——, outline photographs, 458
Wood's glass, 2
Working-up negatives, 317
Wynne exposure meter, 217
X-RAY films, 163, 566
—— intensifying screens, 2, 163, 566, 567
X-rays, properties and uses, 563–70

ZEISS lenses, old, aperture markings, 59
Zeotrope, 552
Zinco blocks, 558
Zones of stereoscopic relief, 507

MADE IN GREAT BRITAIN AT THE PITMAN PRESS, BATH
C7—(T.5630)

ILFORD PHOTOGRAPHIC PLATES

★

The high quality of Ilford Plates has won for them a world-wide reputation. The Ilford range includes plates of varying speeds and emulsions for all photographic purposes, and each type may be relied upon for unvarying consistency.

ORTHOCHROMATIC

	SPEED H. & D.
Double-X-Press Ortho	1,500
Golden Iso-Zenith	1,400
Iso-Zenith	700
Press (Ortho)	700
Iso-Record	500
Rapid Chromatic	400
Auto-Filter	400
Screened Chromatic	270
Special Rapid	270
Chromatic	135

ORDINARY

Zenith	650
Record	500
Special Rapid	270
Ordinary	70

PANCHROMATIC PLATES
(Sensitive to all colours)

	SPEED H. & D.
Hypersensitive Panchromatic	2,500
Soft Gradation Panchromatic	700
Special Rapid Panchromatic	400

Write for booklet "Ilford plates and films"

SELO ROLL FILM

Selo—The Fast Film
Selochrome—The Extra Fast Film
Selo Fine Grain Panchromatic
Selo Hypersensitive Panchromatic

Write for booklet "Selo for perfect pictures"

Write for a copy of the Ilford book, "Photography as an Aid to Scientific Work."

Made in England by

ILFORD LIMITED, ILFORD, LONDON

PITMAN'S BOOKS ON PHOTOGRAPHY

A SELECTION

COLOUR PHOTOGRAPHY

By Robert M. Fanstone, A.R.P.S. Being a new edition of the book written by the late Captain Owen Wheeler.

An up-to-date manual, describing colour photography in simple language, and providing a practical guide to colour processes for the amateur photographer with some experience of ordinary monochrome work, and for the young professional.

In demy 8vo, cloth gilt, 171 pp. With 12 plates showing the whole process of colour in detail. **12s. 6d.** net. Second Edition.

STUDIO PORTRAIT LIGHTING

By H. Lambert, F.R.P.S.

A valuable work by a well-known portrait photographer. The illustrations are an extremely helpful feature of the work, and the variety of articles taken under various forms of lighting are of real assistance to the reader. In each case the Author explains how the result has been obtained.

In crown 4to, cloth, 92 pp., fully illustrated in photogravure and half-tone. **15s.** net. Second Edition.

RETOUCHING AND FINISHING FOR PHOTOGRAPHERS

By J. Spencer Adamson.

This book is written for professional photographers and keen amateurs who wish to know the latest methods and processes which are available for the retouching of photographic negatives and prints.

In demy 8vo, 137 pp., with 8 full-page plates and 16 other illustrations. **4s.** net. Third Edition.

CAMERA LENSES

By A. W. Lockett.

Intended for all serious amateurs and also for professional photographers. After a simple treatment of the principles involved, practically every type of camera lens now available is described. A study of this book will enable the photographer to select the most suitable lens or lenses for any class of work.

In crown 8vo, 108 pp., with 100 illustrations. **2s. 6d.** net.

PROFITABLE PHOTOGRAPHY

By William Stewart.

An indispensable book for all interested in photography as a paying hobby. It gives valuable advice on the right markets for the different kinds of photography and will help you to sell your work.

In crown 8vo, paper boards, 106 pp., illustrated. **2s. 6d.** net. Second Edition.

COLOUR SENSITIVE MATERIALS

By Robert M. Fanstone, A.R.P.S.

The author discusses the use of orthochromatic, panchromatic, and infra-red films and plates; explains how to select and use colour filters; and describes the best methods of handling and developing this type of material. A special chapter of the book is devoted to the use of colour sensitive film with miniature cameras, and there is also a short chapter on the latest processes of colour photography.

In demy 8vo, cloth gilt, 127 pp., illustrated. **8s. 6d.** net.

Order from a bookseller, or direct from

PITMAN, Parker Street, Kingsway, London, W.C.2

Kodak

- The name that the world knows
- The products that the world prefers

Specify **Kodak** *for everything you need in photography:*

AMATEUR · PROFESSIONAL · COMMERCIAL . CINÉ SCIENTIFIC · MEDICAL

There are Kodak Dealers everywhere

Write to **Kodak** *for information about anything photographic. Unique manufacturing and laboratory experience are the reliable foundations of* **Kodak** *Service.*

KODAK LTD., KODAK HOUSE, KINGSWAY, LONDON, W.C.2

MERCURY VAPOUR OUTFITS

for Photography

SERVICE LIGHT TUBES

For automatic lighting or hand tilting. Suitable for any commercial electric supply, for

ENLARGING
PROCESS PRINTING
STUDIO STANDS
STUDIO SKYLIGHTS

Light as diffused as daylight. Intensity absolutely unvarying. Light wholly actinic. No flickering or hissing. No carbons to renew. No intense heat. More light at one-third the cost of other lamps.

SINGLE TUBES

giving 100 c.p. to 5000 c.p.

HEWITTIC ELECTRIC CO. LTD.

HERSHAM, WALTON-ON-THAMES, SURREY

Telephone: Walton-on-Thames 760 (5 lines) *Telegrams:* Hewittic, Walton-on-Thames