Bell & Howell

PRINTER MANUAL

PROFESSIONAL
EQUIPMENT
DIVISION

REVISED APRIL 1969

This manual has been prepared by Bell & Howell to aid in installation operation, maintenance and repair of Model "C" Additive Color Printers, Designs 6100, 6200, 6232, 6570 and 6700. Although basic information contained herein deals primarily with additive color printing, it also applies to Model MB black and white printers of the same design numbers, except as concerns dichroics and number of light valves used. Operating and service information also is included for Designs 6170-C and Design 6173-D Program Tape Checker-Duplicator.

The manual has been issued in loose-leaf binders to permit insertion of further preventive and corrective maintenance procedures as they are issued. It is suggested that Bell &Howell be advised of the individual's name to whom further information is to be sent. All correspondence regarding printer should bear design number, serial number and approximate elapsed operating time in hours. Design and serial numbers are located on the Bell & Howell nameplate just above printer push button panel. Wherever possible, make reference to part numbers and names as shown in the illustrations and engineering drawings when inquiring about specific components or parts. When making inquiries on service of major components, such as light valves, reader, fader, belt drive, etc., always refer to its serial number and the letter following the number. This letter categorizes revision status of the item. When returning such items for repair or updating, always use its serial number on shipping documents and furnish written information explaining the difficulty or trouble. The latter should be packed with the item.

General correspondence should be addressed to:

Bell & Howell Company
Professional Equipment
7100 McCormick Road
Chicago, Illinois 60645

Correspondence or calls regarding maintenance or service should be addressed to:

Bell & Howell Company
Field Services
Professional Equipment
7100 McCormick Road
Chicago, Illinois 60645
Phone: 673-3300 (Area Code 312)

GUARANTEE AND SERVICE POLICY

1. Bell & Howell Company warrants its Additive Color Printers, Program Tape Punches and Tape Checker-Duplicators to be free from defects in material and workmanship under normal usage and service (as outlined in Service Manuals and Bulletins pertaining to this equipment) for a period of twelve (12) months following delivery and installation.

2. After the first year, if maintenance in your laboratory is desired, the services of Bell & Howell technicians will be available on a per diem basis plus the net price of any parts required for service.

3. After the first year, equipment which has been damaged, abused or worn from constant use may also be returned to Bell & Howell Company and will be repaired as promptly as possible at factory established rates.

4. No liability is assumed for film which is damaged or is unsatisfactory for any reason (due to equipment malfunction or otherwise.)

5. No liability is assumed for expenses or damage resulting from interruptions in operation of equipment.

6. Lens, condensers, lamps, mirrors, and other optical parts are not warranted against breakage.

7. This guarantee is void if adaptions, modifications, or accessories of other than Bell & Howell recommendations have been made or attached.

8. This guarantee is made in lieu of any other guarantee, warranty or liability, expressed or implied.

It is suggested that personnel involved in maintenance and repair of this Additive Printing equipment or accessories, study this manual carefully. Additional copies of the operating instructions are available on request.

Bell & Howell reserves all rights to continue engineering improvements on its products without the obligation to install such improvement in previously delivered components.

SECTION I
Introduction

1-1. GENERAL.

These instructions have been prepared as an aid to the operation, maintenance and service of Series "C" Additive Color Printers and companion accessories. Five models of "C" series printers are available — Model 6100C (16-mm), Model 6200C (35-mm), Model 6232C (35/32-mm), Model 6570C (65/70-mm), and Model 6700C (70-mm). Except for the size of film handling components, fader drives and aperture openings, these printers are similar in design features and operating characteristics. For purposes of simplification, therefore, the data and illustrations contained herein are based on the Model 6100C Printer, with instructions peculiar to other models clearly noted.

NOTE: This manual describes the operation of a Model C Printer equipped with a low-speed reader. The operation, maintenance and adjustment of the high-speed reader is covered in a separate section at the rear of the manual.

In addition to the color printers noted above, the Convertible Model MB printer is available for high-speed black-and-white printing and for color printing where scene-to-scene color corrections are not required. Four models of the MB printer are available: Model 6100MB (16-mm); Model 6200MB (35-mm); Model 6232MB (35/32-mm) and Model 6700MB (70-mm). The MB printers are externally identical to the C printers and, as the name suggests, are designed for easy convertibility to color printing. The MB printer can be up-dated to the Model C by the simple installation of two light valves and a dichroic kit. Instructions contained herein will apply to the Model MB printer except as concerns the dichroics and the number of light valves used. Separate instructions for converting the Model MB to full color printing will be supplied with color conversion kits.

NOTE: The first six sections of these instructions deal only with the basic Additive Color Printer. Service information for the Friden-built mechanical areas of the tape punch, reader and checker-duplicator are included in Section VIII. These areas are the mechanically-operated reading pins and contacts, punches, motor, cam switches, etc. For printers equipped with a Sound Printing Attachment, refer to Section VII for soundhead operating and service instructions.

1. No. 3 condenser (2 req'd)
2. Dichroic No. 3
3. Filter holder (4 req'd)
4. Blue light valve
5. Dichroic No. 2
6. Green light valve
7. No. 2 condenser (2 req'd)
8. Dichroic No. 1
9. Fader assembly
10. Cover glass
11. Dichroic No. 4
12. Red light valve
13. Dichroic No. 5
14. Dichroic No. 6
15. No. 4-5 condenser assembly
16. Synchronization lamp
17. Douser

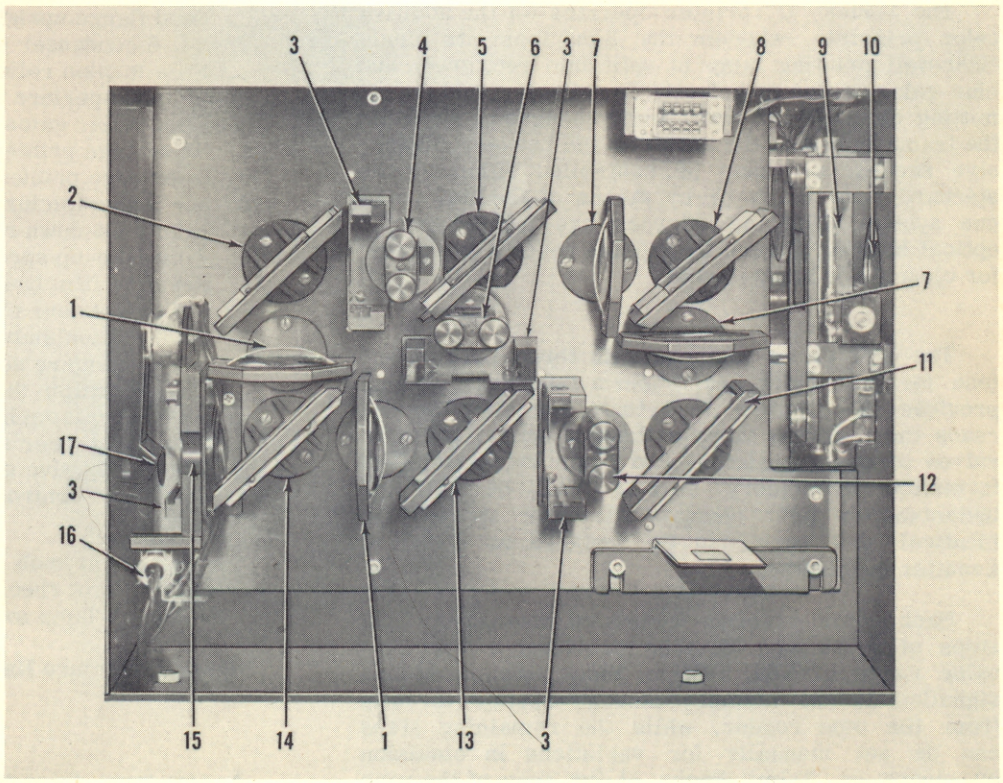

Figure 2. Printer Optical Compartment, Access Door Open

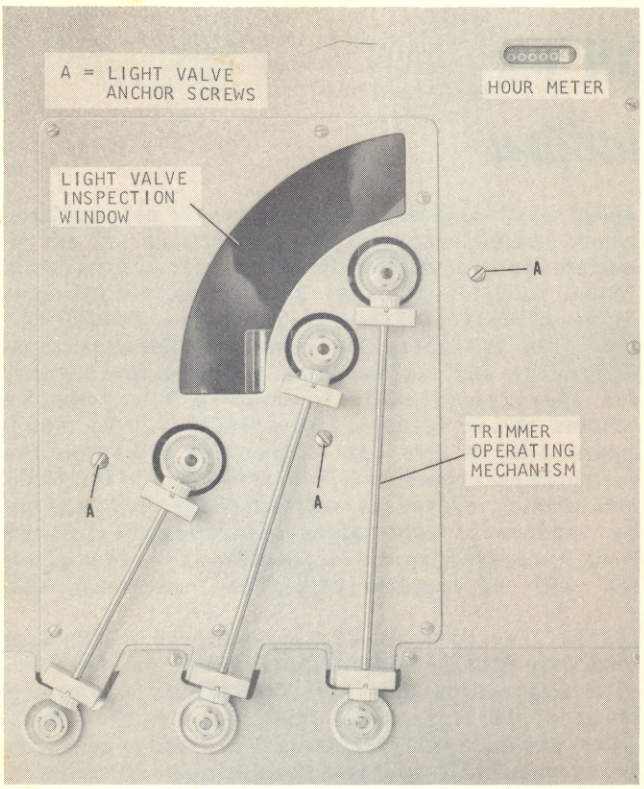

Figure 3. Rear View of Vane Housing

1-2. THE ADDITIVE COLOR PRINTER.

The Series "C" printer operates on the additive color principle, wherein the light from its single 1000-watt printing lamp is split into red, green and blue color beams by selectively reflecting and transmitting dichroic mirrors. Light changes occur while the frame line is at the aperture and between successive scenes, and may be controlled either by the standard film notch or by means of the R-F patch cue system. Dichroic mirrors are located in the optical housing (figure 2) and are readily accessible for cleaning or replacement.

The printer is equipped with three light valves (one for each color beam) and a tape reader which provides the signals to actuate the shutters and reads the program tape for the next scene. The light valves decode the signals and place the decoded information "in memory" so that it will be ready for instantaneous light change. All light valves are identical and each can be replaced as a unit in a matter of minutes.

Each color beam is modulated through 72 light steps of 0.025 Log E, thus providing a total light value range of 1.80. Fifty of these increments are signalled to the memory storage section directly from the tape reader, while the remaining steps can be set manually for variations in emulsion by means of "trim" knobs at the rear of the vane housing (figure 3).

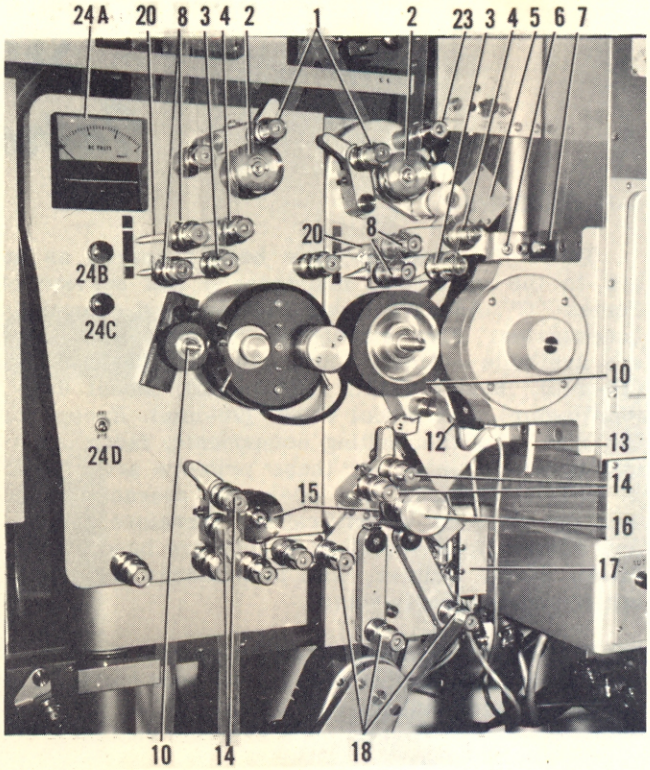

1. Film hold-down rollers (feed)
2. Film feed sprockets
3. Stock guide rollers
4. Negative guide rollers
5. Notch cue switch
6. Feed flange upright clamping screw
7. No. 6 condenser holder
8. Film tension roller assemblies
9. Picture aperture selector lever
10. Film roller gates
11. Outer edge printer (35, 35/32 and 70 mm)
12. Inner edge printer (all)
13. Air intake (picture head)
14. Film hold-down rollers (take-up)
15. Film take-up sprockets
16. Negative film break switch
17. Roller gate cut-off switch
18. Film motion stabilizers
19. Sound aperture selector lever
20. Tension roller threading indicators
21. Soundhead lamp holder
22. Soundhead filter slide
23. 16 mm negative guide roller
24. Soundhead controls:

    a - Voltmeter
    b - Rheostat knob
    c - Dial light rheostat knob
    d - On-off lamp switch

Figure 4. Picture Head Film Path Components

A new-type drive has been designed to remove any irregularities of motion from the film. Highly

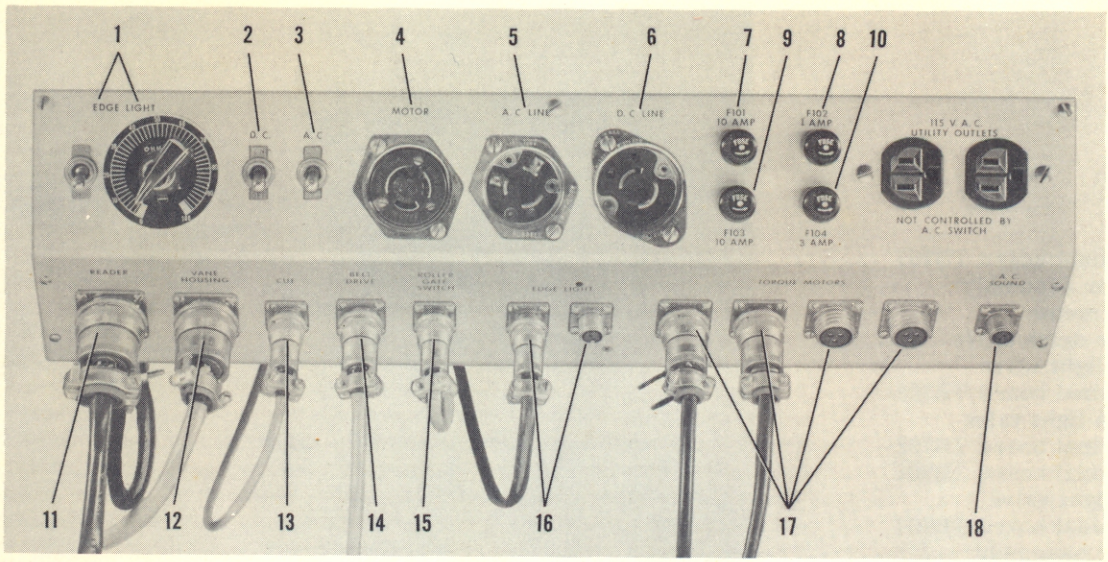

1. Edge light switch and rheostat
2. D.C. main switch (print lamp)
3. A.C. main line switch
4. A.C. outlet to drive motor
5. A.C. input to printer
6. D.C. input to print lamp from 1000W rectifier
7. Fuse A.C. high main line (F101)
8. Fuse R.F. cuer line (F102)
9. Fuse accessory outlet line (F103)
10. Fuse dynamic brake D.C. line (F104)
11. To reader
12. To vane housing
13. To TB1 on picture head (cue and film break switch)
14. To belt drive assembly
15. To roller gate and thread light switch
16. To edge lights
17. To take-ups
18. To soundhead power supply when installed
19. To R.F. cuer when installed
20. To push button assembly

NOTE: Items 19 and 20 are on opposite side of panel (not shown in this view, see figure 1).

Figure 5. Printer Control Panel

polished film transport rollers are mounted on permanently-lubricated ball bearings for smoothest possible film advance (figure 4). A neoprene roller gate maintains a constant light pressure against the back of the positive film to assure positive contact at the film aperture. A jet of compressed air, directed against the aperture from within, further assists in maintaining film contact and also serves to keep the aperture free of dust and lint. Separate edge printing has been provided at the aperture through openings between the sprocket teeth. The edge printing light intensity is separately controllable. On 35-mm, 35/32-mm and 70-mm models, edge printing is provided at both edges of the film to permit heads or tails printing. The film transport housing is made of cast aluminum. The film stabilizer rollers below the take-up sprocket incorporate a negative break switch to stop the printer in case of negative breakage or a parted splice.

All controls, indicators and quick disconnects are clearly identified and readily accessible. The electrical connections to the printer, including those for R-F cue kit and soundhead installation, are provided on the printer control panel (figure 5). Here also are located the main AC-DC switches and the non-switched AC convenience outlets for accessories and test equipment. The push button switches at the front console switch panel provide finger-touch control for starting and stopping the printer, whether in automatic or

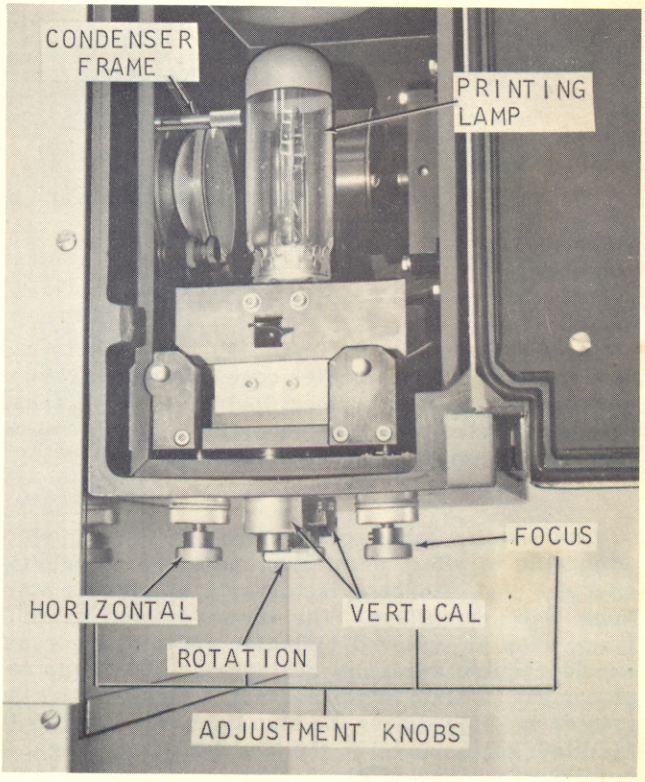

Figure 6. Printing Lamp Housing Interior

1. Terminal board TB707
2. Blower assembly
3. Hour meter
4. Fader drive shaft
5. Blue light valve
6. Terminal board TB703
7. Green light valve
8. Terminal board TB702
9. Terminal board TB701
10. Red light valve
11. Terminal board TB704
12. Fader assembly
13. Terminal board TB705
14. Terminal board TB706
15. Lamp rheostat, coarse
16. Lamp resistor (lo circuit)
17. Mercury relay (D.C. lamp)
18. Transformer (indicator lights)
19. Adjustable tap resistor (indicator lights)
20. Gears for front trimmer controls

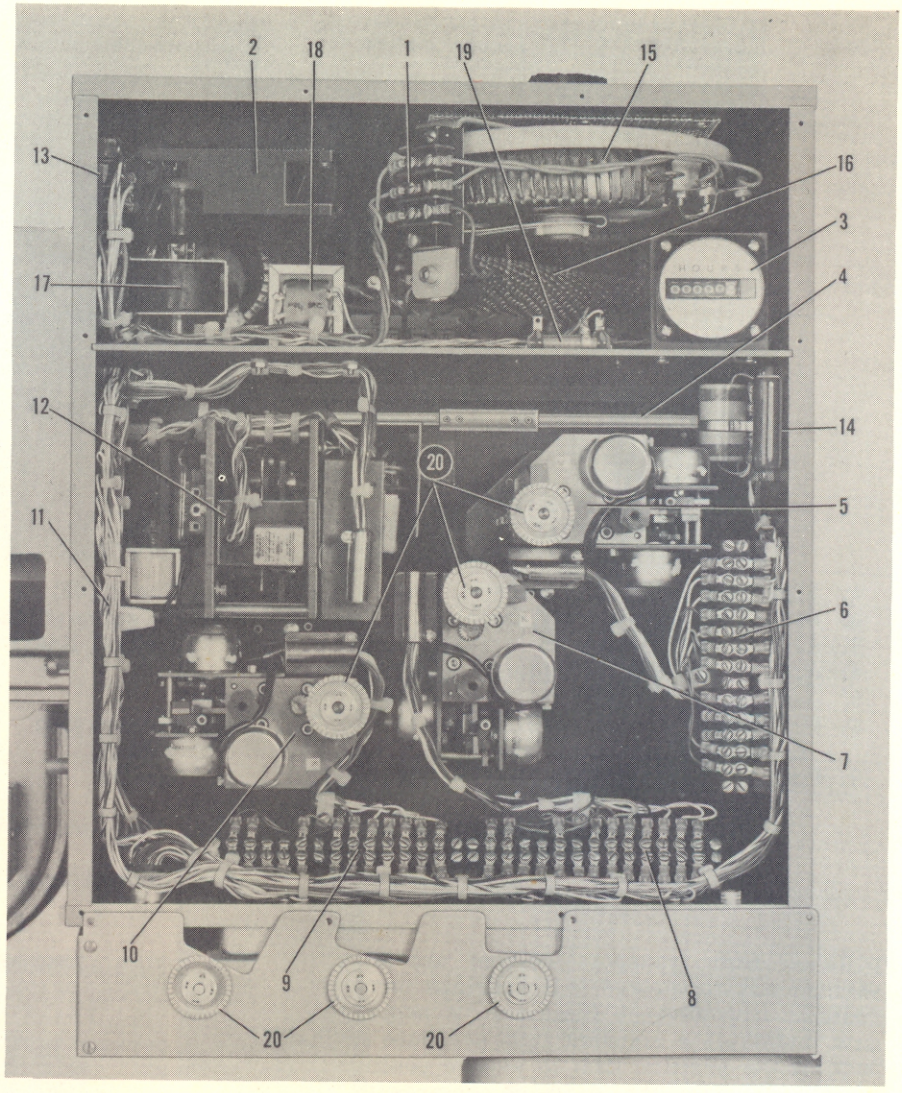

Figure 7. View of Vane Housing with Rear Plate Removed

test operation. Other printer controls and indicators, mounted on the vane housing, include a DC voltmeter with illuminated dial. The intensity of dial illumination can be varied to suit the operator.

The printing lamp socket (figure 6) is completely adjustable to effect even illumination at the printing aperture and has been factory-set to provide optimum light conditions. The blower-cooled printing lamp, uses an external reflector and pin-type base, should require minimum realignment after lamp replacement. A lamp alignment target supplied with the printer is slipped over the blue light valve shutter to facilitate realignment. In the Model MB, this target is permanently fixed in place. The lamp ejector lever facilitates lamp removal. The lamp cannot be switched on without AC being switched to the lamp and rheostat blowers.

The lamp circuit incorporates a voltmeter with an internally illuminated dial with illumination level control, two variable rheostats, one permanent value resistor and a two-way switch (HI-LO) to switch this resistor in or out. One of the variable rheostats is for fine tuning and the other is for coarse voltage adjustments. The total range of voltage is approximately from 70 volts to 114 volts. The knob for fine adjustment is located on the instrument panel and the coarse adjustment is on top of the vane housing. The rheostats and the fixed resistor are mounted in

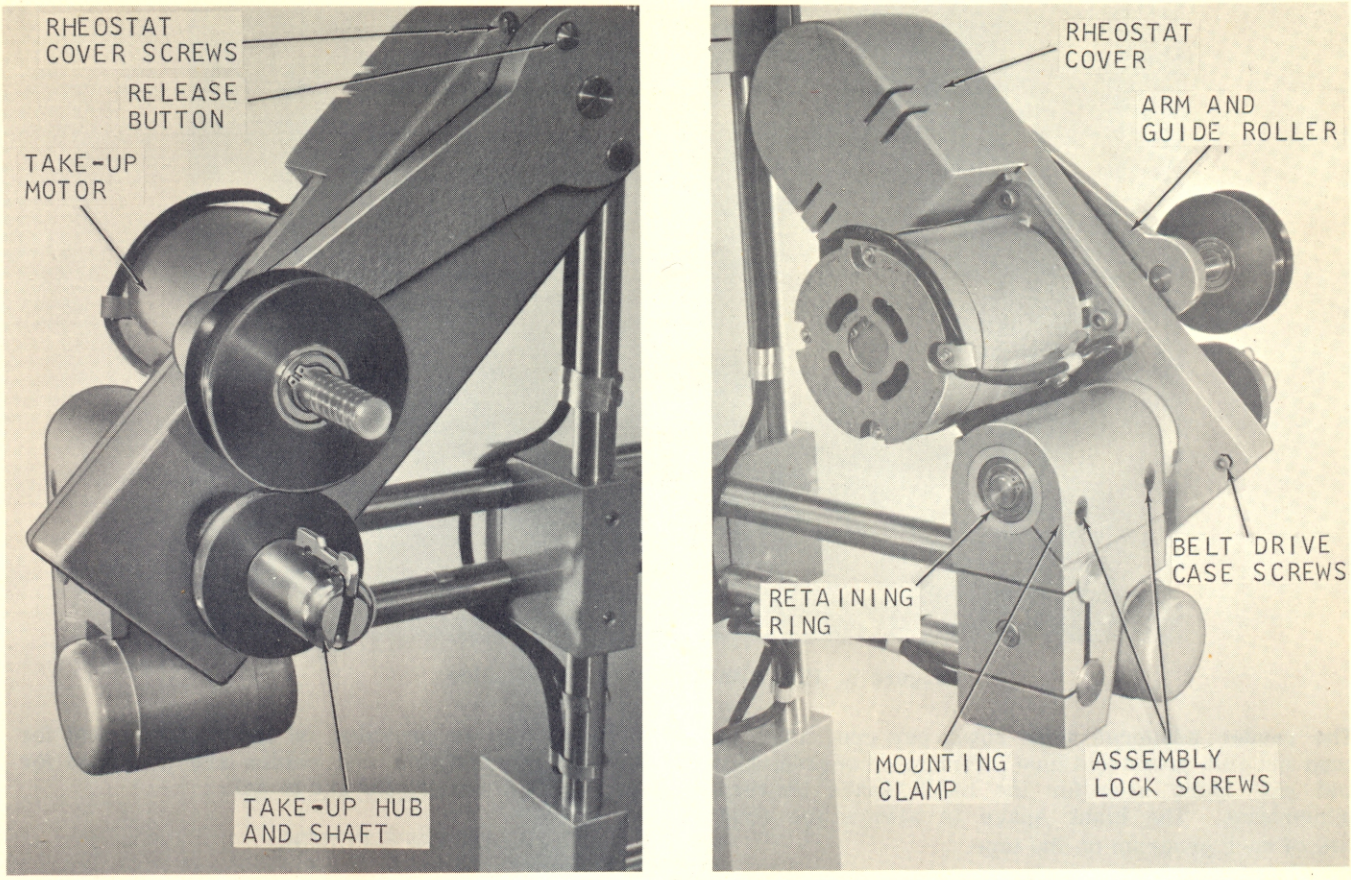

Figure 8. Take-Up Assemblies (Tight-Winds)

the upper confined section of the vane housing with cooling air supplied by a small blower. The top of the vane housing is provided with air vents which permit the escape of heated air. These vents should not be covered with extraneous material during operation.

The fader assembly (figure 7) is mounted within the vane housing and will provide fade lengths of 16, 24, 32, 48, 64 and 96 frames. The fader is positively driven from the film transport so that fades will always be of the chosen length regardless of printer operating speed. The particular length of fade for any given scene is selected by punching the appropriate code into the control tape during the perforating operation.

The 70-mm printer has a film capacity of 3000-feet; all others, 2400-feet. The feed reels accept standard raw stock cores, and a friction brake acts on the film roll to insure even unwinding from full to empty core. The "tight-wind" design of the take-up assembly (figure 8) incorporates an automatic torque control feature — a guide roller and rheostat combination which continuously regulates the torque of the take-up motor to insure proper film wind throughout the entire reel of the film.

The assembly lock screws, shown in figure 8, lock the radial position of the belt drive case within the mounting clamp.

The program tape reader is mounted on a table-like projection below the lamp housing (figure 9). The tape reader performs the function of reading the information from the program tape. The unit is of the intermittently operating pin-sensing type where the operation is under control of a camshaft which makes a single revolution to read each line of code.

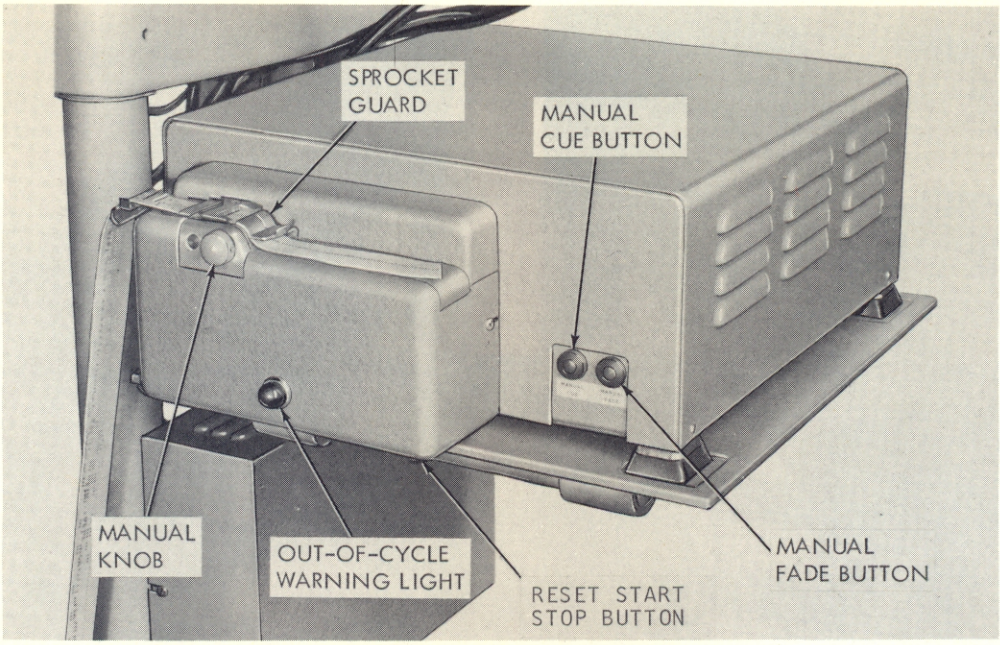

Figure 9. Program Tape Reader Installed

The reader advances four rows per cue, three to read out red, green and blue information sequentially and one more step for the blank space between information. The blank space is always the first row of each program on the tape.

The tape reader is the heart of the automatic operation of the printer. By "reading" the perforated tape, it creates properly timed signals to select the intensity of the three color light beams, to select the proper fade length and to start and stop the printer. In addition, the printer contains the means by which it can check its own functions for proper sequence and will stop the printer immediately in case of a malfunction which would otherwise cause the print to be unusable. See paragraph 3-11 for theoretical description of the reader.

The DC power supply mounted on the legs of the base supplies 150 volts DC to certain relays, switches and solenoids in the printer and the reader for operation. Silicon rectifiers are used for rectification. Stabilization of the current under load is accomplished by the use of a transistorized capacitance multiplier in the circuit. Quick disconnect cables are used for connections to the reader and the printer vane housing. It should be noted that this is not the DC supply for the printing lamp. However, this DC supply is also used to supply the current for the dynamic braking of the drive motor. A voltage stabilizer for this supply is furnished and is mounted on the pedestal base.

The DC supply for the printing lamp is supplied by an external, voltage-regulated source of 115 volts, 1000 watts DC with low AC ripple.

A receptacle is provided on the control panel for the cable connection and cables are furnished for connection to the printer and to AC.

1-3. PROGRAM TAPE PUNCH.

Since the Additive Color Printer requires perforated tape for automatic operation, at least one Program Tape Punch is required for each laboratory installation. The Design 6170D Tape Punch consists of two units (the keyboard unit and the perforator unit) with the interconnecting cable (figure 10). The keyboard unit includes three colored indicator lights (red, green and blue), an automatic scene counter, and sixty-three push buttons for color control, zero close, the six fade lengths, black and white mode of operation, correction, end, and start. The keyboard automatically indicates the sequence of color information being coded in each scene and provides a blank spacing in the program tape to separate the light change information.

1-4. PROGRAM TAPE CHECKER-DUPLICATOR.

The Design 6173D tape-checker-duplicator (Figure 11) consists of three units with the necessary interconnecting cables and plays a dual role in Additive Printer operation. The checker unit can be used to quickly verify a coded tape by indicating the scene or cue number, red, green, or blue color program, light value coded for each color, fade lengths, zero-fades and zero-closes. The reader unit can be cross-connected to the tape perforator unit of the Program Tape Punch Set to produce duplicate program tapes in any quantity. Corrections and/or added programs (insertions) also can be made, if required, while duplicating.

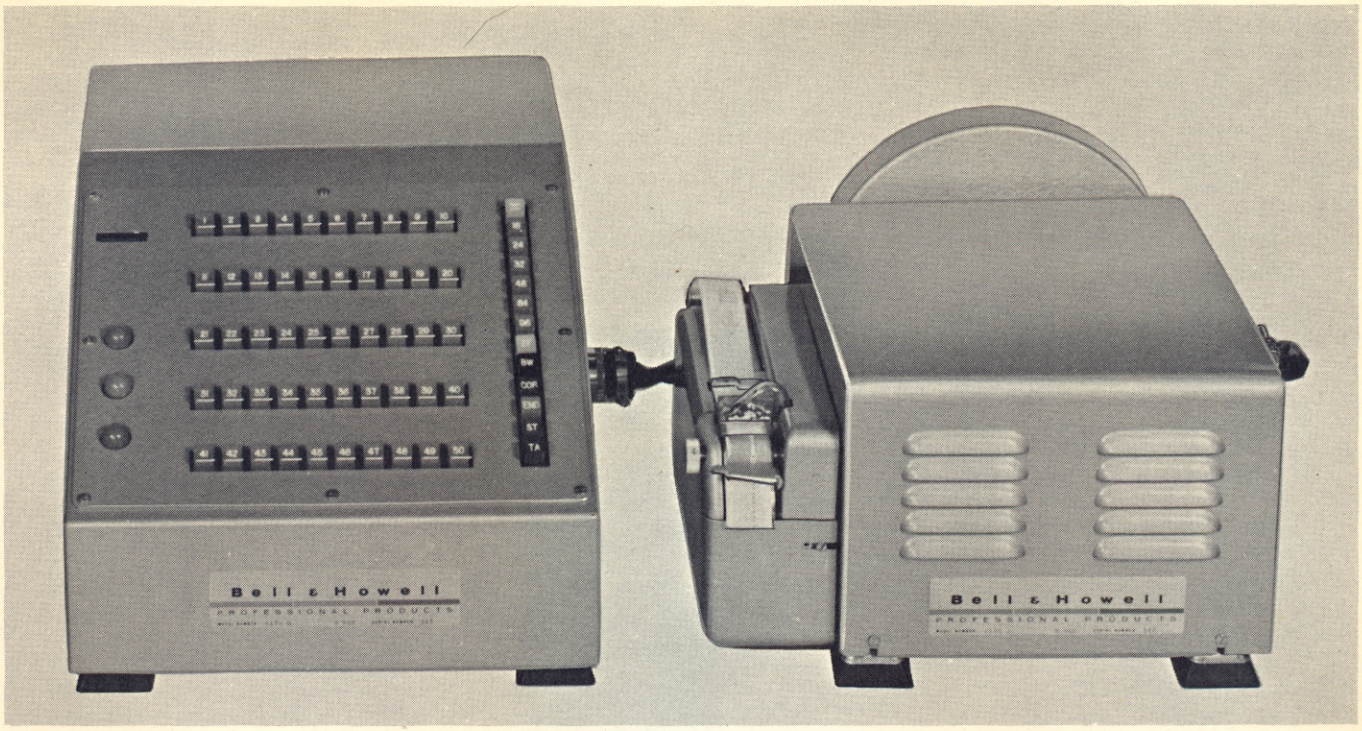

Figure 10. Program Tape Punch and Keyboard

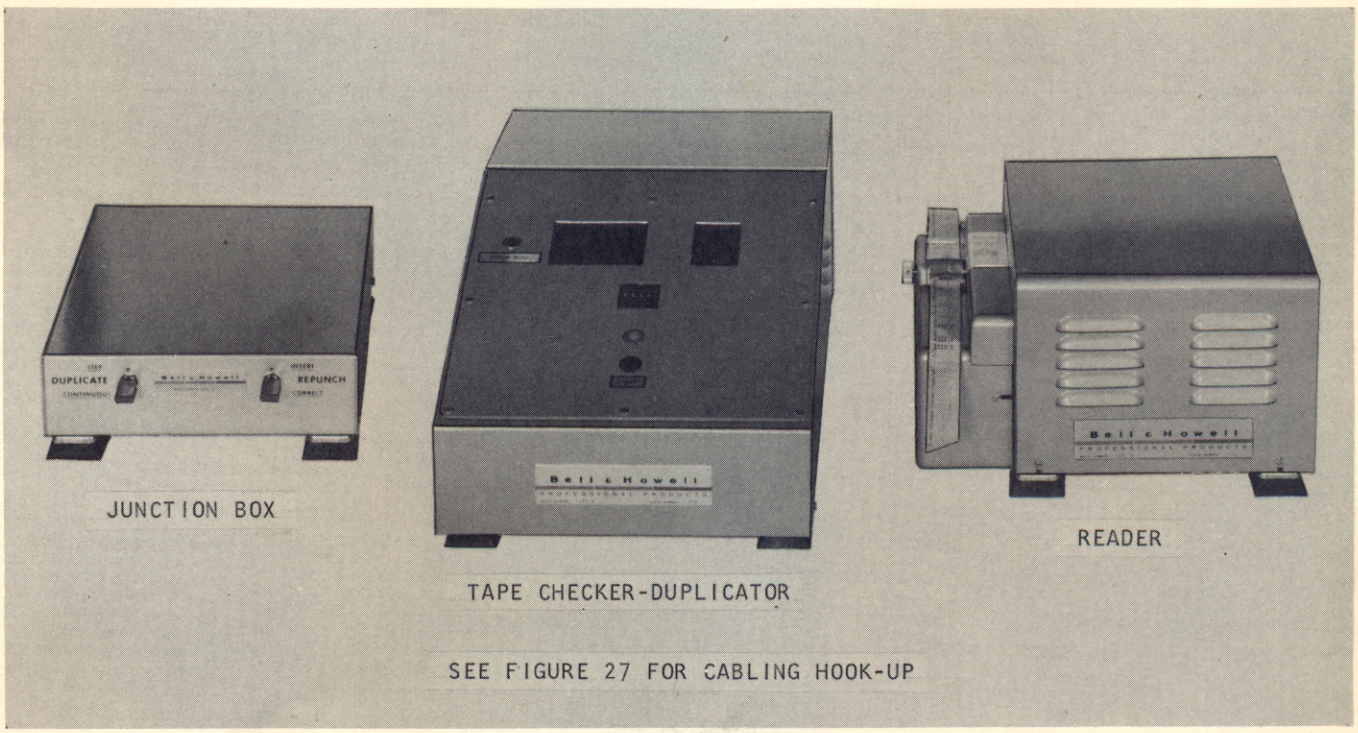

Figure 11. Program Tape Checker-Duplicator Set-up

SECTION II

Assembly and Installation

TABLE OF POWER AND AIR REQUIREMENTS

A.C. POWER:

Printer with Soundhead:	110-125 VAC, 50 or 60 CPS, single phase, 1.5 KW (10 amps)
Tape Punch:	110-129 VAC, 50/60 CPS, single phase, 200 W
Checker-Duplicator:	110-120 VAC, 50/60 CPS, single phase, 200 W
1000 W Rectifier: (Design 6160-A)	110-130 VAC, single phase, or 220-260 VAC, 60 CPS, 1.5 KW (10 amps), regulated: 100-130V; R.M.S. ripple voltage: 1% maximum
1000 W Rectifier: (Design 6160-B)	110-130 VAC, single phase, or 220-260 VAC, 50 CPS, 1.5 KW (10 amps), regulated: 100-130V: R.M.S. ripple voltage: 1% maximum
Wall Receptacles:	To accept standard 3-prong plugs

D.C. POWER (Usually obtained from 1000 watt rectifier listed above):

120 VDC at 9 amps

AIR DATA:

Air Exhaust:

Print Lamp Blower:	60 CFM
Rheostat Blower:	65 CFM

Air Pressure for Printing Apertures (see Note*):

Picture:	2-1/2 psi at gage placed in line to printer
Sound:	2-1/2 psi at gage placed in line to printer

*Note: Air flow at apertures measured on a velometer (average recordings with instrument placed at aperture centers).

35 mm aperture with 3 psi in line
Flow: 1500 FPM

16 mm aperture with 3 psi in line
Flow: 2400 FPM

MOTOR OPERATING SPECIFICATIONS:

Drive Motor:	Single phase, two-speed induction motor, 50-60 cps, 3450 rpm for 180 fpm, 1150 rpm for 60 fpm (1725 rpm for 90 fpm-special) on 60 cps. 50 cps units are equipped with a special motor pulley to attain correct printer operating speeds. Operating speed attained within 3 feet of film.
Reader Motor:	50-60 cps. 50 cps units may shortly be equipped with special pulleys to attain correct reader operating speed.

At present the following relationship exists between Reader motor speeds at 50 and 60 cps and minimum scene lengths allowable on printer at 180 fpm:

Motor Speed:	1725 rpm at 60 cps; -350 ms per cycle = 44 frames min.
Motor Speed:	1425 rpm at 50 cps; -425 ms per cycle = 53 frames min.

CAUTION: When unpackaging printer assemblies and accessories, DO NOT thrust metal pry bars or other sharp implements into wooden crates or cardboard cartons. Each light valve is packaged separately and must be handled with extreme care. DO NOT manipulate the light valves manually. DO NOT touch the light valve shutters with hands or tools. During assembly and installation procedures, refer to the accompanying assembly blueprint and to illustrations in this manual for visual reference of proper assembly of components.

2-1. LIGHT VALVE INSTALLATION.

The light valves have been packed separately. After removing the valves from their styrafoam containers, remove cellulose sleeves and plastic covers from shutters.

a. Remove the rear vane housing plate and free the three cables inside the housing from their packing.

NOTE: Valves are interchangeable in the red, green or blue locations. See page 72E, paragraph a.

b. Carefully insert the valve in its position in the mounting plate, being sure that the shutter assembly does not bump the edge of the large hole during the insertion.

c. Orient each valve assembly according to figure 12. By opening optical compartment door for backlight, mounting holes in the valve and the plate can be lined up. (Hold each valve in place by hand until screws are drawn up finger-tight).

d. Tighten the two long screws securely with the 3/16-inch socket tool furnished.

e. Connect the cables to valve receptacles. Cable for the blue valve emanates from the terminal board at the right wall of housing (seen from rear of the printer). Cables for the red and green valves originate on the floor terminal board directly beneath these valves.

NOTE: Step f following, may be delayed until operational tests (paragraph 2-7) are completed.

f. Reinstall the vane housing rear plate. See page 72E, paragraph b.

NOTE: Save the light valve packaging, if possible, for further use in reshipment if required.

2-2. MOTOR AND BELT DRIVE INSTALLATION (Figure 13).

a. Rotate the stycast drive coupling disc at the back of the gear case to determine that the gear drive and sprockets have not been damaged in shipment.

b. Mount the drive motor and belt drive assembly, aligning the studs on the coupling with the holes in the stycast disc before sliding the assembly into the gear case. When the assembly is in far enough to engage the coupling, rotate the assembly as required to cause the belt drive case to rest firmly on the base. When belt drive case is flush with gear case, tighten the large Allen setscrew.

c. Connect the cable into "Motor" receptacle on control panel. Connect the 10-1/2-inch long cable (with 6 pin connectors) to receptacle on the belt drive case and to the "Belt Drive" receptacle in control panel.

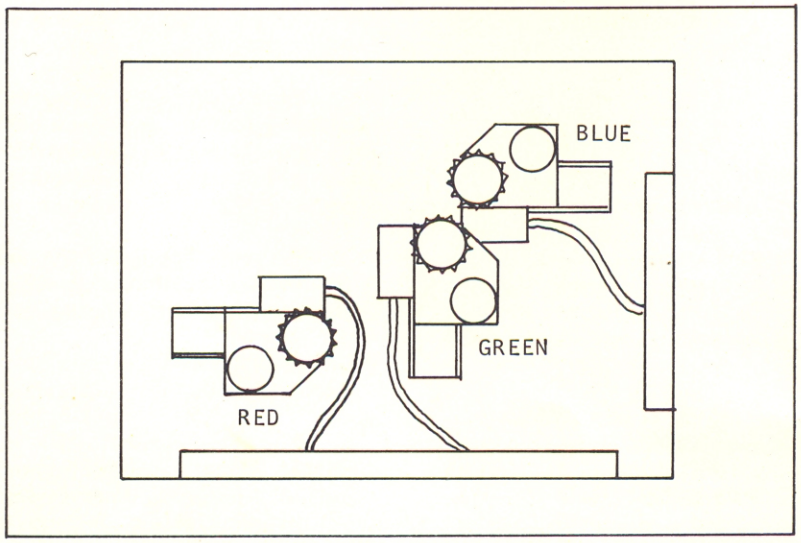

Figure 12. Proper Orientation of Printer Light Valves

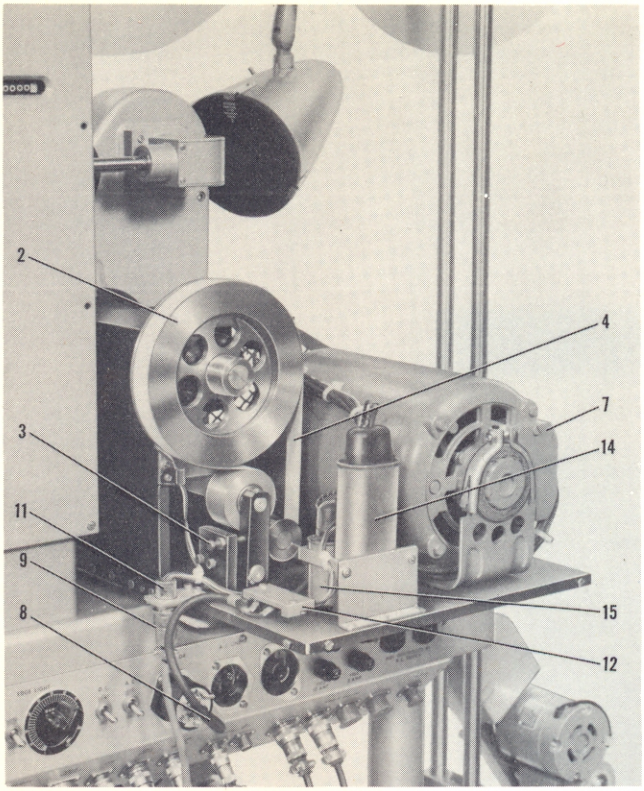

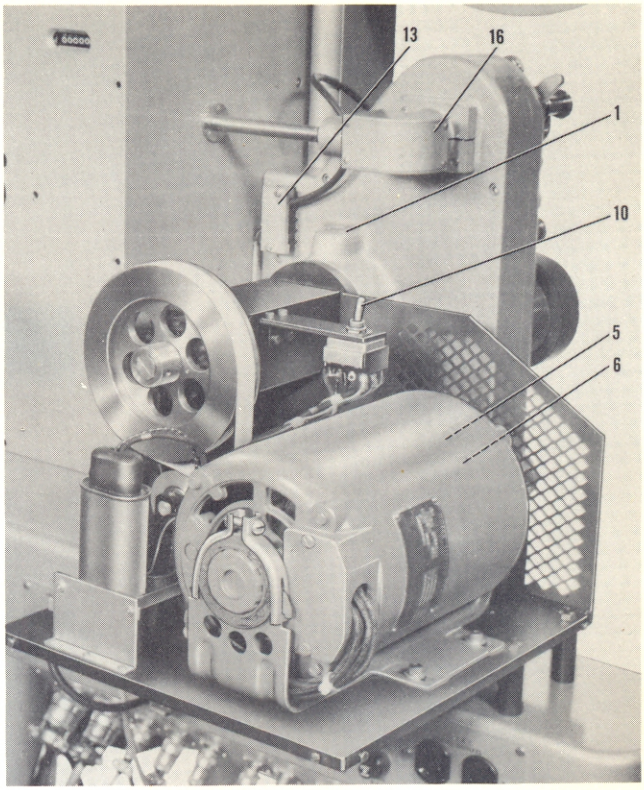

1. Allen mounting screw
2. Flywheel
3. Tension roller adjustment (for #4)
4. Belt, intermediate shaft
5. Tension roller adjustment (for # 6 - hidden behind the motor)
6. Belt, motor driven (hidden behind the motor)
7. Drive motor
8. Cable, motor to panel
9. Cable, belt drive to panel
10. Speed change switch, S1004
11. Connector, J1001
12. Terminal board, TB1001
13. Terminal board, TB1
14. Capacitor, C1001
15. Capacitor, C1002
16. Fader power take-off gear case

Figure 13. Motor and Belt Drive (Safety Cover Removed)

2-3. TAKE-UP AND FEED FLANGE INSTALLATION (Figure 1).

For Printers Without Soundhead.

a. Mount the stock take-up assembly onto the outer end of the tight-wind hangers (38). The negative take-up will be in place. Lock in position with the screws (37). Connect motor cables to "Torque Motor" receptacles on rear of control panel. Figures 1 and 8 illustrate the take-ups properly installed on the printer.

b. The feed flanges need only to be swung into position by loosening either the screws (27) or the clamping screws in the feed flange hub casting. The latter will allow the flanges to be aligned with each other as well as vertically. After aligning the assembly, tighten the clamp screws that had been loosened. Figure 1 illustrates the feed flanges properly installed on the printer.

For Printers With Soundhead (Figure 4, Section VII, Soundheads, 16 or 35 mm).

c. Mount the sound negative take-up and the stock take-up onto the hangers as shown in the figure. Notice that the stock take-up is the one on which the guide roller arm swings upward in a counterclockwise direction.

d. The sound negative feed flange is to be mounted where shown in the figure. The other two are treated as in "Printers Without Soundhead" above.

2-4. READER INSTALLATION (Figure 1).

a. Install shelf (16) into the two right-hand legs.

b. Place the reader (15) on shelf (figure 9). Connect the 32-inch, 5-pin cable from the reader to the transformer which is to be mounted on the base and the 19-inch, 5-pin cable from the transformer to the "DC Power Source for Printer." The power source is mounted on the pedestal legs underneath the Reader. (Refer to figure 15 for cable connections.)

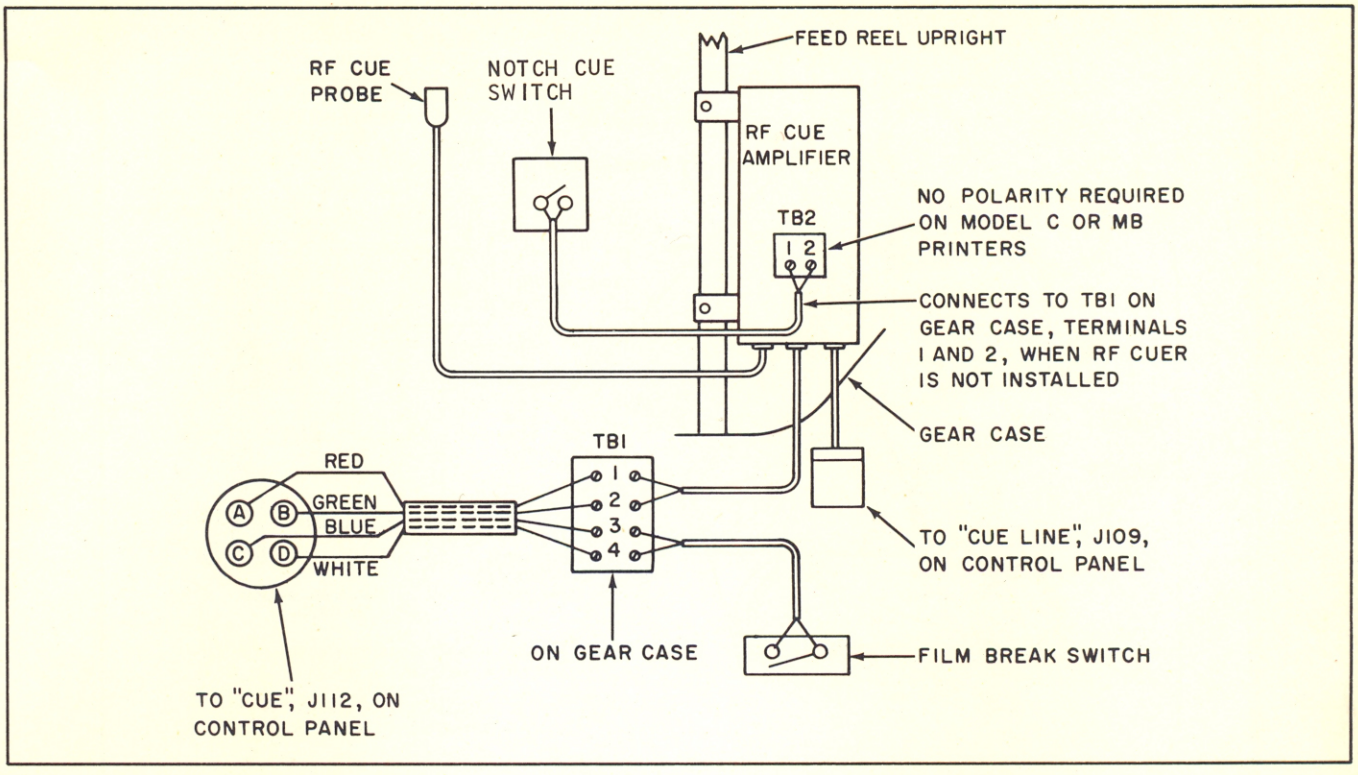

Figure 14. RF Cuer Amplifier Installation (Design 6395-D) (Sheet 1 of 2)

c. Connect 25-inch, 41-pin cable (42) from reader to receptacle under rear corner of vane housing.

d. Connect 15-inch, 11-pin cable from reader to "Reader" receptacle on control panel.

2-5. RF CUER INSTALLATION (Design 6395-D).

a. The transistorized RF cuer amplifier mounts to the upright of the feed flange support assembly. Wiring connections are made as illustrated in figure 14 (Sheet 1 of 2).

b. The feed sprocket must be removed to permit the installation of the probe and roller mounting device. Place a pencil mark on the sprocket hub and shaft so that the sprocket can be reinstalled in the same position during its reassembly. Refer to figure 14 (sheet 2 of 2) for remainder of installation.

c. Insert the probe holder into its bracket and tighten screw (1) just enough to hold. Install the probe holder bracket in its approximate position on the roller stud and tighten the locking screw (2).

d. Install the adapter on the roller stud so that it is flush with the end of the stud and tighten the locking screw (3) securely.

e. Mount the adapter of this assembled group on the bearing sleeve. Rotate adapter to the position shown in figure 14 (sheet 2) and move it toward or away from the gear case to align the nylon roller with the film. With film in correct alignment over the nylon roller and rollers A and B, the relieved area of the nylon roller must match the film area which it is to clear. The nylon roller has a flange on the outside edge which will facilitate film alignment. The adapter position and roller alignment adjustments must be made simultaneously and the adapter then locked in position with locking screw (4). When correctly positioned, the lowest corner of the adapter will be approximately 1/16-inch above the tension roller spring case with the latter in a horizontal position. Make certain that the locking screw (4) is securely tightened.

f. Loosen locking screw (2) and slide the probe holder bracket back firmly against the adapter; then tighten screw (2) securely. Loosen locking screw (1) and adjust the probe holder slightly so that the center of the probe will be directly centered with the cue patch when the film is aligned on all three rollers as outlined in step e, preceding. Tighten screw (1) securely.

NOTE: The probe holder bracket is adjustable for frame line cue synching and should be left in the above position until a film test has been made to determine how much adjustment is necessary when operating at 180 fpm.

g. Insert the probe carefully down into the probe holder until the sensing end of the probe is approximately 0.012-inch above the patch, and tighten the locking screw (6) securely. Note that if the patch is applied to the emulsion side of the film, there will be an additional 0.006-inch of spacing set in by the thickness of the film. Since the film material will

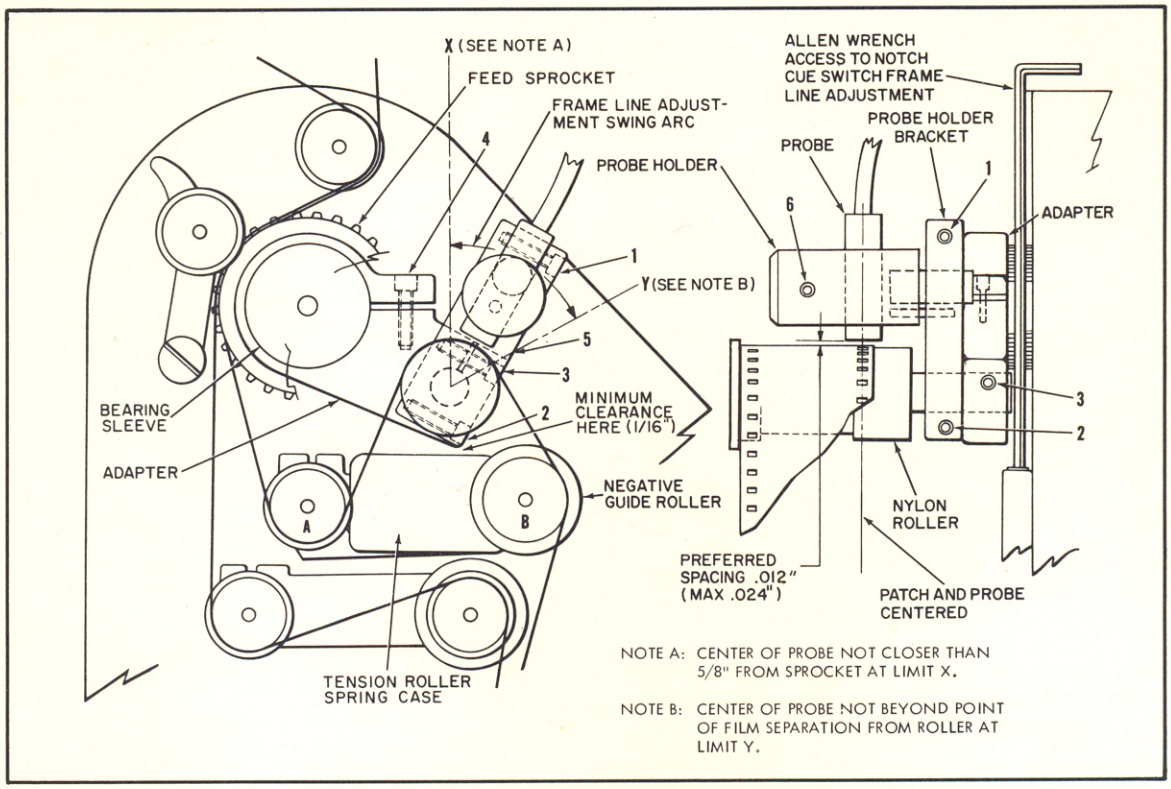

Figure 14. RF Cuer Amplifier Installation (Design 6395-D) (Sheet 2 of 2)

not interfere with the sensitivity of the probe, it is suggested that the probe be set at 0.012 inch from the film surface. This will provide a distance of 0.018 inch from probe to patch, which is still within acceptable tolerance.

h. When reinstalling the feed sprocket, install a screw into the tapped hole in the end of the feed sprocket shaft. Grasp the screw and pull outward on the shaft while pressing the sprocket firmly in place and tightening its setscrews. No end play is required. Remove the screw from the sprocket shaft. Refer to paragraph 4-6 for RF cuer adjustments.

2-6. FINAL ELECTRICAL CONNECTIONS (Figure 15).

a. Connect the 24-inch cable from receptacle under rear corner of vane housing to "Vane Housing" receptacle on bottom of control panel (8 pin connector).

b. Connect cable from push button group to "Push Button" receptacle on bottom of control panel (8-pin connector).

c. Connect two cables (1 on 16-mm) from edge printers to "Edge Light" receptacles on bottom of control panel (2-pin connectors).

d. Connect cable from terminal strip on rear of gear case to "Cue" receptacle on bottom of control panel (4-pin connector).

e. Connect AC line cable to "AC Line" receptacle on rear control panel (3-pin receptacle, polarized).

NOTE: Polarity of laboratory wall outlet must coincide with the coding of the AC power plug furnished with printer which is coded as follows and must be wired accordingly.

Pin "GR" (Brass) to Ground
Pin "B" (Brass) to AC - Hi (or hot line)
Pin "C" (Copper) to AC - Lo

It is recommended that the wire from "GR" in the plug be connected to building ground in any case. It is further recommended that if one pole of the AC line is on ground, this pole be connected to pin "C" (AC - Lo). Regulated AC voltage (to 117 volts) is recommended for the most reliable operation. The printer has been tested, however, for operation at 110 to 125 volts. Alternating current to the DC power supply for relay and light valve operation is regulated to the proper operating voltage by the transformer supplied with the printer.

f. Connect the 1,000-watt rectifier (for printing lamp) to "DC Line" receptacle on rear control panel. (Cable is furnished with Bell & Howell rectifier, with plug to fit receptacle in printer). Connect rectifier to 110-118 volt AC, 60 cycle, (cable furnished with Bell & Howell rectifier). Turn rectifier switch to ON. Other appropriate 1,000-watt, 120 volt, DC supply may be utilized if Bell & Howell rectifier is not available.

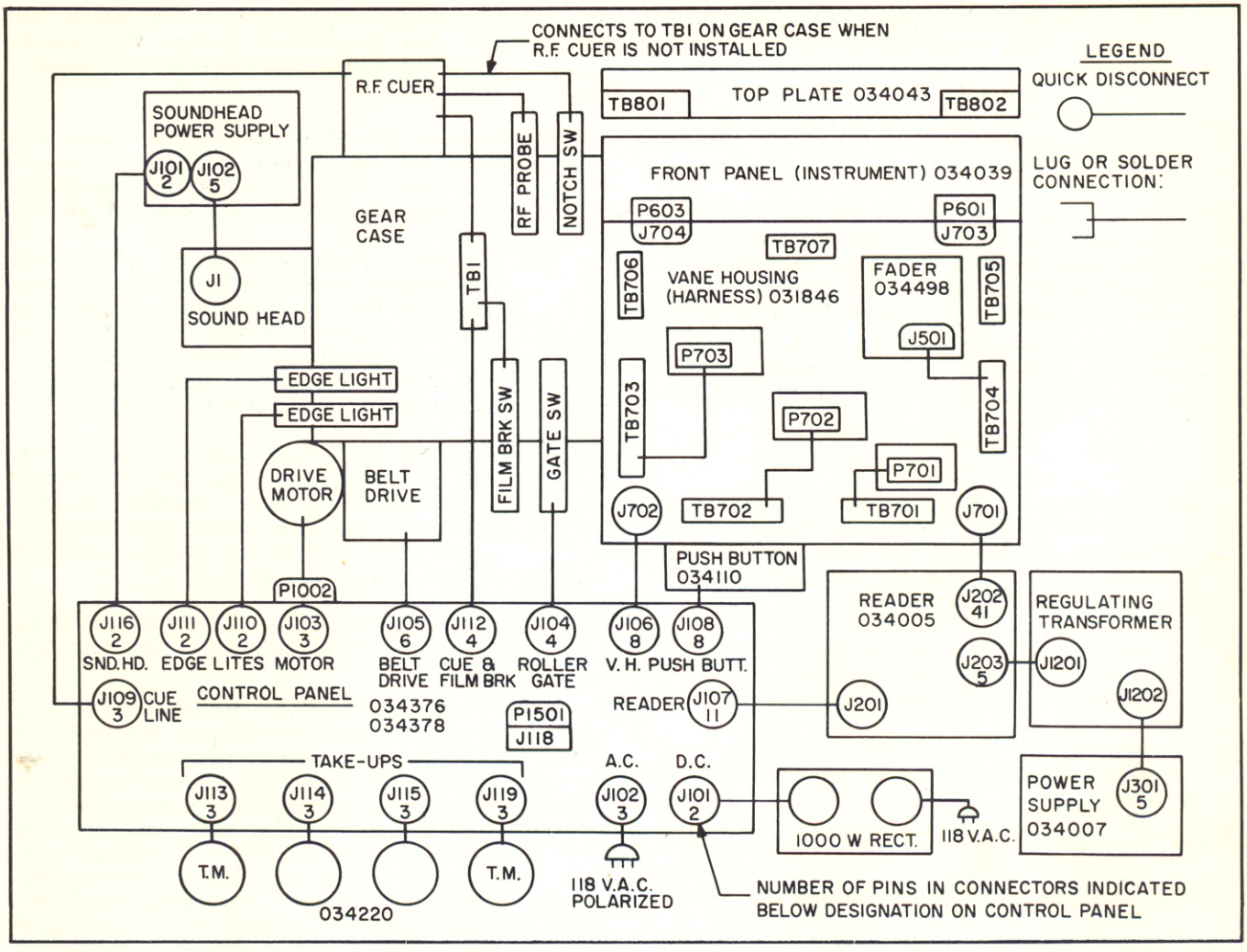

Figure 15. Printer Cable Connections

g. Open the lamp house door by pressing the button on top, insert the printing lamp, and press to bottom of its socket. Install the two heat absorbing glasses between the two condensers. These have been packed separately. Ascertain that the assembly holding the heat glass and two condensers in the lamp house is locked with the two snap fasteners, and that the cover glass behind this assembly is in place with its snap ring locked.

In the 16- and 35-mm models, check for correct positioning of the No. 6 condenser slide (see figure 4). This slide is located on upper side of film transmission gear case and must be as far down in its slot as it will go. The slide for the 70-mm model is inside the vane housing, ahead of douser.

2-7. PRE-TESTING PRINTER OPERATION.

Before production operation of the printer, it is recommended that the equipment be pre-tested to check the operational functioning of printer controls and major components. This pre-testing is best accomplished in two stages: first, perform the non-automatic test (without tape) as outlined in step a, following; then perform the automatic test with tape as outlined in step b, following.

a. NON-AUTOMATIC OPERATION TEST (Figure 1).

(1) Flip the AC and DC switches, located on the rear control panel (34), to "on."

(2) As a precautionary measure, depress the STOP button located on the push button panel (14).

(3) The POWER and MOTOR switches are located on the instrument panel (10). Press the MOTOR switch to ON; momentarily hold the POWER switch at the center of its throw; then press it slowly up into the ON position. At this point, the reader motor will operate. The safelight now will light when its switch is actuated. Also, the DC voltmeter dial, one speed indicator and one fader position indicator will be illuminated.

(4) Move the tight-wind arm to the up-and-lock position. This opens the circuit to the take-up motors.

(5) Move the belt drive speed switch on belt drive case (2) to "60."

NOTE: The two-speed printer (60 and 180 fpm) has a two-speed motor, and speed changes are made by operating the speed selector switch on the belt drive. The selected speed is indicated by a lighted indicator on the instrument panel (figure 23). A cue delay (for 60 fpm) is effected by switching to 60. This delay will be effective with notch cue and transistorized RF cue (Design 6395D) systems during automatic operation.

(6) Prepare a loop of un-notched film and thread it on the printer, by-passing the lower film motion stabilizers, but using the negative guide roller so that the cue switch will be "open." (See figure 4.)

(7) Depress the buttons on the vane housing instrument panel, thereby resetting the CUE, FADE, and FEET counters to zero.

(8) Depress the AUTO button on the push button panel (14). There should be no responsive action.

(9) Depress the TEST button on the push button panel. This will cause the douser to open and the printer to start operating. Printer speed will accelerate gradually until it attains a running speed of 60 fpm. The footage counter will immediately begin to register (15 feet in 15 seconds at 60 fpm). The take-ups will not operate at this stage.

(10) Depress the STOP button on the push button panel. The printer will stop with dynamic braking and the douser will close.

(11) Move belt drive speed switch to "180" and depress the TEST button. The douser will open and the printer will start to operate, accelerating gradually until it attains a speed of 180 fpm (45 feet in 15 seconds).

(12) Flip EDGE LIGHT switch (figure 5) to the on position and rotate the edge light rheostat. The edge printer (two on 35- and 70-mm models) will light and the brightness will vary with rheostat rotation. The edge light can be observed by opening the roller gate. Stop the printer and note that the edge lights turn off.

(13) Release the tight-wind rollers (see figure 8) and lower them gently to the "down" position.

(14) Depress the TEST button. The douser will open and the take-up motors will begin to operate, commencing slightly before the printer starts.

(15) Depress the STOP button. The douser will close and the printer and take-up motors will stop. Since there is no film on the take-ups, they will coast after the cut-off.

(16) Disconnect the cable from the CUE receptacle located on the underside of the rear control panel (34). Since this cable includes the wire to the film break cut-off switch, the cue switch and film break cut-off switch now will be inactive. Cut a notch in the film loop, using the notcher furnished with the printer.

(17) Raise the tight-wind rollers to the up-and-lock position. This will open the circuit to the take-up motors. Depress the TEST button to open the douser and start the printer. The cue switch, although actuated, will not cause a cue pulse.

(18) Depress the MANUAL CUE button located on the reader. The cue counter will register.

(19) Depress the MANUAL FADE button located on the reader; then depress the MANUAL CUE button. The audible relay action will occur, and the fader will operate through one cycle (open to closed or closed to open, depending on the original fader position) at the 16 frame speed. Both the "cue" and the "fade" counters will register and the fader position indicators will light at the respective positions of the fade shutter. Repeat the test, if necessary, so that the fader is in the "open" position; then press the STOP button.

(20) Depress the reset "start-stop" button located underneath the front right-hand corner of the reader. The douser will open and the printer will start.

(21) Stop the printer by depressing the reset "start-stop" button.

(22) Reconnect the cable to the CUE receptacle located on the underside of the control panel (34).

(23) Start the printer by pressing the TEST button and check to make certain that the cue counter registers as the cue switch is actuated by the notch in the film loop.

(24) Manipulate the voltmeter dial rheostat knob located on instrument panel (10). Dial illumination will vary with rheostat rotation.

(25) Flip HI-LO switch to LO and the LAMP switch up (on) position. Both switches are located on instrument panel (10). The lamp will light, the lamp blower will start, the rheostat blower will start, and the voltmeter will register.

(26) Manipulate the coarse tuning rheostat knob (9) located on top of vane housing and the LAMP FINE knob (figure 23). The voltmeter needle will swing from approximately 70 volts to 94 volts with a 2-3 volt attenuation with the FINE rheostat.

(27) Flip the HI-LO switch to HI and repeat rheostat movements (step 26). The voltmeter needle will swing from approximately 90 volts to 114 volts, and attenuation with the FINE knob will be greater at the high end.

b. AUTOMATIC OPERATION TEST. In automatic operation, it is always necessary to use a program tape. Detailed information on tape preparation and readout will be found in paragraphs 4-3 and 4-4. Prepare four test tapes as indicated in the charts at the end of this section, the tapes to be punched per the "TAPE PROGRAM R-G-B" columns of the charts. In order to obtain maximum instructional benefit from these tests, the vane housing rear cover should be removed, the optical compartment door opened and the printing lamp lighted. Cue pulses should be produced manually by the CUE button on the reader rather than by notches in the negative so that the operator can more readily observe the actions caused by each pulse. Before each "Manual Action" is performed, note the resulting actions which are expected to occur so that these results can be verified as you proceed with the test. Remove relay K2-L from the reader to eliminate the "Auto-First" cue during testing.

(1) Thread printer with two rolls of test film, each at least 1000 feet in length, using 3-inch cores or larger (paragraph 4-7). Set the speed at 180 fpm and set all trimmer knobs at position "24." Refer to the nonautomatic test, paragraph 2-7a, steps (1) through (3), for proper switch positions; then lower the tight-wind guide rollers down on the film cores. Make certain that the "Fader Open" indicator is lit. If not, open the fader with the manual turn knob (44, figure 1).

(2) Prepare a simple tape with only two programs; start, 50-50-50, 20-20-20, end. Use this tape to start and stop the printer a number of times in order to observe the action of the various features and become familiar with printer operating characteristics before running the actual test tapes.

(3) Insert the two-program tape into the reader and press the TEST button on the push button panel. There should be no action. Open the roller gate and check to see that the green synchronization light is lit.

(4) With the roller gate still open, press the AUTO button. The printer will attempt to start on the #8 hole but will stop immediately, and the douser will remain closed.

(5) Close the roller gate and manually ratchet the tape back so that there are a couple of inches of leader behind the reader pins. Synch light should go out.

(6) Press and hold the AUTO button until the printer starts. Manually move the negative lower stabilizer slowly to the right and against its stop to simulate a break in the negative. The printer should stop after a short delay.

(7) Manually ratchet the tape back to the starting point (step (5). Close the fader and press the AUTO button. There should be no resulting action.

(8) Open the fader.

(9) Press and hold the AUTO button until the printer starts. Note the low torque take-up while tape is advancing, changing to full torque when drive motor starts. Also, note gentle acceleration of drive motor. Press MANUAL CUE button repeatedly and at intervals until end hole is read-out and printer stops.

(10) Reset the tape back at the start position and once more start the printer with the AUTO button. This time, by observing the light valve slides at the rear of the vane housing, you will note that the 50-50-50 program has gone into memory. (See paragraph 5-5b, page 59). Also, the douser has opened, but the light valve shutters have not opened.

(11) Press the MANUAL CUE button once while observing the light valve shutters. The shutters now must be wide open (light 50), and the 20-20-20 program will have gone into memory.

(12) Press the MANUAL CUE button once more and note that the shutters have closed down to light 20 and that a zero-close (ZC) has gone into memory.

(13) Press the MANUAL CUE button for the third time. The printer should stop with the shutters and douser closed.

(14) Reinsert relay K2-L back in the reader and repeat the AUTO start procedure, steps (10) through (13) above. Since relay K2-L controls the "automatic first cue" function of the printer, the action noted in steps (10) and (11) will occur without the necessity of pressing the MANUAL CUE button. The first time this button is pressed, the 20-20-20 program will be cued to the light shutters; the second manual cue will stop the printer. It is necessary that relay K2-L again be removed before running the test tapes prepared.

(15) Run the test tapes (pages 16 through 17) through the reader one at a time, observing all actions carefully for the listed expected results.

NOTE: The printer pre-testing procedures outlined in paragraph 2-7, step b, will indicate the normal results to be expected at each stage of operation. Should the normal results fail to occur, refer to the Operator's Troubleshooting Guide, paragraph 4-15 (page 48), for the possible cause and remedy of the malfunction. The troubles are listed in the same sequence as the pretesting procedures and each trouble references the procedural step where the malfunction might occur.

TEST TAPE NO. 1

MANUAL ACTION	TAPE PROGRAM NO. IN MEMORY POSITION	TAPE PROGRAM R G B	TAPE ACTION ON CUE	DRIVE MOTOR	TAKE-UP MOTORS	INTO MEMORY R G B	DOUSER	SHUTTER ACTION (LIGHT VALUE) R G B	THEORETICAL LOG E STEPS	FADE SHUTTERS
Use Tape #1, Set RGB trims to #1								Preset Condition ZC-ZC-ZC		Preset to Open
Depress and hold "Auto" Button			Advance to and cycles 1st program	NONE	Low Torque Start	NONE	CLOSED	NONE	NONE	OPEN
As 1st program is read-release "Auto"	1	START 1-1-1	NONE	RUN	F-T RUN	1-1-1	OPEN	NONE	NONE	OPEN
Manual Cue #1	2	50-50-50	1 cycle	↑	↑	50-50-50	OPEN	1-1-1	.000	OPEN
Manual Cue #2	3	1-1-1	↑			1-1-1	OPEN	50-50-50	1.225	OPEN
Manual Cue #3	4	5-5-5				5-5-5	OPEN	1-1-1	.000	OPEN
Manual Cue #4	5	9-9-9				9-9-9	OPEN	5-5-5	.100	OPEN
Manual Cue #5	6	13-13-13				13-13-13	OPEN	9-9-9	.200	OPEN
Manual Cue #6	7	17-17-17				17-17-17	OPEN	13-13-13	.300	OPEN
Manual Cue #7	8	21-21-21				21-21-21	OPEN	17-17-17	.400	OPEN
Manual Cue #8	9	25-25-25				25-25-25	OPEN	21-21-21	.500	OPEN
Manual Cue #9	10	29-29-29				29-29-29	OPEN	25-25-25	.600	OPEN
Manual Cue #10	11	33-33-33				33-33-33	OPEN	29-29-29	.700	OPEN
Manual Cue #11	12	37-37-37				37-37-37		33-33-33	.800	OPEN
Manual Cue #12	13	41-41-41				41-41-41		37-37-37	.900	OPEN
Manual Cue #13	14	45-45-45				45-45-45		41-41-41	1.000	OPEN
Manual Cue #14	15	49-49-49				49-49-49		45-45-45	1.100	OPEN
Manual Cue #15	16	50-50-50		↓	↓	50-50-50		49-49-49	1.200	OPEN
Manual Cue #16	END	0-0-0	↓	RUN	F-T RUN	ZC-ZC-ZC		50-50-50	1.225	OPEN
Manual Cue #17		END 0-0-0	1 cycle	STOP	STOP	ZC-ZC-ZC	CLOSED	ZC-ZC-ZC		OPEN

NOTE: 1 cycle is 4 revolutions or 4 rows on tape.

F-T RUN means full-torque run.

TEST TAPE NO. 2

MANUAL ACTION	TAPE PROGRAM NO. IN MEMORY POSITION	TAPE PROGRAM R G B	TAPE ACTION ON CUE	DRIVE MOTOR	TAKE-UP MOTORS	INTO MEMORY R G B	DOUSER	SHUTTER ACTION (LIGHT VALUE) R G B	THEORETICAL LOG E STEPS	FADE SHUTTERS
Use Tape #2, Set RGB Trims at #1								Preset Condition ZC-ZC-ZC		Preset To Open
Depress and Hold "Auto" Button			Advance to & Cycles 1st		START		CLOSED	NONE		OPEN
As 1st Program is read-release button	1	ST 1-1-1	NONE	RUN	RUN	1-1-1	OPEN	NONE		OPEN
Manual Cue #1	2	1-1-1	1 Cycle	RUN	RUN	1-1-1	OPEN	1-1-1	.000	OPEN
Set RGB Trims to #24										
Manual Cue #2	3	50-50-50	1 Cycle	RUN	RUN	50-50-50	OPEN	24-24-24	.575	OPEN
Manual Cue #3	END	0-0-0	1 Cycle	RUN	RUN	ZC-ZC-ZC	OPEN	73-73-73	1.80	OPEN
Manual Cue #4		END 0-0-0	1 Cycle	STOP	STOP	ZC-ZC-ZC	CLOSED	ZC-ZC-ZC		

TEST TAPE NO. 3

(F = FADE)

MANUAL ACTION	PROGRAM NO. TAPE	RGB TAPE PROGRAM	TAPE ACTION ON CUE	DRIVE MOTOR	TAKE-UP MOTORS	INTO MEMORY R G B	DOU-SER	VANE ACTION (LIGHT VALUE)	THEORETICAL LOG E STEPS READING	FADE SHUTTER PRE-SET OPEN
Use Tape #3 Set RGB Trims At #1			NONE	NONE	NONE	NONE		NONE	NONE	NONE
Depress and Hold Auto Button		Leader	Advance to & Cycles 1st Program	NONE	NONE	NONE	C	(PRE-SET COND.) ZC-ZC-ZC		NONE
As 1st Program is read-release "Auto"	1	Start, 1-1-1	NONE	START	RUN	1-1-1	O	(PRE-SET COND.) ZC-ZC-ZC		NONE
Manual Cue #1	2	F16, 9-9-9	1 Cycle	RUN	RUN	F16, 9-9-9	O	1-1-1		NONE
Manual Cue #2	3	F16, 9-9-9				F16, 9-9-9	O	9-9-9		C16
Manual Cue #3	4	F24, 17-17-17				F24, 17-17-17	O	9-9-9		O16
Manual Cue #4	5	F24, 17-17-17				F24, 17-17-17	O	17-17-17		C24
Manual Cue #5	6	F32, 25-25-25				F32, 25-25-25	O	17-17-17		O24
Manual Cue #6	7	F32, 25-25-25				F32, 25-25-25	O	25-25-25		C32
Manual Cue #7	8	F48, 33-33-33				F48, 33-33-33	O	25-25-25		O32
Manual Cue #8	9	F48, 33-33-33				F48, 33-33-33	O	33-33-33		C48
Manual Cue #9	10	F48, 33-33-33				F48, 33-33-33	O	33-33-33		O48
Manual Cue #10	11	F64, 41-41-41				F64, 41-41-41	O	33-33-33		C48
Manual Cue #11	12	F64, 41-41-41				F64, 41-41-41	O	41-41-41		O64
Manual Cue #12	13	F96, 49-49-49				F96, 49-49-49	O	41-41-41		C64
Manual Cue #13	14	F96, 49-49-49				F96, 49-49-49	O	49-49-49		O96
Manual Cue #14	END	0-0-0		RUN	RUN	ZC-ZC-ZC	O	49-49-49		C96
Manual Cue #15		END 0-0-0	1 Cycle	STOP	STOP	ZC-ZC-ZC	C	ZC-ZC-ZC	NONE	NONE

TEST TAPE NO. 4

MANUAL ACTION	PROGRAM NO. TAPE	RGB TAPE PROGRAM	TAPE ACTION ON CUE	DRIVE MOTOR	TAKE-UP MOTORS	INTO MEMORY R G B	DOUSER	VANE ACTION (LIGHT VALUE)	THEORETICAL LOG E STEPS READING	FADE SHUTTER *PRE-SET CLOSED
Test Tape #4 Trim #1			START	NONE	NONE	NONE		NONE	NONE	NONE
Depress and Hold Auto Button		LEADER	Advance to & Cycles 1st Program	NONE	START	NONE		NONE		NONE
As 1st program is read-release "Auto"	1	START F16 25-25-25	NONE	START	RUN	F16, 25-25-25	O	ZC-ZC-ZC		NONE
Manual Cue #1	2	ZF16	1 CYCLE	RUN	RUN	F16, ZC-ZC-ZC	O	25-25-25		O16
Manual Cue #2	3	ZF16				F16, ZC-ZC-ZC	O	ZC-ZC-ZC		C16
Manual Cue #3	4	1-25-25				1-25-25	O	ZC-ZC-ZC		O16
Manual Cue #4	5	1-1-25				1-1-25	O	1-25-25		NONE
Manual Cue #5	6	1-1-1				1-1-1	O	1-1-25		NONE
Manual Cue #6	END	0-0-0		RUN	RUN	ZC-ZC-ZC	O	1-1-1		NONE
Manual Cue #7		END 0-0-0	1 CYCLE	STOP	STOP	ZC-ZC-ZC	C	ZC-ZC-ZC	NONE	NONE

*NOTE: For the fader to be preset "closed", remove relay K2-X from reader and provide jumper between contacts 1 and 9 of relay socket. This will eliminate the "no-start on fader closed" feature.

2-8. PRE-TESTING LIGHT BEAM BALANCE AND ILLUMINATION LEVEL.

Upon completion of the operating tests outlined in paragraph 2-7, it is important that a pre-test be made of light beam balance and illumination level. Such a test cannot be made, however, until the printing lamp has been adjusted (paragraph 5-8) and you are assured that the uniformity across the frame is satisfactory. Then proceed as follows:

a. It is first necessary to determine what settings are to be used to print a negative or an original accepted as being "normal." For this purpose, it is advisable to use a test film which has a normal scene, preferably with a predominant area of recognizable flesh tones, plus reds, greens and blues. The test film should also include a step wedge and color patch. The settings arrived at in the pre-testing procedure then may be used as a basis for future computations on other originals or negatives that are viewed in comparison with the known "normal."

CAUTION: Each type of printing material will require a different basic balance. Also, it should be noted that various emulsion batches may differ in their responses.

b. Obviously, the most desirable printer settings would be those that would print a normally exposed negative or reversal type film with well-balanced color under the following conditions: (1) A lamp voltage setting that would insure the longest possible lamp life; (2) Operation at the highest operating speed; (3) A light number setting that would permit considerable range up or down in illumination level; (4) Trimmer settings that would be in mid-range so that compensation could be made for emulsion variations without the necessity of re-programming a reel. Form the test film into a short loop with a single cue notch or patch and thread it on the printer together with the negative or reversal type film. Set the printer as follows:

Lamp at 90 volts.

Speed at 180 fpm.

All three trimmer knobs set at 12.

c. Filtering is accomplished as follows: Ultraviolet absorbing gelatins are placed in the filter slot at the douser. Eastman recommends a Wratten 2B for this purpose; Ansco, the 2B or UV16P.

The infra-red absorption is accomplished by the 4-mm thickness of Pittsburg No. 2043 heat absorbing glass in the lamphouse.

Neutral density filters may be inserted in any of the three remaining filter slots (red, green and/or blue) to meet the conditions (3) and (4) prescribed in paragraph 2-8, b. For Eastman color print film, it is recommended that no filter be used in the red filter holder, a 0.20 ND filter be used in the green holder, and a 0.60 ND filter be used in the blue holder. (This combination approximates the average requirement.) Reversal films generally will require no ND filter in red, a 0.10 ND filter in green and a 0.20 in blue. In addition, it is recommended that a neutral density filter be placed in the "integrated" filter holder at the douser. These filters will vary with each type of film utilized.

d. Prepare a program tape with light numbers 10-10-10, 20-20-20, 25-25-25, 30-30-30, 35-35-35, 45-45-45. Insert this tape in the reader.

e. Immobilize the lower film stabilizer (figure 4) with a rubber band so that the film break switch remains open. Remove relay "K2-L" from the reader so that the automatic first cue feature is eliminated. It is important that the first program be cued in by the notch or patch in order that the continuity of the light changes is not lost.

f. After printing, screen or view the print carefully to determine whether or not the balance is close and which light number setting has produced the nearly correct density. For those laboratories which are unfamiliar with additive color printing, refer to the data on Simplified Color Correction, paragraphs 3-12, 3-13 and 3-14.

2-9. MAINTAINING BALANCE AND ILLUMINATION LEVEL.

Various methods are used by laboratories throughout the world to determine that balance and illumination level are being maintained. In some cases, a print test will be made (paragraph 2-8) and the print read on a densitometer and viewed for color balance. Another method would involve the use of light reading equipment (densichron or microammeter), using the probe to take the light reading at the aperture with the predetermined data set into the printer. In the latter case, readings generally are made at various lights programmed into the vanes and of each separate color beam (red, green and blue filters may be used on the probe to block out the unwanted beams). Whichever method is used will serve to detect any change in balance and illumination level which may have occurred as a result of lamp age or other reasons.

SECTION III

Theory of Operation

3-1. GENERAL THEORY.

The Additive Color Printer is specifically designed for color film printing and features automatic operation by means of pre-perforated program tape of the type used in business machines. The original negative is carefully inspected and edited and the desired scene-to-scene light and fade information noted on the program card or cards. The negative then is notched or "patched" (the RF patch cue system) at the appropriate spots where light changes or fades are to be effected.

Using the program card as a guide, all light change and fade information is punched into the tape with the tape punch (See figure 10). Duplicate tapes can be made on the tape checker-duplicator (figure 11), thereby providing insurance against possible loss of, or damage to, the original tape. This tape then is inserted into the program tape reader (figure 9), and the printer is ready for automatic operation.

When the AUTO start button is pressed, the tape advances to the "start" hole, the printer starts, and the first program on the tape is read-out and placed in memory. A CUE signal must be provided to utilize or trigger this information into the vanes and/or the fader. All printers are equipped with the "automatic first cue" feature (functions when K2-L relay is installed) when shipped. The first program of light and/or fade information will be automatically triggered at the start of this feature. On printers which have had K2-L relay removed by customer choice, a cue notch or patch must be used to supply the preliminary cuing signal. When this "cue" signal is received, two operations take place simultaneously. (1) The information stored "in memory" is released to the light valve shutters and fader so that the light valve shutters move immediately to the proper position and the fader operates at the speed called for by the tape. (2) The cue signal triggers the next cycle on the tape and sends that information to the memory storage section.

As the last program on the tape is "read-out" by the reader, it leaves a blank tape in position to be read at the next cue. When this cue signal occurs and the program in memory is sent to the light valve shutters and fader, the blank tape situation causes a zero-close to be placed in memory. Upon receipt of the final cue signal (at the end of the last scene), the zero-close is relayed to the light valve shutters and the printer stops as the No. 8 hole is read out.

3-2. FILM TRANSPORT SYSTEM. (Figure 4)

The film transport system consists of a main control sprocket (40-tooth for 16-mm; 64-tooth for 35-mm and 70-mm; 52 tooth for 70-mm, Type I) and two smaller feed and take-up sprockets. The latter are two-sided (double-toothed) sprockets on 35-mm and 70-mm printers. The main sprocket transports the film on one edge only, the opposite edge of the film being supported by a free-rolling shoulder. The shoulder and sprocket root are of uniform height above the aperture (approximately 0.008-inch). On 16-mm printers, the relief is 0.008-inch above the picture aperture and 0.003-inch above the track.

NOTE: 70-mm printers are available at customer request in any of the following designs: commercial 65/70-mm, full 70-mm, Type I, Type II 70-mm films.

Film motion between the feed sprocket and the main sprocket is stabilized by the use of film tension rollers which are adjustable in tension. These rollers have been adjusted at the factory for optimum steadiness and resolution.

Further stabilization of film is gained by the use of rollers on spring-loaded levers which act on the film loop between the take-up sprocket and the negative and stock film take-ups. The tension of these stabilizers has been adjusted at the factory.

A neoprene roller gate, with shielded ball bearings and adjustable features, insures positive contact of the films at the aperture. An air jet directs a flat stream of air to the inside of the aperture to assist in maintaining film contact and to keep the aperture clean.

The main sprocket is driven by the drive motor and belts through a flexible stycast coupling. Refer to paragraph 3-3, following, for a more comprehensive description of the drive system. A flywheel is affixed to the main sprocket shaft to stabilize the speed. The smaller feed and take-up sprockets are geared to the main sprocket with steel gears having nylon intermediate gears. All shafts in the printer film transport system are supported in permanently lubricated, shielded ball bearings.

3-3. DRIVE SYSTEM.

The printer is equipped with a two-speed drive system consisting of a two-speed induction motor and a single-speed belt drive. The 115-volt, 60-cycle AC motor is permanently mounted to the belt drive gear case and this entire assembly is coupled to the film transport gear train through a stycast coupling. The desired speed is set by placing the speed selector switch (figure 13) in the 60 or 180 fpm position. Illuminated speed indicators on the instrument panel provide a visible indication of the speed at which the

selector switch is set. The belt drive utilizes flat belts. A gradual acceleration is thereby affording protection against film breakage on starting. Dynamic braking on stops is provided by introducing DC voltage to the drive motor for a short period of time at the instant the AC voltage is terminated. Power for this dynamic braking feature is supplied by the printer DC power source. A knurled knob on the motor shaft or on the take-up sprocket permits manual movement of the printer gear train. The footage counter actuator and speed indicator switch are contained within the belt drive assembly.

3-4. TAKE-UP SYSTEM.

Film take-up is accomplished by means of automatically variable torque take-up motors and special tight winds (figure 8). A rheostat automatically increases the voltage to each take-up motor as the film footage on the take-up reels increases. The angle of the tight-wind arm is set initially so that the guide roller contacts the film at, or slightly behind, the point of tangency (film to core). Refer to paragraph 5-11e.

A swinging arm with guide roller raises as the film footage increases. As the arm raises, its upper end acts as a movable contact for the rotary rheostat, thereby increasing the voltage to the take-up motor. The arm will lock in the fully raised position, opening the circuit to the take-up motor, and is released by pressing a release button on top of the arm.

The film take-ups have a film capacity of 2000 feet. Three-inch film cores are necessary for proper operation. The film cores are retained on the hubs by a spring-loaded lock and require only a slight pressure for removal. All film path components, including take-up hubs and guide rollers, are aligned at the factory prior to shipment of the printer. However, if this alignment should be distrubed at any time (due to repair or replacement procedures, for example), realignment can be accomplished as outlined in paragraph 5-11, step b. If readjustment of take-up torque should become necessary, refer to the proper torque adjustment procedure in paragraph 5-12.

In operation, low torque is in effect while AUTO button is being depressed and tape is advancing to "start" hole. Full torque is supplied immediately upon printer start.

3-5. FEED SYSTEM.

Printer feed flanges have a capacity of 2400 feet (3000 feet on 70-mm models). Adjustable friction brakes are provided to reduce unwinding of stock on stopping action. On 35/32 models, an auxiliary flange and a combination film guard is furnished, so that either the 16- or 35-mm film may be used.

3-6. CUING SYSTEMS.

Two cuing systems are available, either one of which causes emission of a signal pulse to the program tape reader. This signal pulse immediately energizes the light valve shutter solenoids and fader circuitry, causing them to respond to the light and fade information in the memory storage section. Simultaneously, this same pulse recycles the reader, thereby introducing the next series of light change and fade information into memory. The most common cue system is the notch type, wherein the roller of the cue-switch rides the edge of the film and is actuated by a notch cut in the film edge. The RF cue system utilizes either a single or double metallic patch and a proximity probe to generate a signal through a special amplifier, thereby eliminating the need for notching valuable original negatives. Both systems can be adjusted to obtain light changes and fader starts at precise locations with reference to the frame line. This adjustment will be accurate only with the reader-printer combination for which it has been initially adjusted. Any interchange of readers will necessitate a check to be made on film and a probable readjustment of cue-switch and probe positions.

A feature of the 35/32 printer is a device to facilitate the shift of the notch switch from the 35/32 position to the 16-mm position without the necessity of readjusting the cue switch roller to the notch. The device is designed for the use of the 16-mm notch size to be used on both films.

The cue is automatically delayed to accommodate frame line synching at both speeds of the 60 and 180 fpm system. As the speed selector switch is actuated, the delay is automatically changed. The cue switch must be adjusted for frame line synch at 180 fpm speed, and R211 in the reader is adjusted for synch at 60 fpm.

NOTE: The delay is accurate only with the reader-printer combination for which it was initially adjusted. Also see paragraph 4-6b, page 44.

The notch cue system (standard equipment on every printer) is a device that provides a signal to the electrical system of the printer each time a notch in the negative film passes the cue switch. (Item 4, Figure 1.) Adjustment instructions will be found in paragraph 5-7, page 61.

The R. F. Cuing System is a device that will reliably cause a cue signal to be presented to the printer control system each time a metallic patch applied to the film passes under the probe. As the metallic patch passes through the magnetic field set up by the sensing coil of the probe, a relay in the amplifier is caused to energize, thereby introducing a D. C. pulse to the printer cuing system.

DESIGN 6395D R. F. CUER (Transistorized)

The transistorized R. F. Cuer consists of an amplifier, probe (sensing head), roller, necessary mounting devices and electrical cabling to install the complete assembly on all C or MB Model Printers.

Modes of Operation: A selector switch having two positions, "R. F." and "NOTCH-R. F." is located on

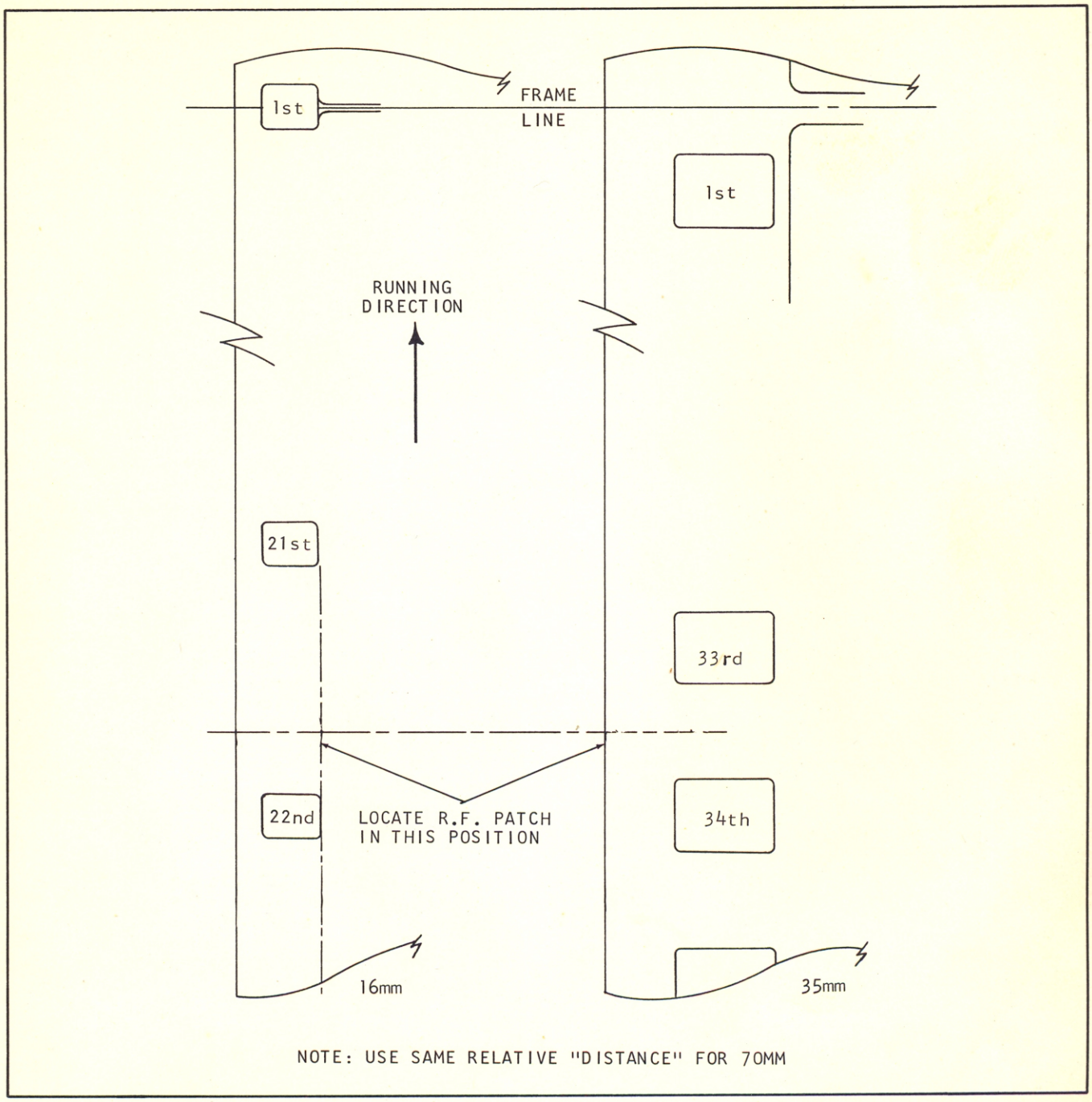

Figure 15A. R.F. Cuer Patch Location (Viewed from Base Side)

the control panel of the amplifier unit. This switch controls both the R.F. and notch cue circuits of the printer whether or not the film is threaded over the R.F. nylon roller. With the switch on "R.F." a cue signal to the printer can be produced only from a patch. With the switch on "NOTCH-R.F." the cue signal will be produced by both a patch and a notch if both are present on the film. Therefore, if the film has notches only, the switch must be set on "NOTCH-R.F.". If the film has patches only, it makes no difference which setting is used. If the film has notches and has been retimed with patches and it is not desired to have the notches actuate the cuing system, the "R.F." setting must be used. Any film having a patch that is to be used for cuing, must of course be threaded over the R.F. nylon roller. If film has both notches and patches and it is desired to have only the notches actuate the cuing system, the switch must be set on "NOTCH-R.F.", but the film will be threaded on the printer by-passing the R.F. nylon roller.

The Patch: The patch need only be 0.1-inch in diameter and 0.0015-inch in thickness and may pass under the probe with a spacing of up to 0.025-inch at a rate of up to 240 feet per minute. A single patch of this size is sufficient, but two may be used if desired.

Patch Application: (The patch applicator is not included with the R.F. Cuer.) The patches are generally applied to the film with an applicator that punches and presses the patch onto the film in a single operation. The material used is aluminum foil with a pressure sensitive adhesive backing, furnished in rolls. It is recommended that the patches be applied to the base side of the film as the resistance to movement from the applied position is then greater when the film is immersed in cleaning solvents, than when applied to the emulsion side.

Patch Location: The patch should be placed on the film as shown in Figure 15A. With the probe holder adapter and bracket positioned as outlined on page 12, there will be sufficient allowable radial movement of the probe holder bracket in either direction to compensate for minute changes that may be necessary for frame line light change synching.

Performance Characteristics and Voltage Requirements: The amplifier incorporates a transistorized circuit and will require no warm-up period. The cuer will operate reliably at any voltage between 105 and 130 and 50 to 400 cycles. 117 volts is desirable. The "steady-lit" or "on" condition for indefinite periods of time will not cause overheating or change in sensitivity. The electrical schematic, drawing 034314 is furnished with this manual.

3-7. OPTICAL SYSTEM (Figure 16).

The optical system consists of a single printing lamp, optical condensers, heat filters and dichroic mirrors. These components are contained in the lamphouse, vane housing and aperture housing, together with the fader, douser, and light valves.

The standard printing lamp supplied is a 1200 watt, 10-hour, 115 to 120 volt lamp (Bell & Howell part no. 307653) incorporating a proximity reflector. The lamp is mounted base down in a pin-type base which is adjustable in six directions. Instructions for adjusting the printing lamp and reflector will be found in paragraph 5-8. All adjustments are provided with positive locking devices.

Two primary condensers form the beam ahead of the lamp, and two heat filters are used to reduce the infra-red radiation to the system. These filters must be Pittsburg number 2043. A cover glass

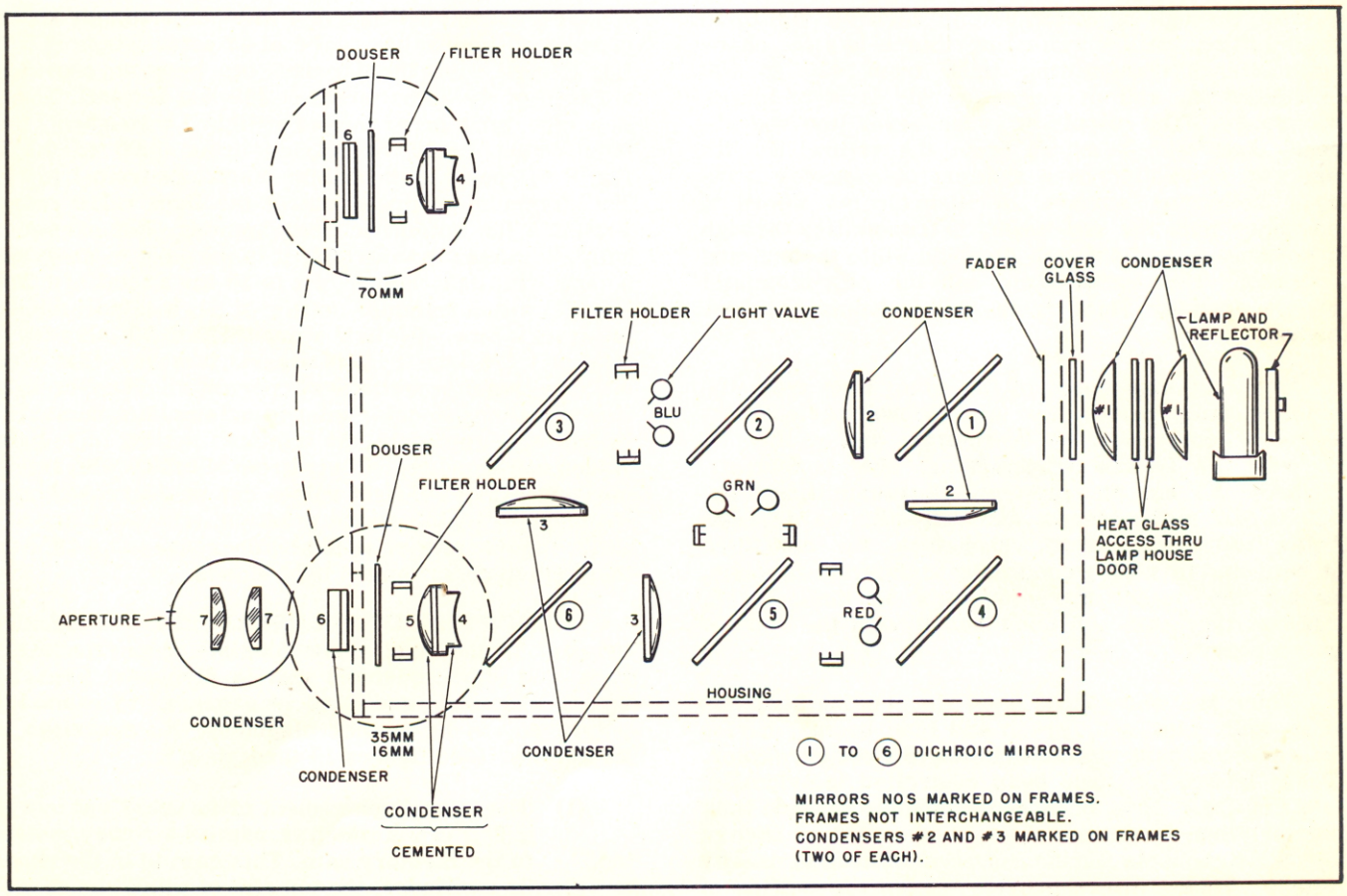

Figure 16. Printer Optical System Pictorial Layout

contains the air draft within the lamphouse.

Two fader shutters move into the light beam to effect dissolves and fades. (The operation of the fader is more fully discussed in paragraph 3-9.) The white light next is projected through a system of beam splitting dichroic mirrors to produce three beams of the primary colors (red, green and blue). Individual control of each of these beams is the automatic function of the printer.

The first dichroic mirror (dichroic #1, figure 16) transmits light from 420 to 570 millimicrons, with sharp cut off above 570 millimicrons, thus reflecting red. The red light is passed through a condenser, reflected off of the surface of another dichroic (dichroic #4) which has characteristics identical to dichroic #1.

The intensity of the red light is controlled by the position of a shutter which attenuates the maximum light available. The controlled red beam continues through dichroic #5 (red transmitting, cyan reflecting) where it combines with the green beam; then passes through another condenser and through dichroic #6 (red-green transmitting, blue reflecting) where it combines with the blue beam and continues on to the printing aperture. Referring back to dichroic #1, the red component of the white light from the printing lamp was reflected down to dichroic #4. Meanwhile, the green and blue components (cyan) passed through a condenser to dichroic #2 (blue transmitting, yellow reflecting) which has the characteristic of transmitting light from 420 to 480 millimicrons, and of reflecting all light of longer wavelength. The resultant green beam (the red already has been removed from the yellow) has its intensity controlled by a shutter; then passes to the cyan reflecting surface of dichroic #5 where it combines with the red beam, is transmitted through a condenser, and through dichroic #6 to the printing aperture. The #5 dichroic has the characteristic of transmitting light from 650 millimicrons and higher.

The blue component of the white light from the printing lamp passes through dichroic #2, has its intensity controlled by a shutter, and passes to dichroic #3 (yellow transmitting, blue reflecting). Dichroic #3 has the property of transmitting from 530 to 700 millimicrons, and reflecting wavelengths below 530 millimicrons. Therefore, the blue light is reflected through a condenser to dichroic #6 which, having the same characteristics as dichroic #3, reflects the beam and combines it with the red and green beams.

Thus, the white light from the printing lamp has been split into red, green and blue beams, having narrow band-pass characteristics to yield pure color. Their intensities have been controlled individually, and they then have been recombined to provide light for printing. A filter holder is provided in each of the color channels for the insertion of neutral density filters. These filters provide for coarse setting of each primary color value for color balancing purposes. The combined light passes through five condenser elements (four cylindrical and one spherical) whose purpose is to concentrate the light beam at the printing aperture to assure optimum illumination. A solenoid-actuated douser (paragraph 3-10) is provided to cut-off the light from the film when the printer is stopped. An additional filter holder is provided immediately behind the douser for filtering the integrated light.

3-8. LIGHT VALVES AND TRIMMERS.

The three light valves are identical and interchangeable. Each valve contains the memory selector, the shutter actuating mechanism and the shutters in one integral unit. The light values and trimmers provide for color correction in 72 individual steps of 0.025 Log E increments, for a total range of 1.80 Log E. Fifty of these values are automatically controlled by tape signals from the reader to the memory selectors; the balance are established by manually turning the trimmer knobs to shift the entire scale of automatically-controlled steps upward or downward. In this way, the same tape always may be used for the same original negative, and variations in color balance of print stock having various emulsion numbers may be compensated for by changing the trimmer setting.

With manual settings of 1 to 24, the trimmer knobs provide a light value range of 23 actual steps (0.575 Log E total), while the automatic tape program provides a range of 49 actual steps (1.225 Log E total). Thus, if a tape were programmed at light 1 throughout, the light value could be varied from 0.00 to 0.575 Log E by changing the trimmer settings from 1 to 24. The trimmer settings control the light value range available for automatic programming. For example: with a trimmer setting of 1, it is possible to program a tape with light values of 1 to 50 for a total of 1.225 Log E; with a trimmer setting of 24, it is possible to program a tape with light values of 24 to 73 (also for a total of 1.225 Log E). It is obvious, however, that each of these trimmer settings will permit a light correction (for variations in color balance and emulsion numbers) in one direction only. At trimmer setting of 1, light values can be increased only (from 51 to 73); with trimmer setting of 24, light values can be decreased only (from 23 to 1). In general practice, trimmers are set at 12, thus permitting an 11 step decrease and a 12 step increase in programmed light values.

a. MEMORY SELECTOR OPERATION. The memory selector of the light valve consists of an expandable rack and slide assembly that is displaced linearily as an assembly and also is expanded to cause the output end to be further displaced. Its operation is as follows: (See figures 17 through 21).

(1) The total displacement of the output end moves a bell crank which transmits a rotary motion to the memory cam. This cam is in the shape of a cylinder, the top rim of which is cut with

"V" shaped slopes. The memory cam position is transmitted to the shutters through the action of a bi-directional rotary solenoid encased by the cam. The armature of this shutter solenoid is geared directly to the shutters, positioning them on being energized.

(2) The linear displacement of the memory selector is converted to a logarithmic light change by an additional fixed cam in combination with the special characteristic of the shutter movement. On de-energization of the shutter solenoid, the memory cam is free to move into a new memory position while the shutters are snubbed in the former position.

(3) The output end of the memory selector rack assembly can be displaced linearly by two means. One method is the trimming knob, which moves the entire assembly the equivalent of 23 steps (manual setting). The second is the action of six rotary solenoids that move cam slides transversely across the rack. This causes the output end of the assembly to provide varied linear displacement to the input end of the bell crank for the equivalent of 49 steps (automatic operation).

(4) When all six of the cam slides are being utilized (rotary solenoids energized), the output end of the rack is moved toward the shutter to its extreme limit of expansion, thereby resulting in the lowest automatic light memory position of slide setting. When the trimming knob is turned to #1 (counter-clockwise), the entire rack is moved in the same direction, thereby resulting in the lowest light memory position of manual setting. This combination of automatic and manual positions will provide the lowest light values.

NOTE: All six slide solenoids are energized simultaneously only when a zero-close is programmed. The zero-close will be explained later. In automatic operation, a maximum of five slide solenoids are energized at one time and at least one is ALWAYS energized. For example: light "one," slides 2, 3, 4, 5 and 6 are used; for light "fifty," slide 1 is used.

(5) In like manner, if the trimming knob were set at #24 and only one of the cam slides were utilized (solenoid #1 energized), the rack assembly and the further displaced out-put end of the rack would be moved away from the shutter end of the mechanism to its opposite extreme limit. This will result in the highest light memory position (manual plus automatic setting), providing light value #73. As each of the rotary solenoids are energized and its cam slide is moved to a position that causes the cam to displace the output end of the rack, a spring loaded mechanical latch actuates, holding the slide in that position. Therefore, the solenoid is not required to hold its pulse longer than the time required to move the slide into position.

(6) The rack and cam slide assembly may be better visualized as an expandable unit. As each solenoid is energized, moving its cam slide into displacing position, all of the slides ahead of the one utilized are displaced a distance equivalent to the cam rise of that particular slide. As additional slides are utilized, this displacement adds up in the combined amounts of the cam rises. Therefore, each cam slide utilized displaces the output end of the rack assembly a distance equivalent to its cam rise.

(7) The six slides cause displacement of varying amounts. The #1 slide displaces an amount equivalent to one light step, the #2 slide equals two steps, the #3 slide equals four steps, the #4 slide equals eight steps, the #5 slide equals 16 steps, the #6 slide equals 20 steps. However, it should be noted that to obtain a memory situation of a certain number, the slides involved in totaling that number are left in the undisplaced position, their solenoids not being energized while all others are energized.

(8) This situation is effected electrically in the following manner: As a row in a program tape is being read out, the reading pins will pass through any holes present. Where there are no holes, the pins will be blocked. Those that pass through will cause a set of contacts immediately below each pin to "make." These contacts then feed B+ (150 volts DC) to coils of one or more of six associated relays (K2-RA, K2-RB, K2-RC, K2-RD, K2-RE and K2-RF). These relays energize, opening normally-closed contacts, thereby breaking a circuit between a cam switch on the reader shaft and the respective rotary solenoid in each light valve.

(9) Any reading pins that were blocked by the tape will therefore cause the opposite action and the circuit, from the cam switch to respective solenoids in the light valves will remain closed. As the cam switch mentioned above closes during the reader shaft rotation, B+ is fed to any of the light valve solenoids to which the circuit is closed, energizing them and causing those particular cam slides to be utilized. The slides of the solenoids not energized remain in the normal position.

b. ACTION ON A CUE. When a cue occurs, the following light valve action takes place:

(1) Relay "K2-V" in the reader is energized by the cue pulse. B+ is fed through its contacts to shutter solenoids in the three light valves, transmitting the present memory situation to the shutters. A few milliseconds there-

after (during which time the shutter solenoid has become de-energized), those light valve solenoids (#1 to 6) that are signaled by the reader are energized and, at the same instant, the unlatching solenoid is energized. The latter will cause any cam slides previously latched, but not presently signaled by the reader, to be unlatched and dropped back to the normal position.

(2) Any slides being held in position by their solenoids will again be latched, as the pulse to the unlatching solenoid will end sooner than that to the slide solenoids. Of course any slides not previously utilized but now placed in position by their solenoids being energized, also will latch. This eliminates considerable cam slide movement when any particular slides are called out for use in several sequential programs.

(3) As a zero-close is signaled to the light valve (by the absence of holes in channels 1 to 6 in the tape), a separate rotary solenoid on the light valve is energized. This solenoid moves the zero-close cam into position and sets up a memory cam position that will completely close the shutters on the next cue, regardless of trimmer settings, if the lowest light has been set in by the slide solenoids by the absence of holes in channels 1 to 6. The zero-close cam moves the bell crank, and thus the memory cam, approximately 30 steps lower in light value. Without the action of the zero-close cam, the shutters could remain open to the trimmer setting regardless of the no-hole condition of the tape.

c. LIGHT VALVE SHUTTER OPERATION. The two shutters on the light valve open and close in equal increments from both sides of the light beam. Each shutter is dampened against moving out of its set position due to vibration, by a spring-loaded disc of corprene pressed against a drum on the outer end of each shutter shaft. Due to the light weight of the shutters and the precise adjustment to which they are set, the shutters should never be moved manually.

d. STEP-BY-STEP VALVE OPERATION. The following discussion of light valve operation is keyed to figures 17 through 20, where the components are shown in sequential positions during the various stages. In the illustrations, (P) indicates fixed pivots; arrows on solenoids indicate the direction of actuator movement when energized; arrows on or adjacent to springs indicate direction of applied force.

(1) The six slides are shown in figure 17. Each slide (except #6) has two flat cam rises; #6 has only one. The cam rises are of such a height that the light step movement of the shutters varies as the slides are manipulated. Refer to paragraph 3-8, step a (7). The solenoids and latches are identical; therefore, for the sake of simplicity, only one solenoid and latch are shown in figure 17.

(2) In order to better understand the following discussion, it is first necessary to know the following: Looking at figure 17, the movements or positions will be described as right, left, up or down. Slide #1 rests firmly against two rollers on its left, which in turn rest against the butt plate (2).

(3) The butt plate is firmly positioned by the trimmer shaft (3) which is snugly threaded into the frame of the light valve. Briefly, the trimmer shaft prohibits any movement to the left, beyond the position to which it is manually set. However, if slide #1 is moved downward, the two rollers (6) will move the the slide to the right as the cam rises move under the rollers. As a result, slides #2, 3, 4, 5 and 6 and all the rollers separating them, will move to the right an equal distance. The #6 slide will therefore move the bell crank follower a respective distance. The resultant movement at the shutters will be one light step.

(4) Let us assume that slide #1 remained down and that slides #3 and #5 were caused to be moved down. In addition to the movement already caused by the #1 slide, slides #3, 4, 5 and 6 would move to the right the equivalent of 4 light steps. Then the #5 slide would further displace itself and the #6 slide to the right an amount equivalent to 16 light steps. The combination of the three would add up to a total of 21 light steps and the bell crank would have been moved a respective amount.

(5) Let us now assume that in additon to the #1, 3 and 5 slides being in the down position, the trimmer knob is turned through ten numbers, or detents, causing its shaft to move to the right an equivalent amount. The shaft and butt plate then will have caused the entire rack of six slides to move to the right and the resultant movement at the bell crank will be 21 plus 10 or 31 light steps.

(6) It now should be pointed out that (relative to light values rather than amounts in steps) with the slides in the "UP" position (cams not riding the rollers) and the trimmer shaft moved left to its limit, the highest light number will be produced. For example; with slide #1 only in the "DOWN" position, light number 50 is produced. Now, if the trimmer shaft is moved left to its limit, its dial will read #24 and the resultant combined light number actually will be 73 (although in practice this setting is generally referred to as "trim 24, light 50"). On the other hand, if all the slides except #1 were in the "DOWN" position and the trimmer was at #1 (shaft to the "right" limit), the resultant light number would be 1 and would be referred to as "trim 1, light 1."

(7) Before proceeding into the area past the bell

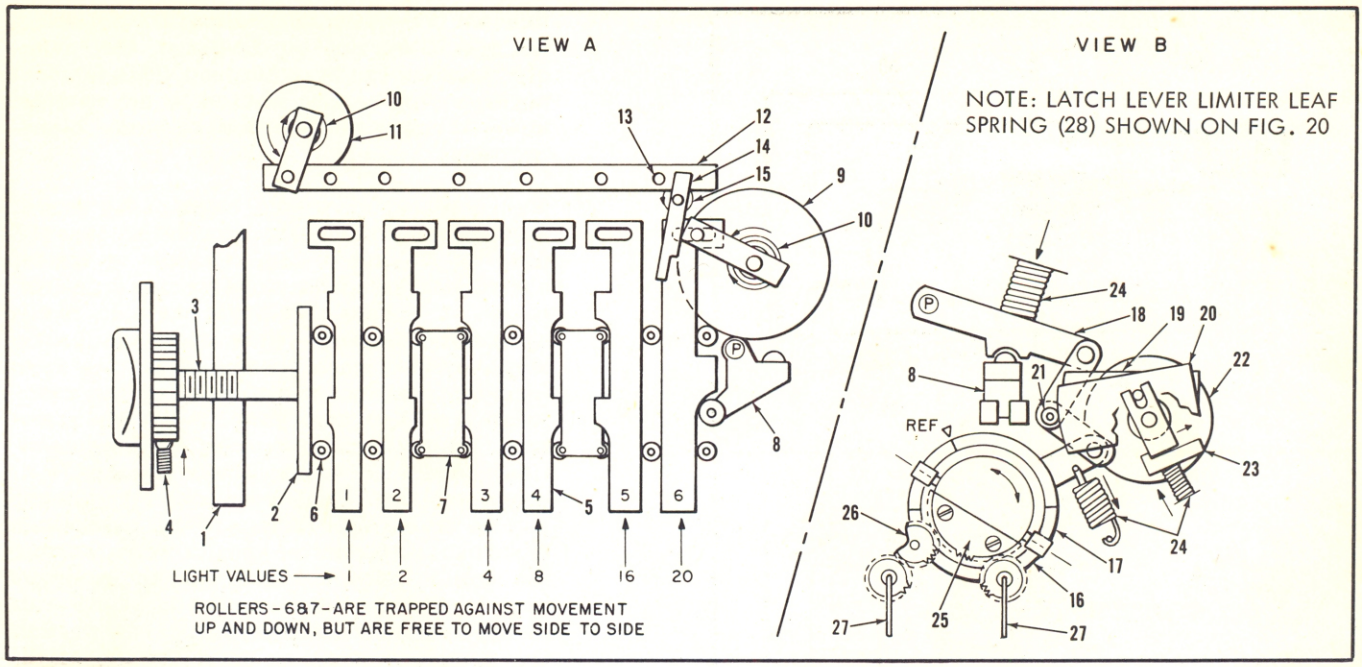

1. Frame
2. Butt plate
3. Trimmer shaft (threaded thru frame)
4. Detent
5. Slide cam (six used)
6. Rollers
7. Roller pads
8. Bell crank and follower
9. Slide solenoid (#6 shown)
10. Spiral return springs
11. Unlatch rotary solenoid
12. Unlatch bar
13. Unlatch bar stud
14. Slide cam latch lever, #6
15. Hairpin spring
16. Shutter rotary solenoid assembly (bi-directional)
17. Shutter solenoid cam
18. Leverage (bell crank to shutter cam)
19. Conversion cam (fixed position)
20. Zero-close cam (movable)
21. Cam follower
22. Zero-close rotary solenoid
23. Zero-close latch lever
24. Coil springs
25. Armature assembly
26. Intermediate gear
27. Shutter and gears assembly

Figure 17. Side and End Views of Memory Selector Slide Rack

crank, let us first consider the means by which the slides are chosen to be "up or down." Let us assume that the desired program (light number) will be 22. Button 22 on the tape punch will produce a tape that will have holes in channels 2, 3 and 5 (code 2 + 4 + 16 = 22). In the reader, the reading pins will pass thru the holes and cause circuits to be closed to respective relays in the reader. As explained later in the Reader Theory (paragraph 3-11), the circuits to slide solenoids #2, 3 and 5 will not be closed. Instead, circuits to solenoids #1, 4 and 6 will be closed and these latter solenoids will be energized by a pulse enduring from approximately 90° to 220° of one reader shaft rotation. Therefore, slides #1, 4 and 6 will be moved down and held until the 220° of rotation is reached.

(8) At about the same starting time, a pulse to the unlatch solenoid will be made. This action occurs now so that any slides that may be presently latched in the "DOWN" position, but that are not #1, 4 or 6, will be be unlatched and will snap to the "UP" position, utilizing the spring (10) on the solenoid. Since the unlatch pulse endures only to 130° of rotation, and as the slide solenoids are still energized, the latch lever returns to normal position, allowing each of the solenoids #1, 4 and 6 to be latched in the "DOWN" position. The pulse now may end to these solenoids. It is only necessary to associate holes in the tape with slide solenoids and slides as follows: Where there is a hole in the tape channel, that respective solenoid is not energized and its slide is not moved "DOWN." Where there is no hole in the tape channel, that respective solenoid is energized and its slide is moved "DOWN."

(9) The preceding paragraphs show how the bell crank follower is moved to the right as the slides moved down, or to the left as the slides moved up. Also note that as the slides are up, the highest light value is being programmed. Note that as the bell crank follower moved to the right, the pivoting movement of the bell crank caused the ball joint (at its right side) to move upward. In figure 17B, the end view of the entire assembly is illustrated and we see the bell crank at 90 degrees from its view in figure 17A. As the ball joint moves upward, it tends to move the

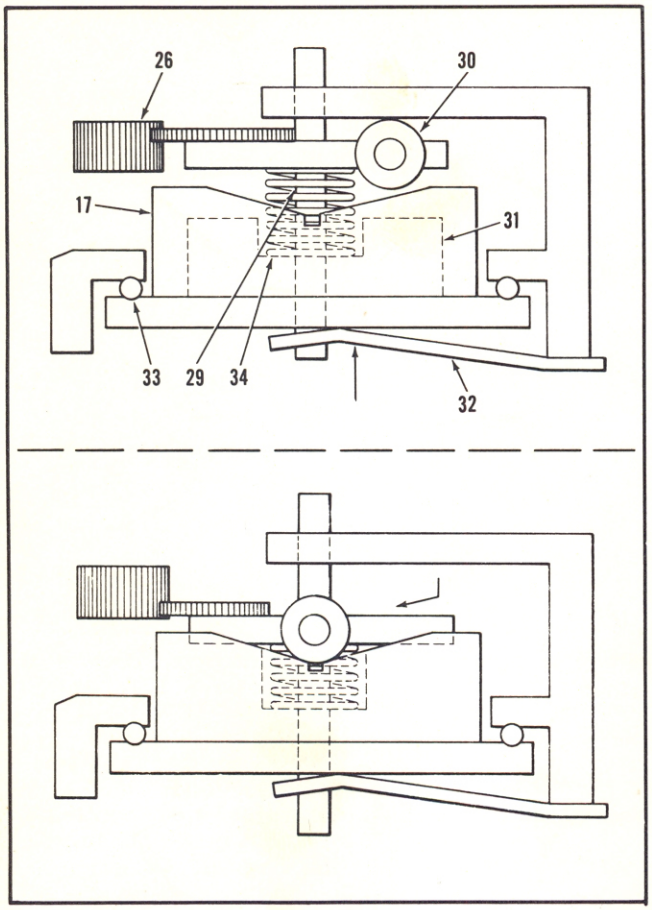

17. Shutter solenoid cam
26. Intermediate gear
29. Shutter solenoid armature
30. Shutter solenoid cam follower
31. Shutter solenoid coil
32. Spring
33. Ball bearings
34. Armature spring

Figure 18. Side Views of Shutter Solenoid De-energized (upper) and energized (lower)

upper arm of the leverage (18) with it. The upper arm is connected to the shutter solenoid cam (17) by two intermediate links that are joined by a roller bearing and shaft which also serves as a cam follower (21). As this follower is drawn upward against the fixed-position conversion cam (19), the resultant rotary motion of the shutter solenoid cam will amount to a log E result at the shutters, having been converted from the linear motion of the slides by the cam. Note that as the bell crank moves up, the radial motion of the shutter solenoid cam (17) is counter-clockwise.

(10) As can be observed in figure 18, the shutter solenoid cam may be rotated under the armature (29) if the armature is at the "up" position (coil (31) not energized). Therefore, as the coil is not energized at the time that the slide system is operating, the cam (17) may be moved without affecting the shutters. As the cam (17) is finally positioned by the slides, the bell crank and the leverage, the "memory" positon has been attained. This memory position will be transmitted to the shutters at the next cue and is explained in the following steps.

(11) Figure 18 portrays side views of the shutter solenoid assembly. The barrel-like cam (17) has two V-shaped cam surfaces at the top and rotates on ball bearings running in grooved races. A spring (32) holds the cam firmly against the bearings and dampens the shock of the armature when energized. In this view, memory position is displayed by the radial location of the bottom of the V-cut. The armature (29) has a roller bearing on two extremities and a gear sector firmly attached to its upper surface. The shaft moves thru the coil and is guided by bearings at top and bottom. A spring (34) forces the armature upward when the coil is not energized. The intermediate gear is of such a thickness that the gear sector of the armature is always in mesh, whether the armature is up or down. As the coil is energized, the armature will be pulled sharply downward.

(12) The lower view of figure 18 illustrates the shutter solenoid assembly at instant of cue pulse. Note that as the coil is energized and pulls armature downward, the latter is forced to turn (in the direction of arrow shown) by the roller bearings following the cam slope. The shutters, therefore, being geared to the armature, will turn to a position representative of the memory position that had been set up by the shutter solenoid cam. As the pulse to the coil ends, the armature is caused to move straight up by the spring (34), thereby leaving the shutters in the new position. The shutter solenoid cam now is free to be moved to a new memory position without affecting the armature or the shutters. Figure 19A illustrates the #6 slide solenoid energized and latched; note movement of bell crank (8).

(13) In figure 19B, the shutter solenoid cam (17) has moved to new memory position. Check reference mark (▷); note movement of leverage (18) and position of cam follower (21) on conversion cam (19). Armature (25) and shutter (27) have not moved. Figure 18 (upper) is an exaggerated example of shutter solenoid cam position at this stage.

(14) In figure 20, the unlatch solenoid is portrayed in action. The unlatch bar (12) has been moved by the energizing of the solenoid, causing stud (13) to unlatch the lever (14). As the slide solenoid (9) energy pulse is of longer duration than that of the unlatch solenoid, the slide is held in the downward position and is latched again as the lever (14) returns. It again appears as in view A of figure 19.

Key - Figures 19, 20, 21

5. Slide cam (6 used)
8. Bell crank and follower
9. Slide rotary solenoid
11. Unlatch rotary solenoid
12. Unlatch bar
13. Unlatch bar stud
14. Slide cam latch lever
17. Shutter solenoid cam
18. Leverage (bell crank to shutter cam)
19. Conversion cam (fixed position)
20. Zero-close cam (movable)
21. Cam follower
22. Zero-close rotary solenoid
23. Zero-close latch lever
25. Armature assembly
27. Shutters and gears assembly
28. Latch lever limiter spring

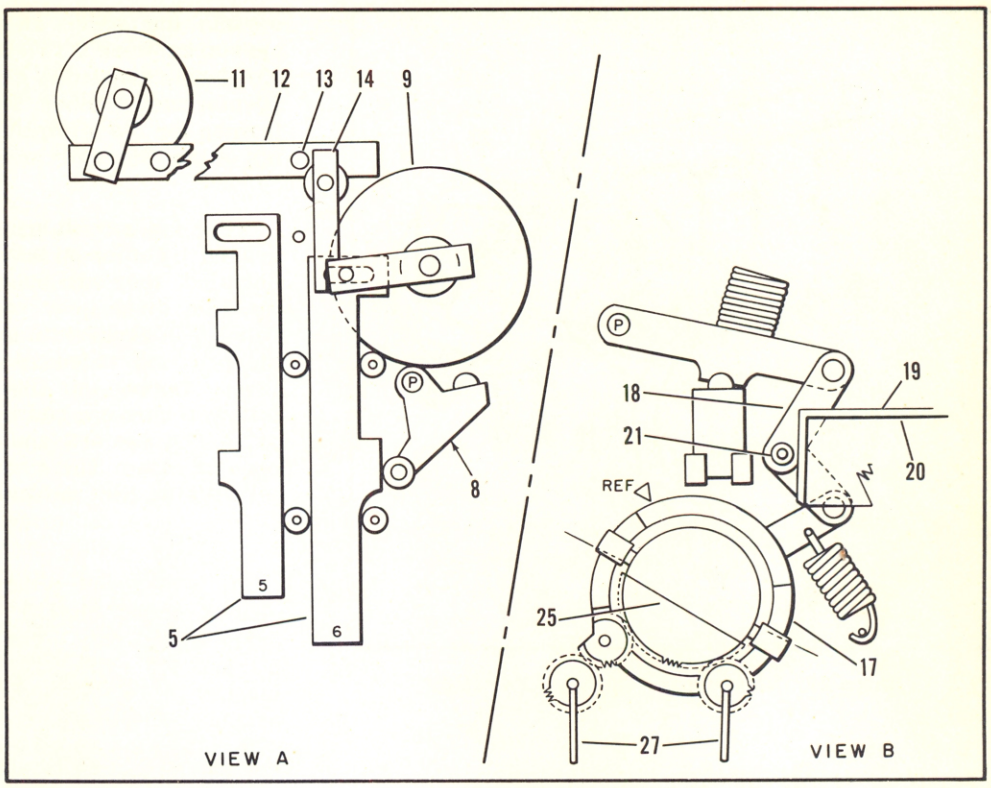

Figure 19. Action of No. 6 Solenoid and Shutter Solenoid Cam

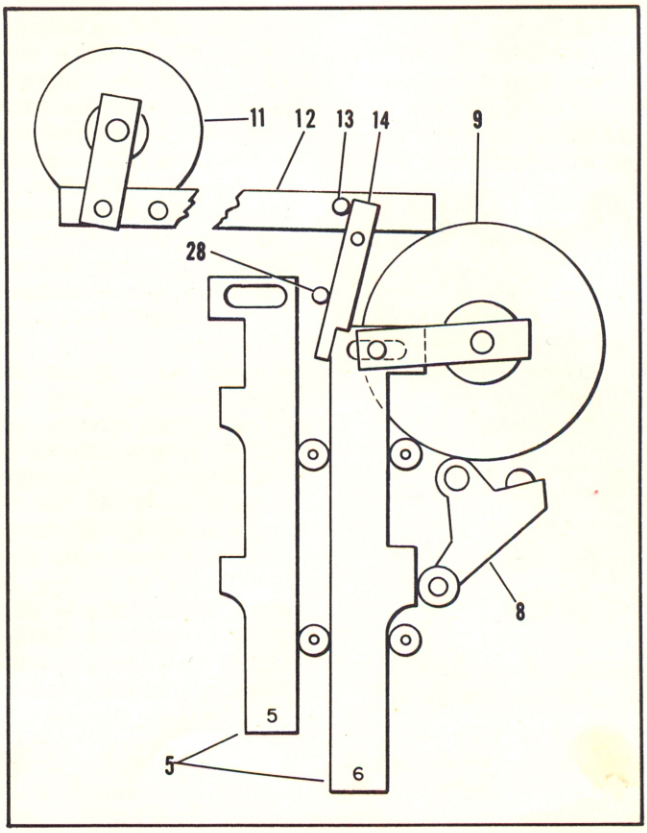

Figure 20. Unlatch Solenoid in Operation

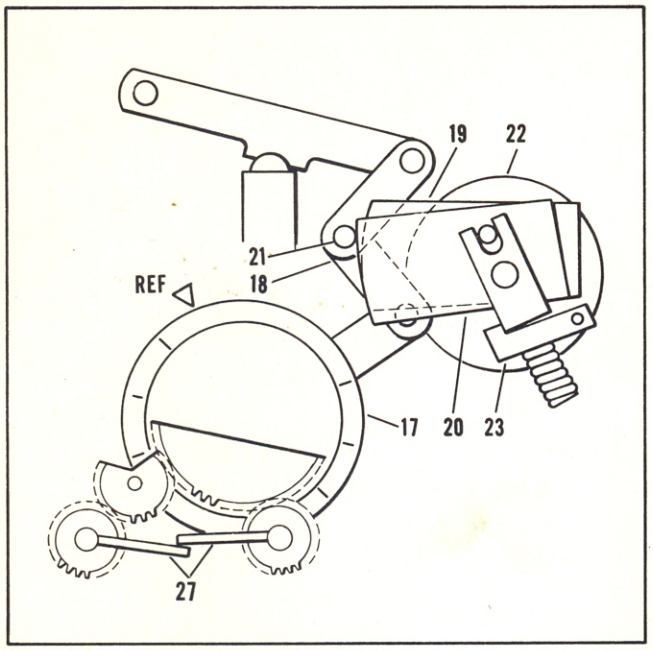

Figure 21. Zero-Close Cam in Operation

(15) In figure 21, the zero-close cam is portrayed in action. Solenoid (22) being energized and latched (23) causes the cam (20) to be moved toward the leverage resulting in the follower (21) being forced from its position even with the conversion cam (19). This causes the shutter solenoid cam to be moved an additional amount than that caused by the normal movement of the slide cam (5, Figure 19). Since all six slide cams are utilized in the zero-close programming, they have set up the lowest automatic light position possible. Therefore, the additional amount (toward a lower light setting) that the zero-close cam provides, will result in a shutter solenoid cam memory position that will allow the shutters to be completely closed (Figure 21), regardless of trimmer settings. Latch lever (23) is unlatched by the solenoid (11) that unlatches the slide cams; the pulse to the A.C. solenoid endures till 220° however.

3-9. FADER MECHANISM. (See Drawing No. 034498 in Section IX.)

Fader mechanisms for 16-mm, 35-mm, 35/32-mm and 70-mm are identical. On earlier printer models (on which 16-mm and 35/32-mm printing apertures were 0.157-inch in height), the 16-mm and 35/32-mm used one design cam and the 35-mm and 70-mm used another. Speed of operation, or length in frames for the different models is varied in the gearing of the "Fader Power Take-Off" case.

The fader contains five electro-magnetic clutches geared together in such a manner that when properly signaled, they will provide a relayed gear drive from the film drive gear case to the fade cam. The fade cam is integral with a half-revolution drum which is stopped and released by a solenoid actuated latch lever. During the 180-degree rotation of the cam, a follower moves a rod linearly. This rod, by a system of geared sectors and rods, causes two shutters to open or close. The movement of the shutters is parallel with the film movement.

It is necessary that two clutches (a ratio clutch plus a speed clutch) be energized to complete the drive to the cam. The two ratio clutches provide a 1:1 and 2:3 ratio. The three speed clutches provide lengths of 16, 32 and 64 frames at a 1:1 ratio clutch setting. Therefore, by combining either ratio clutch with any of the speed clutches, fade lengths of 16, 24, 32, 48, 64 and 96 frames may be produced. Since the fader is driven directly from the film transport gear case, any printer speed used will produce the correct chosen fade length.

The memory situation is set up by one to three relays K5-M, K5-N and K5-S which are signaled by #7 channel hole combinations (of Red, Green or Blue rows) and then locked in on B+ (150 V.D.C.) from relay K2-A contacts in reader, which endures until a cue occurs. These relays prepare circuits to the required read-out relays (K5-J, K5-Q and K5-T) and to the latch lever solenoid (L506). The read-out relays are energized on the next cue through the n.c. contacts of a relay (K5-K) which is in a normal de-energized position until such a time that the cue occurs, the solenoid being energized on the cue through memory relay contacts. This relay is energized very slightly later by the stack switch contacts closing, these being closed by the lifting of the latch lever out of one of two detents, 180-degrees opposed, in a drum on the cam shaft, as solenoid (L506) is energized. As relay K5-K energizes, its transferred contacts feed solid B+ to the read-out relay or relays that were energized by the cue, locking them in through their own contacts. The varistor across their coils hold them in during the switch from cue pulse to solid B+. Contacts of these relays (whether energized or not) set up the path for the correct clutches which are immediately energized by solid B+. At least one of the read-out relays must be energized

to allow B+ to reach any clutch. The latch lever having been lifted out of drum detent allows rotation of the integral drum and cam shaft by the energized clutches.

A unique, spring loaded split drum moves a segment under latch lever instantly, as it is lifted out of the detent. The possibility of the lever dropping back into the detent before clutches have commenced the rotation of the drum is thereby eliminated. The necessity for a closely timed delay on fall-out of the latch lever solenoid for the above reason is also eliminated.

The clutches, therefore, are now driving the fader cam shaft. As it is necessary to keep the clutches energized to complete the cycle, the stack switch is held in the transferred position by the latch lever riding the drum itself after the rotation has begun. At the completion of the half revolution, the drum is stopped by the lever dropping into the second detent.

The stack switch, therefore, reverts to normal position, de-energizing relay K5-K which opens the solid B+ circuit to K5-J, Q and T, causing them to de-energize. Contacts of either K5-J, Q or T relays, therefore, open the circuits to the clutches, causing de-energization. This completes the fade cycle.

If a fade is interrupted inadvertently during its cycle by a printer stop action, the cycle will be completed immediately when the printer is again started. This is due to solid B+ still holding the read-out relays locked in through K5-K contacts 9/5, as K5-K would not de-energize as long as the stack switch was still closed, the latch lever not being in either of the two detents. A cycle is complete when the latch lever has dropped into one of the two detents in the drum.

If an interruption of the cycle is caused by a power shutdown or by cutting off either the "power" or the "A. C." switch, the completion of the fade cycle must be accomplished manually. This must be done before any further printing is commenced. A spring-loaded knob has been incorporated to manually change the fader from one position to the other without the necessity of removing the back cover. A noticeable click will be heard as the mechanism drops into either detent. (See item 44, Figure 1.)

NOTE: If fader is being recovered from a position mid-way in the cycle, this knob may be pushed inward (to affect the connection with fader mechanism) and turned counterclockwise until a positive stop is reached. (Latch lever drops into the detent.) If fader is to be changed manually from open to closed, or vice versa (in which case latch lever is in the detent), the knob may only be turned clockwise. It is then difficult to prevent overriding the opposing detent, therefore after passing the detent, the knob is then turned counterclockwise until the positive stop is attained.

Illuminated indicators located on the instrument panel light to indicate that the fader is either open or closed. These indicators are switched in such a manner that neither can be illuminated unless the fader is either wide open or completely closed. If for any reason the fader has failed to rotate at all on a cue (with fade in memory), or had failed to complete its cycle, both indicators would be dark, thereby indicating trouble. The intensity of light in these indicators can be varied by adjustment of a sliding tap resistor located in the upper rear section of the vane housing.

A counter on the instrument panel registers at each fade cycle. Both the indicators and the counter are energized by separate micro-switches. These switches are actuated by a cam lever that moves as the fade shutter opens or closes. The indicator circuit also utilizes one contact in relay K5-K which is controlled by the latch lever, as explained previously. Therefore, the micro-switches set-up either the "open" or the "closed" circuit. However, the circuit cannot be completed unless the latch lever is in one of the two drum detents, causing relay K5-K to be de-energized.

It is impossible to design a fader cam which will produce good dissolves and which, at the same time, will produce good fades on reversal stock. However, the cam used in the color printer will produce excellent dissolves on any film, and good fades on negative-positive materials, either black and white or color. Fades on reversal materials, both black-and-white and color, will tend to be considerably shorter than the specified lengths because of the film sensitometry. We suggest a series of tests by the customer, after which he may wish to choose a longer printer fade length to provide a resultant fade of the desired length when printing reversal material. He may also wish to advance the notch or cue patch on fade-outs. Refer to paragraph 4-14i, for fade precautions.

In preparing negatives with fades involved, allow 4 frames, 16-mm, or the equivalent film length of other sizes at 180 fpm, following the length of fade selected before cuing another fade or program. See page 48.

3-10. DOUSER MECHANISM.

The douser is mounted on the frame of the #4-5 condenser assembly in the optical compartment with the douser blade mounted directly on the armature of a rotary solenoid. As the solenoid is energized, the douser opens. On de-energization, the spring return of the armature causes the blade to cut off the light directly ahead of the condenser assembly. The rotary solenoid is energized when any one of the three "starting" buttons (AUTO, TEST or alternate start-stop) is depressed, and the douser will close when the printer is stopped.

The solenoid is operated on a 150 VDC circuit, but is initially energized by a capacitor discharged at the "Start." This capacitor is charged while the solenoid circuit is open. When the circuit is closed, the capacitor discharges through the solenoid, thus energizing it with high voltage. Thereafter, the douser plus a resistor act as a voltage divider, and the solenoid is held energized with low voltage (approximately 40V). This effectively keeps the solenoid from

overheating, thereby increasing its life. The douser blade is equipped with a small mirror which directs a beam of green light to the aperture for synching.

3-11. PROGRAM TAPE READER.

The tape reader performs the function of reading the information from the program tape. The unit is of the intermittently operating pin-sensing type where operation is under the control of a camshaft which makes a single revolution to read each row of code. The reader advances four rows per each cue signal - one step for the blank space between information and three to read out red, green, and blue information sequentially. Operation of the camshaft is controlled by an electro-magnetically actuated, single-revolution clutch which connects the camshaft to a constantly-running drive pulley. This clutch magnet coil is energized for each group of four revolutions (one cycle), the magnet being de-energized during the fourth revolution. The clutch itself is a self-energizing device, clutching in as the electro-magnet removes the stop.

The reading pins are allowed (by a cam) to move, under light spring tension, into engagement with the tape while the tape is stationary. If there is a code hole in register with a pin, the pin moves through the tape to a position which allows an associated contact assembly to operate. If there is no code hole at this point, movement of the reading pin is blocked by the tape and the associated contact assembly remains inactive. Movement of the contact assemblies runs transversely to the direction of movement of the reading pins. Thus, a contact load sufficiently heavy for reliable operation can be controlled by relatively light tension on the reader pins. The tape is advanced one step during each turn of the reader operating shaft by a pin wheel which is indexed automatically just after the reading pins have been withdrawn from the tape.

The reader is provided with a tape contact (No Tape) switch so that the clutch cannot be actuated with the AUTO start button unless a program tape is in place. Also, the TEST start button will be inoperative when a program tape is used.

The tape reader is the heart of the automatic operation of the printer. By reading the perforated tape, it creates properly timed signals to select the intensity of the three color light beams, it selects the right fade length, and it starts and stops the printer. In addition, the reader contains the means to verify its own functions for proper sequence and to stop the printer immediately in case of a malfunction of some component which would cause the print to be unusable.

The printer and tape reader are prepared for operation as instructed in the section on operation. As the printer AUTO button is depressed and held, a closed circuit is maintained to the reader clutch coil. The reader now will advance the tape without interruption until the first row of the first program (blank row) which includes the start hole, is positioned over the reading pins. During this advance the take-up motors will have been operating on reduced voltage. It should be noted that, during each rotation of the reader shaft, even though the rotations are continuous, cam action causes the tape to stop while the reading pins actuate, searching for a program. The final action of each rotation is the single row advance of the tape. Therefore, in the last rotation of the "tape advance" action, the start hole is read-out, introducing a signal to a relay which locks in electrically. This relay cuts the circuit to the AUTO button, energizes a power relay in the control panel and causes a counting circuit to be commenced in a series of relays and cam switches in the reader. The counting circuit, meanwhile, has taken over the clutch coil circuit from the START button, allowing the reader to continue its rotation. Energizing of the power relay causes the drive motor to start, full voltage to be applied to the take-up motors, and the douser to open.

In the second rotation, any pins in the first six channels (light information) passing through holes in the tape will present signals to respective relays. The normally-closed contacts of these relays will open, thereby preventing a pulse from a cam switch circuit (which actuates once in each rotation) from reaching a respective solenoid in the red light valve and allowing the balance of the solenoids to be energized. For example, if pins 1 and 2 readout, the 1 and 2 pin contacts close and respective relays RA and RB energize, opening their contacts, and the cam switch circuit then energizes light valve solenoids 3, 4, 5 and 6. If the pin in the seventh channel (fade information) passes through a hole, it presents a signal to a fader relay.

In the third rotation, signals caused by the reading pins are channeled to the green light valve with the fade signal, if any, being presented to another relay in the fader. As the counting circuit continues to energize the clutch coil, the rotations continue.

In the fourth rotation, signals caused by the reading pins passing through holes in the fourth and last row of the program are channeled to the blue light valve and to a fader relay, if signaled. The channeling of information pulses to the three light valves and to three fader relays is accomplished by pairs of form "C" contact relays in series, each being energized on a different rotation of the reader. At the end of the third rotation, a counting relay K2-N is energized to open the circuit to the clutch coil. A diode delays the fall out of the clutch coil until the fourth revolution, at which time the reader will stop. An open circuit to the cam switches in the first rotation will prevent the no-hole program of the first row from affecting the light valves. The signals just discussed have created a memory situation in the three light valves and have set up a circuit through the proper combination of fader relays. The latter will cause the fader to operate at a certain speed and the light valve shutters to move to the position programmed for at the next cue signal.

One cycle now has been completed and the reader awaits a cue signal. At the cue, relay K2-V in the reader is energized. Its contacts close the circuits to all three shutter solenoids, thereby utilizing (or actuating) the program in memory. At the same time, contacts of relay K2-V close a circuit to relay K2-A which, in turn, causes the fader to operate at the selected speed (if a fade was in memory). Relay K2-A contacts also energize relay K2-B, contacts of which cause the clutch coil to energize, thereby actuating the counting circuit and commencing the next cycle of rotations. As cam switch S208 breaks the circuit to the shutter (vane) solenoids in the first rotation and as a first rotation counting relay positively opens the circuit to K2-V relay, also as first rotation counting relays hold the slide circuit open, the light shutter action is entirely accomplished before the light slide (or new memory) action can commence. The latter commencing in the second rotation, the read-out of the second rotation is channeled to the red light valve as in the preceding cycle and the balance of the cycle is identical to the previous cycle.

Note that the first rotation of the first cycle was actually the last rotation of the "tape advance" in which the reader clutch was energized by the AUTO button. The vane solenoids are not pulsed during this cycle. In succeeding cycles, the cue signal causes the vane solenoids to energize, the fader to be operated (if in memory), and the counting and read-out to be initiated as previous outlined.

As the last program on the tape is read-out, it leaves a blank tape in position to be read at the next cue. When this cue occurs and the previous program (now in memory) is actuated to the shutters, the no-hole tape situation causes a zero-close to be placed in memory.

At the cue signal occurring at the end of the last scene, the zero-close is actuated to the shutters and the printer stops as the #8 hole is read-out. This energizes the stopping relay and opens circuits to the drive and take-up motors and douser.

The circuitry in the reader is designed so that at the occasion of a relay failure which would upset the sequencing of the red, green and blue information, either the safety circuit will be tripped, stopping the printer and lighting the red indicator on the front of the reader, or the tape will suddenly advance continuously, reaching the end hole quickly, thus stopping the printer. In the latter case the red indicator will not light. If faulty relay happens to be relay K2-C, the printer will continue to operate but cue signals will be discontinued. The absence of the cuing sound should then warn the operator to stop the printer. (This one relay is the only one to cause this type of warning in case of its failure.) If some component failure causes the light shutter (or vane) solenoid to burn out (which would of course cause light change failures) then the safety circuit will be tripped at the next cue, stopping the printer and lighting the red indicator.

If the tape was erroneously ratcheted manually out of the correct position in relation to the reading pins, the safety circuit would also be tripped at the following cue, causing the printer to stop and lighting the red indicator.

After the cause has been detected and remedied, the reader will automatically be in correct sequence when restarted with Auto-Start, unless the red indicator is lighted, in which case it will be necessary to perform the following steps:

(1) Turn MOTOR switch off (to protect threaded film).
(2) Depress "reset" button twice.
(3) Rethread film back to starting position.
(4) Turn MOTOR switch on.
(5) Restart the printer at head end of tape with AUTO button.

See page 81 for Relay-Failure-Function Chart.

NOTE: On all printers, the manual CUE and FADE buttons are operable during automatic operation. Do not depress them accidentally.

Following is a condensed step-by-step outline of the automatic printer operation discussed in the preceding paragraphs.

a. On AUTO start, the tape advances to first program which is read-out and placed "in-memory" as the printer drive is started.

b. A cue is required to place any program into the shutters. An automatic first cue on AUTO start will actuate program #1 into the shutters. This is a selective feature and may be eliminated in favor of a notch in the first scene.

c. As the cue for utilizing program #1 is signaled, immediately afterward the read-out for program #2 occurs and is placed in memory. Each succeeding cue then causes similar action.

d. As the cue for the last program is signalled and this program is utilized, the reader advances the tape to present a "no-hole" situation, which places the zero-close in memory.

e. A cue now is required, past the end of the last scene, to cause the reader to advance the tape to the "end" hole, thereby stopping the printer. On this cue the zero-close program in memory is actuated into the shutters.

3-12. SIMPLIFIED COLOR CORRECTION — REVERSAL COLOR FILMS.

The following color correction data applies to Kodachrome, Eastman reversal color film, and Ektachrome reversal print material. Ansco films will respond in a like manner.

For purposes of clarification, lets us assume that the test print is in excess of magenta. Obviously, it must then be understood that too much dye of that color has been produced. This would necessarily have been caused by an insufficient amount of green light (to which the green emulsion layer is sensitive) reaching the film on the first exposure. The less an emulsion layer is affected by the first exposure of that colored light to which it is sensitive, the greater the amount of dye which is produced by the second exposure or chemical fogging. The correction, therefore, would be either (1) to add to the amount of green light, thus producing less magenta dye, OR (2) to decrease the amount of red and blue light reaching the cyan and yellow dye layers respectively, thus producing greater amounts of those dyes by the second exposure. The following sketch illustrates the emulsion layer make-up of Kodachrome and reversal color films. Circled numbers indicate the order and direction of dye coupling steps in processing after first developer.

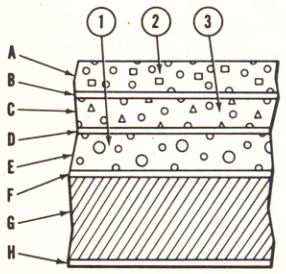

1 RED LIGHT RE-EXPOSED FOR CYAN DYE COUPLING
2 BLUE LIGHT RE-EXPOSED FOR YELLOW DYE COUPLING
3 CHEMICALLY FOGGED FOR MAGENTA DYE COUPLING

A - UNCOLORED YELLOW DYE COUPLER (BLUE LIGHT SENSITIVE)
B - YELLOW SILVER FILTER TO ABSORB UNWANTED BLUE
C - YELLOW-COLORED MAGENTA DYE COUPLER (GREEN & BLUE LIGHT SENSITIVE)
D - GEL (REDDISH-ORANGE COLORED
E - CYAN DYE COUPLER (RED & BLUE LIGHT SENSITIVE)
F - SUB
G - BASE
H - JET BACKING

In the above example, greater amounts of cyan and yellow dyes, of course, would produce the same color balance as that of lesser amounts of magenta dye. However, the correction procedure to be used would depend upon the density of the test print. If the test print was of a heavy density (underexposed), correction course (1) would be followed; if the test print was thin (overexposed), correction course (2) would be followed.

The following table indicates the corrections to be made in the printing light for the various excesses or deficiencies of color observed in a test (one light) print. The amounts of the corrections to be made are determined from experience and/or the use of sensitometry and are associated with the art of "color timing." Examples of additive point computations will be found at the end of this section.

CORRECTION TABLE - KODACHROME & COLOR REVERSAL FILMS

Test Print Has-	Test Print Under-exposed Overall	Test Print Over-exposed Overall
Too much blue	Add red & green (yellow)	Reduce blue
Not enough blue	Add blue	Reduce red & green (yellow)
Too much green	Add red & blue (magenta)	Reduce green
Not enough green	Add green	Reduce red & blue (magenta)
Too much red	Add blue & green (cyan)	Reduce red
Not enough red	Add red	Reduce blue & green (cyan)
Too much yellow	Add blue	Reduce red & green (yellow)
Not enough yellow	Add red & green (yellow)	Reduce blue
Too much magenta	Add green	Reduce red & blue (magenta)
Not enough magenta	Add red & blue (magenta)	Reduce green
Too much cyan	Add red	Reduce blue & green (cyan)
Not enough cyan	Add blue & green (cyan)	Reduce red

NOTE: Color light can be added by cutting down on neutral density or increasing light numbers; color light can be reduced by adding neutral density or decreasing light numbers.

3-13. SIMPLIFIED COLOR CORRECTION — NEGATIVE-TO-POSITIVE COLOR FILMS.

The following color correction data applies to positive-from negative type Eastman color print films.

For purposes of clarification, let us assume that the test print is in excess of magenta. Obviously, it must then be understood that too much dye of that color has been produced. This would necessarily have been caused by too great an amount of green light (to which the green emulsion layer is sensitive) reaching the film. The correction, therefore, would be either (1) to cut down the amount of green light OR (2) to increase the amount of red and blue (magenta) light. The following sketch illustrates the emulsion layer make-up of color print films.

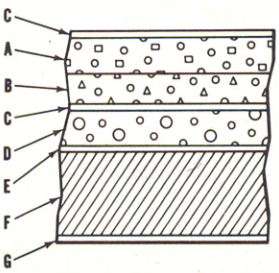

A - MAGENTA DYE PRODUCED - UNCOLORED COUPLER (GREEN LIGHT SENSITIVE)
B - CYAN DYE PRODUCED - UNCOLORED COUPLER (RED LIGHT (SENSITIVE)
C - GEL
D - YELLOW DYE PRODUCED - UNCOLORED COUPLER (BLUE LIGHT SENSITIVE)
E - SUB
F - BASE
G - JET BACKING

In the above example, it is noted that either course of correction will produce the desired result. However, the correction procedure to be used would depend upon the density of the test print. If the test print appears overexposed (heavy saturation of color or greater density of dyes), correction course (1) would be followed; if the test print appears underexposed (light in density of dyes or washed-out in appearance), correction course (2) would be followed. Note that the under- and over-exposed appearance of negative-to-positive color films is exactly opposite

that of reversal color films; therefore, the recommended correction procedures also are opposed.

If the test print used as an example is in excess of magenta (which also may be observed as a deficiency of the other two primary colors, cyan and yellow) and is underexposed, it would be desirable to increase the production of cyan and yellow dye. For the next print, then, the red and blue (magenta) light would be increased. From the illustration of color print emulsion layers, we can see that an increase of red and blue light will result in a heavier density of cyan and yellow dye. This not only will correct for the excess of magenta dye, but also will add density for the overall underexposed condition of the film.

The following table indicates the corrections to be made in the printing light for the various excesses or deficiencies of color observed in a test (one light) print. The amounts of the corrections to be made are determined from experience and/or the use of sensitometry and are associated with the art of "color timing." Examples of additive point computation will be found at the end of this section.

CORRECTION TABLE - EASTMAN COLOR PRINT FILMS

Test Print Has-	Test Print Under-exposed Overall	Test Print Over-exposed Overall
Too much blue	Add blue	Reduce red & green (yellow)
Not enough blue	Add red & green (yellow)	Reduce blue
Too much green	Add green	Reduce red & blue (magenta)
Not enough green	Add red & blue (magenta)	Reduce green
Too much red	Add red	Reduce blue & green (cyan)
Not enough red	Add blue & green (cyan)	Reduce red
Too much yellow	Add red & green (yellow)	Reduce blue
Not enough yellow	Add blue	Reduce red & green (yellow)
Too much magenta	Add red & blue (magenta)	Reduce green
Not enough magenta	Add green	Reduce red & blue (magenta)
Too much cyan	Add blue & green (cyan)	Reduce red
Not enough cyan	Add red	Reduce blue & green (cyan)

NOTE: Color light can be added by cutting down the neutral density or increasing light numbers; color light can be reduced by adding neutral density or decreasing light numbers.

3-14. EXAMPLES OF ADDITIVE POINT COMPUTATIONS.

The viewing or screening of a test print will indicate the necessary increase or reduction of color light and/or exposure level to produce the most satisfactory print. Adjustments generally are referred to in terms of "points." In the problems presented herein, the following key will explain each step indicated.

a - Light settings used to make test print with total of combined light settings shown in parentheses.

b - Number of points increase or decrease necessary to adjust exposure level with total shown in parentheses.

c - Adjusted light total (a plus b) with total shown in parentheses.

d - Number of points increase or decrease for proper color balance with total shown in parenthesis.

e - Total of c and d.

f - Compensation for balance change. The total points required for color balance (d) is divided by three. The result then is subtracted from each of the three beams if (d) was an increase, or added to each of the three beams if (d) was a decrease.

g - Total of steps (e) and (f) with combined total of all three beams shown in parenthesis. The combined total in (g) should be the same as the combined total in (c), and these will be the adjusted printing light settings.

If the reduction or increase of exposure level is accomplished by the addition or removal (respectively) of Neutral Density from the integrated filter position, There will be no "point" entry in step (b).

Problem No. 1: The timing calls for 6 points to be added to red and blue beams. Exposure to remain level.

Step	Red	Green	Blue	(Total)
a	25	25	25	(75)
b	0	0	0	
c	25	25	25	(75)
d	+6	0	+6	(12)
e	31	25	31	
f	-4	-4	-4	
g	27	21	27	(75)

Problem No. 2: The timing calls for 6 points to be added to the green beam. Exposure to remain level.

Step	Red	Green	Blue	(Total)
a	25	25	25	(75)
b	0	0	0	
c	25	25	25	(75)
d	0	+6	0	(6)
e	25	31	25	
f	-2	-2	-2	
g	23	29	23	(75)

Problem No. 3: The timing calls for 6 points to be added to the red and green beams. Exposure to be increased one full stop (12 points).

Step	Red	Green	Blue	(Total)
a	25	25	25	(75)
b	12	12	12	(36)
c	37	37	37	(111)
d	+6	+6	0	(12)
e	43	43	37	
f	-4	-4	-4	
g	39	39	33	(111)

Problem No. 4: The timing calls for 6 points to be added to the blue beam and 3 points to be added to the red beam. Exposure to be decreased one-half stop (6 points).

Step	Red	Green	Blue	(Total)
a	25	25	25	(75)
b	-6	-6	-6	(-18)
c	19	19	19	(57)
d	+3	0	+6	(9)
e	22	19	25	
f	-3	-3	-3	
g	19	16	22	(57)

Problem No. 5: Same as problem number 4. However, the decrease of one-half stop in exposure will be accomplished by inserting a .15 N.D. filter into the integrated holder instead of subtracting light at step (b).

Step	Red	Green	Blue	(Total)
a	25	25	25	(75)
b	0	0	0	
c	25	25	25	(75)
d	+3	0	+6	(9)
e	28	25	31	
f	-3	-3	-3	
g	25	22	28	(75)

SECTION IV
Operating Instructions

4-1. OPERATING CONTROLS.

All switches, knobs, dials and indicators for printer operation are discussed in the following paragraphs. (Refer to paragraph 4-3 for description of program tape punch keys used in perforating the program tape). The majority of the printer controls are located on the push button panel (figure 22), the instrument panel (figure 23), and the rear control panel (figure 5).

a. "AUTO" BUTTON (figure 22). Used to start the printer in the automatic mode of operation. This button is inoperative when no tape is present in the reader or when tape is present but the fader is closed. It also should be noted that the AUTO button will not start the printer if the roller gate is open. The AUTO button is held depressed until the first tape program reaches the reading pins of the reader; then may be released.

b. "TEST" BUTTON (figure 22). The TEST button is used to start the printer for checking purposes (see paragraph 2-7a for non-automatic operation test procedure). This button is used when no tape is present in the reader and, therefore, no light changes can be accomplished after a "test" start. The TEST button starting operation is not affected by an open roller gate, a closed fader, or the negative film break switch.

c. "STOP" BUTTON (figure 22). The STOP button is used to stop a printer that has been started with the TEST button or the alternate start-stop button on the tape reader (paragraphs, following). It also may be used to stop a printer in automatic operation, although this is normally accomplished by the "end" hole in the tape.

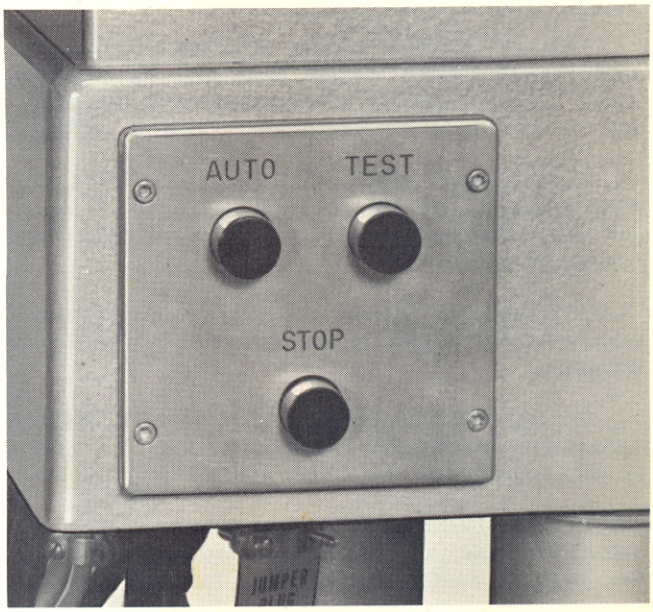

Figure 22. Printer Push Button Panel

d. "MOTOR" CIRCUIT BREAKER (figure 23). This control is used to switch AC voltage to the drive motor and the take-up motors.

1. Voltmeter dial
2. Fader indicators
3. Fade counter
4. Motor circuit breaker
5. Cue counter
6. Power circuit breaker
7. Printing lamp fuse
8. Lamp switch
9. Feet counter
10. Lamp fine rheostat
11. Hi-Lo switch
12. Counter reset knobs
13. Speed indicators
14. Voltmeter rheostat

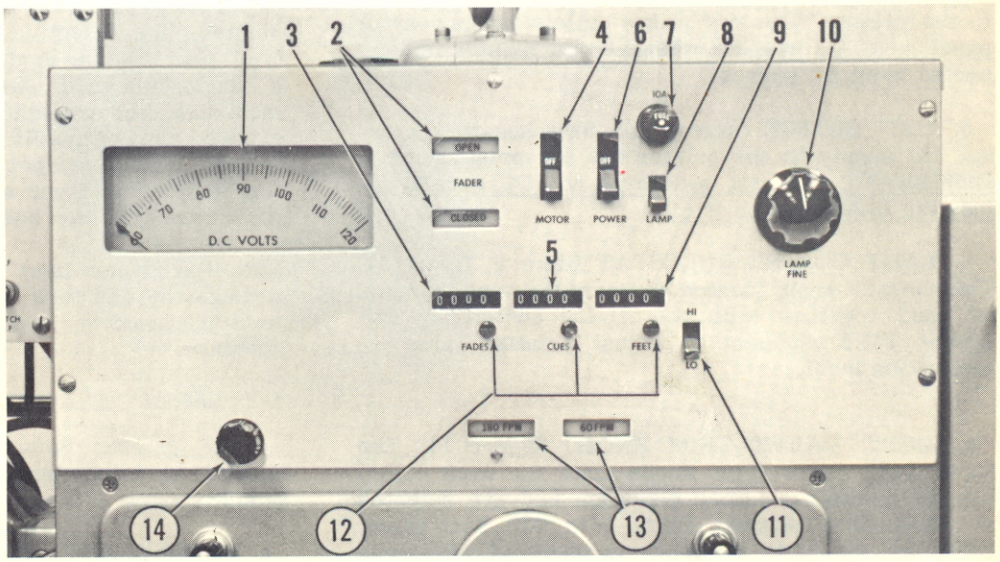

Figure 23. Printer Instrument Panel

e. "POWER" CIRCUIT BREAKER (figure 23). This control is used to switch AC voltage to the reader and to the DC power supply.

f. "LAMP" SWITCH (figure 23). Switches AC to the lamp and rheostat blowers and DC to the printing lamp. This switch MUST BE OFF when DC switch ("step o" below) is switched on.

g. "HI-LO" SWITCH (figure 23). The HI-LO switch shifts printing lamp voltage from high range to low range and is used in conjunction with the "fine" and "coarse" lamp rheostats.

h. "LAMP FINE" RHEOSTAT (figure 23). The LAMP FINE rheostat is used together with the HI-LO switch and lamp coarse rheostat to adjust printing lamp illumination level.

i. VOLTMETER RHEOSTAT (figure 23). This control is used to adjust the level of voltmeter dial illumination.

j. "FADER" INDICATORS (figure 23). The FADER indicators provide an immediate visual indication of the position of the fader (OPEN or CLOSED).

k. SPEED INDICATORS (figure 23). These indicators provide an immediate visual indication of the printer speed (60 or 180 feet per minute).

l. EDGE PRINTER "ON-OFF" SWITCH (figure 5). The edge printer switch controls the edge printer lamps. If this switch is in the ON position during automatic operation, the edge printer lamps will automatically turn on and off as the printer starts and stops.

m. EDGE PRINTER RHEOSTAT (figure 5). This rheostat controls the brilliance of edge printer lamps.

n. "AC SWITCH (figure 5). This is the master AC switch and when in ON position, switches all AC power to the printer. The two utility outlets on the control panel have AC present whenever the printer is connected to an AC source.

o. "DC" SWITCH (figure 5). Switches the external DC supply to the printer for the printing lamp. IMPORTANT. Do not switch on the DC switch unless the LAMP switch is off.

p. LAMP COARSE RHEOSTAT (item 9, figure 1). The rheostat knob, located on top of the vane housing, is used together with the HI-LO switch and the LAMP FINE rheostat to adjust printing lamp illumination level.

q. LIGHT VALVE TRIM KNOBS (figure 1). The three light valve trim knobs (one for each color) can be rotated in either direction and are detented at each light number from 1 to 24. Each value, from one detent to the next, is identical with steps on the program tape for manual color balancing.

r. OPERATING SPEED CHANGE CONTROLS. The switch used for changing the printer operating speed is located on the belt drive assembly. The controls are illustrated in figure 13 and explained in paragraph 3-3.

s. ALTERNATE START-STOP BUTTON (figure 9). The alternate start-stop button is located below the front right-hand corner of the reader and can be used to start and stop the printer with or without tape in use. Its principal function is to douse the "out-of-cycle" warning light when the occasion demands. This feature is more fully discussed in paragraph 4-13.

t. "MANUAL CUE" BUTTON (figure 9). This button, if depressed, will cause a "cue" to be signaled to the printer in the same manner as the cue notch or cue patch triggers the signal. The printer must be "on," the notch cue switch "open" (film threaded so that the cue actuating roller rides the edge of the film) before the MANUAL CUE button will operate. Since this button will operate while the printer is in automatic operation with film threaded, the operator must be careful not to press the button accidentally.

u. "MANUAL FADE" BUTTON (figure 9). This button, if depressed, will cause a 16-frame fade to be placed in memory. The MANUAL FADE button also will function during automatic operation, and precautions must be taken to avoid accidental triggering of the fade signal.

v. CUT-OFF SWITCH. The take-up motors have a cut-off switch which cuts the power to the motors when the tight-wind guide roller is raised to its upper position. The roller will latch in place and can be released by pressing a button on guide arm (figure 8).

w. PRINTING APERTURE SELECTOR (figure 4). The apertures on the 16-mm, 35-mm and 35/32-mm printers are selective and are of the rotating drum type. One 16-mm model and all 70-mm models have a single aperture. All apertures are 0.188 (3/16) inch high, and are exactly dimensioned to provide an exposed area on the film which meets A.S.A. specifications. Selective apertures are positioned by rotating a selector lever and detenting it in the proper hole. Spring tension holds lever in the detent position.

NOTE: A green light of low intensity is reflected through the aperture when the gate is opened. This light is used to facilitate synchronization at the aperture.

4-2. SAFETY FEATURES.

The printer incorporates the following safety features to insure accurate and trouble-free printing results.

a. SLOW START. The printer drive motor starts in a gradual acceleration, gaining full operating

speed of 60 fpm or 180 fpm, whichever has been selected by the operator. This gradual acceleration feature protects the film against accidental breakage which might otherwise be caused by sudden starts.

b. LOW-TORQUE TAKE-UP. The take-up motors are provided with a low-torque take up action during automatic starts. This feature remains in effect while the AUTO start button is being depressed.

c. NEGATIVE FILM-BREAK CUT-OFF. If the negative film should part during operation, the cut-off switch stops the printer and take-ups and closes the douser. The switch is actuated by the spring-loaded film motion stabilizer (figure 4) and has a short time-delay on opening the circuit so that short, quickly-recovered movements of the stabilizer will not cause the printer to stop.

d. OUT-OF-CYCLE WARNING. The tape reader contains a checking circuitry to detect any out-of-cycle condition that might signal a program to the wrong light valve. The warning system will detect an "error" if the tape is inadvertently moved (manually) or set at an erroneous position relative to the first row of holes in the tape and the read-out pins of the reader. Upon detection, the printer will stop automatically and the red indicator on the reader will light (see exception, paragraph 3-11) to signal that an "out-of-cycle" condition exists. After an out-of-cycle condition occurs, a special procedure must be used to restart the printer (paragraph 4-13).

NOTE: The three light valve shutter solenoids are connected in parallel so that, on receipt of the cue signal, the three light valve shutters will actuate simultaneously. This particular circuitry is protected by a 3/4-ampere slo-blo fuse (1/2 amp slo-blo on MB models) accessible on the outside of the reader near the cable connectors. If the slo-blo fuse should blow out, the results will be identical with that of the "out-of-cycle" warning: that is, the printer will stop and the red indicator on the reader will light. After fuse replacement, the restart procedure will be identical with that required to restart after an out-of-cyle condition (paragraph 4-13).

e. ROLLER GATE CUT-OFF. The opening of the roller gate actuates a switch that cuts off the power to the drive motor, the take-up motors, and the douser mechanism. This cut-off is effective only when the printer is operating on AUTO-start. (See item 17, figure 4.)

f. FADER POSITION CUT-OFF. When the fader is in the "closed" position (CLOSED indicator on instrument panel lit), a cut-off to the circuit of the AUTO button will be put into effect, and the printer will be prevented from starting on AUTO-start. This feature can be reversed on special order (that is, AUTO-start prevented when the fader is in the "open" position). In either case, the printer cannot be started until the position of the fader is reversed manually. TEST-start circuitry is not affected by this cut-off switch.

NOTE: Fader position cut-off feature can be eliminated, if desired, by removing relay "K2-X" from the tape reader and connecting a jumper wire between terminals 1 and 9 of the relay receptacle.

4-3. PREPARING THE PROGRAM TAPE WITH DESIGN 6170-D PROGRAM TAPE PUNCH.

The program tape punch (see figure 10) is used to punch the program tape for all Additive Color Printers, and black-and-white printers. The unit will program (1) fifty light values (49 steps) utilizing channels 1 to 6 (in row 2 for red, row 3 for green and row 4 for blue); (2) fade lengths of 16, 24, 32, 48, 64 and 96 frames, utilizing channel 7 in the various combinations of the red, green, and blue rows; (3) start and stop, utilizing channel 8; (4) a zero-close signaled by the absence of holes in any one of channels 1 through 6; (5) a zero-fade, same as zero-close, but with a hole in channel 7 of one or more rows. A blank row (the first row) is provided between each program of red, green and blue.

A facsimile of the key board is shown in figure 24. Note that a counter is provided to count the number of programs punched. The number in view on the counter indicates the program number to be punched. The red, green, and blue indicator lights provide an indication of which color program is to be punched. For example; if the red light is lit, the red program is to be punched.

The chads punched from the tape are conducted by a vertical chute through the bottom of the punch unit cover. A container for collecting these chads is not provided with the punch unit. Provisions should be made, in the table or bench on which the perforator is mounted, to prevent the punched chads from accumulating beneath the chute. The punches may jam and become damaged if the chute overfills with punched chads.

a. PREPARING THE PUNCH FOR OPERATION.

(1) Place both units on a level surface and connect the tape punch set to the 110-118 volt, 50-60 cycle AC power source. Interconnect the keyboard and punch with the connecting cable as shown figure 25. Flip the "on-off" switch (right-hand side of punch unit) to the "on" position.

(2) Prepare the punch unit for threading by flipping the sprocket guard away from the sprocket. This raises the "no tape" switch which also serves as a tape guide.

(3) Unroll approximately 18 inches of tape from the supply reel. Thread the tape over the roller and underneath the guide of the tight-tape switch. This switch may stop the punch if tape does not unreel freely.

(4) Thread the tape under the "no-tape" switch under the punch die casting, over the sprocket and under the sprocket guard. Note that the rear rail of the punch die casting serves as a guide for the inside edge of the tape. There-

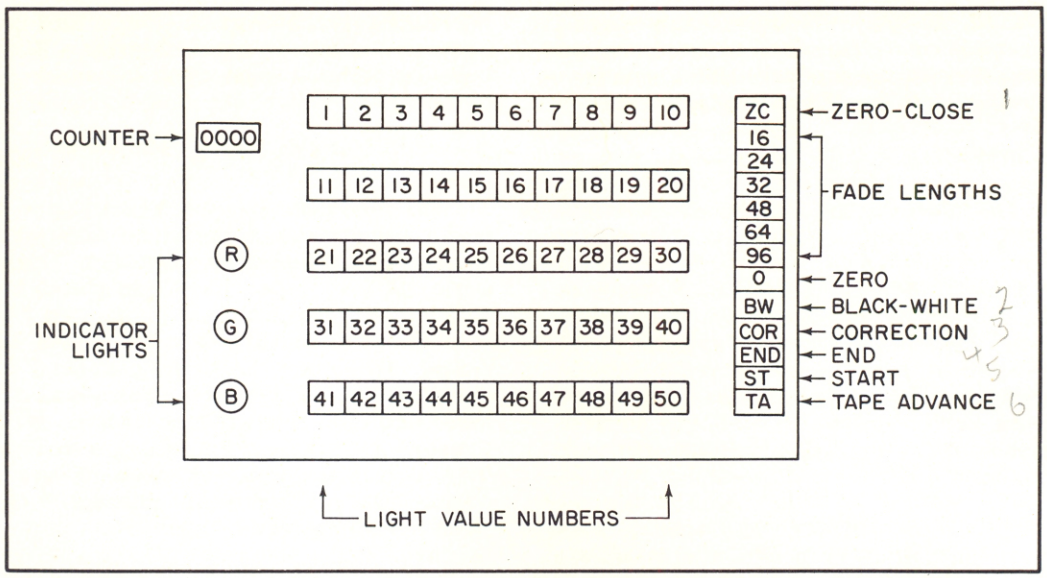

Figure 24. Facsimile of Tape Punch Keyboard

fore, the tape must be slipped into a slot at the bottom of the front rail. Close the sprocket guard.

(5) Depress the TA (Tape Advance) button on the keyboard until approximately eight inches of feed holes have been perforated. It is necessary to pull gently on the loose end of the tape while depressing the TA button until enough perforations have been punched to permit the sprocket to engage the perforations. When the TA button is depressed, the counter will automatically reset to zero and will cause the unit to be cycled to the correct starting position (red indicator lit).

CAUTION

It is advisable to inspect each program tape carefully after perforating. If an error is detected while operating the punch unit, discard the tape and perforate a new one. A tally count may be kept by the counter to be used against the original program card to assist in determining that the tape is being perforated properly.

b. PREPARING TAPE FOR COLOR (LIGHT INFORMATION ONLY).

(1) Depress the ST (Start) button. The counter now will read 1, the number 8 hole will be punched, and the tape will advance one row. The red indicator light will remain lit.

(2) Depress the proper button for the red information of the desired number. This information will be punched, the tape will advance one row, and the green indicator will light.

(3) After the green information button is depressed, the tape will advance one row and the blue indicator will light. After the blue information button is depressed, the tape will advance two rows and the red indicator will light. As the button is released, the counter will advance to the next number.

NOTE: At this point, the tape will have advanced one cycle (4 rows). It should have a number 8 hole only in the first row, the red information in the second row, the green information in the third row, and the blue information in the fourth row. The counter now will read "2" and the red indicator will be lit.

(4) Proceed to perforate the entire program and, when the last blue color information has been coded, press the END button. The END button will actuate only when the red indicator is lit, thereby assuring that the last program has been completed. It should be noted that the counter will register one cycle more than

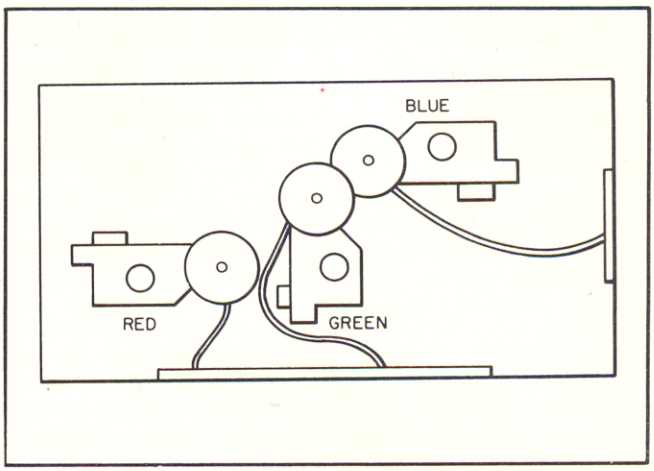

Figure 25. Tape Punch Connected for Operation

the actual number of cycles programmed as the circuit is designed to indicate the next program to be punched. Read the counter at this stage, as the TA button will reset the counter to zero as it is pressed to provide tape trailer.

(5) The actuation of the END button will have caused the tape to advance two additional cycles, punching the number 8 hole in the last row of the second cycle. The green and blue indicators will flash momentarily but none of the indicators will remain lit. The "end" button will not advance the counter. Depress the TA (Tape Advance) button until at least four inches of tape has advanced past the sprocket. This section will reset the counter to zero and cause the red indicator to light. Paper tape may be removed by tearing it off against the diagonal cutting edge of the sprocket guard with a twisting motion. Mylar tape must be cut with a scissors.

c. COMBINING LIGHT AND FADE INFORMATION.

(1) Fade information can be programmed only when the red indicator is lit. If a fade is desired at the start, depress the ST (Start) button; then depress the fade length button of the desired number of frames (as indicated on the fade buttons).

(2) Code the color information into the tape as outlined in preceding paragraph b; red information first, followed by green and then blue. The tape now will have advanced four rows.

NOTE: At this point, the tape will have a "start" hole in channel 8 of the first blank row, the fade code holes in channel 7 of the second to fourth rows (as required), and the light information for red, green and blue in the second, third and fourth rows respectively.

(3) A fade desired with an intermediate program is punched in the same manner, except that the ST button is not depressed.

ZERO-FADE INFORMATION: If a zero-fade is desired, the required fade length button is depressed first, followed by the ZC button (which is the actuator in this case). The tape will advance one cycle, will have the fade information punched in the 7th channel but the light information channels will be blank. An erroneous fade length may be erased with the COR button before ZC is pressed.

ZERO-CLOSE INFORMATION: Zero-Close is programmed by depressing the ZC button. This will advance the tape one cycle (4 rows) punching no holes in any of the eight channels. EXCEPTION: A Start hole may be punched with a Zero-Close by depressing ZC after the Start button. If ZC is depressed after a fade number has been pressed, a Zero-Fade will result. Pressing the ZC button after a fade number will then produce a tape which will cause a Zero-Close on the printer at the instant the fade commences.

BLACK AND WHITE INFORMATION: The Tape Punch will also prepare a program for printing black and white film on the Additive Color or black and white printers (the latter utilizes a 4-step tape with light information identical in the three rows). To prepare a tape for printing black and white film on either printer, depress the BW (black and white) button. The button will lock in the depressed position. The program must be started with the red indicator lit, as in color programming. The identical procedure will be followed as for color programming, including the use of fade signals, except that the light number chosen will be depressed only once. A 4-step cycle will be completed automatically, R, G and B numbers being identical.

The punch will perforate three rows of holes of the number depressed, including the fade holes, if signalled, and will also start the program with a blank row. The green and blue indicator lights will flash and the red will again remain lighted as the cycle ends. Pressing the ZC button will also cause the lights to operate in the same manner. To release the BW button simply depress it an additional time.

NOTE: Black and white programming is a convenient method of producing test tapes for use on the Color Printer when it is desired to have all channels of light uniform.

COR (CORRECTION) BUTTON: Will correct (erase from memory) a fade length which has been pressed if the COR button is pressed before the fade actuating button (red light information or ZC button). It will not erase any light information that has been pressed.

NOTE: The red indicator will light when the Tape Punch is switched "ON" whether or not it was lit when the unit was turned "OFF." This is also the case if a temporary power cut-off occurs.

If TA is pressed erroneously during a programming, regardless of the indicator lighted at the time, it will recycle the unit to red, reset the counter and require the ST to be depressed for a new start.

4-4. PROGRAM TAPE READ-OUT.

As outlined in paragraph 3-11, the reader provides the signals for starting and stopping the printer in the automatic mode of operation as well as for the light and fade information to be placed in memory and which will be utilized on the next cue. The following paragraphs outline the results of the various programs that may be read-out from the tape. The perforated tape code is illustrated in figure 26. The action for Start and Stop is immediate on being read-out.

a. LIGHT VALUE NUMBERS: Light values are indicated by holes in any one or more of the first six channels in rows 2, 3, and 4 (a minimum of one hole

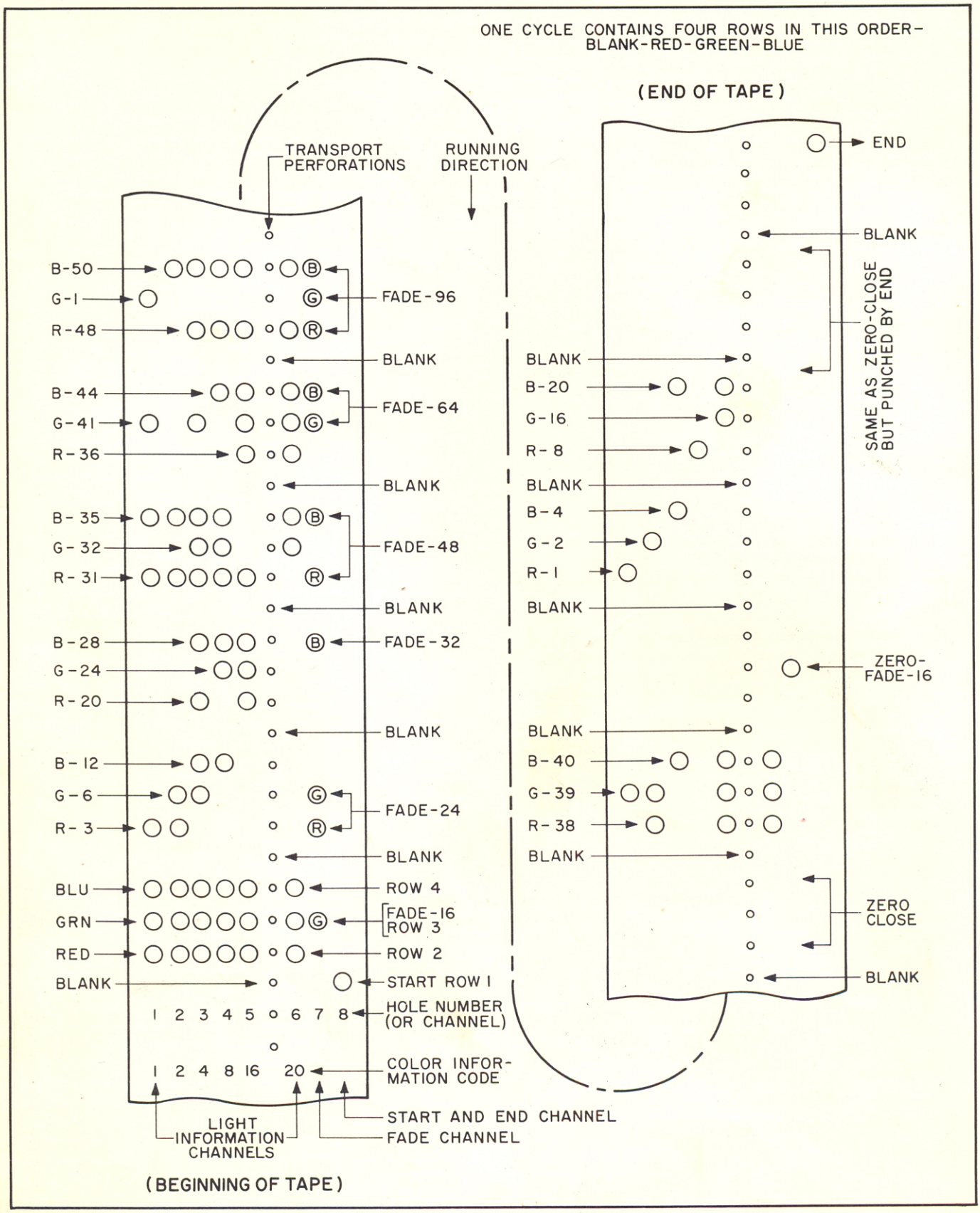

Figure 26. Example of Perforated Tape with Codes Identified

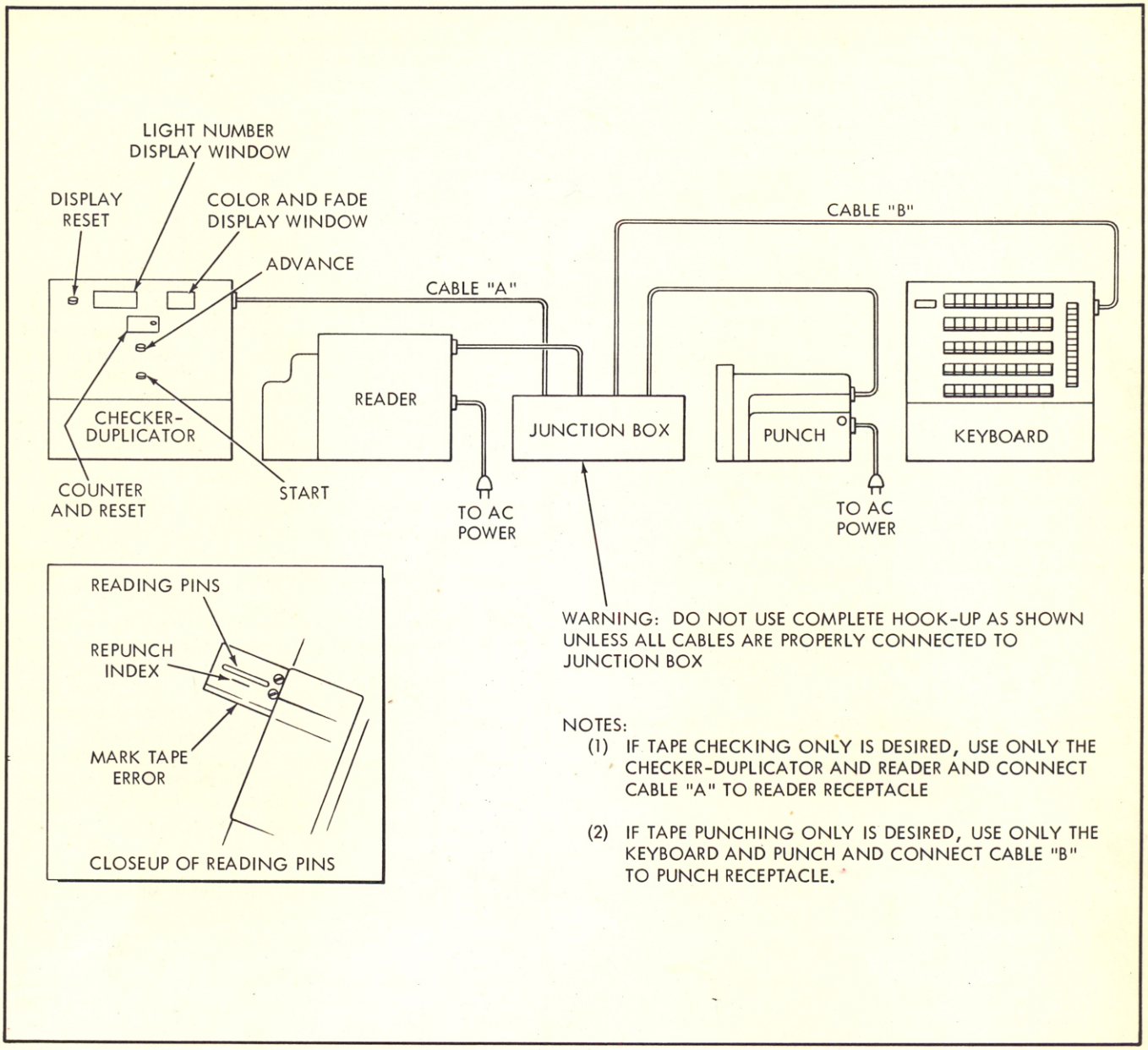

Figure 27. Complete Punching and Checker-Duplicator Hook-up

and a maximum of five). When read-out, this program will signal the red, green and blue light valve memory selectors from the reader pins in the second, third, and fourth rows respectively. This information is "stored" until the next cue signal causes the light valve shutters to be positioned to the respective light values for the three colors.

aa. FADE WITH LIGHT VALUE NUMBERS. Holes in any of the first six channels of all three rows 2, 3 and 4, plus holes in seventh channel in one or more of same three rows will be read-out as a fade of the length indicated by the holes punched plus the light values indicated. On the cue the light shutters will change (or be retained if program is identical with previous program) and the selected fade will commence.

b. ZERO-CLOSE (ZC): This condition is indicated by the absence of holes in the first seven channels of the first to fourth rows (the tape may or may not contain a #8 hole). The shutters of all three light valves will close completely, irregardless of the trimmer knob settings.

c. ZERO-FADE: This condition is indicated by the absence of holes in the first six channels of all three rows of color information, but with a hole in channel 7 of one or more rows and either with or without a #8 hole in the blank row. This will be read-out as a fade of the length indicated by the hole, or holes, punched, plus a complete closure of the light shutters, the closure occurring at the start of the fade.

d. END: This condition is indicated by the absence of holes in the first seven channels of all four rows and a #8 hole in the fourth row. This cycle is preceded by a blank four-row cycle which is spaced automatically on the tape when the END button is pressed. The blank four-row cycle allows the last program to be cued into the shutters and places a zero-close in memory. Thus, on the last cycle, a zero-close condition is actuated into the light valve shutters, and the #8 hole stops the printer.

4-5. USING THE TAPE CHECKER-DUPLICATOR.

The Design 6173-D Tape Checker-Duplicator consists of a checker, a reader, and a junction box (figure 11), with three identical 21-pin connector cables. The checker and reader, when interconnected (figure 27), provide a means for checking a perforated tape for errors. The reader unit reads the code from the tape and the checker displays the decoded information in display windows. When the checker and reader are interconnected through the junction box to the Design 6170-D Tape Punch, the equipment also can be used for duplicating tapes or inserting or correcting material.

a. SETTING UP THE CHECKER-DUPLICATOR.

(1) Place units adjacent to one another as shown in figure 27, depending upon the type of operation to be performed (checking only or duplicating and correcting).

(2) Interconnect the units with the cables supplied and with the 21-pin connector cable of the tape punch set. All connections on the junction box are labeled to insure proper connection.

(3) Connect the AC line cord supplied with the checker to a 110 to 118 volt 50-60 cycle AC power source. Connect the tape punch line cord to an AC power source.

NOTE: Legs are provided as accessories to elevate the rear of the reader if desired. The reader may be placed on top of the junction box for operator convenience. DO NOT ATTEMPT TO OPERATE WITH JUNCTION BOX UNLESS ALL FOUR CABLES ARE PROPERLY CONNECTED.

b. CHECKING A PROGRAM TAPE.

(1) Place the reader and tape punch "line" switches in the ON position.

(2) Insert the program tape to be checked into the reader. Make certain that the tape switch is properly positioned and that the "start" hole in the tape is behind the reading pins so that it will be read out as tape advances.

(3) Actuate the COUNTER RESET button on the tape checker to obtain an all-zero count. If any of the display lights are lit, actuate the DISPLAY RESET button to turn off all display lights. The start action will not occur unless all display lights are out.

(4) Press and hold the START button on the tape checker until the tape advances to the "start" hole. At this time, the tape will stop advancing and two zeros will appear in the light number display window, The start (#8) hole will not appear in the display window. The blank row, in which the #8 hole is punched, will have passed the reading pins and will stop at the "repunch index" mark (figure 27).

NOTE: Two digits always must be present in the light number display window of the tape checker when reading tape. This insures that the bulbs and circuitry are functioning properly.

(5) Press and release the ADVANCE button on the tape checker. The tape will advance one row, the red code row will be read-out and will stop at the repunch index mark. The tape checker will display the decoded red information in the light number display window and a solid red circle will appear in the color and fade display window. The counter will advance to #1 and will so remain until all three colors and the fade row of the first program are read-out.

NOTE: If the color information being read-out has a value of less than ten, a zero will always precede the single digit in the light number display window.

(6) When the ADVANCE button is pressed a second time, the green code row will advance past the reading pins and will stop at the repunch index mark. The decoded green information now is displayed in the light number display window and a solid green circle should appear in the color and fade window.

(7) The ADVANCE button is pressed a third time to read out the decoded blue information. Actuation of the button for the fourth time will complete the read out of the program being checked. If a fade has been contained in this program, the decoded numerical value of this fade will now appear in the color and fade display window, superimposed on a solid gray circle, and the light number display window will display two zeros.

NOTE: If the gray circle should appear alone (without superimposed numbers), this would indicate that there is a malfunction in the fade circuitry of the tape checker. Also note that the number of the program being

checked will appear on the counter as the red row of the program is read-out. In tape punch operation (para. 4-3), the program is counted as the first (blank) row is read-out.

(8) If no fade has been contained in this program, or if a Zero Close (ZC) program has been read-out, the light number display window will display two zeros and the color and fade display window will remain dark. If a Zero Fade is being checked, two zeros will appear in the light number display window and the fade number will appear in its window.

(9) The second program on the tape is read-out in the same manner as the first program except that a #2 will appear on the counter as the red information of the second program is read-out.

(10) Black-and-white (BW) programs are checked in the same manner as color. Each row is read-out individually and fades are displayed in the blank row following the light information as described above. The program counter will count as the first row of the program is read-out.

c. INDICATING ERRORS IN PROGRAM TAPE.

(1) When a light value or fade length error has been detected, continue to check the remainder of the program until the blank row has been read-out and has stopped at the repunch index line.

(2) Draw a pencil line across the tape along the edge of the plastic index device labeled "MARK TAPE ERROR." Also mark your program timing data sheet to indicate that a correction must be made at that point in the program.

(3) Continue to check the remainder of the tape, noting any further errors in the same manner as above.

NOTE: If, after noting an error, all following scenes or programs appear to be in error, it is quite possible that a complete scene or program may have been omitted just prior to the first program found to be in error. Obviously, none of the following scenes would match your program timing data sheet.

d. DUPLICATING A PROGRAM TAPE.

(1) Insert program tape to be duplicated into the reader as instructed in paragraph 4-5b (2), and place the tape punch and reader line switches in the ON position.

(2) Insert an unperforated tape into the tape punch as instructed in paragraph 4-3, and press the tape advance (TA) button on the keyboard to obtain the desired length of leader on this tape before starting the duplicating process.

(3) Actuate and hold the DUPLICATE switch on the junction box in the CONTINUOUS position. This will cause the tapes in the reader and the tape punch to advance simultaneously at a rapid rate. The tape punch will perforate its tape with a code identical to that on the tape in the reader. The reader will stop automatically when the end of its tape passes the tape switch.

(4) Continue to hold the DUPLICATE switch in the CONTINUOUS position to obtain the desired length of tail leader. Then release the switch and remove duplicate tape.

e. PREPARING A CORRECTED PROGRAM TAPE.

(1) If programming errors were discovered when checking the original program tape (para. 4-5c), reinsert the tape into the reader as instructed in paragraph 4-5b(2) and place the tape punch and reader line switches in the ON position.

(2) Insert an unperforated tape into the tape punch as instructed in paragraph 4-3, and press the tape advance (TA) button on the keyboard to obtain the desired length of leader on the tape.

(3) Hold the DUPLICATE switch on the junction-box in the CONTINUOUS position until an error mark (para. 4-5c) on the original tape approaches the reader pins; then release the DUPLICATE switch to halt the tape advance.

(4) Hold the DUPLICATE switch in the STEP position. This will advance both tapes one row at a time with a delay between each advance. When the error mark on the original tape reaches the repunch index of the reader, release the DUPLICATE switch.

(5) Press the REPUNCH switch on the junction box to the CORRECT position and hold it there while punching the correct data on the keyboard of the tape punch. This will punch the correct data for the program into the duplicate tape. Meanwhile the tape in the reader will advance past the incorrect data and will be in position to continue the automatic reproduction.

(6) When the correction has been made, release the REPUNCH switch and actuate the DUPLICATE switch to the CONTINUOUS position to continue automatic duplicating until the next error approaches. Repeat steps (4) and (5) above until all corrections have been made.

f. INSERTING AN OMITTED PROGRAM.

(1) Insert original program tape and unperforated tape into the reader and tape punch as out-

lined in paragraph 4-5e, steps (1) and (2) and advance the tapes to the error mark in the same manner as steps (3) and (4). In this case, the error mark will be in the blank row of the program which is to be preceded by the insert material.

(2) Press the REPUNCH switch on the junction box to the INSERT position and hold it there while punching the insert data on the keyboard of the tape punch. Note that the tape in the punch now includes the inserted program but that the tape in the reader did not advance beyond the error mark.

(3) Release the REPUNCH switch and continue to duplicate and/or correct the tape as outlined in paragraphs d and e, preceding.

4-6. RF CUER ADJUSTMENT.

a. FRAME LINE SYNCHING. The frame line cue synch adjustment should be made at 180 fpm. This adjustment must be made to insure light changes and fader starts at precise locations with reference to the frame line on the film. To make the adjustment, proceed as follows:

(1) Prepare a tape and make a film test of a light change. Inspect the test film. If the light change appears between the desired frame line and the patch, then the light change was too late and the probe must be moved away from the printer aperture. If the distance from the patch to actual change point is greater than the distance from the patch to the desired frame line, then the light change was too early and the probe must be moved toward the printing aperture.

(2) To make the adjustment (figure 14, sheet 2), loosen locking screw (2) just enough to permit the probe holder bracket to be rotated. Be sure to hold the bracket firmly against the adapter while making the adjustment (to maintain centering of probe and patch). Then tighten the lock screw (2) securely. Repeat adjustment until synching is accurate.

NOTE: The frame line synch adjustment will be accurate only with the reader-printer combination originally adjusted. Any interchange of readers will necessitate a recheck of frame line synch and probable readjustment.

b. AUTOMATIC CUE DELAY. For operation at 60 fpm, a delay circuit for the cue pulse is incorporated in the printer reader. This delay is introduced automatically by changing the operating speed from 180 to 60 fpm. This delay is effective with the notch cue system or transistorized RF Cuer (Design 6395-D) and will be accurate only with the reader-printer combination for which it has been initially adjusted. Any interchange of readers will necessitate a recheck of cue delay and probable readjustment. A film test at both speeds is used to check the delay, after first ascertaining that frame line synch is correct at 180 fpm. The delay circuit utilizes a fixed resistor R208 in series with a potentiometer R211 (see schematic 034005 in "Drawings" section). The potentiometer is turned clockwise to increase the resistance (lengthen the delay).

c. SENSITIVITY ADJUSTMENT – DES. 6395-D (TRANSISTORIZED) RF CUER.

(1) Prepare a four-foot film loop with one cue patch applied to the base side of the film. Patch must be accurately placed with reference to probe center lines. Thread the loop of film on the printer.

(2) With a long program tape in the reader and printer speed set at 180 fpm, place the RF amplifier switch in RF position and start printer with AUTO start button.

(3) Turn amplifier SENS. ADJUST control fully clockwise. Remove the plug button from the access hole located to the left of the cue pulse indicator light. The TRIMMER RESISTOR adjustment screw is accessible through this hole.

(4) Unscrew the indicator light jewel so that pulsing light can be more readily observed. With a small plastic screw driver, turn the TRIMMER RESISTOR in either direction until pulsing occurs as the patch moves under the probe.

(5) Turn the TRIMMER RESISTOR slowly clockwise until the exact setting is reached where the pulsing stops and the indicator glows steadily. Reinstall the plug button.

(6) Adjust the SENS. ADJUST control very slightly in a counterclockwise direction until the indicator once more begins to pulse. Place or scribe a mark to indicate the exact point where the "steady-lit" mode changes to pulsing mode. Continue rotating slowly counterclockwise until the pulsing stops and the indicator is no longer lit. Mark this position also.

(7) Make final sensitivity adjustment by positioning SENS. ADJUST control slightly under midway between marks made in step (6) and toward steady lit mark. Tighten control lock nut securely, but do not move the nut located behind lock nut in either direction.

NOTE: Any repositioning of the probe, other than the frame line synch adjustment (step a, preceding) will necessitate a recheck of sensitivity settings.

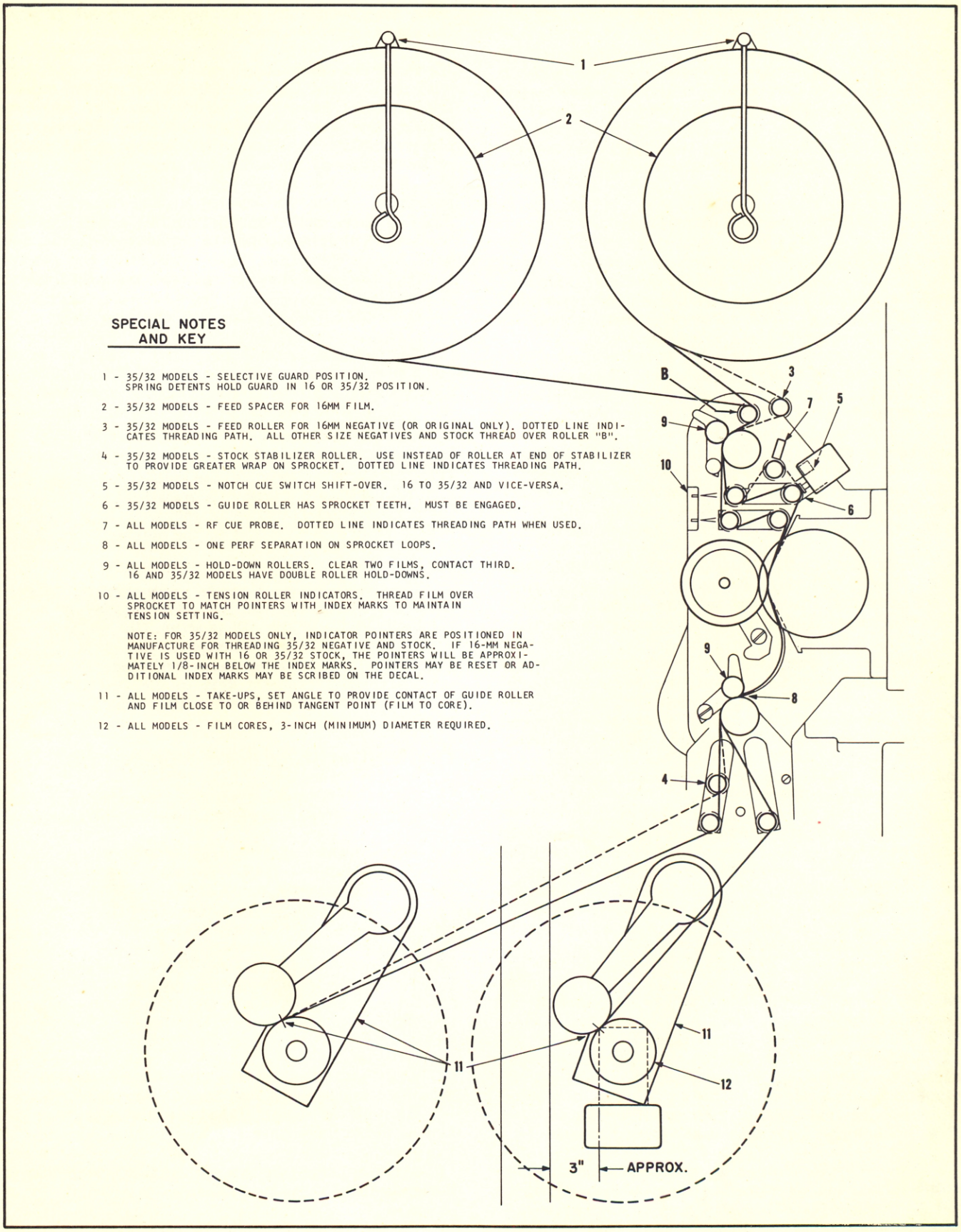

SPECIAL NOTES AND KEY

1 - 35/32 MODELS - SELECTIVE GUARD POSITION. SPRING DETENTS HOLD GUARD IN 16 OR 35/32 POSITION.

2 - 35/32 MODELS - FEED SPACER FOR 16MM FILM.

3 - 35/32 MODELS - FEED ROLLER FOR 16MM NEGATIVE (OR ORIGINAL ONLY). DOTTED LINE INDICATES THREADING PATH. ALL OTHER SIZE NEGATIVES AND STOCK THREAD OVER ROLLER "B".

4 - 35/32 MODELS - STOCK STABILIZER ROLLER. USE INSTEAD OF ROLLER AT END OF STABILIZER TO PROVIDE GREATER WRAP ON SPROCKET. DOTTED LINE INDICATES THREADING PATH.

5 - 35/32 MODELS - NOTCH CUE SWITCH SHIFT-OVER. 16 TO 35/32 AND VICE-VERSA.

6 - 35/32 MODELS - GUIDE ROLLER HAS SPROCKET TEETH. MUST BE ENGAGED.

7 - ALL MODELS - RF CUE PROBE. DOTTED LINE INDICATES THREADING PATH WHEN USED.

8 - ALL MODELS - ONE PERF SEPARATION ON SPROCKET LOOPS.

9 - ALL MODELS - HOLD-DOWN ROLLERS. CLEAR TWO FILMS, CONTACT THIRD. 16 AND 35/32 MODELS HAVE DOUBLE ROLLER HOLD-DOWNS.

10 - ALL MODELS - TENSION ROLLER INDICATORS. THREAD FILM OVER SPROCKET TO MATCH POINTERS WITH INDEX MARKS TO MAINTAIN TENSION SETTING.

NOTE: FOR 35/32 MODELS ONLY, INDICATOR POINTERS ARE POSITIONED IN MANUFACTURE FOR THREADING 35/32 NEGATIVE AND STOCK. IF 16-MM NEGATIVE IS USED WITH 16 OR 35/32 STOCK, THE POINTERS WILL BE APPROXIMATELY 1/8-INCH BELOW THE INDEX MARKS. POINTERS MAY BE RESET OR ADDITIONAL INDEX MARKS MAY BE SCRIBED ON THE DECAL.

11 - ALL MODELS - TAKE-UPS, SET ANGLE TO PROVIDE CONTACT OF GUIDE ROLLER AND FILM CLOSE TO OR BEHIND TANGENT POINT (FILM TO CORE).

12 - ALL MODELS - FILM CORES, 3-INCH (MINIMUM) DIAMETER REQUIRED.

Figure 28. Film Threading Diagram (Printer less Soundhead Attachment)

4-7. THREADING FILM ON PRINTER.

Figure 28 illustrates the proper threading of stock and negative for printer operation without soundhead. Note the path of the film when using the R.F. cuer. After film is threaded, be sure to close the film roller gate and lower the tight wind rollers to the film. Refer to the chapter on Soundhead Attachment for special film threading instructions.

4-8. THREADING TAPE IN READER.

a. Flip the sprocket guard away from sprocket (thus lowering "no tape" switch, and thread tape sideways over the switch, under the reading pin cover casting, over the sprocket, and under the sprocket guard.

b. Slip the tape into the slot at the bottom of the inside rail of the reading pin casting. Check to make certain that transport perforations are engaged with the sprocket teeth, and close the sprocket guard.

c. Slip the tape into the alignment guide at the left-hand side of the reader, and rotate the manual knob until there are approximately three inches of tape between the first program and the reading pins to be advanced. Reader now is ready for automatic operation.

4-9. AUTOMATIC FIRST CUE AND PRE-SETTING THE LIGHT VALVES. Following is an explanation of the automatic first cue and the method used for presetting the light valves to a desired setting.

When the printer is automatically stopped by the "end" program on the tape, the light valve shutters are actuated to the zero-close position. On restarting, it will be necessary to cause the shutters to open on some particular light value, which will be the first program on the tape to be used. This can only be accomplished by causing a cue pulse to occur after the first program is read out.

An automatic cue pulse is provided on current model printers for this purpose. This pulse occurs immediately after the printer starts on AUTO start and the first program has been placed in memory, and requires no cue notch (or cue patch) in the film. This automatic cue pulse occurs only at the start of each tape; all subsequent cue pulses must be signaled from a notch or patch on the film.

NOTE: The automatic cue feature may be eliminated, if desired, by removing relay K2-L from the reader. With the automatic cue feature eliminated a notch or patch must be used to cue the first program to the shutters. This initial notch (or patch) should not be closer than 15 inches from the cue switch (or probe) when film is threaded in order to allow time for the first program to be read out and placed in memory.

If the operator desires to utilize the printing light immediately upon printer start (from the synch frame), the following alternate method may be used to preset the shutters. It should first be noted that when the printer is stopped with the STOP button, the zero-close does not go into effect and the program at which the shutters are set will be retained.

Prior to the printing run, prepare a short tape with the desired light setting and insert this tape in the reader. Press the AUTO button to start the printer and cue this program to the light shutters either with the MANUAL CUE button on the reader or by means of the automatic first cue. The motor switch may be turned off during this presetting operation. After the cue, stop the printer with the STOP button and turn the motor switch on. The shutters will have opened to the desired setting and, with the programmed tape inserted in the reader, the printer now may be started on AUTO start.

4-10. EDGE PRINTER OPERATION.

The 16-mm printer is equipped with a single edge number printer; the 35-mm, 35/32-mm and 70-mm models with two. The printing apertures are directly in line with the picture aperture. Each edge number printer requires a lamp (Westinghouse #6, 115-125 VAC) mounted in a tube. The inner lamp tube is mounted in a cavity at the bottom of the aperture case and is held in place by a spring detent. The outer lamp tube is secured by a setscrew in a separate mount, which is fastened to the outside of the aperture case.

The edge printer lamp is controlled by an ON-OFF switch on the control panel (figure 5). When this switch is in the ON position, the printers will turn on and off automatically as the printer starts and stops. Edge printer lamp brilliance is adjusted by means of a rheostat next to the ON-OFF switch (figure 5) to compensate for film type and printer speed.

4-11. FINAL CHECKS BEFORE OPERATION.

Before starting the printer in automatic operation, the following steps and checks must be accomplished.

a. Make certain that neutral density filters are in place when required. Filter frames are located in the vane housing directly ahead of each light valve and on the mount of the #4 - #5 condenser (figure 2). The former can be used to reduce the intensity of individual color beams in specific instances of color imbalance without resorting to resetting of trimmer knobs. The latter is used to reduce the intensity of the integrated beam when switching from fast (180 fpm) to slow (60 fpm) operating speed.

NOTE: Neutral density and ultra-violet gelatin filters only are used in additive color printing. (Infrared filtering is accomplished with the heat glass installed in the lamphouse.)

b. Make certain that the optical compartment door is tightly locked.

c. Check to see that the printing lamp is turned on and the voltage properly set. The proper lamp

operating voltage usually is selected by the individual laboratory to correspond with the particular type of film being reproduced. Normally, this voltage is set for an operating speed of 180 fpm and the color beams balanced accordingly; then, when operating at 60 fpm, light beam intensity can be reduced by the insertion of a neutral density filter in the #4 - #5 condenser filter frame (step a, above).

CAUTION

If lamp voltage is altered by means of the lamp adjustment rheostats, color beams must be re-balanced. Light beam balance is discussed in paragraph 2-8, page 18.

d. Be sure to select the desired printing aperture. On those printers having more than one aperture position, available apertures are clearly marked on the aperture nameplate. Printing apertures for various models are discussed in paragraph 4-1w. The single aperture 16-mm model has no track aperture incorporated into the picture head and requires the 16-mm soundhead attachment for sound track printing. This soundhead has a selective two-way aperture.

e. Set the drive system for the desired speed (paragraph 3-3) and check to see that the proper speed indicator (figure 23) is lit.

f. Reset all counters to zero.

g. Check fade indicators (figure 23). One or the other must be lit. "Open" light must be on for automatic operation.

h. If printer is equipped with the R. F. Cuer, make certain that the cue selector switch is in the desired position, RF or NOTCH-RF.

i. Make certain that the program tape is properly threaded in the reader (paragraph 4-8).

j. Check to see that the trimmer knobs are set for the desired light values.

k. Make a final inspection of film threading and check to make certain that roller gate is closed and tight-wind rollers lowered to the film.

l. If edge printers are to be used, make certain that the edge printer switch is "on" and the rheostat properly adjusted (paragraph 4-10).

4-12. STARTING AND STOPPING THE PRINTER.

a. The printer is started in the automatic mode by depressing the AUTO button on the push button panel (figure 22). The Reset Start-Stop button on the reader (figure 9) will also start the printer for tape operation but will omit the low-torque (at start) take-up feature and the tape will not advance until after the start and a cue signal has occurred.

NOTE: The "Alternate" Start-Stop button has been redesignated as the "Reset" button. The later designation will be used on schematics for this switch.

b. The printer can be stopped at any time during operation by pressing the STOP button or the Reset Start-Stop button on the reader. In normal operation, the printer is stopped by the "end" program in the tape.

NOTE: A special restarting procedure must be followed when the printer stops during operation due to an out-of-cycle condition or to a blown fuse in the light valve circuit. This procedure is outlined in paragraph 4-13.

4-13. RESTARTING AFTER OUT-OF-CYCLE STOP. (See page 31.)

a. Turn the DRIVE MOTOR switch "off" and press the Reset Start-Stop button on the reader. This will cause the red warning light on the reader to go out, but the printer again will be placed in the "on" mode by re-starting.

b. Depress the Reset Start-Stop button a second time to turn off the printer; then turn the drive motor switch back on.

c. Check to see if the slo-blo fuse (F201) in the light valve circuit is in good condition. This fuse, when blown, also will cause the printer to stop and the red warning light on the reader to light. Replace fuse, if blown, as instructed in paragraph 6-2f.

d. If the fuse was in good condition (step c, above), mark the tape where the stoppage occurred and reset the tape at the start position. With film unthreaded, re-run the tape on MANUAL CUE to check the condition of the tape. If the out-of-cycle condition occurs repeatedly at the same spot marked on the tape, a faulty tape is indicated. If the out-of-cycle condition occurs immediately (at START or first cue), check for a probable fault in the reader.

4-14. OPERATING PRECAUTIONS.

a. If the fade cycle is interrupted by a power failure or by the accidental cut-off of the main power switch or AC switch, the completion of the fade cycle must be accomplished manually.

b. If the MANUAL CUE button is pressed inadvertently during automatic operation, a cue will be signaled.

c. If the MANUAL FADE button is pressed inadvertently during automatic operation, a 16-frame fade will be placed "in memory" and will actuate on the next cue signal received.

d. If the STOP or the reset start-stop button is pressed inadvertently during automatic operation, the printer will stop.

e. The take-ups will not operate unless the tight-wind rollers are lowered down on the film.

f. The printer will not operate if the negative break cut-off switch is actuated (improper negative threading may cause this condition).

g. If the tape is manually ratcheted erroneously during automatic operation, it must be returned to its proper location before the next cue, otherwise the safety circuit will be tripped, stopping the printer. It should be noted, however, that the safety circuit will not detect a condition wherein the tape has been ratcheted exactly four steps (one complete cycle), or multiples thereof, out of position.

h. The air inlet or exhaust vents on top of the vane housing must not be covered or overheating will result.

i. The minimum scene length for light changes is 44 frames of 16-mm film (18 frames of 35-mm film) when operating at 180 fpm (4-1/3 inches at 60 fpm). These minimum scene lengths are approximate and each printer should be tested at 180 fpm speed with loops having notches spaced at 42, 44 and 46 frames (16 mm) or 17, 18 and 19 frames (35 mm) to ascertain the exact minimum scene length that will safely cue every program of a lengthy tape. There must be a distinct interval of quiet (30 to 40 milliseconds) between the audible memory action of the light valves and the audible action of the next cue pulse as the pulse causes the vane solenoids to energize and move the vanes. Under no circumstances should there be an overlap of these audible occurrences. The cue counter may be used to verify an overlap since the following cue will be missed. Always allow approximately 4 frames (16 mm), in addition to the fade length selected, after each fade and before the next cue notch. For example, for a 48-frame fade, allow 52 frames to the next cue notch. Where a fade length of less than 48 frames is programmed, the 44 frame minimum scene length must still be maintained at 180 fpm. Since time is the important factor involved in this printer capability, it should be noted that operation at 60 fpm will reduce all of the above limitations to one-third (both minimum scene lengths and length after fades). For example: at 60 fpm, the minimum scene length for light changes will be 15 frames of 16-mm or 6 frames of 35-mm.

NOTE: Regarding minimum scene length at 180 fpm for printers operating on 50 cps AC, reader motors will operate at 1425 rpm rather than at 1725 (at 60 cps). This results in a 425 ms four-step cycle rather than 350 ms (at 60 cps). Therefore the minimum scene length will be approximately 53 frames (16 mm). A reader pulley modification will shortly be available to effect a 44 frame minimum scene at 50 cps.

j. If the roller gate is open, the printer will not start on AUTO start and the douser will not open. TEST start is not affected by this feature.

k. If fader is "closed," printer will not start on AUTO start (TEST start is not affected by this feature). The customer may elect to have this circuit reversed so that printer will not start with fader "open," or to have this feature eliminated altogether.

l. On printers with R.F. cuers, the cue selector switch must be in the correct position or cues will not occur. On Design 6395-D (transistorized) RF cuer, the selector switch has two positions marked RF and NOTCH-RF. With switch on RF, a cue signal to the printer will be produced only from a cue patch. When using this setting, the film must be threaded over the RF nylon roller. With selector switch on NOTCH-RF and the film threaded over the RF nylon roller, cue signals will be produced both by patches and notches if both are present on the film. If notch cuing only is desired, use NOTCH-RF switch position but do not thread film over the RF nylon roller.

4-15. OPERATOR'S TROUBLESHOOTING GUIDE.

The Operator's Troubleshooting Guide follows the same step-by-step sequence outlined in pre-testing procedures (paragraph 2-7, page 13). Whereas each step of the pre-testing procedures indicates the normal result to be expected, the troubleshooting guide lists the probable causes and remedies should a malfunction occur at the particular stage of the procedure. The first column of the chart indicates procedural step where the malfunction is first most likely to be noticed during normal step-by-step operation of the printer.

OPERATOR'S TROUBLESHOOTING GUIDE

PAR 2-7 REF.	TROUBLE	PROBABLE CAUSE	REMEDY
		NON-AUTOMATIC TEST TROUBLES	
a(1)	Safelight does not light; indicators not illuminated.	Power input disconnected or improperly made.	Reconnect A. C. plug; check for presence of A. C. at printer utility outlets. Power will indicate trouble in printer; no power indicates trouble in supply source or cable.
		Blown fuse in building circuit.	Replace fuse.
		Faulty AC switch.	Replace switch.
a(1)	Safelight does not light, but other indicators do.	Safelight lamp burned out or loose in socket.	Replace lamp; tighten.
		Faulty lamp switch or defective lamp wiring.	Check wiring; replace switch.
a(1)	Safelight lights but one or more indicators do not.	Indicator lamp burned out.	Replace lamp (par. 6-1).
		Wire disconnected from lamp holder.	Reconnect wire.
		Open circuit in negative line to lamp.	Clean indicator door latch (the negative connection.)
a(1)	DC voltmeter dial only does not light.	Dial illumination level potentiometer at "no light" position.	Rotate knob for proper illumination level.
		Open circuit.	Check continuity to voltmeter terminals (10K to 1.010M variable resistance).
a(1)	Fade indicators only do not light.	Fader not fully open or closed.	Manually open or close fader.
		Defective S502 in fader.	Replace S502.
		Open circuit.	Check continuity of fader circuitry.
a(1)	Speed indicators only do not light.	Defective speed selector switch in belt drive.	Replace switch S1004.
		Open circuit.	Check continuity of 180 speed switch circuitry.
a(1)	Neither speed nor fade indicators light.	Defective 6-volt transformer in vane housing.	Replace transformer T701.
		Open Indicator light control resistor.	Replace resistor R701.

PAR 2-7 REF	TROUBLE	PROBABLE CAUSE	REMEDY
NON-AUTOMATIC TEST TROUBLES (CONT)			
a(1)	Neither speed nor fade indicators light. (cont)	Improper connection, J703 in vane housing to instrument panel P601.	Reconnect or replace.
a(3)	Reader motor does not run with power switch "on."	Reader cable (from J202) disconnected or faulty. Faulty motor start switch. Open motor windings. Open circuit.	Tighten connector or replace. Replace switch. Replace motor. Check continuity of motor circuit (see drawing no. 034005).
a(4)	Tight-wind will not latch in the raised position.	Faulty latch button spring.	Replace or reform spring.
a(4)	Circuit to take-up motor remains closed with tight-wind up and locked.	Defective micro-switch in take-up.	Replace switch S1101.
a(7)	Counter will not reset.	Defective counter.	Replace reset feature or replace counter.
a(8)	Reader advances when AUTO button is pressed during test.	Tape in reader. Tape switches defective or stuck in the wrong position.	Remove tape. Check tape switch continuity. S210A should be closed and S210B open with tape removed.
a(9)	No start action on TEST; douser does not open.	S210A in reader open or dirty. If printer starts with alternate start-stop switch, STOP or AUTO buttons may be defective. Defective relay (K1505 or K1502) in control panel.	Clean or reset S210A. Clean switch contacts or replace faulty switch button. Replace faulty relay.
a(9)	Douser opens but printer does not operate.	Motor cable improperly connected. Motor or cable defective. Open circuit.	Connect cable securely. Replace motor assembly. Check continuity.
a(9)	Printer fails to start.	Turn motor switch on.	Check motor switch circuit breaker.

PAR 2-7 REF	TROUBLE	PROBABLE CAUSE	REMEDY
NON-AUTOMATIC TEST TROUBLES (CONT)			
a(9)	Printer starts but acceleration is too slow.	Low AC input to printer.	Check AC source for proper voltage.
a(9)	Douser fails to open.	Defective douser solenoid. Open circuit.	Replace solenoid. Check douser circuit.
a(9)	Footage counter does not operate.	Defective switch in belt drive. Defective foot counter. Open circuit.	Clean and adjust contacts or replace switch S1003. Replace counter L603. Check circuit to foot counter.
a(10)	Dynamic braking not functioning.	Relay K1504 in control panel "dropping out" too fast. Defective relay K1504 or K1502 in control panel.	Replace delay components R1503 or C1505 in control panel. Replace relay.
a(10)	Douser fails to close.	Douser armature sticking in energized position.	Clean and lubricate armature or replace solenoid.
a(12)	Printer running but edge light does not light.	Edge lamp burned out. Defective S103 in control panel. Open circuit.	Replace lamp. Replace faulty component. (Check cable connections.) Check edge light circuit from control panel.
a(12)	No change in edge lamp brightness when rheostat is operated.	Defective edge light rheostat R102.	Replace rheostat.
a(14)	Printer starts but neither take-up motor operates when TEST button is pressed.	Relay K1502 defective. Open circuit from control panel to torque motors.	Replace relay. Check continuity to motors.
a(14)	Printer starts but one take-up motor fails to operate when TEST button is pressed.	Open circuit or defective motor.	Switch take-up motor cable connections on control panel as a check of trouble. Check continuity.

PAR 2-7 REF.	TROUBLE	PROBABLE CAUSE	REMEDY
NON-AUTOMATIC TEST TROUBLES (CONT)			
a(18)	Cue counter fails to register.	Contacts 8-12 on reader relay K2-A not closing.	Adjust contacts or replace relay K2-A.
		Defective counter.	Replace counter.
		Open circuit.	Check continuity from reader and vane housing.
a(19)	Fader does not operate when MANUAL CUE button is pressed after MANUAL FADE is signaled.	Defective fader relay K5-M.	Exchange relay and try again. (If fade still does not occur, but does occur in automatic test, check for faulty MANUAL CUE or FADE switch.)
		Open circuit.	Measure B+ at bottom terminal of reader switch S207 and continuity from top terminal of S207 to K5-M in fader.
a(19)	Fade counter does not register.	Defective counter.	Replace counter.
		Defective switch S501 in fader.	Replace switch.
		Switch S501 out-of-adjustment with its cam.	Readjust switch and cam.
		Open circuit to counter.	Check continuity.
a(19)	Fader indicator does not light after fade is completed.	Indicator lamp burned out.	Replace lamp.
		Switch S502 defective or out-of-adjustment with its cam.	Readjust or replace switch.
		Open circuit to indicators.	Check continuity.
a(20)	Printer does not start with alternate start-stop button.	Defective alternate start-stop switch.	Replace switch.
		Open alternate start circuit.	Check continuity.
a(20)	Printer does not stop with alternate start-stop button.	Same as preceding. However, if printer was started with TEST button, alternate start-stop button will not stop printer.	Replace switch or check continuity.
a(23)	Notch cue does not operate.	Switch improperly adjusted.	Adjust switch (par. 5-7).
		Defective notch cue switch.	Replace switch.
		Defective reader relays (K2-A, K2-V, or K2-W).	Interchange relays as a check. Replace faulty relay.

PAR 2-7 REF.	TROUBLE	PROBABLE CAUSE	REMEDY
NON-AUTOMATIC TEST TROUBLES (CONT)			
a(23)	Notch cue does not operate. (cont)	Open circuit to switch.	Check continuity.
a(25)	No change in meter dial setting when HI-LO switch is operated.	Faulty switch.	Replace switch. Check continuity to switch.
a(25)	Lamp and both blowers do not function.	Defective lamp switch. Open AC circuit.	Replace switch. Check continuity.
a(25)	Blowers operate but lamp does not light.	Defective printing lamp. Defective relay K1 in vane housing. Open circuit or defective COARSE or FINE rheostat.	Replace lamp. Replace relay K1. Check continuity.
a(25)	Lamp lights but rheostat blower or lamp blower does not operate.	Defective blower. Open circuit to blower.	Replace blower. Check continuity.
a(25)	Lamp and blowers function but voltmeter does not register.	Defective voltmeter. Reversed polarity on DC input cable.	Replace voltmeter. Change leads in cable plug.
a(26)	Voltmeter reading remains at maximum when COARSE tuning knob is turned.	Lamp filament shorting out.	Replace printing lamp.
a(26)	No needle movement when FINE rheostat knob is turned.	FINE rheostat shorted out or wired incorrectly.	Rewire or replace rheostat.
AUTOMATIC TEST TROUBLES			
b(3)	Green synch light does not operate.	Roller gate switch cable disconnected from control panel. Burned out synch lamp. Defective roller gate switch.	Connect switch cable securely. Replace lamp. Check continuity; replace switch if defective.
b(4)	Printer starts with aperture gate open.	Roller gate switch cable disconnected. Roller gate switch out-of-adjustment. Defective gate switch.	Connect switch cable securely at control panel. Loosen switch screws and position switch to actuate when gate is approximately 1/2 inch from aperture. Replace switch.

PAR 2-7 REF.	TROUBLE	PROBABLE CAUSE	REMEDY
		AUTOMATIC TEST TROUBLES (CONT)	
b(6)	Film break switch does not stop printer.	Switch-to-CUE receptacle cable loose.	Reconnect cable.
		Switch out of adjustment.	Adjust switch (para. 5-11g, page 66).
		Defective switch.	Check continuity, replace switch if defective.
b(9)	Printer does not start when AUTO button is pressed and held.	If tape does not advance, fader may be "closed."	Manually open the fader.
		If tape advances thru 8 hole, reader pin contacts K2-8B may not be making, or reader relay K2-G is defective.	Check pin contacts K2-8B for sticking; check continuity of start and stop circuit; replace relay K2-G. (If printer starts momentarily and then stops, also check reader relay K2-F.)
		Open circuit.	Check continuity of start circuit.
b(10)	Light 50 program goes into memory but douser fails to open.	Defective douser solenoid.	Replace solenoid.
		Defective douser starting capacitor.	Replace capacitor.
		Open circuit to douser.	Check continuity.
b(10)	Light 50 program does not go into memory.	Open circuit.	Check continuity, light number sequence circuit. (Look for loose taper pins in cam switches.)
b(10)	Tape advances continuously until "stop" hole is read out.	Faulty reader relay (K2-E, K2-1J, K2-2J, K2-3J, K2-N, K2-D, K2-S or K2-T).	Interchange relays until faulty relay is detected. Replace.
b(10)	One light valve slide does not function.	Defective light valve or reader relay.	Use extension cables supplied and cross-connect the suspected light valve with another. If suspected light valve continues to malfunction but second light valve does not, defect is in the light valve. If both light valves malfunction, check for faulty reader relay (K2-1D, K2-1J, K2-2D, K2-2J)
b(11)	Light valve shutters do not open or close to programmed light when MANUAL CUE is pressed.	Reader fuse blown (cue circuit to vane solenoids).	Replace fuse.
		Cam switch S208 open at start of cycle.	S208 must close at 350°.
		Open circuit in cue pulse to vane solenoids.	Check continuity.
b(14)	Automatic first cue feature does not function.	Defective reader relay K2-L.	Interchange relay K2-L with known good relay and replace if defective.

SECTION V

Preventive Maintenance and Adjustments

5-1. GENERAL

To keep the equipment at peak operating efficiency, it is vitally important that a regular and systematic routine of preventive maintenance be instituted and adhered to. Such a routine may be based on the number of hours of operation or the number of cues, or both. Actual printer running time is indicated on the hour meter mounted on the rear of the vane housing. Since most laboratories already have established routine maintenance procedures, the following recommended schedule might be modified to conform to existing schedules.

5-2. CLEANING INSTRUCTIONS

CAUTION

Pointed or sharp metal instruments must never be used to remove dirt or emulsion accumulation from any of the parts that come in contact with film. If ordinary cleaning methods do not suffice to remove accumulated dirt, use a spatula-shaped piece of wood (such as an orange stick or toothpick) to loosen the dirt. Then wipe the parts carefully with a soft, clean, lint-free cloth. It is also important that precautions be taken to guard against corrosion or physical damage to these parts.

a. GENERAL CLEANING INSTRUCTIONS. Printer exterior may be cleaned with a cloth dampened with carbon tetrachloride or trichlorethylene. The printer lamp voltmeter face is plexigas or plastic and should not be cleaned with ordinary chemical cleaners. Wipe roller, control sprocket and other parts in printing area with a soft, lint-free cloth. Inspect all sprocket teeth carefully and remove any accumulated dirt.

b. CLEANING PRINTING APERTURE. Clean printing apertures thoroughly with a soft camel's hair brush and/or air hose. The air jet in the printing head may be used for this purpose when there is no film in place over the aperture, by momentarily applying high air pressure. Dirt in the aperture will probably cause a density variance across the film while printing.

c. CLEANING OPTICAL COMPONENTS. Refer to Figure 16, page 21, for numerical designation of optical components. Refer to paragraph 6-3, page 70, for instructions on gaining access to the various optical components.

Condensers and cover glasses may be cleaned with soft, well washed cotton cloths, such as diaper material. Commercial lens cleaning solutions may be used. An excellent solution may be prepared using the following formula:

Detergent Lens Cleaning Solution -
Composition by Weight
1.0% Duponol WA Paste
0.5% Ammonium Hydroxide (28 - 30%)
10.0% Isopropyl Alcohol (99%)
88.5% Distilled Water

Note: Do not use this solution on dichroic mirrors.*

*(This note should appear on the label of the bottle used for the above solution.

Isopropyl alcohol may be used in the absence of other solutions. Clean the glass with a cloth dampened with the cleaning solution and immediately wipe dry with another cloth.

Dichroic mirrors should be cleaned only when absolutely necessary. Use only isopropyl or grain alcohol sparingly with soft cotton cloths or cotton swabs on the coated sides. The coated side of the mirrors faces the mounting frame. (Refer to Figure 33, View B, page 63.) The back side of the mirrors has no coating and need not be handled as cautiously as the coated side. Note: Do not use any solution containing distilled water on mirrors. Dust should be removed from the mirrors and condensers, when it becomes present, by the use of a long bristled camel's hair brush which has been cleaned with ether. Dust should be dislodged from the glass with the brush and drawn away with a vacuum cleaner.

d. CLEANING LAMP BLOWER. Remove the four screws and lift off blower air intake cover. Remove accumulated dust and dirt with a vacuum hose.

e. CLEANING ELECTRICAL COMPONENTS. The electronic component assemblies, other than those specified below, require only an occasional cleaning with a vacuum hose to remove loose dust and dirt.

All relays (in the reader, tape punch, control panel and fader assembly) should be inspected occasionally for indications of burned contacts. If burning is slight, dress the contacts with a relay contact burnisher. If indications of arcing exist, check the arc suppression components in the circuit.

Every three months (500 hours), clean cam switches in the reader and tape punch with a contact burnisher. To accomplish this, remove capacitors C204 and C208 from their mounting. Then remove two contact mounting screws and carefully swing entire cam switch mounting block out away from the frame without disturbing switches or wiring. (Underlined items are illustrated, on pages 18 and 27 of the Motorized Tape Reader instructions, Section VIII). At this time, check to see that fiber buttons in the switch frames move

freely with switch action. After dressing the contacts, reinstall mounting block securely. Then check "make" and "break" settings of cam switches (paragraph 6-14).

5-3. CORROSION PROTECTION.

Whenever possible, components with exposed metal surfaces have been manufactured from corrosion resistant materials. However, in some laboratories the presence of chemical vapors and the cycling of temperature and humidity (particularly when the air conditioning is turned off) will promote corrosion. Obviously, installation and operation of the printer in a clean, constant-temperature atmosphere will minimize these undesirable effects. At the end of each day's operation, wipe the surface of the gate roller, printing sprocket, and convex surface on which the film rides with a soft, lint-free cloth.

5-4. LUBRICATION.

The following schedule is furnished only as a guide to indicate lubrication points. It may be necessary to vary quantities and intervals to suit your particular environmental conditions. However, be sure that all items in the schedule receive adequate and regular attention. Unless a specific lubricant is mentioned, use a good grade of S.A.E. 20 oil or Master Lubricants Co., Lubriko M3 Special grease (or equivalent).

These components will not require lubrication:

Drive motor and belt drive
Take-up motors
Tight-wind guide rollers
Cue switch roller
Film transport rollers
Roller gate bearing
Film transport gear case shaft bearings

WEEKLY LUBRICATION.

Blower Motor (Printing Lamp): Apply two drops of oil to each oil hole.

MONTHLY LUBRICATION.

Roller Gate: Remove roller gate and stud. Wipe the stud with an oil-damp cloth.

NOTE: Detailed lubrication instructions for reader and punch units on printer, program tape punch and tape checker-duplicator will be found in Section VIII. Briefly, the following items will require lubrication.

(1) Clutch - small amount of grease into fitting in clutch end of driven shaft.
(2) Pulley bushing - remove screw from pulley hub and put two drops of oil in screw hole.
(3) Motor bearings - two or three drops of oil in each bearing oil hole.
(4) Cams - a speck of Silicone grease on each cams surface (cam switch area).
(5) Punch and reading pin area - grease and oil on operating cams and leverage, see Section VIII.

SEMI-ANNUAL (1000 HOUR) LUBRICATION.

Fader Power Take-Off: Expose power take-off gears (paragraph 6-9). Clean and coat three gears with grease. The ball bearings are shielded and require no attention.

Fader Transmission and Shutter Assembly: Remove fader transmission assembly (paragraph 6-12). Use only Beacon #325 grease (Humble Oil Co.) where grease is required. (This item is not supplied by Bell & Howell.) Use Bell & Howell part no. 063111 where oil is required, for lubricating fader assembly. Gears do not require greasing. The following lubrication points are keyed, by number, to fader illustrations (figure 29).

(1) Ball bushings (six): grease on each shaft.
(2) Latch stop drum: light oil on edge of drum.
(3) Vertical shaft gear sectors (two): grease on gear teeth through access in shutter.
(4) Switch actuator gear sector: grease on gear teeth.
(5) Oilite bushings (four): two drops of oil each, except none on clutch bushings.
(6) Switch, nylon roller riders (two): speck with grease.
(7) Universal joints: two drops of oil.
(8) Lever pivot: speck with grease.
(9) Lever fork: coat friction surface with grease.
(10) Cam: light film of oil on cam edge.
(11) Input shaft oilite bushing: two drops of oil.
(12) Oil wick: when present, oil wick provided to lubricate the split-drum behind the cam should be saturated with oil specified in this paragraph.

Light Valves: Light valves must be removed for lubrication (paragraph 6-11). Use only Beacon #325 grease (Humble Oil Co.) where grease is required. (This item is not supplied by Bell & Howell Co.) Use Bell & Howell part no. 063111 where oil is required for lubricating light valves. The following lubrication points are keyed, by number, to light valve illustrations (figure 30).

(1) Gear and detent sprocket; grease lightly.
(2) Shaft; grease both ends, at bearings.
(3) Grease fork and pin; oil the felt washer.
(4) Latch and solenoid levers (seven); grease lightly at contact points.
(5) Unlatch bar (seven); grease at latch point.
(6) Latch lever pivots (six); one drop of oil each.
(7) Crank pivots (three); one drop of oil each.
(8) Lever pivots (two); one drop of oil each.
(9) Spring loops and crank pivots; oil lightly.
(10) Slides; grease from both ends at rollers.
(11) Spring; grease friction points.
(12) Trimmer shaft screw thread; heavy oil.

Douser: The douser is located within the optical compartment. Apply a light coating of grease to each ball or race under rotary solenoid armature.

ANNUAL (2000 HOUR) LUBRICATION.

Film Transport Gears: Remove the gear case cover (paragraph 6-10) and clean and coat all gears with grease. Gear shaft ball bearings are shielded and require no lubrication.

Blower Motor (Printing Lamp Rheostat - Muffin Fan): Insert tip of oil injector through screen on of vane housing. Injectors and refills available from Rotron Mfg. Co., Inc., Hasbrouk Lane, Woodstock, N.Y. (See Figure 7, page 4) for "Muffin" type).

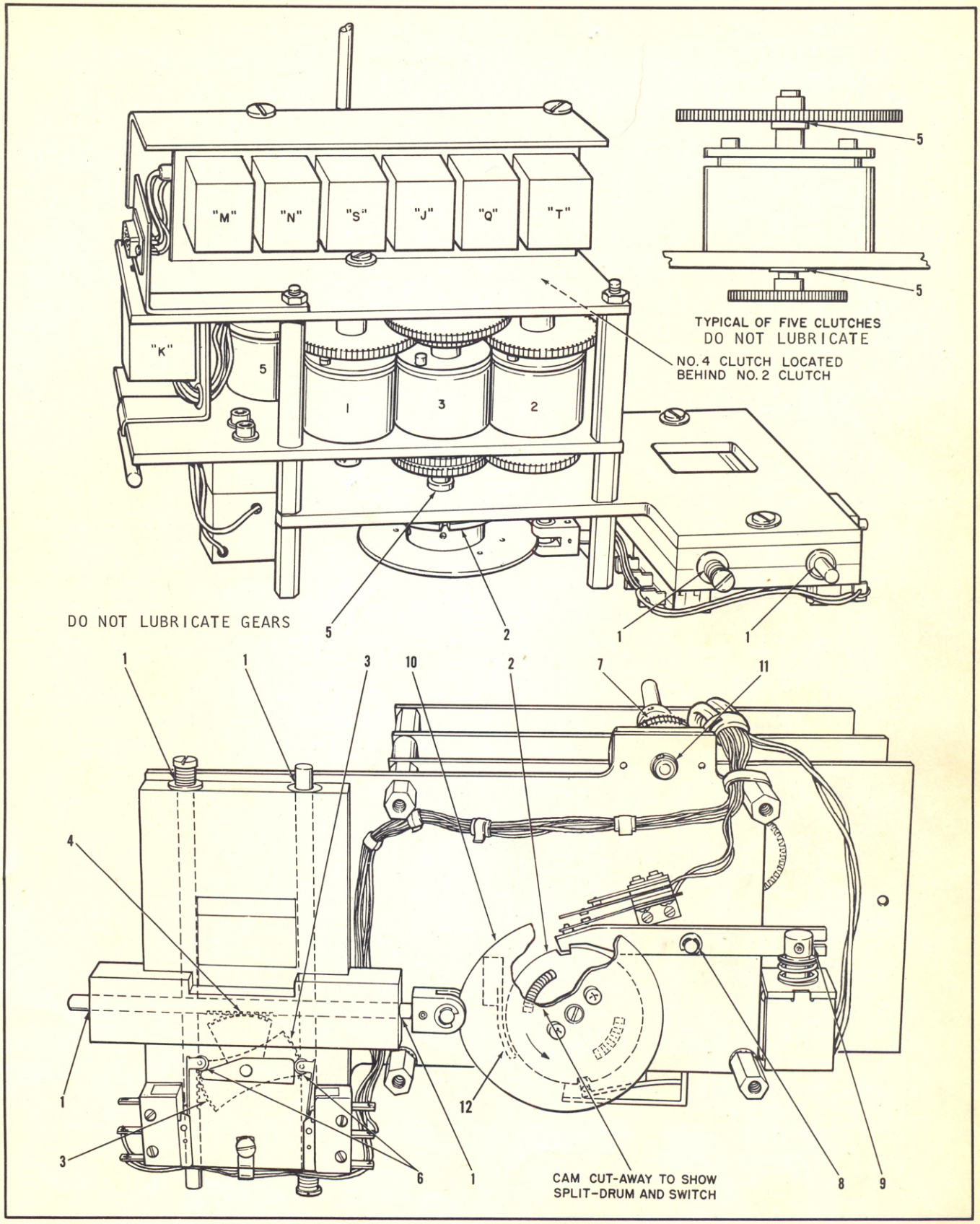

Figure 29. Fader Assembly Lubrication Points

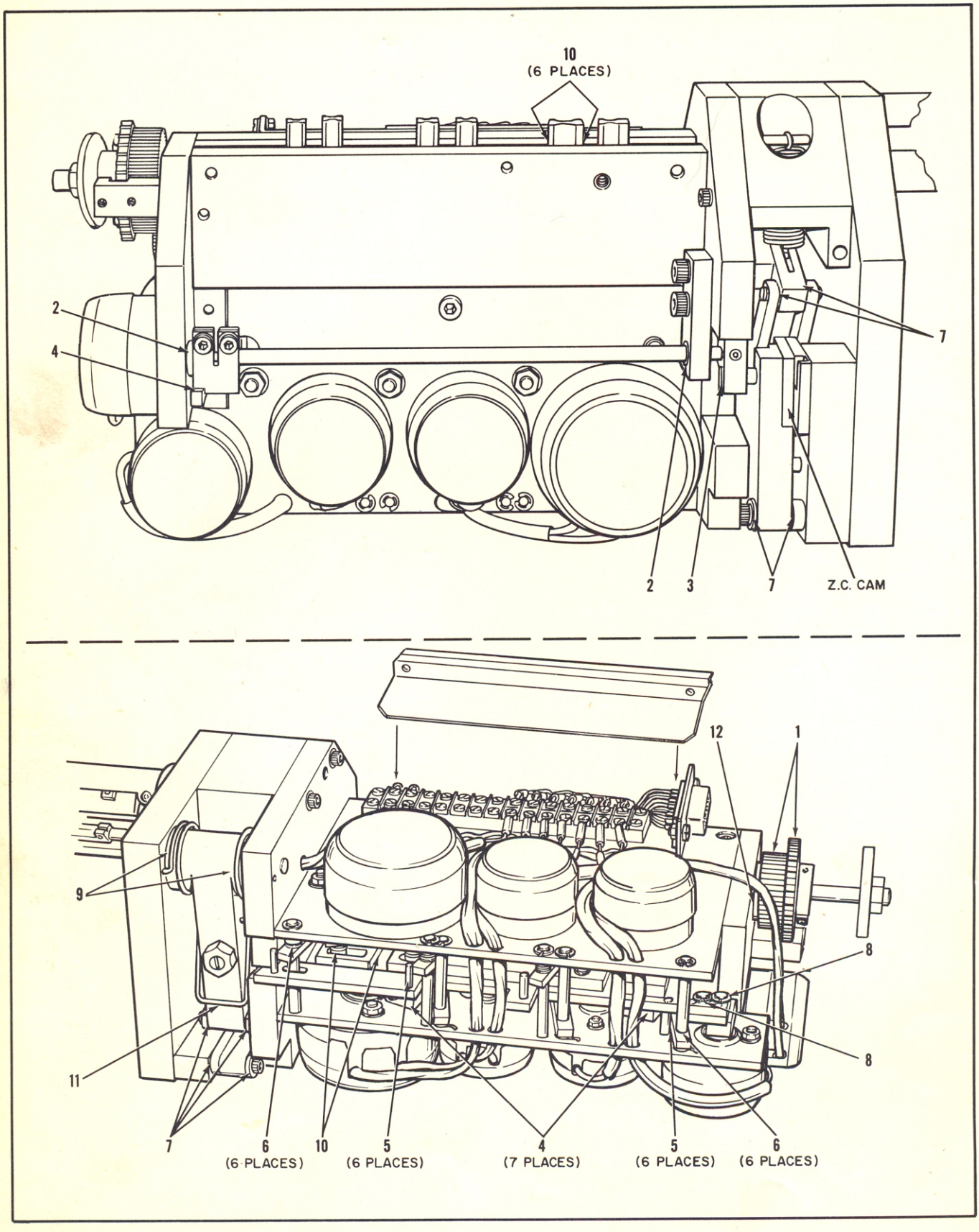

Figure 30. Light Valve Assembly Lubrication Points

Take-up Assembly (rotary rheostat type): Remove guide roller lever and rheostat cover (para. 6-6b). Grease ball thrust bearings on roller lever pivot shaft with American Oil Company Supermil ASU grease M-100.

5-5. PERIODIC OPERATION CHECK.

a. LIGHT BEAM INTENSITY CHECK. Using a densichron or micro-ammeter with suitable probes, take light readings of each separate color beam at the aperture and compare the readings with those recorded when the color beams were initially balanced (para. 2-8). If present readings are lower, clean all optics, including the lamp, and check again. If present readings are considerably lower, even after cleaning, bring readings up to proper level by adjusting lamp voltage, altering trimmer knob settings or replacing the printing lamp. If the lamp is replaced, or its voltage readjusted, the light beams must be rebalanced.

NOTE: Most of the tape reader functions will be under observation as the light valves and fader are being checked (steps b through g, following). It is suggested that the reader cover be removed during these checks so that any arcing of relay or switch contacts can be noted during operation.

b. LIGHT VALVE POSITION CHECK. The operation of the light valve (paragraphs b through f, following) may be checked visually by removing the rear cover of the vane housing and observing the slide cams of each valve as a specially prepared tape is run on the reader. The tape is programmed from 1 to 50 in red; green, and blue with pairs of each cycle of numbers (1-1-1, 1-1-1, 2-2-2, 2-2-2, 3-3-3, 3-3-3, and so on) and the program is cued with the MANUAL CUE button. The #1 slide is closest to the indicator dial.

(1) As each program is read out, note that whichever channel of the tape (from 1 to 6) has no hole, its respective slide in the light valve will protrude approximately 1/2 inch from the valve frame after its solenoid has been energized. The slide will remain latched in that position. Also note that slides previously latched in the extended position, but not being called for in the current read-out, must unlatch and drop back into the valve frame.

(2) Since the prepared tape calls for identical numbers in red, green, and blue, all three valves must receive identical settings. On each cue, the program being checked will be the "memory" situation in the valve. Therefore, this program on the tape will be the one that has moved out just ahead of the reading pins on the reader at the cue signal.

(3) As an example, let us assume that the reader has just read out program 1-1-1. There will be holes visible in three rows of channel 1 only. On all three light valves, slides 2 through 6 will be extended. At the next cue signal, the reader again reads 1-1-1. The extended slides will give a slight jump as their solenoids are re-energized, and will remain extended.

(4) If the next program read out is 16-16-16, there will be holes visible in three rows of channel 5 only. Slides 2, 3, 4 and 6 will remain extended, slide 1 will become extended, and slide 5 will unlatch and drop back into its frame.

(5) If the three light valves respond correctly to the tape signals, it can be assumed that the memory light position of the slides is operating properly.

c. "END" POSITION CHECK. After the last program of the tape is in the "memory" position, the next following cue signal will latch all slides in the extended position. In addition, the zero-close cam (figure 21) will be latched into its active position. When latched, the lever to which the cam is affixed will be pivoted inward approximately 15 degrees.

d. "ZERO-CLOSE" MEMORY POSITION CHECK. Prepare a tape with approximately twenty zero-close and twenty RGB #50 programs, alternating one with the other. Run the tape through the reader with the printing lamp "on," watching the beam at the condenser just ahead of the douser. During the light #50 programs, a full white beam will be apparent. Since the shutters must close completely during "zero-close," the presence of light at the condenser during a ZC program would indicate a faulty or malfunctioning light valve. The color of the beam will indicate which valve is faulty.

e. ZERO FADE MEMORY POSITION AND SHUTTER ACTIVITY CHECK. On cuing the programmed zero fade into action, the three light shutters will instantly change from the previous setting to complete closure. At the same instant, the fade of the selected length will begin. When a zero fade is placed in memory, it has introduced the selected fade speed memory situation in the fader while initiating a zero close (ZC) memory situation in the three light valves. To open the light shutters to a selected light number on the next cue, it is only necessary to have programmed a light number in the tape.

f. LIGHT VALVE SHUTTER CHECK. When assured that the memory positions are operating correctly, it must be ascertained that the light valve shutters are responding properly to the programs placed in memory. Use the same tape prepared for checking the slide memory positions (step b, preceding) and set the trimmers at 24. Use a magnifying glass to observe shutter movement and proceed as follows:

(1) On AUTO start, the first program (1-1-1) will go into memory and the shutters will remain fully closed. On the first cue, the shutters will open to #1 position as the second 1-1-1 goes into memory. On the second cue, the shutters will remain at position #1 while program 2-2-2 goes into memory and, on the third cue, the shutters will open to #2 position. This will continue through the entire range of 50 light steps. With exper-

ience, the maintenance man soon will recognize the increasing amounts of shutter movement in each light step as the higher numbers are reached.

(2) If a shutter moves when a new program is being cued into memory (for example, when the second of a pair of light value numbers is being actuated), it would indicate that the shutter solenoid is energizing at the time that the slides were reacting to the memory situation. This condition usually indicates trouble in the tape reader.

(3) If one light valve shutter does not respond to the program, it would indicate a faulty light valve. If all three shutters fail to respond to the signal, it would indicate a blown fuse in the shutter solenoid circuit. This fuse is located in the reader and, in latest reader models, will cause a red warning indicator on the reader to light and the printer to stop if it should blow.

(4) If a faulty action is noted, either in the shutter response or the memory situation, shift the signals to other light valves by using the two extension cables furnished with the printer. This will aid in isolating the trouble.

g. FADE OPERATION CHECK. Prepare a tape with three or four fades of each length, each with a #16 light program. Run the tape through the reader with the trimmers set at position #1, and observe the reaction as follows:

(1) After the initial setting, the light shutters must not move from the #16 light position as each fade is cued and the fader actuates.

(2) At lowest printer speed, count fade lengths mentally from the cue to end of fade to determine that six different fade lengths actually occur. Check fader operation with other light programs in combination with fades.

(3) At zero fade, light valve shutters must close completely on the cue and the fade must commence at the same instant.

(4) During a fade with a light program, the light valve shutters must change to the program called for and must remain in that position if the same fade and light program are repeated. Each fade must be completed and allow for another fade to be started in no more than its prescribed length plus four frames of 16-mm film (or the equivalent film length in other sizes). (See paragraph 4-14i.)

h. CUE SWITCH OPERATION CHECK. With the film threaded and a notch positioned at the cue switch roller (printer "on" but drive motor "off"), turn the printer drive by hand and observe the action with a magnifying glass as the notch moves under the roller. When properly adjusted, the roller will move into the notch 3/4 of the depth of a 16-mm notch (1/2 of the depth of a 35-mm or 70-mm notch) before the switch makes electrical contact. The roller must not be riding the bottom of the notch in order for switch to actuate. If properly set (paragraph 5-7) a slightly shallow notch or shrunken film will not prevent the cue switch from actuating.

i. ROLLER GATE TENSION CHECK. Engage two four-inch lengths of film with the sprocket, and tape them tightly to the jaw. Close the gate and spin the roller. The roller should positively contact the film. Tape or hold a piece of 0.001-inch shim stock to the gear case so that it lays between the adjusting setscrew and the "anvil" stop. Close the film gate and nudge the roller with the hand. The roller should just barely be touching the film. If contact seems too heavy, readjust roller as instructed in paragraph 5-6.

NOTE: It would be advisable to inspect the roller occasionally for flat spots on its contact surface, and to make certain that no eccentricity or high edges have developed.

j. DOUSER OPERATION CHECK. Start the printer and note the response of the douser. The douser blade should snap immediately to the full-open position. Press the blade lightly toward the open position. If pressure moves the blade still further, it is recommended that the solenoid ball races be lubricated. After the initial opening energy, it should require little pressure to push the blade toward the closed

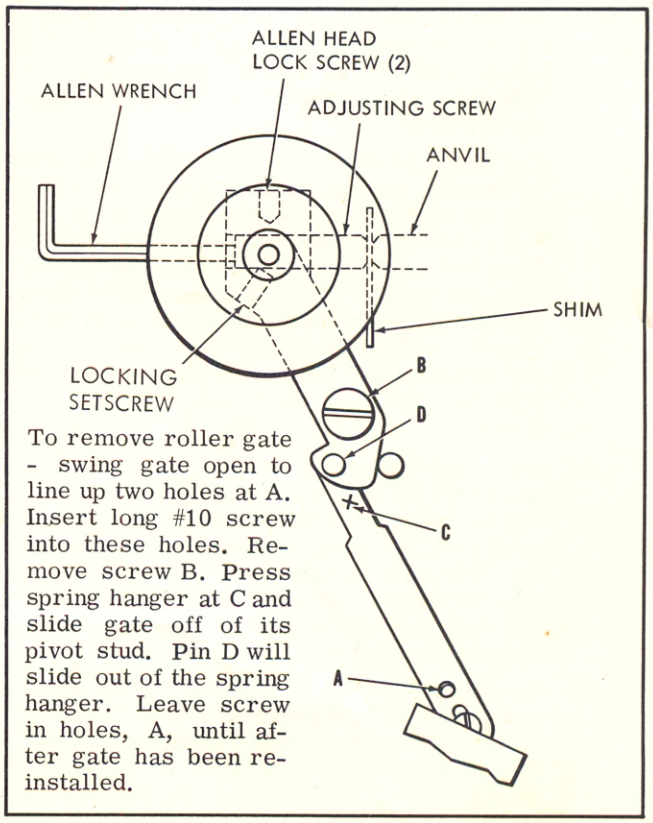

Figure 31. Roller Gate Adjustment

position with the finger. However, the solenoid must not fall out completely until the blade has been pushed more than one-fourth of its full arc. If pushed so far that it closes, the blade may not recover until the printer is stopped and re-started.

k. PRINTER OPERATION CHECK. In addition to the preceding checks, all other printer functions should be verified by following the procedures outlined in the pre-testing check, paragraph 2-7.

5-6. ROLLER GATE ADJUSTMENT (Figure 31).

a. Engage two thicknesses of film (approximately four inches long) with the sprocket and tape them tightly to the jaw.

b. Close the roller gate and adjust the adjusting screw until the roller clears the film by 0.002 to 0.003-inch. Check the lateral position of the roller to make certain that the sprocket teeth are centered in the roller groove and adjust, if necessary. Also check for flatness of roller across the contact surface.

c. Open the film gate and tape a piece of 0.001-inch shim stock to the gear case between the adjusting screw and anvil stop. Close the gate and nudge the roller with the hand, turning the adjusting screw clockwise, if necessary, until the roller spins freely.

d. Now turn the adjusting screw counterclockwise in very small increments until the roller is just lightly contacting the film and will be slowed by the contact, but not necessarily stopped. Tighten the Allen head setscrew tightly against the adjusting screw, making certain that the adjustment does not change.

e. Remove the 0.001-inch shim. The roller now will be exerting the pressure of the spring on contact, but the spring will be limited to a compression of 0.001-inch.

5-7. NOTCH CUE SWITCH ADJUSTMENT (Figure 32).

a. Before proceeding with switch adjustment, make certain that the switch radial adjustment lever is locked in position tightly against the gear case casting. Also, make certain that the adjustable spring cases for the upper tension roller levers are positioned so as not to interfere with the cue switch roller. Thread a loop of notched film on the printer.

NOTE: The Model 35/32 printer is equipped with a device to facilitate the shift of the notch switch from the 35/32-mm position to the 16-mm position without the necessity of readjusting the cue switch roller to the notch. It is necessary, of course, that the 16-mm notch size be used on both films. Note, in figure 32, that a slide plate between the radial adjustment lever and gear case is used to shift the switch in or out an exact amount equal to the difference in the gear case-to-film edge distance between the two film sizes. With the slide in the up position, the head of the adjusting screw (3) on the inner end of the switch stud enters an opening in the slide and bears directly against the gear case. With the slide plate in the down position, the switch is repositioned so that the head of the adjusting screw bears against the slide plate.

b. Loosen the lock nut on the adjusting setscrew (1) at the back of the switch housing. Gently turn setscrew in as far as it will go without forcing; then back the setscrew off 1/4 turn.

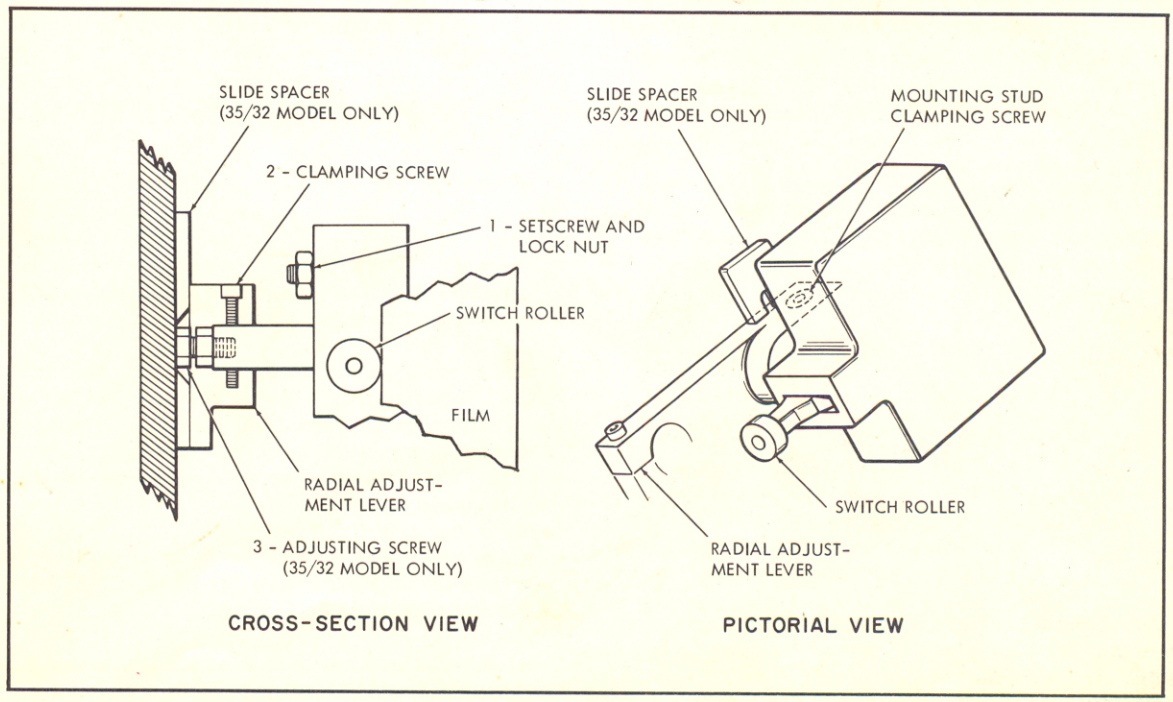

Figure 32. Notch Cue Switch Adjustment

c. Loosen clamping screw that locks switch mounting stud into radial adjustment lever. Move the entire switch assembly outward from the gear case until the switch roller just contacts the edge of the film (not in the notch). On 35/32-mm models, this adjustment is made by turning the hex head adjusting screw into or out of the switch mounting stud until the roller makes contact. The final adjustment should be checked against both film sizes (35/32 and 16-mm) to verify its accuracy. For all other printer models, the adjustment is made by shifting the mounting stud into or out of the radial adjustment lever. Secure the adjustment by tightening the clamping screw in the lever. Note that there is a slight amount of backlash in the roller lever and switch parts. When adjusting the roller to the film edge, all backlash must be taken up with a gentle pressure away from the film.

d. Rotate the film loop until a notch is opposite the switch roller. Back out the Allen head setscrew at the rear of the switch housing until the switch roller has moved into the notch to the appropriate depth (3/4 of the depth of a 16-mm film notch; slightly less than 1/2 of the depth of a 35-mm or 70-mm film notch). This adjustment will require approximately 1-3/4 turns of the adjusting setscrew for 16-mm film or 3-1/2 turns for 35-mm or 70-mm film.

CAUTION

The adjustment must be made with all backlash in the roller lever taken up in the direction away from the film.

e. Check the switch setting electrically, using either a circuit tester or the cuing circuit of the printer and observing switch roller action with the aid of a magnifying glass. As the roller arrives at the notch depth set in step d, the switch should close the circuit. The only over-travel should be the amount of backlash in the roller lever. As the roller starts to move up the opposite slope, the switch should open almost immediately. Lock the adjustment with the setscrew locking nut.

f. Light changes can be made to occur at the frame line (16-mm) or exactly between frame lines, by adjusting the angle of the radial adjustment lever after viewing a test film. Be sure to keep lever tight against gear case casting. (See frame line synching, page 44).

5-8. LAMPHOUSE LAMP AND REFLECTOR ADJUSTMENTS (Figure 6).

Each time a new printing lamp is installed, it is necessary that it be properly adjusted. This can be accomplished in a dark room without the need of going light. The lamphouse features external adjustments and the vane housing door is fitted with a viewing port.

The lamp socket adjust longitudinally (toward and away from the vane housing) to focus the lamp image. The socket also adjusts vertically and horizontally to center the image and rotates to blend the image.

a. LAMP ADJUSTMENT.

(1) Mount the "A" target over the blue light valve vanes in the vane housing. Manually close the fader to approximately a 1/16-inch slit. For printers not equipped with a fader, the slit aperture fixture will be used. Turn on the printing lamp.

(2) Adjust the lamp vertically and horizontally until the filament image is centered within the rectangle on target "A."

(3) Adjust the lamp longitudinally (focus) until the filament image is in focus on target "A."

(4) Rotate the lamp until maximum filament gap fill-in is obtained. Lock all lamp adjustments securely.

b. REFLECTOR ADJUSTMENT.

(1) With conditions the same as in step (1), LAMP ADJUSTMENT, loosen the reflector locking screw and focus the secondary filament image on target "A" by moving the mirror longitudinally.

(2) Adjust the reflector horizontally and vertically until the reflected filament image fills in the gap of the lamp image. Tighten the reflector locking screw securely.

5-9. OPTICAL SYSTEM ALIGNMENT - MODEL MB PRINTERS (Figure 33A).

The alignment of the optical system on Model MB printers requires the use of printing lamp target A (paragraph 5-8) and targets C and D. With the lamp adjusted, proceed with the mirror alignment as follows:

a. Open the front door of the vane housing. Disconnect the roller gate switch cable from the control panel and open the roller gate. Remove the No. 6 condenser (paragraph 6-3d) and the printing aperture assembly (paragraph 6-3e).

b. Install the slit aperture fixture (figure 33A) into the opening in the fader shutter frame (or the dummy frame on models not equipped with a fader). If a slit fixture is not available, the fader can be closed manually to a 1/16 inch slit. Install targets C and D where shown in figure 33A.

c. Turn MOTOR switch off. Set the trimmer to No. 1 and, using a program tape, program light 5 into the vane. Then turn on the printing lamp and set the lamp at its lowest voltage. Leave printer in the "on" mode after programming so that douser will remain open.

d. Loosen the mirror locking screws just enough so that the mirrors can be pivoted but will remain where positioned.

e. Rotate mirror No. 1 until the beam projecting downward from the mirror passes through the center of the filter holder fixed aperture. Then rotate mirror

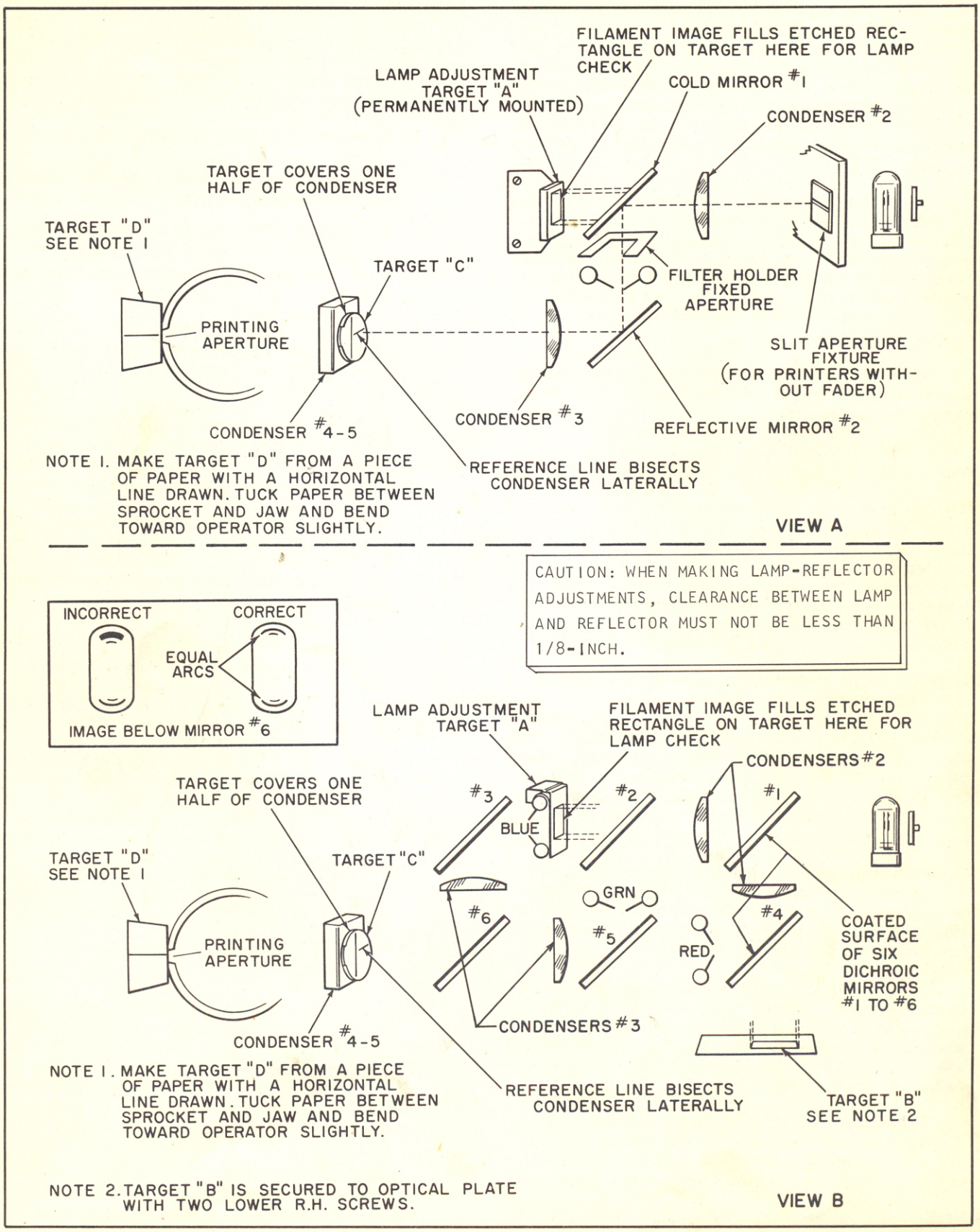

Figure 33. Printing Lamp Adjustment and Alignment of Mirrors

No. 2 until the beam of light is superimposed on the reference line on target C.

f. Rotate or otherwise position condensers No. 2 and 3 until they are visually perpendicular to the axis of the light beam. The condensers are properly set when the image on target C (or on a piece of white paper held against the target) is a perfect rectangle.

g. Rotate target C until the reference line is parallel with the beam of light. Observe the beam with reference to center of the printing aperture. The edge printing aperture will later establish the location of the printing aperture; therefore, rotate the sprocket until a tooth exactly bisects the edge printing aperture. This tooth will now simulate the center of the printing aperture.

h. If the light beam is high or low at the printing aperture, rotate the mirror No. 2 until the beam is centered at the aperture.

i. Rotate mirror No. 1 until the beam is superimposed on the reference line on target C.

j. Continue to repeat steps h and i until both conditions mentioned are met. Tighten the mirror mounting screws slowly and carefully so that the final position is not disturbed. Remove targets C and D. Also remove the slit aperture fixture (if used) or reset the fader to the open or closed position. Reinstall the printing aperture assembly and No. 6 condenser, and reconnect the gate switch cable.

5-10. OPTICAL SYSTEM ALIGNMENT - MODEL C PRINTERS (Figure 33B).

The alignment of the optical system requires the use of printing lamp target A and mirror alignment targets B, C, and D illustrated in figure 33B. before commencing with the alignment procedure, the printing lamp must be adjusted and focused as outlined in paragraph 5-8; then proceed as follows:

a. With the printer connected to the AC power source and the printing lamp "on," install all targets as shown in figure 33B. Be sure that the fader is closed to the 1/16-inch slit opening as it was for the lamp adjustment (paragraph 5-8).

b. Remove the gate switch cable from the control panel and open the gate. Open the front door of the vane housing and loosen all mirror locking screws just enough so that the mirrors can be pivoted but will remain where positioned. Turn the MOTOR switch off and start the printer.

c. Set all three light valve shutters electrically (not manually) to a uniformly small slit opening (use light #10 with trimmers set at position 1). Leave the printer in the "on" mode so the douser will remain open.

NOTE: The mirrors are to be aligned in separate pairs. The first must be the red (mirrors 1 and 4), followed by the green (mirrors 2 and 5) and the blue (3 and 6). Each mirror and condenser is located on the plate with a dowel pin and will rotate to some degree around this pin. The beams not being adjusted must be blocked by an opaque sheet placed in their filter holders. This sheet must be removed when checking the beams against each other for coincidence.

d. First align the red beam in the following manner:

(1) Block the green and blue beams by placing a 2 by 2 inch opaque card in those filter holders.

(2) Rotate mirror #1 until the lamp filament image coincides exactly with the etched rectangle on target B. Tighten mirror screws slightly.

(3) Rotate mirror #4 so that the red beam is centered on the reference line of target C. The beam must project straight out from the printing aperture. If the beam is not parallel laterally with the aperture, loosen the two hex head locking screws in the frame of the #4-5 condenser and rotate the condenser assembly until that condition is met. Tighten #4 mirror screws slightly.

(4) At this stage, the beam should coincide with the reference line on target C. If it does not, readjust mirrors #1 and #4 slightly and recheck the results; then tighten mirror screws securely.

e. Align the green beam in the following manner:

(1) Remove the opaque card from the filter holder in front of the green light valve shutters, and rotate mirror #2 until the green beam coincides with the red beam on mirror #5. Tighten mirror screws slightly.

(2) Adjust mirror #5 until the green beam coincides with the reference line on target D and target C. If necessary, readjust mirror #2 slightly so that by resetting mirror #5, the beam will coincide with both reference lines. Tighten the mirror screws and recheck the alignment.

f. Align the blue beam in the following manner:

(1) Remove the opaque card from the filter holder in front of the blue light valve shutters, and rotate mirror #3 until the blue beam coincides with the red or green beam on mirror #6. Tighten the screws of mirror #3 slightly.

(2) Adjust mirror #6 until the combined color beam coincides with the reference line on target D and target C. If necessary, readjust mirror #3 slightly so that by resetting mirror #6, the beam will coincide with reference lines. Tighten the mirror screws and recheck the alignment.

g. Aperture Position Adjustment. (Single apertures not adjustable.) After the optical system is properly aligned and while the fader is still set at the slit opening, check the aperture position as follows:

(1) Set the selector handle in COMPOSITE position (TWIN position for 35/32). The light beam should come right through the center of the aperture. If the printer is equipped with a fader, manually open the fader until the light beam is the same width as the aperture. Light should still be centered.

(2) If necessary to readjust aperture, loosen the selector handle locking screw, leaving the handle detented in COMPOSITE (or TWIN). Move the aperture ring with the fingers until the aperture is centered on the light beam. Retighten the handle locking screw.

5-11. FILM TRANSPORT SYSTEM ADJUSTMENTS.

a. UPPER TENSION ROLLERS ADJUSTMENT. (See figure 4.) The adjustable springs on the roller levers are set in manufacture to produce optimum resolution and steadiness. If the position of these springs is inadvertently disturbed, then they must be reset. The tension springs may be adjusted separately, as each spring case is locked in position on its shaft with an Allen screw. When resetting on 16-mm and 35-mm models, the spring cases must be pressed back toward the gear case as far as possible to prevent interference with the cue switch. On 70-mm models, the spring cases should be centered with roller levers over which they ride. Printers are equipped with a tension roller indicator and decal arrangement to facilitate tension adjustment. By observing the indicators at threading, the operator can note the position of the pointers and thus repeat future threadings exactly to insure identical spring tension settings for all printings. The indicator pointers themselves are adjustable and can be set so that they coincide with the position lines on the decal. First thread the printer so that each tension roller lever is in the approximate center of its free swing. Loosen the pointer clamping screws and adjust each pointer to match its position line on the decal. Then tighten the clamping screws securely and remove the film. Loosen the screws that retain the tension rollers on their shafts and engage a loop of string behind each screw head. Hook a zero to 20 ounce Chatillon scale in the loop and, holding the scale at the angle of the swing arc of the roller, lift the roller until the pointer is aligned with its position line. Note that the negative roller must be raised about 1/2-inch by hand when taking the reading of the stock roller. While maintaining the alignment of pointer and position line, adjust each spring case to obtain the appropriate tension (18 ounces for negative roller; 16 ounces for stock roller). Tighten the tension roller retaining screws after the adjustment has been made. Effect of various tension settings can be visually observed by performing a resolution test on film per standard practices.

NOTE: On 35/32-mm models, the above indicators are set for 35/32-mm negative and stock. If 16-mm negative is used, the pointer will be slightly off the index mark. Pointers may be reset to match index, or an additional index may be scribed on the decal.

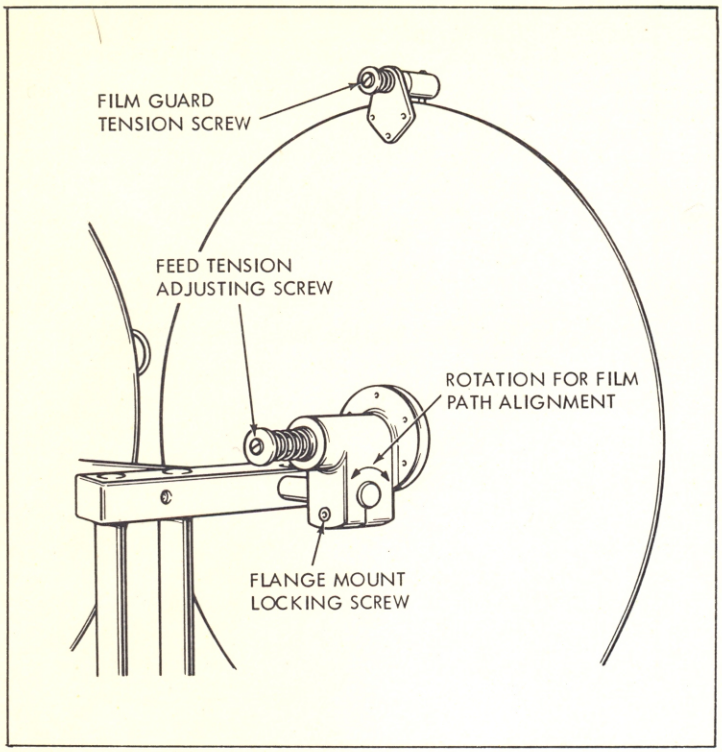

Figure 34. Feed Flange Adjustments

b. FILM PATH ALIGNMENT. With the test film threaded on the printer, the feed flanges, film rollers, and take-up hubs must be aligned with the normal path of the film. Each film roller stud is adjustable and is secured either by a setscrew or a clamp so that the roller and stud can be moved in and out. To align the feed flanges vertically with the film path, loosen the screw in the flange mounting bracket and rotate the bracket on its supporting bar (figure 34). When the film path has been aligned (check visually), tighten the screw securely. To align the take-up hubs with the film path, briefly run the printer to determine the direction and amount of adjustment required. The adjustment is made by the trial-and-error method until the film path runs true. Lift the tight-wind guide rollers away from the film while shifting the take-up hubs on their shafts until the film is running true; then tighten the hub setscrews securely. Finally, adjust the tight-wind guide rollers to match the setting of the take-up hubs. The guide roller is fixed on its shaft so the shaft must be shifted in or out of the roller hanger housing (or pivoting lever) until alignment has been made. Lock the shaft by tightening its retaining screw.

c. FILM HOLD-DOWN ROLLERS (Single Roller Style) (Figure 4). Adjust the hold-down assembly for proper film clearance. With two thicknesses of film held snugly around the sprocket, the roller must spin freely; with three thicknesses of film in place, the roller must make light contact with the film. The adjustment is made with a setscrew which then is locked with a lock nut.

d. FILM HOLD-DOWN ROLLERS (Dual Roller Style) (Figure 4). Used only on the 16-mm and 35/32-mm printers. These rollers should be adjusted so that when the lever is locked in its detent with roller against the film, the clearance between both rollers and the film will be identical and of the following amount: Rollers shall clear two films (of type being used) wrapped snugly around the sprocket and shall lightly contact a third layer of film added to the pack. Procedure for adjusting the assembly is as follows.

NOTE: If the rollers of the assembly have not been previously aligned laterally with the sprocket (clearance channels evenly over the teeth and flanges clearing the sprocket edges), then use extreme caution that the assembly is not snapped down into its detent before making this adjustment.

(1) Loosen the setscrew holding the eccentric stud (closest to the lever pivot) and turn the stud to the position that will cause its roller to be at maximum distance from the sprocket. The stud may be rotated by the use of a screwdriver in the roller retaining screw, turning clockwise. It may be preferable to remove the entire roller and eccentric stud prior to the next step.

(2) Lock the assembly down over the sprocket (and the three films) into its detent. Adjust the clearance adjusting screw to the point at which the roller on the non-eccentric stud is lightly contacting the films. Tighten the setscrew which locks the clearance adjusting screw before this adjustment is finalized.

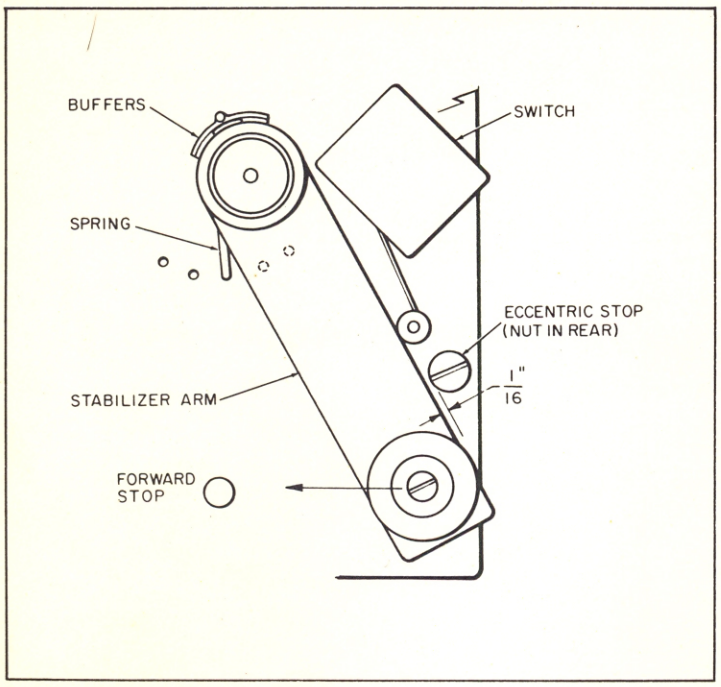

Figure 35. Film Motion Stabilizer Adjustment

(3) Check the lateral position of this roller relative to the sprocket. If not exact, loosen the roller stud setscrew and move the stud in or out to effect correct position. Retighten the setscrew. Leave assembly in the locked-down position.

(4) Loosen setscrew of the eccentric stud and turn the stud to the position that will cause its roller to make light contact with the three films. This may best be accomplished if the previously adjusted roller is removed from its stud during this adjustment.

(5) Check the lateral position of the roller on the eccentric stud. Reposition if necessary. Tighten the setscrew securely.

(6) Replace the first roller, remove one piece of film and recheck the assembly adjustment. Both rollers should now clear the two films.

If the original single roller hold-down assemblies are being replaced by the dual roller style, it will be necessary to remove the present roller and stud and install it in the new dual roller lever. It should be placed in the hole farthest from the pivot. The locking and clearance adjusting screws must also be changed over. The original lever retaining screw should be discarded and the new special lever retaining screw installed. It will be necessary to remove the eccentric stud and roller from the assembly until the above special screw is installed and tightened with the lever assembly in place on its pivot stud. It may be left removed until steps 2 and 3 above are complete. It may then be inserted in the lever to accomplish steps 4 and 5.

e. FEED FLANGE HUB TENSION ADJUSTMENT. The feed flange hubs must rotate smoothly, but must not coast when the printer stops. Insufficient tension is indicated when film spills from the feed flange on stopping. Increase feed flange hub tension by turning the tension knob (figure 34) clockwise. Increase tension only enough to eliminate film spillage.

f. THE TIGHT-WIND OPERATING ANGLE ADJUSTMENT (Figure 8). The take-up unit must be adjusted to such an angle that its guide roller contacts the film close to, or behind the point of tangency. This is the point where the film touches the take-up core when drawn in a straight line from the film motion stabilizer to the top of the core. Loosen the clamping screws so that the entire take-up unit can be rotated to the proper angle; then tighten the clamping screws securely.

g. FILM MOTION STABILIZER ADJUSTMENT (Figure 35). The film motion stabilizers are used to provide the required tension to the lower film loops. This tension can be adjusted by engaging the hook end of the tension spring with any one of five holes in the mounting plate of the stabilizer. The tension should be such that when the threaded film (with taut take-up loop) begins to take-up on AUTO start (low torque), the stabilizer arm will pull away from its rear stop far enough to open the negative film break cut-off switch. With a full 2000 feet of film taken up, the tension must be great enough to prevent the stabilizer arm from contacting the forward stop.

h. NEGATIVE FILM BREAK CUT-OFF SWITCH ADJUSTMENT (Figure 35). This switch is actuated by the film motion negative stabilizer arm and cuts off the power to the printer if the arm springs back

against the rear stop. On starting the printer, the arm may swing back and forth quickly a few times until the take-up becomes stabilized. For this reason, a time delay is incorporated in the cut-off circuit, making it necessary for the switch to be closed for a reasonable period of time before actually shutting off the printer. If the negative should break or the negative supply be depleted, the stabilizer arm will spring back toward the rear stop. The cut-off switch should "click" when the arm is 1/16-inch away from the rear stop. The stop is eccentric and can be adjusted to attain this clearance.

NOTE: If the drive motor should accelerate too fast, film will be fed to the lower loop faster than the take-ups will operate. The cut-off switch then may close long enough to stop the printer. If this situation should occur increase the negative break cut-off switch delay (electrically) or increase the initial torque of the negative take-up motor.

5-12. TAKE-UP TORQUE ADJUSTMENT.

Take-up torque is pre-set at the factory for optimum film take-up results. The film must wind tightly and squarely from empty hub to full reel. If torque is insufficient (the rheostat resistance too high at the start of the wind), the resultant reel of film will have a soft wind and will appear bowed when looking across the face of the film reel. If torque is too great, there may be film breakage at some point between the aperture and take-up hub. Torque adjustment is made as follows: Adjustment of the rotary rheostat take-up torque requires the removal of the rheostat cover (figure 8) to expose the rheostat and gears. With rheostat and gears exposed as shown in figure 36, raise the arm to the up-and-lock position and proceed as follows:

FOR UNITS ASSEMBLED WITH LEFT-HAND SWING: For less resistance at start (greater torque), rotate rheostat gear counterclockwise until the last tooth on the sector is reached. Continue to rotate the rheostat gear counterclockwise, slipping the sector one (or more, if necessary) teeth in its mesh with the gear. Then rotate gear to its clockwise limit.

For greater resistance at start (less torque), rotate rheostat gear counterclockwise until the last tooth on the sector is reached. Lift the sector until it is out-of-mesh with the gear and rotate the gear one (or more, if necessary) teeth in a clockwise direction; then lower the sector into mesh with the gear. Then rotate gear clockwise to its limit.

FOR UNITS ASSEMBLED WITH RIGHT-HAND SWING: For less resistance at start (greater torque). Allow arm to lock in raised position. Rotate rheostat gear clockwise until last tooth of sector is reached. Lift the sector slightly and rotate the gear back counterclockwise under the raised sector, then lower sector into the desired mesh with the gear. Rotate the gear counterclockwise to its limit. For greater resistance at start (less torque). Allow arm to lock in raised position. Rotate rheostat gear clockwise until first

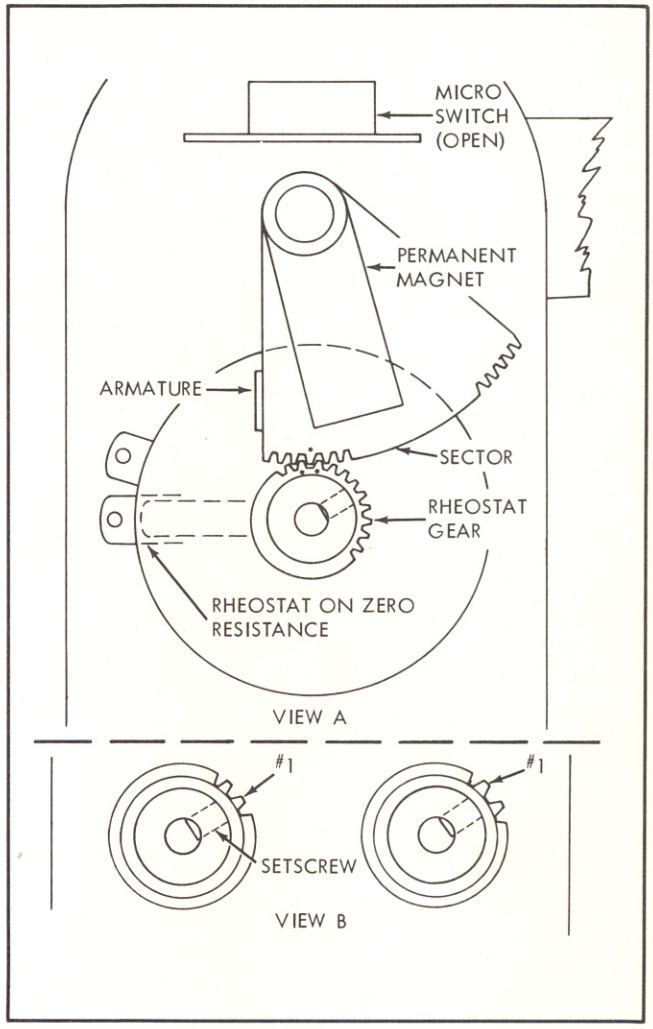

Figure 36. Rotary Rheostat Take-Up Torque Adjustment (Left-Hand Swing Shown From Rear)

tooth on sector is reached. Continue to rotate clockwise, slipping the sector one (or more) teeth in its mesh with the gear. Then rotate gear counterclockwise until the gear has reached its limit.

NOTE: The normal setting, (for left-hand swing assembly) or mesh of sector and gear teeth is as follows: The fourth tooth from the left end of the sector is meshed between the fourth and fifth teeth of the rheostat gear counting counterclockwise from the gear setscrew. View B of figure 36 indicates which tooth shall be considered number 1, depending on whether the tooth is centered above or slightly offset from the setscrew. For right-hand swing assembly (not illustrated - armature on right edge of sector and rheostat mounted approximately 180° opposite) the fourth tooth from right end of sector meshed between fourth and fifth tooth of rheostat gear, counting clockwise from setscrew - see figure 36, view B).

SECTION VI

Replacement and Repair

6-1. LAMP REPLACEMENTS.

a. MAIN PRINTING LAMP. The main printing lamp is a 1200-watt, base-down, 115 to 120 volt lamp with a rating of 10 hours. The lamp requires an external reflector and bears Bell & Howell part no. 307653. To replace the lamp, open the lamphouse door (figure 6) and press ejector lever backward to release lamp; then lift the lamp from its socket. Install new lamp, and adjust as outlined in paragraph 5-8.

CAUTION

Do not attempt to replace the lamp when hot unless fingers are protected by gloves.

b. EDGE NUMBER PRINTING LAMPS. The 16-mm printer has only a single edge number printer, while the 35-mm, 35/32-mm and 70-mm models are equipped with two. The 115-125 VAC lamp is tube-mounted and bears Westinghouse number 6 (Bell & Howell part no. 309547). The tube for inner lamp (all printers) is inserted in a cavity in the bottom of gear case casting and held in place by a spring detent. The tube for outer lamp is secured in a mount on the outside of aperture case by means of a setscrew. This mount must be removed to replace lamp. On 35-mm models, a single setscrew is used to lock mount in place; on all other models, mount is secured with two machine screws.

CAUTION

Before changing the edge printing lamps, switch off the main A-C switch (fig. 5).

c. INSTRUMENT PANEL LAMPS. All instrument panel lamps (Bell & Howell no. 304874) are identical and are accessible by removing the instrument panel cover plate from the vane housing front plate. The panel cover plate is removed by taking off the two rheostat knobs, the 10 amp fuse, and removing the screws from around the edge and bottom center of the plate. Each of the indicator lamp fixtures have a small hinged door which is opened by pressing on the small lug at one side. Pull the lamps from the sockets in the rear of the hinged door.

d. SYNCHRONIZATION LAMP. The synchronization lamp (Bell & Howell part no. 308338) is located within the optical compartment (figure 2). To replace the lamp, swing open the optical compartment door and remove the lamp from its socket.

e. TAPE PUNCH INDICATOR LAMPS. The three tape perforator indicator lamps (Bell & Howell part no. 301659) are accessible by removing eight screws and lifting off the keyboard panel. Unscrew the colored jewel and remove the lamp. This is a G.E. No. 47 lamp, and no substitution is approved.

f. READER INDICATOR LAMP. The neon indicator lamp (Bell & Howell part no. 300409) can be replaced by unscrewing the red jewel at the front of the reader (figure 9).

6-2. FUSE REPLACEMENTS.

a. PRINTING LAMP FUSE. The 10-amp, 250-volt printing lamp fuse is located on the instrument panel (figure 23). Unscrew the fuse cap and replace the fuse (Bell & Howell part no. 308228).

b. PRINTER A.C. FUSE (F101). Located on the control panel, this 10 amp, 250-volt fuse (Bell & Howell part no. 308228) protects all printer A.C. functions.

c. R.F. CUER FUSE (F102). Located on the control panel, this 1 amp, 125 volt fuse (Bell & Howell part no. 301416) is provided for protection of R. F. Cuer.

d. ACCESSORY RECEPTACLE FUSE (F103). This 10 amp, 250-volt fuse (Bell & Howell part no. 308228) is provided to protect accessory equipment that may utilize the outlet. It is located on the control panel.

e. DYNAMIC BRAKE FUSE (F104). This 3 amp, 125-volt, slo-blo, Type 3AG fuse is located on the control panel (figure 5) and bears Bell & Howell part no. 308692. Unscrew fuse cap and replace the fuse.

f. LIGHT VALVE SOLENOID FUSE (F201). The light valve shutter solenoid circuit is protected by a slo-blo fuse on the side of the reader next to cable receptacles. A 3/4-amp fuse (Bell & Howell part no. 308638) is used on Model C Printers, a 1/2-amp fuse (Bell & Howell part no. 302153) in MB printers. Both fuses are slo-blo type.

g. DC POWER SUPPLY FUSE (F301). The DC power supply circuitry is protected by a 3-amp slo-blo Type 3AG fuse (Bell & Howell part no. 308692). Unscrew the fuse cap and replace the fuse.

h. TAPE PUNCH FUSES. The tape punch circuit is protected by a 1 amp fuse (Bell & Howell part no. 301416) and a 2 amp, slo-blo fuse (Bell & Howell part no. 305792). Both fuses are accessible at the sides of tape punch housing. Unscrew fuse caps to replace the fuses.

NOTE: The Model 6170D Tape Punch has a third and fourth fuse mounted inside the punch housing. These 1-1/2 amp fuses (Bell & Howell no. 301352) are accessible by removing the cover from the punch.

6-3. OPTICAL SYSTEM REPLACEMENTS. Refer to figure 16, page 21, for numerical designation of optical components.

a. DICHROIC MIRRORS. The dichroic mirrors are located within the optical compartment (figure 2). Each mirror is held into its frame with two spring clips which are screwed to the frame and separated from the glass by a thin plastic shim. The frames are located by a dowel pin and are secured in place with two screws. Remove the screws and withdraw the frame and mirror from the optical compartment. CAUTION: These mirrors are coated and must be handled with care. Always wear white cotton gloves when handling the mirrors themselves. The coated surface of the mirror faces the mirror frame. The coated surface of the mirror can be detected by observing the reflection of some object on the mirror held at an angle to the eye. The reflection on the coated side will be visible clear to the edges of the mirror; on the clear side, the reflection will be limited by the apparent thickness of the glass. After replacing the mirror within its frame, hold the frame at the approximate angle (45-degrees) of its aligned position and insert the frame locating pin into the dowel pin hole in the back plate of the optical compartment. Install the two screws loosely. Each frame is marked with its position number and neither the mirrors nor the frames should be interchanged (although the No. 1 and No. 4 mirrors only are identical as are the No. 3 and No. 6 mirrors only). Perform optical alignment procedure (see paragraph 5-9 for MB printers or 5-10 for C printers).

CAUTION

Replacement of mirrors will necessitate a realignment of that portion of the optical system affected by the mirror or mirrors replaced. For example, if the No. 2 mirror is replaced, the preparation for realignment (paragraph 5-10) would be required, but it would be necessary only to adjust the new No. 2 mirror to bring the green beam into coincidence with the targets. It would, however, be advisable to recheck the alignment of all three beams.

b. NO. 2 AND NO. 3 CONDENSERS. Two each of these condensers are located within the optical compartment. Each is mounted in a frame with retaining clips and screws. The frames are mounted onto the optical compartment back plate with two screws and are positively located by means of a straight pin. Condenser numbers are marked on the condenser frames, and they must not be interchanged. When replacing condensers, make certain that the curved surfaces face in the proper direction as shown in figure 33B. When reinstalling the condenser frames onto the back plate, it is only necessary to position the frames so that the condensers appear to be at 90 degrees to the light beam.

c. NO. 4-5 CONDENSER ASSEMBLY. These condensers, one spherical and one cylindrical, are cemented together into the barrel. The assembly is secured in the douser frame with two hex head screws. If replaced, it will be necessary to perform the preliminary procedures of optical alignment (para. 5-10) and project the narrow slit beam through this condenser assembly. The barrel then is rotated, until the narrow beam is exactly parallel with the printing aperture and held securely while the hex head screws are tightened.

d. NO. 6 CONDENSER. On 70-mm printers, this condenser is mounted in a removable sliding frame that fits into a grooved track on the inside forward wall of the optical compartment. The frame is locked in place with a thumb screw. On all other printers, the condenser is mounted in a removable slide which is inserted in a slot in the gear case casting (figure 4). If replaced, no alignment adjustment is necessary.

e. NO. 7 CONDENSERS. To gain access to these condensers, the complete aperture jaw assembly must be removed. Refer to paragraph 6-11a, and to Figures 38A and 38B. Remove the outer edge printer from the aperture case cover; 16-mm designs do not have the outer edge printer. Loosen the Allen screws in the upper and lower aperture plates and move each plate away from the jaw about 1/2 inch. Retighten these screws temporarily. Remove the four screws that hold the aperture case cover to the case casting and carefully withdraw the cover straight out. The aperture ring and rotating drum are completely assembled on the cover and are identified as the aperture jaw assembly. The two #7 condensers are held in the aperture jaw assembly with two retaining clips (screw mounted) and are held in position beneath the clips with two expanding springs. When removed and replaced, condensers require no alignment adjustment.

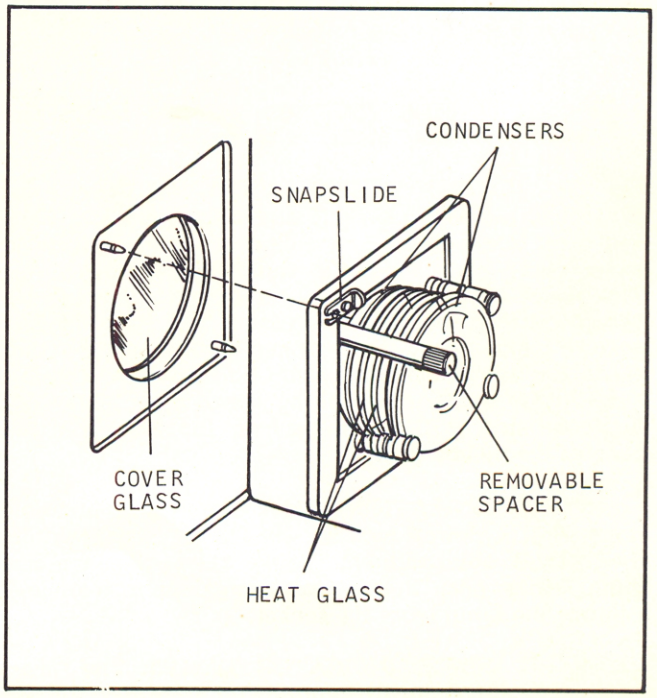

Figure 37. Replacing Lamphouse Optics

Reinstall the aperture jaw assembly by reversing the preceding removal procedure.

Care must be exercised to line up the air tube slot in the jaw with the air tube protruding upward from the bottom of the cavity in the case casting. It will only be necessary to align the mounting holes when re-inserting the assembly into the case to accomplish the air tube alignment. Be sure to reposition the upper and lower aperture plates.

f. LAMPHOUSE OPTICS. The No. 1 condensers, the heat filters, and the cover glass are located within the lamphouse (figure 6). First remove the printing lamp by pressing the lamp ejector lever backward and lifting the lamp from its socket. Unlock the two snap slide fasteners (figure 37) and lift out the complete frame assembly. To free the cover glass from the wall of the lamphouse, remove the large retaining ring.

6-4. BLOWER MOTOR REPLACEMENT (Lamphouse).

a. REMOVAL. Disconnect the blower motor wiring and remove the four screws and the front intake cover. Loosen the blower wheel setscrews and remove the blower wheel. Remove the motor mounting screws and separate the motor from the blower housing.

b. INSTALLATION. Install the blower motor by reversing the removal instructions. When installing the blower wheel, center the wheel within the housing while tightening the setscrews.

6-5. TAKE-UP MOTOR REPLACEMENT.

To replace either take-up motor (figure 8) disconnect motor wiring, marking each wire to facilitate rewiring, and remove four Allen head capscrews that secure the motor to its mounting plate. Carefully lift the motor free of its mounting.

6-6. TIGHT WIND TAKE-UP REPAIR.

In addition to the specified lubrication (paragraph 5-4), the rotary rheostat type of tight-wind may require occasional belt replacement. To gain access to the belt, proceed as follows: Loosen two Allen screws on the side of the large clamp-like casting at the rear of the tight-wind assembly (figure 8) and withdraw the entire motor and belt drive case from the hanger. Remove the rheostat cover; which is held by two screws. Loosen the hub setscrews and withdraw the hub. Remove four screws and lift off the belt drive case with rheostat and guide roller lever installed. This will expose the pulleys and drive belt. Remove the retaining ring from the rear of the hub shaft and withdraw the shaft about one inch so that the belt can be slipped from position. After new belt is slipped in place, press hub shaft back and reinstall the retaining ring. Reassemble by reversing the disassembly procedure. After the tight wind assembly has been reinstalled, it may be necessary to realign the hub with the film path (paragraph 5-11, step b).

6-7. DRIVE MOTOR REPLACEMENT.

a. REMOVAL. Remove the speed selector switch mounting nut and lock washer. Remove or loosen the belt drive cover screws and lift off the cover. Remove the setscrew that secures the knurled knob to the motor shaft and remove the knob. Remove the four motor mounting screws and lift off the motor while separating it from the drive belt.

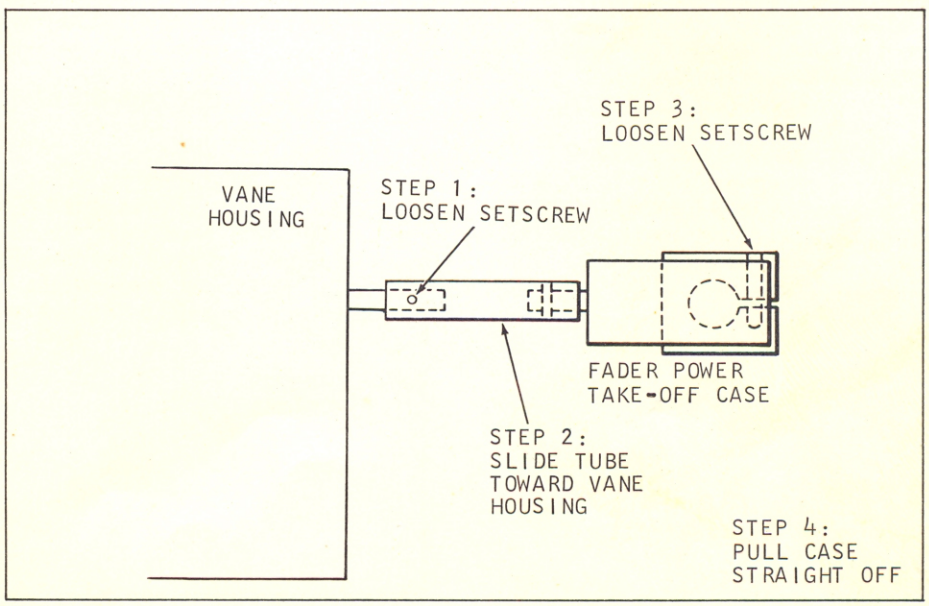

Figure 38. Fader Power Take-Off Removal

b. INSTALLATION. Place the motor on the base plate and position the belt over the pulley. Install and tighten the motor mounting screws while aligning the motor to obtain proper belt travel over the pulleys. Reinstall the belt drive cover and the knurled knob.

6-8. BELT DRIVE ASSEMBLY REPAIR.

a. REPAIR AND PARTS REPLACEMENT. The belt drive parts are exposed by removing the cover as outlined in paragraph 6-7, a. Belt replacement requires only that tension roller adjusting screw lock nut be loosened and the adjusting screw be backed away from the tension roller arm. Install the new belt over the appropriate pulleys and adjust the tension roller for proper belt tension by turning the adjusting setscrew clockwise. Lock the nut, and reinstall the belt drive cover. Belt tension should be adjusted as shown in figure 38-C.

b. REMOVAL. To remove belt drive assembly from the gear case, disconnect the motor cable at J103, and belt drive cable at J105 on the control panel. Loosen the large setscrew at the top of the picture head gear case casting and pull the assembly straight away from the gear case until the couplings have disengaged.

c. INSTALLATION. Lift the belt drive assembly into position, aligning the studs on the belt drive coupling with the holes in the gear case stycast disc as the assembly is pushed against the gear case. When the couplings are engaged and the assembly is tight against the gear case, position the belt drive assembly to rest on the pedestal top casting as shown in figure 13. Securely tighten the large setscrew in the gear case and reconnect the cables.

6-9. FADER POWER TAKE-OFF REPAIR.

Figure 38 (page 71) illustrates the procedure for removing the power take-off and its shafts.

6-10. FILM TRANSPORT GEAR CASE REPAIR.

a. To expose the gear case gears for inspection and lubrication, remove the belt drive (paragraph 6-8) and the fader power take-off (paragraph 6-9). Then remove gear case cover screws and lift off the cover. See "Annual Lubrication," page 56.

NOTE: When a printer is equipped with a soundhead attachment, lubrication of the printer gear case gears is accomplished through soundhead back cover.

b. For roller gate removal, refer to figure 31 on page 60.

6-11. LIGHT VALVE REPLACEMENT.

a. Remove the ten cover screws, and the three large light valve anchor screws and remove the vane housing rear plate to expose the vane housing components (figure 7), see paragraph 6-11D, page 72E. Disengage the cables from the light valve disconnects.

b. Support the light valve assembly with one hand while removing the two hex head screws that fasten it in place. A 5/16-inch socket wrench with a 10-inch handle is supplied with the printer for this purpose. The valve assembly supports itself in the mounting hole for only 1/2-inch; therefore, extreme care must be exercised when drawing the light valve out of the housing. The shutter section must not contact the edge of the large hole in the mounting plate. Refer to paragraph 5-4 for lubrication instructions.

c. Replacement light valves are shipped in a two-section styrafoam container with a plastic cap over the shutters and the entire valve encased in a plastic envelope. The two styrafoam sections are held together in a heavy cardboard container. Faulty light valves should be packed in this same manner and returned to Bell & Howell. Professional Equipment Div. Field Service Department. The original indicator discs must be installed on the replacement valves. When installing the indicator disc, turn the trimmer shaft to its extreme counterclockwise limit and install the disc with the number "1" straight up (after the valve is installed in the printer).

6-11A. APERTURE JAW DISASSEMBLY.

Procedures governing the removal of aperture jaw assembly for access to the #7 optical components to the rotating drum bearings, to the aperture ring and aperture selector mechanism and for correctly adjusting the above components on reassembly are outlined in paragraph 6-3,e and on Figure 38A.

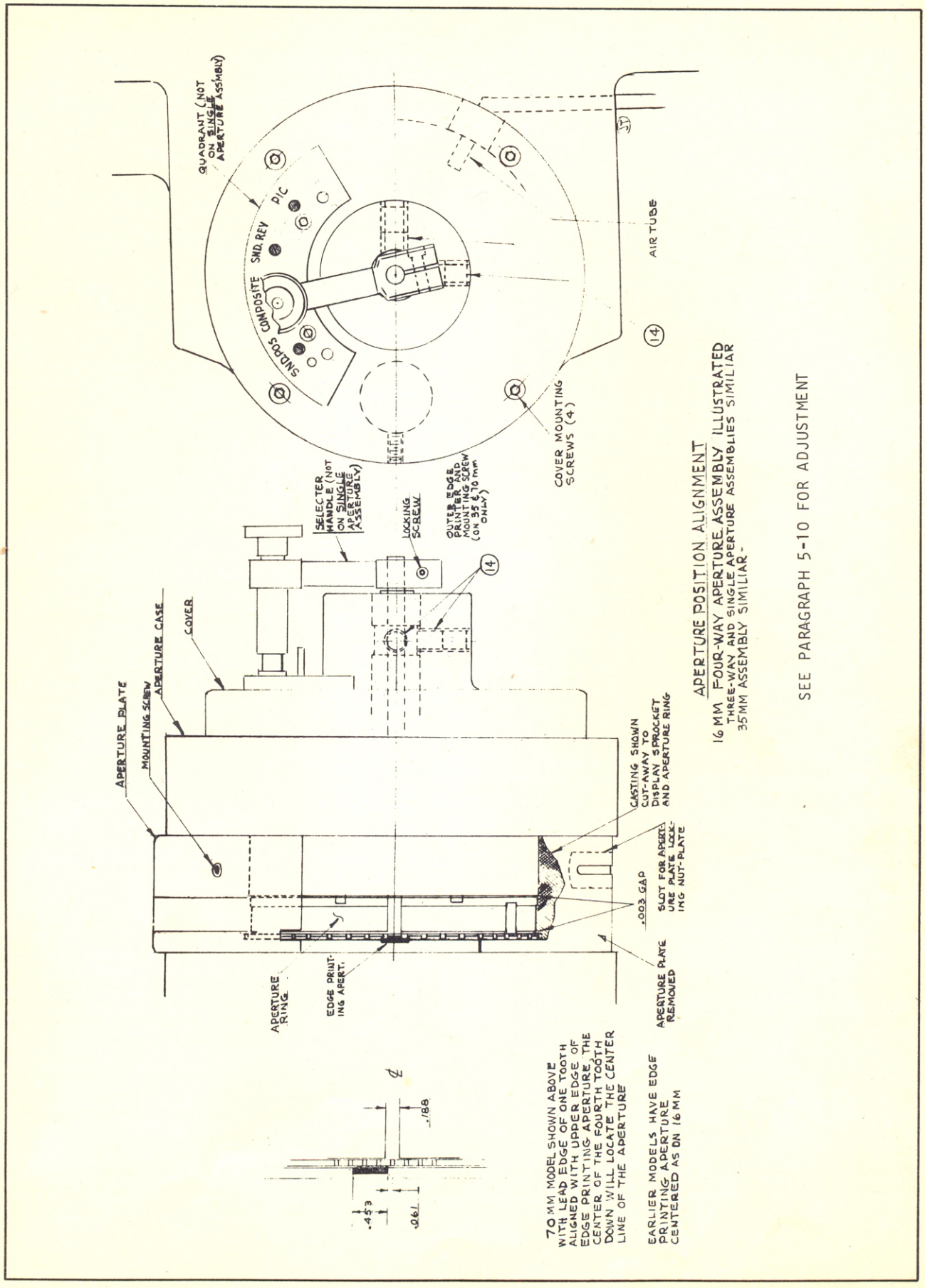

Figure 38A. Aperture Jaw Disassembly

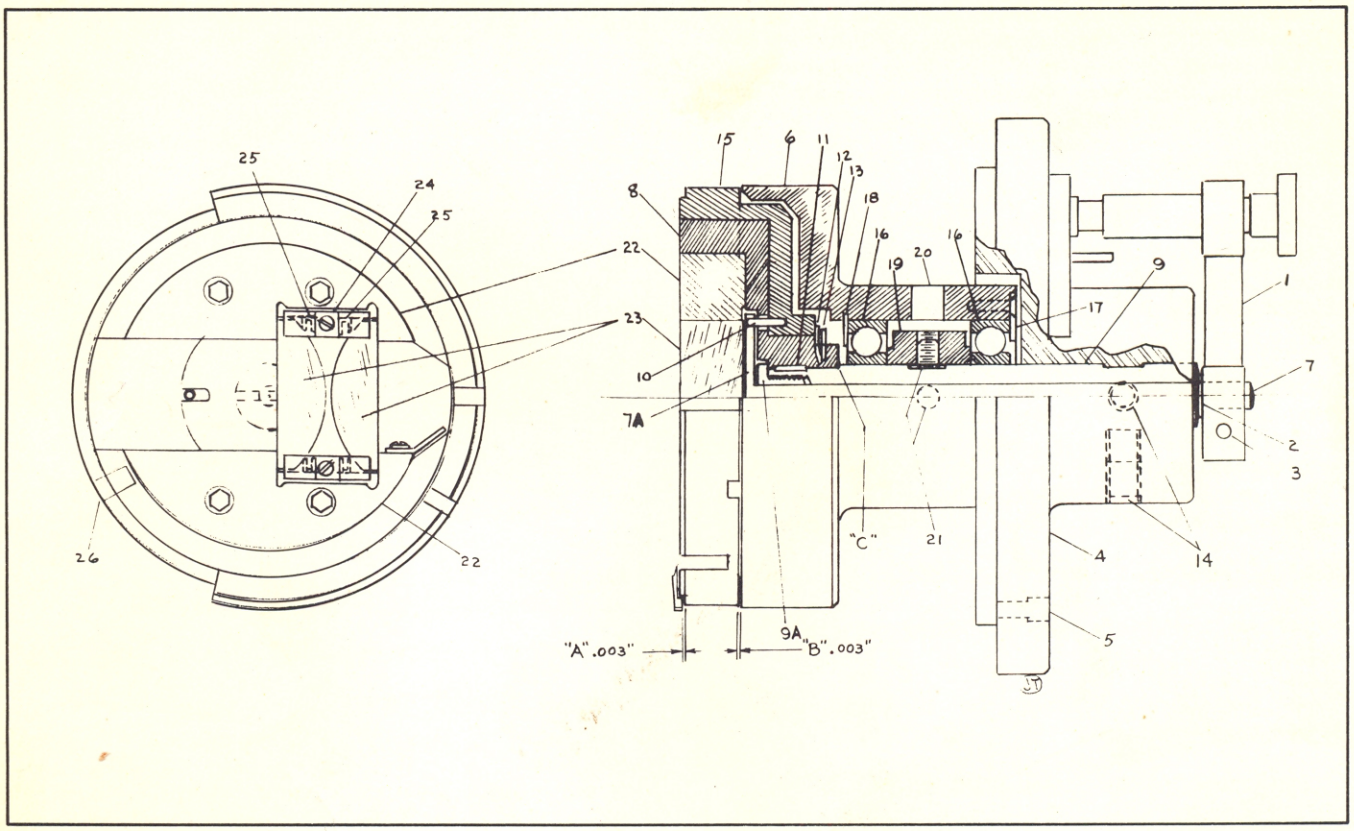

1. Selector handle
2. Tru-Arc retaining ring
3. Locking screw - locks (1) to (7)
4. Aperture case cover
5. Mounting screw holes (four)
6. Rotating drum
7. Selector shaft

7A. Drum end of selector shaft

8. Shade
9. Main shaft

9A. Shade retaining screw

10. Dowel pin
11. Key
12. Bowed spring ring
13. Tru-Arc retaining ring
14. Shaft locking setscrews (two), each topped with cover screws
15. Aperture ring
16. Ball bearings (two)
17. Bearing retaining plate
18. Bearing Tru-Arc retaining ring
19. Bearing spacer
20. Access hole for (21)
21. Drum assembly locking setscrews (two)
22. Condenser seat
23. Condensers No. 7
24. Retaining clips (two)
25. Expanding springs (four)
26. Air tube slot

NOTE: On single aperture assemblies, the aperture ring and shade are made of one piece and the adjustable aperture parts are therefore also eliminated.

Figure 38B. Aperture Jaw Assembly Shown Removed from Case for Access to #7 Condensers and Rotating Drum Bearings

6-11B. PRINTING APERTURES.

Apertures on all 16-, 35- and 70-mm designs are 0.188-inch in height. The 16-mm design is currently furnished with a single picture aperture and utilizes a rotating drum (free rolling shoulder) to support the film under the entire sound track area.

A four-way 16-mm aperture assembly is also furnished as a choice. This consists of a single picture aperture, one REV and one POS track aperture and one composite picture and track aperture. The rotating drum on this style necessarily only supports the film under approximately 0.012-inch of the outside edge.

The three-way 16-mm aperture (now discontinued) provided a REV picture, a POS picture and one track aperture. These picture apertures were 0.157-inch in height. Some four-way apertures were also 0.157-inch.

The 35-mm design incorporates two picture and two track apertures, arranged to allow picture and sound to be printed from head or tail, plus a composite aperture.

The 70-mm designs each incorporate a single aperture of a width to be compatible with the particular type of 70-mm film for which the printer was designed.

The 16-mm four-way aperture assembly is shown in Figure 38B. The 35-mm assembly is similar as are the 16-mm single aperture and 70-mm assemblies; however, the latter two assemblies do not incorporate the radial setting facility for apertures.

ADJUSTMENTS.

ADJUSTMENT "A" (Figure 38B). Gap between the sprocket and aperture ring is adjusted by in-out location of shaft (9) and locked by two setscrews (14). Also affects the radial position alignment (see Figure 38A).

ADJUSTMENT "B" (Figure 38B). Gap between rotating drum (6) and aperture ring (15) is adjusted by location of drum (with two bearings previously fitted and retained) on shaft (9) and locked by two setscrews (21) in spacer (19), accessible through (20). This fit is accomplished with aperture assembly removed.

SPECIAL ASSEMBLY INSTRUCTIONS.

(a) Shade (8) butts against shoulder of shaft (9) at point "C."

(b) Tru-Arc (2) retains shaft (7) inside of shaft (9) with slight end play.

(c) Screw (9A) locks shade (8) to shaft (9).

(d) Pin (10) fastened in aperture ring (15) enters slot in (7a), through access in shade (8).

(e) Key (11) locks shade to shaft (9) to maintain orientation between shade aperture and apertures in ring (15).

(f) Tru-Arc (13) and bowed spring ring (12) retain aperture ring (15) snugly against shade (8).

(g) Bearings (16) are retained by Tru-Arc (18) and plate (17), both of which bear on the outer races. Inner races are retained by spacer (19) which is machined to fit each individual assembly. If bearings are removed for inspection, they must be replaced facing the same way as originally installed. If new bearings are to be installed, they must be precisely fitted and either the spacer (19) would probably require machining, or a shim would be inserted between the spacer (19) and a bearing inner race.

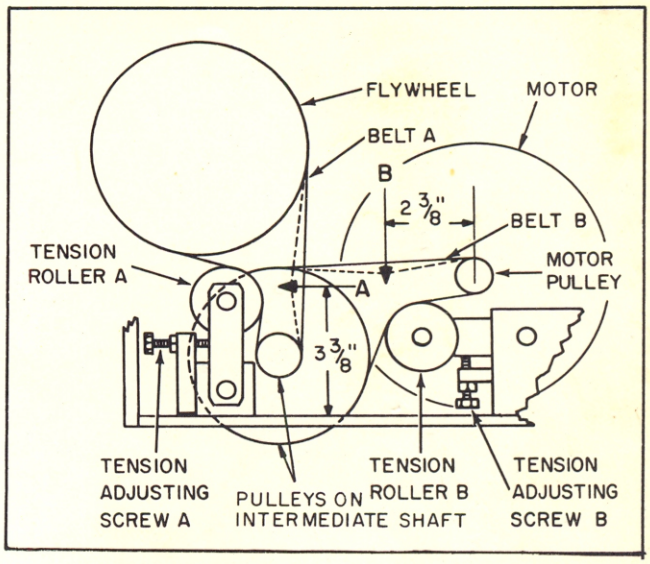

Figure 38C. Belt Drive Assembly - Viewed Facing the Back of Printer with Motor in Phantom

6-11C. BELT TENSION ADJUSTMENTS (Figure 38C).

White (or Gray) Belts.

a. Adjusting Belt "A." Engage a Chatillon spring scale to belt "A" at the point where arrow "A" crosses the belt. Apply force in direction of arrow "A" until belt "A" is deflected 5/16-inch. A force of 1-1/2 pounds should be required to accomplish this deflection. If belt should be too loose or too tight, loosen the lock nut on adjusting screw "A" and adjust the screw to obtain the proper belt tension; then tighten lock nut.

b. Adjusting Belt "B." Proceed in the same manner as described for belt "A," above except that spring scale engage belt at arrow "B" and adjustment screw "B" is used to adjust the tension of the belt.

NOTE: The above tension figure of 1-1/2 pounds is for use with white belts. A black belt of heavier material has been in use since April, 1966. This belt should be adjusted to a tension of three pounds. If the black belt is used as a replacement on printers originally equipped with white belts, the speed of operation will be increased to approximately 186 fpm, unless the small pulley (1.275-inch OD at the crown) on the intermediate shaft is replaced with a pulley of 1.230-inch OD. This replacement pulley is Bell & Howell part no. 310398 and is for 60 cycle units.

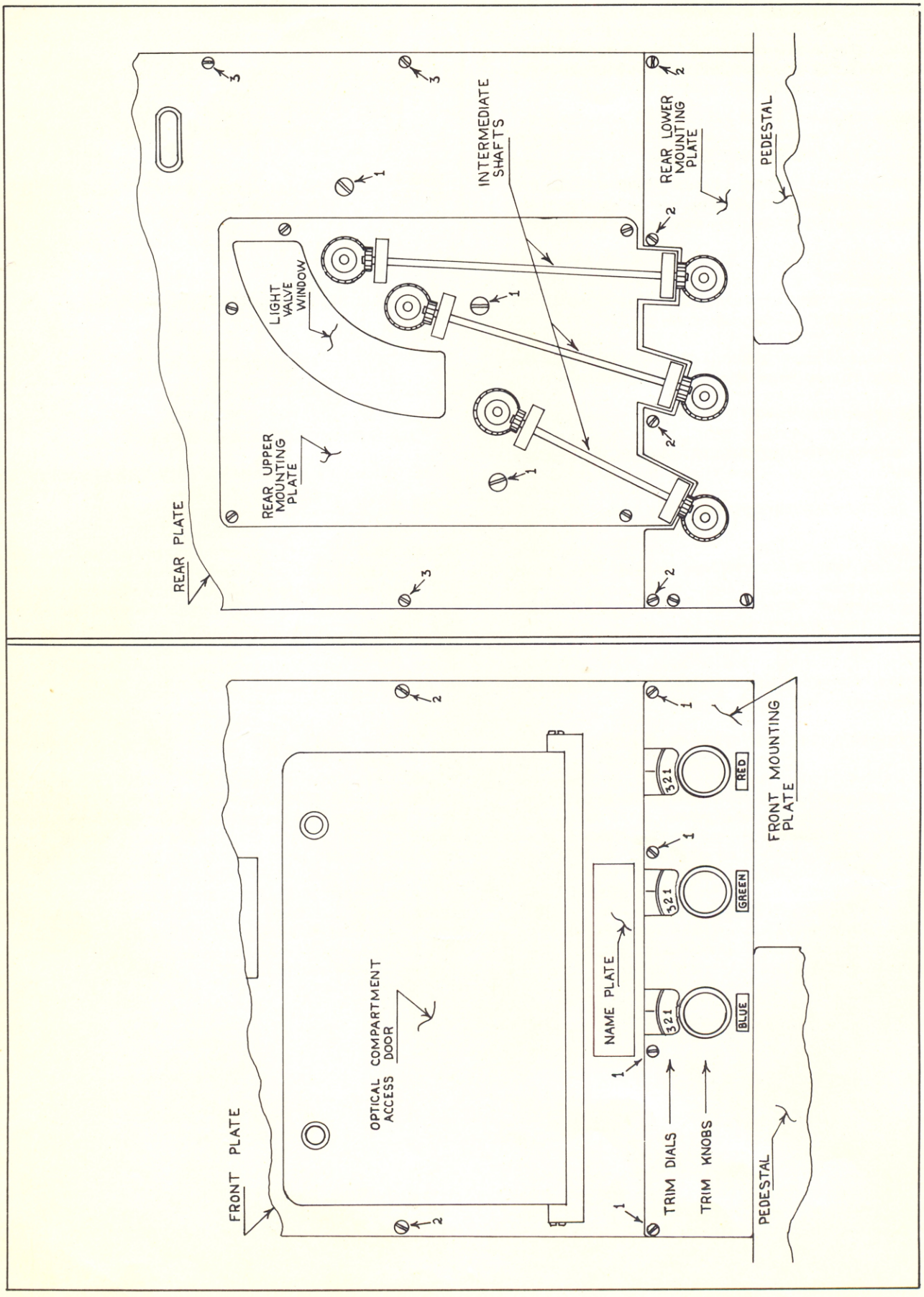

Figure 38D. Front View of Vane Housing
Showing Remote Trim Controls

Figure 38E. Rear View of Vane Housing
Showing Remote Trim Controls

6-11D. FRONT TRIMMER CONTROLS.

REMOVAL OF VANE HOUSING REAR OR FRONT PLATE (REMOTE TRIM CONTROLS MOUNTED ON MODEL C).

To gain access to the inside of vane housing, proceed as follows for removal and reinstallation of the REAR PLATE or the FRONT PLATE.

NOTE: Although these procedures are prescribed for the trim controls on the Model C, the same procedures can be altered to be effective on the Model MB.

a. REMOVAL OF REAR PLATE. (See Figures 38D and 38E, page 72D).

(1) Set the TRIM DIALS on the FRONT MOUNTING PLATE to indicate trim #1.

(2) Remove three screws (1), that support the light valves, from the REAR PLATE.

(3) Remove four screws (2), from the top edge of the REAR LOWER MOUNTING PLATE. This will allow the MOUNTING PLATE to be moved down slightly, disengaging the gears on the MOUNTING PLATE from the bottom gears on the INTERMEDIATE SHAFTS.

(4) Remove eight screws (3), from the outer edge of the REAR PLATE and remove the REAR PLATE by pulling outward and upward at the same time. This will free the top gears on the INTERMEDIATE SHAFTS from the gears on the light valves.

NOTE: The REAR UPPER MOUNTING PLATE remains fastened to the REAR PLATE.

b. REINSTALLATION OF THE REAR PLATE.

(1) Ascertain that the light valve trim gears are positioned at trim #1. (Gear on light valve rotated fully counterclockwise.)

(2) Check the TRIM DIALS on the FRONT MOUNTING PLATE to be sure they are set at trim #1.

(3) Carefully position the REAR PLATE on the vane housing, allowing the top gears on the INTERMEDIATE SHAFTS to slip into mesh with the gears on the light valves. Install the eight screws (3).

(4) Lift the REAR LOWER MOUNTING PLATE and carefully allow the gears on the MOUNTING PLATE to mesh with the bottom gears on the INTERMEDIATE SHAFTS. Install the four screws (2).

(5) Install the three light valve screws (1).

(6) Manipulate each of the three TRIM KNOBS through the entire range to make certain they will reach the stop limits at trim #24 and at trim #1.

c. REMOVAL OF THE FRONT PLATE.

(1) Remove the four screws (1), from the FRONT MOUNTING PLATE and allow the MOUNTING PLATE to be moved down slightly.

(2) Remove seven screws (2) from the edge of the FRONT PLATE and remove the FRONT PLATE by pulling outward and upward at the same time. Note that the FRONT PLATE must be pulled out far enough to allow two electrical plug connectors to disengage.

d. REINSTALLING THE FRONT PLATE.

(1) Carefully place the FRONT PLATE on the vane housing and insert the seven retaining screws (2).

(2) Lift the FRONT MOUNTING PLATE to align the screw holes and install the four screws (1).

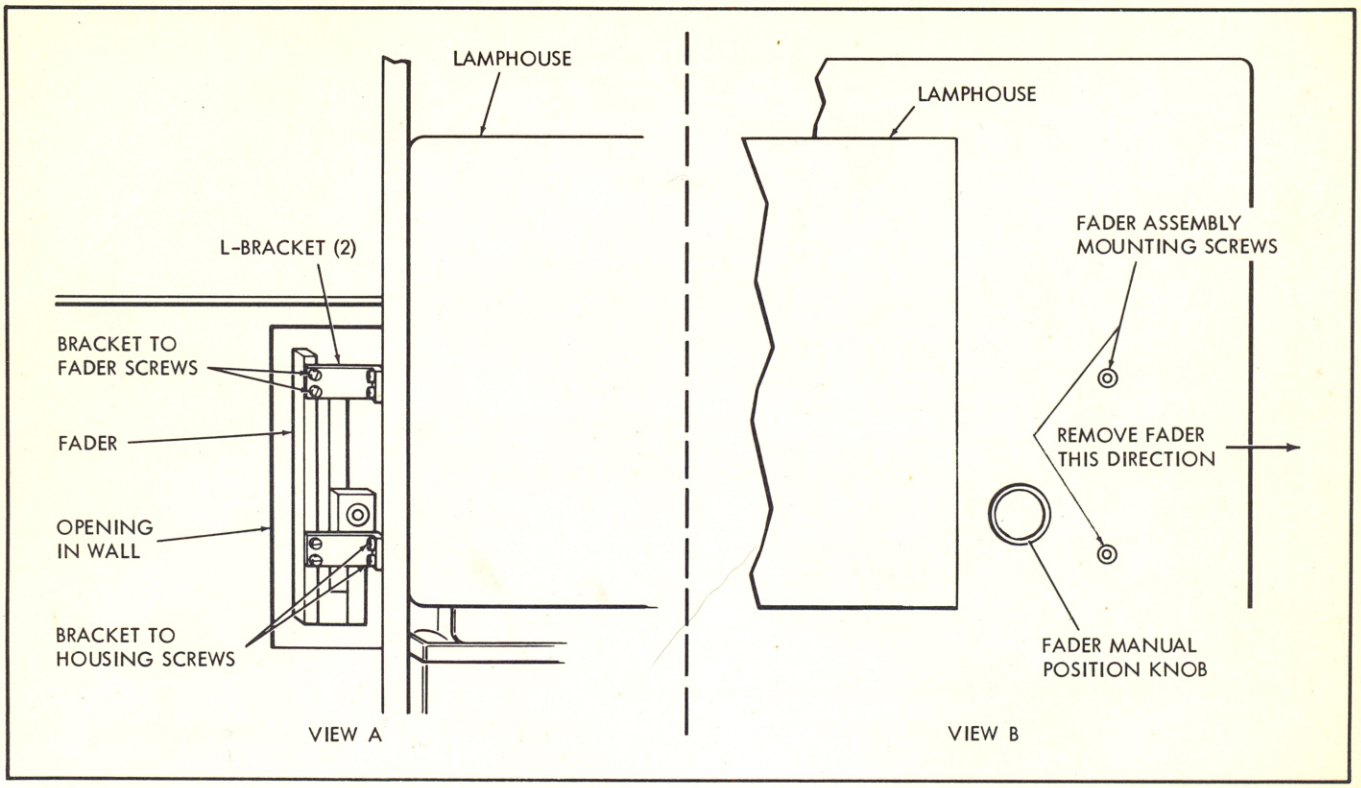

Figure 39. Fader Assembly Removal

6-12. FADER ASSEMBLY REPAIR.

a. Remove the vane housing rear plate as instructed in paragraph 6-11D, page 72E. Loosen the setscrews in the fader drive coupling and slide the coupling to the right so that the fader drive shaft is free. Position the fader in the "open" position by using the manual knob. This will cause the spring loaded fader shutter operating bars to be in contracted condition, making it easier to withdraw the fader from the vane housing.

b. Open the optical compartment door to expose the fader mounting screws shown in view A of figure 39. Remove the four screws that attach the two "L" brackets to the wall of the optical compartment.

c. Disconnect the fader and red and green light valve electrical disconnects, and remove the red and green light valves as instructed in paragraph 6-11.

d. While supporting the fader assembly with one hand, from rear of vane housing, remove the two Allen screws shown in view B of figure 39. Withdraw the fader assembly straight out from the vane housing being careful not to drag the shutter frame against the edge of the cut-out in the mounting plate. When placing the assembly on the work bench, do not permit the shutter frame to support the weight of the assembly. Refer to paragraph 5-4 for lubrication instructions.

e. Reinstall the fader assembly by reversing the removal procedure. In reassembly, all eight screws shown in view A of figure 39 are loosened until the four screws in view B are tightened securely. Then the eight screws are tightened. When re-coupling the fader drive shafts (figure 38), be sure to take up all end play toward the power take-off case before tightening the coupling setscrews.

6-13. ELECTRICAL REPAIRS (READER). To facilitate repair of an electrical item, it is essential to understand the theory of its operation.

Except for the possible resoldering of terminal connections, the replacing of worn or broken wiring or of such uncomplicated circuit elements as lamps, fuses, switches and so forth, electrical repairs should be performed only by competent electronics maintenance personnel. The following paragraphs (6-14 through 6-23) deal primarily with reader functions. The circuitry involved in each printer function, from signal initiation to completion, is discussed in 6-24 and subsequent paragraphs. Major component schematic diagrams will be found in the "Drawings" section at the rear of this manual.

Because of its intricate cam-switching arrangements and relay circuitry, cam switch settings and relay functions have been covered in detail in the following paragraphs. It is recommended that the repairman become thoroughly familiar with this data before attempting reader repairs.

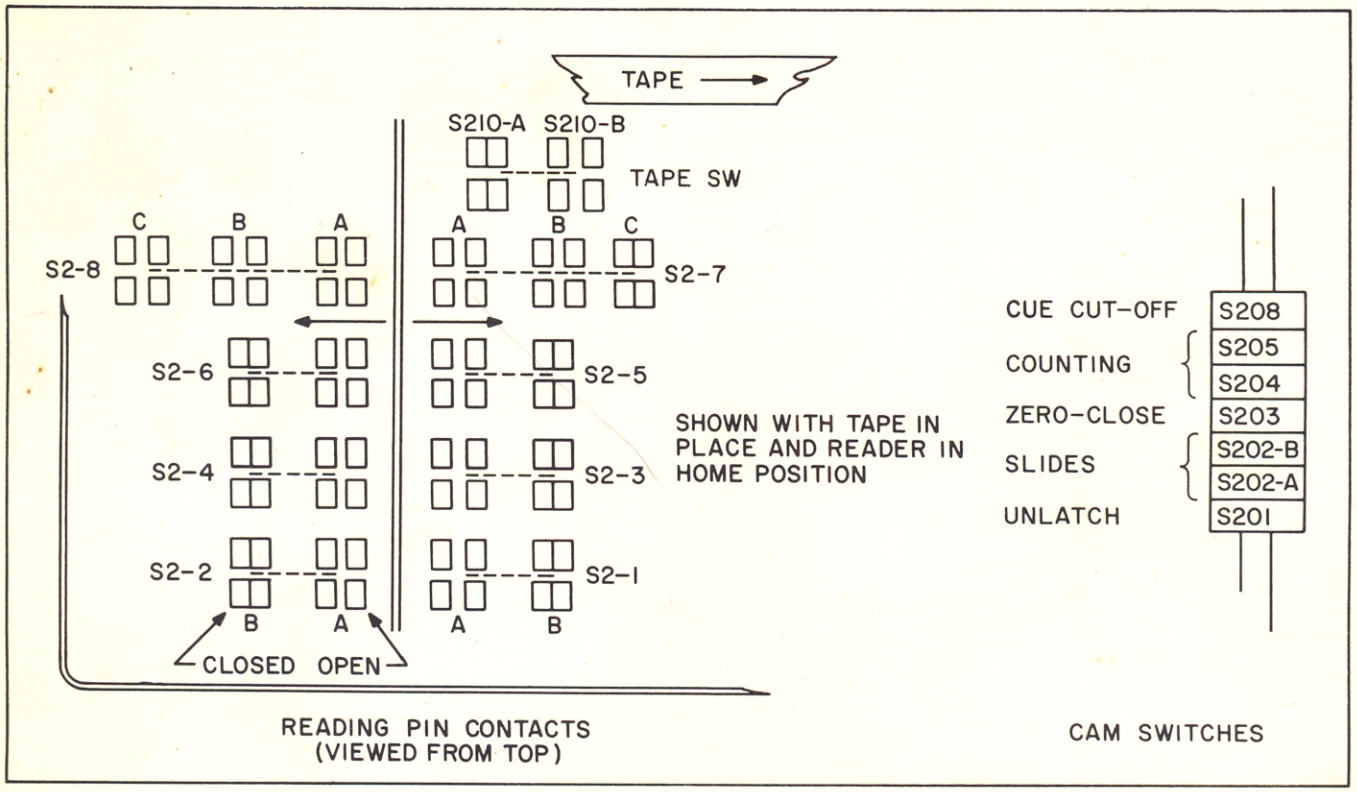

Figure 40. Tape Reader Pin Contacts and Switches

6-14. READER CAM SWITCH SETTINGS. (Refer to Cam Switch Setting Chart, Page 75.)

The program tape reader includes seven cam operated switches to provide the accurate timing required for signal decoding, sequencing and cycle counting. These cams are preset at the factory for optimum results and should require no further adjustment. The following information is included primarily for trouble shooting purposes and can be used to verify tape reader operation. In all instances, the timing is indicated in terms of degrees of rotation made by the reader shaft from the "home" position (the point at which the clutch is disengaged). Readings are taken with a two-inch diameter dial graduated in 10° increments up to 360°. The dial is fastened to the reader cam shaft at the opposite end from the clutch with a No. 3-48 screw, and is set to read zero at the "home" position of the shaft. To eliminate false readings, disconnect the reader or the red light valve cable. For further information on the use of this dial, refer to Section VIII of this manual.

a. UNLATCH SWITCH (S201). This switch operates the unlatching solenoid on the light valve to erase any previous information from "memory." Theoretically this can happen at the very beginning of the cycle. However, this normally would mean that every time a slide is to be used several times in a row, it would snap back and be reset to its full stroke. To avoid this noisy and material wearing action, the unlatch solenoid is energized just shortly before the slide solenoids are pulsed, and the pulse to the unlatch solenoid is extended into the slide solenoid pulse. However, the end of the unlatching pulse must occur in time to allow the latch lever to recover and to allow the slides sufficient time to latch-in securely if their solenoids are energized. Therefore, the unlatch switch is set to make at 80° and break at 150°.

b. READOUT AND SLIDE SWITCH S202-A AND S202-B (Hereafter written S202-A/B) (A series combination). To provide the system with information, the reader constantly scans the tape for holes or no holes. This reading starts at 50° and ends at about 230°. When closed, the reading contacts energize one or several of relays K2-RA, K2-RB, K2-RC, K2-RD, K2-RE, K2-RF, depending on tape information in channels #1 to #6 respectively. These relays, when energized, open up N.C. contacts in the B+ circuit to the corresponding slide solenoids, thus preventing them from being energized when cam switch S202-A/B closes. The relay contacts are too small to break the current of the highly inductive slide solenoid coils; therefore, the switching of the slide solenoids is done by the heavier reader cam switches. To protect the relay contacts, they must be open before the slide solenoid cam switch combination S202-A/B closes and applies current to the solenoid coils. Considering the time the relays K2-RA to RF need to become energized and open up their respective contacts, the closing moment of S202-A/B is set at 90°. These contacts must open before relays K2-RA to K2-RF fall back into their closed contact position and, in any case, before relays K2-D and K2-J (color sequencing relays)

switch over to the next color. Contacts of relays K2-D and K2-J are in the slide solenoid circuit. S202-A and S202-B have the same cam configuration of 205° "making" time. However, since they are wired in series, the earlier switch (S202-B) is set to make at 15° and break at 220°; the later switch (S202-A) to make at 90° and break at 295°. The circuit then makes at 90° and breaks at 220°.

c. ZERO-CLOSE SWITCH (S203). Switch S203 must be set in such a way that enough time will be available to energize and latch the zero-close solenoid of the light valve. However, the making point must not be too early, otherwise the relay K2-RG (which stays energized all the time except when color information is read-out) would have to break the high inductive load of the zero-close solenoid. For this reason, the zero light cam has been set to make at 110°. Being in series with S202-B, the zero-close circuit will be cut off by S202-B at 220°.

d. COUNTING CIRCUIT SWITCHES (S204 and S205 or S204/5). These switches, wired in series, provide the right timing for the transfer of the color and fader information and for the exact duration of the cycle. Therefore, they must operate only after the reading cycle is over. Their "on" time must be long enough to provide enough pulse length for their function, but they should not interfere with the read-out operation and should be in the "off" position when the cycle is over. Switch S204 is set to make at 260° and switch S205 is set to break at 350°.

e. SHUTTER SOLENOID CUT-OFF OF CUE CIRCUIT (S208). Since this cam switch is to be closed at the start of the cycle and must break the circuit to the vane solenoids after sufficient energy time, it is set to break at 120° and make at 350°.

f. CHECKING PRECAUTIONS. When checking out the switching responses, the following rules should be noted and observed. A condensed chart at the end of this paragraph indicates the make and break times for switches as well as the terminals where continuity measurements are to be made.

(1) Slide circuit should make after reader pin contacts close; otherwise the contacts of relays K2-RA to K2-RF will arc.

(2) Slide circuit must break before reader pin contacts open or arcing will occur on contacts of relays K2-RA to K2-RF and slide solenoids not in use will be pulsed.

(3) Counting circuit should make after slide circuit breaks or arcing will occur on contacts of K2-D and K2-J relays.

(4) Counting circuit must break before revolution ends.

(5) Unlatch circuit can either make at the same time or earlier than slide circuit.

(6) Unlatch circuit must break well before slide circuit breaks.

(7) Zero-close should make and break while reader pin contacts are in their operating cycle (50° to 230°).

READER CAM SWITCH SETTING CHART

Switch	Switch Settings		Terminals (See Note A)
	Make	Break	
S201	80°	150°	9 - 10
S202-A/B	90°	220°	8 - 10
S203	110°	220°	7 - 10
S204/5	260°	350°	11 - 13
S208	350°	120°	(See Note B)

NOTE A: Check continuity between these terminals on TB202.
NOTE B: Check continuity between terminal 7 on relay K2-U and terminal 10 on TB205.
NOTE C: Reading pin contacts close at 50° and open at 230°.

6-15. READER RELAY OPERATION.

Functions of reader relays, switches, etc., in circuits involved in tape operation are discussed in the following paragraphs (through page 84) and may be readily traced in the assembled group of printer schematics furnished in Section IX. Electrical symbols and component designations, as well as the system of block numbers for identifying the location of the various components (by subassembly: Reader, Control Panel, etc.) are explained in charts furnished in paragraph 6-24. If the periodic check (paragraph 5-5) should indicate trouble in a particular reader relay circuit, review the paragraph on that circuit as well as the relay function-failure chart, pages 81 through 84, to isolate the trouble to a specific relay or its associated components.

To simplify the copy in this section, relays of the Reader only, will be referred to by the letter or number and letter, less the designation "K2-," ie: K-2A, K2-3J, K2-RA, etc., will be referred to as: A, 3J, RA, etc. For the same reason, reader relay contacts will be referred to as: A 7/11, 3J 2/10, RA 4/12, rather than as: K2-A 7/11, K2-3J 2/10, K2-RA 4/12. However, on all schematics the full designation will appear, the contact numbers appearing adjacent to leadwires. Relays of all other assemblies will be referred to in this copy by the full designation. It is important that personnel concerned with maintenance of the printer become familiar with the electrical component numbering and designation system, which is outlined in charts in paragraph 6-24.

The reader has 34 relays, all identical and interchangeable with each other and with relays in the fader, the tape punch, and some in the checker-duplicator. Reader relays fall into five separate operating groups, or circuits, as follows:

(1) The Start-Stop circuit, with relays G and F utilized in the Start action and relay H utilized in the Stop action. Contacts of relays B, N, and U are also used.

(2) The Cue circuit utulizing relays V, W and A. (The automatic first cue circuit utilizes relays L and P, and the cue delay 60 fpm circuit, relays Q and M.) Contacts of relays S and U are also used.

(3) The Counting circuit utilizing relays A, B, S, T, D, E, J, N and C. (D and J consist of 1D, 2D, 3D, 1J, 2J and 3J.)

(4) The Reading circuit utilizing light information relays RA to RF; light information sequencing relays 1D, 2D, 1J, 2J; unlatch and fade information sequencing relays 3D, 3J; zero-close relays RG, E, N. In many cases relays act in two capacities, such as the D, J, E and N relays which are basically in the counting circuit but contacts of which act as sequencing facilities.

(5) The Safety circuits utilizing relays Z, R, U and contacts of RG and T. Relays K1506, K1507 in Control Panel are also in the safety group.

6-16. START AND STOP CIRCUITS.

This group consists of relays F, G and H. Start and stop in normal printing operation are signaled by #8 hole in the tape. Contacts S2-8B apply B+ through F 9/1 to relay G which becomes energized. Relay F will be energized through G 9/5 but not before the start pulse from S2-8B is ended because, as long as S2-8B is closed, points 13 and 14 on the coil of relay F are at the same B+ potential. Only after B+ is removed from point 13 of relay F by S2-8B contacts opening can relay F be energized. Relays F and G, being in series, then lock into B+ through G 9/5 and H 10/2 thus preparing relay H (by transfer of F 9/5) to receive the next #8 pulse. This next #8 pulse will energize relay H through F 9/5 and open up H 10/2, which then, of course, will cause relays G and F to be de-energized. Diode CR209 holds Relay G in for a period of time after it has been de-energized by the opening of H 10/2 (at the END hole signal). This is to prevent arcing of G contacts, which would occur if relay G was allowed to drop out (in the 4th rotation) during the time that its contacts were furnishing B+ to light valve slide solenoids on the 4th rotation zero-close signal.

a. STARTING ACTION. Relays G and F, when energized by the first #8 (start) pulse, will initiate printer operation as follows:

(1) G 3/11 opens the circuit to AUTO button in the push button panel, thus preventing the tape from advancing further if AUTO button is held depressed.

NOTE: In references to contacts G 3/11 or G 11/7, G 12/8 and G 4/12 are also referenced, both being in parallel.

(2) When G is energized, G 11/7 and G 12/8 (in parallel) provide B+ to several circuits in the reader. These lines will be called (B+ after "G") in the following paragraphs. (B+ or DC+ after K2-G on schematics.)

(3) G 11/7 provides B+ to the control panel to energize K1502 relay which starts the printer drive and take-up motors. G 11/7 also energizes the douser L2 thru J202-i. The douser is initially energized by the capacitor C701 discharging through the douser coil. It then remains energized through the dropping resistor R702, in the negative leg which returns to the reader through J701-h.

(4) G 6/10, F 6/10 and F 7/11 (in parallel) prepare B+ line for cam switches S201, S202-A/B and S203.

(5) F 4/12 opens X relay circuit (to be described later). The type of circuit used for G and F relays will be found again in counting circuit. Two relays are required, one being energized at beginning of pulse, one with ending of pulse, to avoid feed back and continuous oscillation of relay groups.

b. STOPPING ACTION. The second #8 pulse energizes relay H through F 9/5. H 10/2 opening de-energizes relays G and F. G11/7 then opens the circuit to K1502 relay in the control panel which then stops printer and take-up motors.

6-17. CUE CIRCUIT.

NOTE: The notch cue switch and RF probe are adjusted for a position which will cause the light change to be made on the frame line, generally at 180 fpm. This adjustment will be accurate only for the reader-printer combination initially adjusted. Any interchange of readers will necessitate a check to be made on film and a probable readjustment of cue switch and probe positions.

The circuit, initiated by the notch switch or RF probe, involves the RF amplifier relay K1 in 6395-D and Reader relays V, W, A. In addition, contacts of S206 and cam switch S208 and of relays S and U are involved. Relays Q, M, L and P, used in 60 fpm cue delay and automatic first cue (see paragraphs 6-18 and 6-19) are also involved. Relay V receives the cue pulse from the notch switch, RF amplifier, manual cue switch, delayed cue (M 9/5) or auto first cue (P 9/5) and may be designated as the primary cue relay. The cue pulse has three functions: (1) to energize the shutter solenoid, (2) to activate the fader (if in memory), (3) to commence the 4-step counting cycle, which will be described in paragraph 6-20 (Counting Circuit).

With the printer having been started on AUTO Start the cuing action occurs as follows: Relay V is

energized by the cue pulse through Q 9/1, S 4/12, W 1/9 and R219 (voltage reducer). Relay W is also energized by the cue pulse through R249, but relay pull-in is delayed by Varistor RV206 and C215 (the latter fed through n.c. W 4/12) in parallel with W. R248 acts as a bleeder for C215. V 5/9 will supply solid B+ to V and W through the same path. As V pulls in, the cue pulse, joined by solid B+ is fed to the shutter (vane) solenoids through V 7/11, V 6/10 (in parallel), S208 cam switch (presently closed), U 6/10, U 7/11 (in parallel), W 2/10, W 3/11 (in parallel), R223 (voltage reducer), a fuse and the connecting cables. Note that the U contacts will not be closed unless the printer has been started on AUTO Start. U relay will have been energized when tape is inserted due to the position of S210A (tape switch).

As relay V is energized, relay A is energized through V 8/12 (with R220 as voltage reducer). Relay A starts the fader operation through A 11/7 and A 6/10, and provides a pulse to the cue counter through A 8/12. Relay A (through A 5/9) also starts the 4-step counting cycle which will be described in paragraph 6-20. Relay A also falls out as V 8/12 opens. Thus the circuitry for fader and counting is prepared for the next cue.

The cue pulse having ended by now, relay V and the shutter solenoids are being held in on solid B+. This is provided to guarantee a pulse of sufficient length being fed to the shutter solenoids even if the cue pulse itself is very short (as from notches at high operating speeds). Now as the S208 cam switch opens at 120° of the first revolution, the circuit to the vane solenoids is opened. In the meantime, relay W may come in shortly after S208 has opened, it being timed approximately by RV206 and C215.

NOTE: In tape operation, relay W may or may not come in. This is unimportant as the primary function of relay W is in "Test" operation or when the manual cue button is used. If and when W comes in, the circuit to V is opened by W 1/9.

S 4/12 will open at 260° of the first revolution as relay S is a first revolution counting relay (paragraph 6-20). Therefore, the circuit to relay V will be opened by S 4/12 in automatic (with tape) operation. This opens V 6/10 and V 7/11, breaking the path to S208 so that when S208 closes at 350°, no B+ can be fed to the vane solenoids. Also as V 5/9 opens, B+ to relay W is cut, setting up the initial circuit for the next cue.

Arc suppression for S208 is provided by C205 and R222. R217 is used to provide a path to ground for the discharge of C205 capacitor, which will occur as relay V drops out. C205 is charged initially at the opening of S208 (120°). R217 in the above noted discharge path will not prevent the vane solenoids from being energized as its resistance is considerably greater than the resistance of the vane solenoid circuit. R218 and C214 act as arc suppression for M 5/9, which is the cue contact for the 60 fpm delayed cue.

When the printer is being operated in "Test" mode (in which the reader does not cycle), relay V can still be operated by the manual cue button or notch cue switch, but S 4/12 would not operate because the reader shaft is not rotating.

This would mean that "V" might stay in for an extended period. To avoid this situation, "W" will be energized as outlined previously. The pull-in delay on W is generally longer than the delay of S 4/12 opening and as cam switch S208 does not open with the reader not cycling, the W 2/10 and W 3/11 contacts, being still closed, could allow a dangerous overvoltage to the vane solenoids of the light valves in case the fuse failed to blow. Therefore the U 10/6 and U 11/7 contacts, remaining open, act as protectors to these solenoids. Relay U, it may be noted, cannot be energized with tape switch S210-A open, which would be the situation if no tape was in place in the reader (or if the tape guard was raised while tape was in place). Also note that as relay A is not prohibited from becoming energized in Test Mode, the fader may be actuated.

6-18. AUTOMATIC FIRST CUE.

The "Automatic First Cue" is provided to transfer the first program (placed in memory by the Auto-Start) immediately into action without having a notch at the head end of the first scene. The #8 start hole energizes relay L through S2-8C. Relay L locks into B+ (after G has been energized) through B 5/9 and L 8/12 (B 5/9 and G 7/11 having been transferred by #8 hole). L 5/9 feeds B+ to the Capacitor C211 charging it to B+ voltage, through a current limiter, R216. At the end of the first reader cycle, when the B-relay is de-energized, (see "Counting Cycle") relay L is de-energized, but is delayed in fall-out by diode CR-204. L 5/9/1 transfers and discharges the highly charged capacitor C211 through the coil of relay P. Relay P, energized for a short time, applies a pulse to relay V through P 9/5. This operates as a cue pulse and actuates the fade or light information contained in the first tape program which has been placed in memory by the action of the #8 hole (start) as the tape was being advanced by the Auto Button. At the same time a new cycle is commenced in the same manner as a conventional cue pulse (paragraph 6-17).

6-19. CUE DELAY FOR 60 FPM.

The cue delay is necessary because of the two available film speeds of 60 and 180 fpm. It is required that the standard notches provide light changes at frame lines at both speeds. The fact, however, that the film requires a different time to run from the notch switch to the aperture at different speeds makes it necessary to provide a cue delay at the slower speeds. The delay is accomplished in the following manner: At 60 fpm, AC voltage is taken from the "60 fpm" indicator light circuit. The switch on the belt drive assembly is the actuating device for the 60 - 180 indicator switch as well as for the motor speed change. This voltage energizes relay Q through the diodes CR205 and CR206, which rectifies the AC voltage and causes relay Q to be energized by a pulsating

DC. Pulses are leveled off somewhat by the capacitor C213. Relay contact Q 9/5 transfers any subsequent cue from the normal cue line to relay M. This relay is energized with a certain adjustable delay (R208, R211 (pot) and C212) and its contact M 5/9 applies solid B+ to relay V, thereby causing a cue pulse which will start the identical actions of a normal cue described previously (paragraph 6-17). R218 and C214 act as arc suppression for M 5/9.

NOTE: As the adjustable resistance (R208 and R211) must be set up for each specific reader-printer combination, any interchange in readers from one printer to another may result in variations in the delay. Therefore, any replacement of readers will necessitate not only a recheck (on film) and probable readjustment of the cue switch and RF probe positions, but also a film check and probable readjustment of the cue delay.

6-20. COUNTING CIRCUIT.

The counting circuit consists of Relays A and B and the relay groups S-T, D-E, J-N, and C. It provides for transporting the tape exactly four steps. It also sequences light information, zero-close information and unlatching pulses to the corresponding light valves, and fade information to the proper relays.

The counting cycle may be started either by a cue or by the #8 hole. The counting cycle is begun by the cue, when relay V energizes relay A through V 8/12. Relay A then energizes relay B through A 9/5, which locks into B+ through contacts C 3/11 and B 5/9. R221 is a current limiter for B while it is "locked in." A #8 hole (at the start) begins the counting cycle by energizing relay B directly through S2-8A. Note that even though the reader is cycling continuously as the tape advances due to the Auto button being depressed, the cycle will necessarily be recommenced as above (by S2-8A) for this reason: Relay G becoming energized by S2-8B contact, has opened the Auto button circuit to the clutch.

As relay B energizes, B+ (after G energized) will be applied to the clutch through B 6/10, N 4/12 and U 5/9. Recall that U relay will be energized whenever the tape is present in the reader. The clutch releases the reader shaft which will rotate until N 4/12 opens and cuts the voltage to the clutch at the end of the 4-step cycle. N 4/12 is a third revolution counting relay contact but the diode CR207 holds the clutch energized until well into the fourth revolutions.

B 5/9 provides B+ (after relay G has been energized) to be utilized in locking in the counting group of relays (S-T, D-E, J-N, and C) after they are initially energized by the cam switches. While the reader shaft is rotating, cam switches S204/5 (arc suppressed by diode CR208 and R243) mounted on this shaft provide B+ (after G energized) to the counting relay group as follows:

At 260° of the first revolution (blank row on tape), S204/5 close and energize relay S through N 1/9, E 1/9, T 1/9. S 5/9 closes but relay T is not energized before S204/5 open because both ends of relay T coil are the same potential as long as these switches are closed. When S204/5 open (350°), B+ is taken away from point 13 of relay T (14 of relay S). Now S and T are in series on B+ through S 5/9 and both will be energized, and will be locked into B+ by S 5/9.

The preceding action occurs late in the first revolution. At 260° of the second revolution, the same action will happen to relays D and E because contact T 1/9 opened and transferred the circuit to this group. Relay D will be energized at the beginning of the S204/5 pulse. D consists of 3 relays: 1D, 2D and 3D, the coils of which are in parallel. This is necessary because, for the D operation, more contacts are needed than one or even two relays of standard type will provide. When switches S204/5 open, B+ is removed from Point 13 of E (14 of D). Relays D and E are in series and lock into B+ by 3D, 2D, and 1D contacts. Three contacts are used in series to have each one of the three D relays participating in the counting cycle.

NOTE: If one of the three D relays failed, D and E would not lock in and the counting cycle would be disturbed in this manner: The normal cycle would not end, as relay C could not become energized; therefore the tape would advance continuously until the end hole is read-out, stopping the printer. (This is actually a part of the safety circuit, although the red warning indicator on the front of the reader would not light in this particular case.)

Contact E 1/9 transfers the circuit to the J-N relay group at the end of the second revolution. There are three relays comprising relay J (1J, 2J and 3J, in parallel). Relay group J-N will be energized at 260° of the third revolution by S204/5 in the same manner as S-T and D-E previously. Contact N 1/9 will then open and transfer the circuit to the last relay of the counting cycle, which is relay C. N 4/12 cuts B+ from the clutch (which is delayed in falling out until well into the fourth revolution by diode CR207. Relay C will be energized at 260° of the fourth revolution. The rotating shaft comes to a stop, C 3/11 opens the B relay lock; relay B is de-energized, B 5/9 opens and cuts B+ from the counting cycle relays. All counting cycle relays (S-T, D-E, J-N, C) are de-energized, thus ending one four-step cycle. Note that as C 3/11 closes at the end of the cycle, B 5/9 also opens, preventing B relay from being re-energized until a subsequent cue causes A 5/9 to be closed. Varistor RV203 absorbs stored inductive energy of B on its de-energization, providing arc suppression for C 3/11. After the four-step cycle is terminated, the tape has advanced four steps.

The four-step cycle is used to feed various information into the printer. The blank step, which is the first step in the cycle, operates while the shutter solenoids are being energized. It also aids in visually distinguishing the individual sets of information on the tape. It is also used for discriminating any "out-of-cycle" condition of the tape (see safety circuits, paragraph 6-23).

6-21. RELATION OF COUNTING CYCLE TO INFORMATION READOUT.

During the counting cycle, relay groups D-E and J-N serve to distribute the light, zero close and fade information offered to them by the tape reading circuit as well as the unlatch pulse to the individual light valves in the correct sequence. These "counting" relays are directly involved in sequencing the above information to the red, green, and blue valves.

6-22. THE READING CIRCUIT.

Contacts S2-1A, 1B, 2A, 2B through 8A, 8B and 8C are located in the reading part of the reader and are operated whenever a hole in Channel 1 to 8 of the tape is present over the reading pins during a rotation of the reader mechanism. This circuitry is discussed in the following paragraphs.

a. LIGHT INFORMATION. The relay group RA to RF is operated by contacts S2-1A to S2-6A. Therefore, any relay of this group will be energized by its respective reading contact S2-1A to S2-6A whenever a pin rises through a corresponding hole. Each of the RA and RF relays utilize a transfer contact to "make or break" a circuit between the cam switch S202-A/B (a series pair) and respective slide solenoids #1 to #6 in the light valves. Operation is as follows:

Cam switches S201, S202-A/B and S203 furnish solid B+ to their circuits, when operated. Cam switches S204/S205 furnish B+ (after G energized). Therefore, when S202-A/B close at 90°, those slide solenoids whose circuits have been made by the above RA to RF transfer contacts, will be energized. Because the normally-closed side of the transfer contact is used to "make" the circuit it follows that if there is a hole in the tape, the respective relay RA to RF will be energized and the respective slide solenoids 1 to 6 of the light valves will remain de-energized as the normally-closed contact will open. If there is no hole in the tape, the opposite action will occur and the respective solenoids will become energized, the pulse being channeled through contacts of relays D and J. The manner in which these pulses are sequenced to red, green, and blue valves is explained in step d, following. R226 to R231 and R234 are current limiters for the slide solenoids. C204 acts as arc suppression for S202-A/B and R234 is a bleeder for the discharge of C204. As the current draw for the B+ circuit through the cam switches is rather high, contacts in parallel have been used (S 6/10 and S 7/11, G 6/10 and G 7/11, T 7/11 and T 8/12). C207 and R212 are used as general arc suppression for this circuit and a bleeder circuit for C207 through R214 has been provided.

b. UNLATCHING THE SLIDES. The slide solenoids become mechanically latched after being energized. Therefore, it is necessary to "unlatch" each slide solenoid early in each rotation. This is necessary, as slides that may have been latched in the previous program, but that are not to be latched in the current program must, of course, be unlatched so that they may drop into the normal position. The unlatch pulse emanates from cam switch S201 and actually energizes the unlatch solenoid at the same time that the slide solenoids are energized, but as the unlatch pulse is ended much sooner in the rotation than the slide solenoid pulse, the latch mechanism has had time to move back into the normal latching position before the pulse to the slide solenoids has ended. Therefore, any slide solenoids energized will latch and any not energized will have been unlatched if previously latched. Diode CR211, R203, R246 and C203 act as arc suppression for S201. Diode CR201 and R241 plus the varistors across the unlatch coils of the light valves provide arc suppression for the 3D and 3J contacts as the solenoid coils de-energize. R224 limits the current to the unlatch solenoids. The unlatch pulse is channeled to the light valves through contacts of relays D and J. The manner in which these pulses are sequenced to the red, green, and blue valves is explained in step d, following.

c. ZERO-CLOSE ACTION. A zero-close will be readout when there are no holes in the tape in channels #1 to #6 in all four rows. Therefore, contacts S2-1A to S2-6A will remain open, relays RA to RF will remain de-energized and S202-A/B will provide a pulse to all six of the slide solenoids (resulting in the lowest light in memory). At the same time, contacts S2-1B to S2-6B (in series) will remain closed, thus allowing relay RG to remain energized on solid B+. (RG is energized at all times, except when a pin contact #1 to #6 is being actuated by a pin passing through a tape hole.)

The closing of RG 5/9 and RG 6/10 prepares the circuit from cam switch S203 to the light valve zero-close solenoids, through contacts of relays E and N. R225 limits the current to the Z-C solenoids. C208 and R233 act as arc suppression for S203, R233 acting as a bleeder for the capacitor C208. The zero-close solenoid, on being energized, will cause a cam action to occur (mechanically latching) that will result in such a reduction of light value in memory that complete closure of the vanes at the next cue will occur, regardless of the trimmer setting being used. Sequencing of the zero-close pulses to the red, green, and blue valves is explained in step f, following.

d. RED, GREEN, AND BLUE SEQUENCING. In the previous steps, the circuitry for "light information," "unlatching," and "zero-close" has been explained through the basic path from initiation to the light valve. The sequencing of the red, green, and blue signals is directly associated with the counting relay circuit. It must first be recalled that the reading pin contacts are "made" from 50° to 230° of rotation and that the pulse to the counting relay pairs is not made until 260° and 350° of each rotation.

(1) We have seen that relay S will not be energized until 260° of the first rotation, also that S 6/10 and S 7/11 (in parallel) will have remained open until cam switches S201, S202-A/B and S203 have "made" and reopened in the first rotation (blank row), thereby preventing a zero-close signal from progressing to the light valves during

the first rotation. As no reading pins can rise during the first rotation (being blocked by the blank tape), there can be no light information signalled, except zero-close. T 8/12 and T 7/11 act as further insurance against the above, "T" relay not being energized until 350° of the first rotation. It must also be noted that G 6/10, F 6/10 and F 7/11 (in parallel) will be closed, as the printer is in "on" mode and "F" and "G" relays are energized and locked in.

(2) In the second rotation, light information will be signaled. As the basic path to the light valves has been previously explained, the signal through the RE contacts will be used as an example of the sequencing. In this case we will assuume that there is no hole in #5 channel of the red, green, and blue rows. S202-A/B will provide B+ through RE 1/9 and RE 2/10 to a 2D contact. This pulse will occur at 90° and will break at 220°.

(3) As 2D will not be energized until 260° of the second rotation, its contacts will be in the "normal" position at 90° to 220°. Therefore, the signal will pass from relay lug 10 to lug 2 (through those respective contacts) and thereon through pin R of J202 and J701 and pin 12 of the red light valve cable, thereby energizing #5 slide solenoid (L405) of the red light valve.

(4) In the third rotation, S202-A/B will again provide B+ to lug 10 of relay 2D. However, as 2D has been energized and locked in at 260° of the second rotation, its contacts have now transferred and the pulse will pass from lug 10 to lug 6 and thereon through the normally-closed contact of relay 2J (this relay not having been energized as yet). From here the pulse passes through pin S of J202 and J701 and pin 12 of the green light valve cable, thus energizing #5 slide solenoid of the green light valve.

(5) In the fourth rotation, S202-A/B will provide B+ to lug 10 of relay 2D, passing to lug 6 and to lug 10 of relay 2J. However, since relay 2J was energized and locked in at 260° of the third rotation, its contacts have now transferred and the pulse will pass from lug 10 to lug 6 and thereon through pin T of receptacles J202 and J701 and pin 12 of the blue light valve cable, thereby energizing #5 slide solenoid of the blue light valve.

NOTE: Relays 1D and 1J are used by RA to RC; relays 2D and 2J are used by RD to RF.

e. UNLATCH SEQUENCING. As relays S and T are not energized during the first rotation until well after the "making" and opening of S201, (80° to 160°) the contacts S 6/10, S7/11, T 7/11 and T 8/12 positively insure that no unlatch pulse is applied to the light valves during the first rotation. The pulse from S201 in the second, third, and fourth rotations is sequenced or channeled to the red, green, and blue light valves in exactly the same manner as the light information (step d, preceding) except that relays 3D and 3J are used for the sequencing.

f. ZERO-CLOSE SEQUENCING. Zero-close information from S203 is blocked from the first rotation by S 6/10, S 7/11, T 7/11 and T 8/12 and is channeled to the red, green, and blue light valves in the same manner as light and unlatch information except that relays E and N are used for sequencing. These relays are also second and third rotation relays of the counting circuit.

g. FADE INFORMATION WITH SIMULTANEOUS LIGHT CHANGE. In addition to the normal light information being channeled to the light valves, a hole in Channel 7, red (second revolution) row, will cause pin contact S2-7A of the reader to "make." Pin contacts S2-7B and S2-7C will also "make" but are not used. The pulse is channeled to lug 10 of relay 3D and, as this is a second revolution relay of the counting circuit energizing at 260°, its contacts are still in the normal position when S2-7A is made (at 50° to 230°). Therefore, the pulse will pass from lug 10 to lug 2, and thence out of the reader and to relay K5-S in the fader through pin X of J202 and J701 and thence through pin 8 of P704 and J501. Relay K5-S will then be locked in on one of its own contacts (K5-S 9/5). Now a signaling pulse from the reading pin contact S2-7A in the green row (third revolution) will be channeled to lug 10 of relay 3D and, as this relay has now been energized and locked in, its contacts have transferred. Therefore, the pulse now passes to lug 6 of 3D, and thence to lug 10 of relay 3J. Since relay 3J has not been energized (being a third revolution counting relay) the pulse is channeled to lug 6 of relay 3J and thence to relay K5-M in the fader, which will lock in through its own contact. The manual fade button, when used, will provide a pulse to this leg of the circuit. A pulse from S2-7A in the blue row (4th revolution) is channeled to lug 10 of relay 3D, through lug 6 to lug 10 of relay 3J. As relay 3J now is energized, the pulse passes through lug 6 to fader relay K5-N. Memory situations are set up by energizing a combination of any two, all three, or K5-M and K5-N relays separately.

h. ZERO FADE. On a zero fade (a fade with a simultaneous zero close) the fade information is channeled to the proper relay or relays of fader in the same manner as for fade information with light information (step g, preceding). However, as no hole has been punched in the light information channels #1 to #6 on a zero fade, these channels, having no holes to be read, will produce pulses to all light valve slide solenoids. These pulses cause the slides to be moved "out," thereby placing the minimum light information in memory. In addition (also because no holes in the light channels of the tape are present) the normally-closed contacts S2-1B to S2-6B will remain closed and relay RG will remain energized. This will cause the zero-close solenoids in the light valves to become energized as S203 makes contact in the second, third,

and fourth revolutions. The zero-close cam will be displaced as a result. These two conditions then will produce a memory situation in the light valves that will cause a zero-close action of the vanes at the next cue. Therefore, the combined fade and zero-close information will cause a fade and a zero-close to occur at the same cue. This condition is called zero-fade.

i. FADER ACTUATING CIRCUIT. A B+ pulse to pins j and k of the receptacle J202 will cause the fader unlatching solenoid and the B+ path to two of the five clutches to be energized if a memory situation has been set up. We have learned that relay V will become energized at the cue pulse. Contact V 8/12 closing will then cause relay A to become energized. The pulse to pins j and k (above) then will be provided through the normally-open contacts of relay A which now will be closed. Incidental at this point is the fact that when no cue is occurring (relay A not energized) B+ is provided to the fader through a normally-closed contact A 3/11 and through pin m of receptacle J202. The latter circuit provides B+ to lock-in the fader memory relays. A more detailed description of the electromechanical fader operation will be found in paragraphs 6-41 through 6-44.

6-23. SAFETY CIRCUITS.

The safety circuits are controlled by relays R, U and Z in the reader and relays K1506, K1507 in the control panel. These relays will function to stop the printer when certain abnormal events might cause damage to the film or cause the printer to produce prints which are out of color balance. These safety circuits are discussed in the following paragraphs. Procedure for restarting the printer after having been stopped by a safety circuit is covered in paragraph 6-33.

a. TAPE OUT OF CORRECT CYCLE POSITION. Whenever the tape is displaced manually from the correct position with respect to the reader cycle (i.e., when the first row to be read is not the "blank" row), the printer will stop automatically at the next cue, and red indicator on reader will light. This is accomplished by relay Z being energized. Z 10/6 will then feed B+ (after G) to the H relay coil which, when energized, will stop the printer. At the same time that Z is energized, this pulse lights the red indicator light on the front of the reader. Relay Z is locked in through Z 5/9 on solid B+. Thus, relay Z will remain energized after the printer has been stopped and the indicator will remain lighted to indicate that the printer was stopped due to a manual displacement of the tape, or by a blown shutter solenoid fuse (step b, following). Relay Z will be energized by the normally-closed contacts T 2/10 and RG 3/11. Contact T 2/10 is closed during that much of the first revolution (blank step of the tape) that the reading pins are in actuation, since T is a first revolution counting relay which energizes at 350°. Since relay RG is energized at all times except when light information is being read, both contacts T 2/10 and RG 3/11 will be closed if the light information is read out during first revolution. Such a conditon could only occur if the tape has been placed incorrectly with respect to the reading cycle. On zero-close and zero-fade, in which there is no light information on the tape, this safety device will not operate immediately, but at the next program containing light information (which in most cases would be the program immediately following), the circuit would be actuated.

b. SHUTTER (VANE) SOLENOID FUSE BLOWN. The shutter solenoids are energized indirectly by the cue pulse. This pulse provides a higher voltage to the solenoids than that at which they are rated in order to accelerate the light change. To protect solenoids from burning out if, by some component failure, the cue pulse is not terminated in time, a 3/4 amp fuse (F201) is provided. Normally, the printer could continue printing with the fuse blown, except that no light change would occur at cues. To prevent this possibility, relay R is connected across the fuse. If the fuse should blow and interrupt the circuit to the shutter (or vane) solenoids, relay R will be energized. Because its coil resistance is many times higher than the resistance of the three shutter solenoids in parallel, as long as the fuse is intact and the vane solenoid circuit shunts the relay coil by its extremely low resistance, relay R will not be energized. However, once relay R is energized, relay Z becomes energized through contact R 5/9 and the printer stops in the same manner as in "Tape Out of Correct Cycle Position," the red indicator again lighting.

c. SHUTTER SOLENOID PROTECTIVE CIRCUIT (TEST MODE). The danger of allowing the shutter (vane) solenoids to be energized when the printer has been started with the Test button, or is in the Test Mode of operation as a result of lifting the Tape Guard while the printer is in Automatic Mode, has been outlined in the Cue Circuit, paragraph 6-17. Protection to these solenoids is effected by the use of U relay. Paragraph 6-17 explains the use of the U contacts in the circuit and the method of energizing this relay is outlined in Auto Start Operation, paragraph 6-26.

d. COUNTING (OR CYCLE) CIRCUIT FAILURE. The counting circuit is comprised of eleven relays which, in operation, effect the proper sequencing of red, green, and blue light information to the respective light valves, as well as the fade information to respective relays. The circuit is designed so that, if any one of these relays should fail to operate, the cycle in operation at the time of failure could not end. The reader then would advance continuously until the #8 hole at end of tape was reached and read out, which would then stop the printer and eliminate further film wastage. In case of an extra long tape, operator would be warned by the sound of the "runaway" condition and should then press the "STOP" button to halt operation. The counting circuit failure would not cause red indicator light to glow. The only exception to the above would be the failure of C relay. In this case the clutch circuit having been opened by N relay contacts in the

third revolution, C relay failing to energize would fail to open C 3/11 contact and B would remain energized, holding the entire counting circuit energized. Therefore, S 4/12 contact in V relay circuit would be open and no further cue pulses could be actuated. In this case the operator would be required to notice that cuing had discontinued and press the stop button. Also in case the S or T relays fail to energize, the red indicator would light and the printer would be stopped by the safety circuit.

e. FILM BREAK CUT-OFF, ROLLER GATE STOP AND RF CUER FUSE BLOWN. Detailed discussion of these safety circuits will be found in paragraphs 6-31, 6-32 and 6-33 respectively. These circuits do not actually initiate in the reader, to which the preceding paragraphs have mainly been concerned.

RELAY FUNCTION-FAILURE CHART (READER ONLY)

RELAY	RELAY FUNCTION	RESULT OF RELAY FAILURE
K2-A	Energized by V 8/12, starts the counting cycle by energizing "B" through A 5/9 and the fader operation by A 6/10 and A 7/11. A 8/12 pulses the cue counter.	Fader would not operate, counting cycle would not start; therefore, no program could go into memory. Printer could run but reader will not advance on cue.
K2-B	Energized by A 5/9 or S2-8A, remains energized during the counting cycle, provides B+ to the counting relay group ("S-T, D-E, J-N, C") and starts the counting cycle by holding the clutch energized.	Same as relay A. In addition, relay V will arc. Light vanes or fade could actuate if in memory at time of relay failure.
K2-C	Energized at 260° of the fourth revolution by S204/5. B+ is cut off from the counting relay group when "B" is de-energized due to C 3/11 opening.	Counting cycle would not end because the counting relays would remain energized. As the next cue then could not restart the cycle, the reader would remain idle and the printer would continue to run. Operator would be required to notice that the following cues would not advance the reader. Printer would have to be stopped immediately with the STOP button.
K2-1D, K2-2D, K2-3D	Three relay coils in parallel energized by closing the S204/5 at 260° of the second revolution. These relays sequence the information circuits of lights and fades as well as of the unlatch pulse from red to green light valve.	Counting cycle would not end and tape would advance continuously to stop hole. Relays 2D and 3D probably arc. If stopped, printer will not start on AUTO, and tape advance will be continuous.
K2-E	Energized at the opening of S204/5 at 350° of the second revolution. Transfers the zero-close information circuit to the green light valve. E 5/9 transfers the S204/5 action from the "D-E" group to the "J-N" group.	Same as relays 1D, 2D and 3D, preceding.
K2-F	Energized at the end of the start pulse through G 5/9 after relay G is energized, causing relays F and G to lock in. Also switches the #8 hole circuit to relay H through F 9/5, thus preparing it for the stop pulse from #8 hole or other stop signals. F 4/12 opens the X relay circuit, preventing X from being energized at every "closed fade" situation.	Printer would not start. If in operation at time of failure, printer would stop (as an open coil would kill the circuit to relay G), but AUTO button would continue to advance tape past the #8 hole.

3D changed when printer quit reading notches

RELAY FUNCTION-FAILURE CHART (READER ONLY) (CONT)

RELAY	RELAY FUNCTION	RESULT OF RELAY FAILURE
K2-G	Energized by the start pulse #8 hole or reset button, provides B+ through G 7/11 and G 8/12 (in parallel) to the following: The power relay K1502 in the control panel, the counting cycle circuit, the douser, the clutch circuit, the fader operation and to the safety circuits activated by relay Z as well as the film break switch. Also feeds B+ to P 5/9 to activate automatic first cue, and to the manual fade and cue switches, the cue circuit and the STOP switch circuit.	Printer would not start except on TEST. If running, printer would stop when relay failed. 2/79 Printer would not stop at end hole Changed F + H when failure to read end Hole
K2-H	Energized by the stop pulse (#8 hole) or the STOP button, it de-energizes the G-F relay group, stopping the printer by opening the circuit to these relays.	Printer would not stop on any of the stopping circuits.
K2-1J, K2-2J, K2-3J	Three relay coils in parallel, energized by closing of S204/5 at 260° of the third revolution, switch information circuits of lights and fades as well as of unlatch pulse from green to blue light valve.	Counting cycle would not end; tape would advance continuously through stop hole and printer would stop. Relay 3J will probably arc. If stopped tape would advance continuously while AUTO button is depressed.
K2-L	Energized by the start pulse, (S2-8C) held energized by relay B through B 5/9 and L 8/12 until the end of the first counting cycle, then released with a delay by diode CR204. Transfers the circuit to discharge capacitor C211 through P relay coil which applies the automatic first cue to the cueing circuit through P 9/5 (C211 having been charged through current limiter R216 and through L 5/9 when L was energized).	Automatic first cue would not operate.
K2-M	Energized, delayed, by the cue pulse through Q 9/5 when the printer is operating at 60 fpm. Provides a delayed pulse (B+ through M 5/9) to the cueing circuit to guarantee a frame line light change at 60 fpm, if the notch switch is set for a frame line light change at 180 fpm. The delay on relay M is controlled by R208, R211 (pot), and C212.	At 60 fpm printing speed, no cue pulse will be applied to relay V and to the shutter solenoids, and the reading cycle will not operate as A would not be energized. There is no protection provided against this failure. Since cues will not be heard or counted, only the vigilance of the operator will detect failure.

RELAY FUNCTION-FAILURE CHART (READER ONLY) (CONT)

RELAY	RELAY FUNCTION	RESULT OF RELAY FAILURE
K2-N	Energized at the opening of S204/5 at 350° of the third revolution, transfers the zero-close information circuit from the green to the blue light valve. N 9/5 transfers the S204/5 action from the "J-N" group to "C" relay of the counting group. Also opens the circuit to the clutch as N 4/12 opens, but clutch does not fall out until the fourth revolution as it is held in by diode CR207.	Counting cycle would not end, tape would advance continuously until stop hole is read-out. Printer would then stop. 8/8/72 Changed this relay when reader advanced to 3rd position when starting 1 past Auto cue
K2-P	Energized by the discharge of capacitor C211 at the end of the first counting cycle after start. Provides the automatic first cue to the cueing circuit through P 9/5.	No automatic first cue will be applied.
K2-Q	Energized by AC through diodes CR205, CR206 when the printer drive is on 60 fpm speed. Switches the cue pulse from its normal line to relay M which, delayed by R208, R211 (pot) and C212, applies a cue pulse to the cueing system through M 5/9.	At 60 fpm the light change will not occur on the frame line.
K2-R	Energized when the fuse in the shutter solenoid line is blown, energizing relay Z through R 5/9 which stops the printer and which will light the red indicator light at the same time.	Printer continues printing and could continue with blown fuse. As a periodic check — remove fuse and operate printer through a cue; "R" should energize and stop the printer. The red indicator should also light.
K2-RA through K2-RF	The RA to RF group is energized by the reading pin contacts (S2-1A to S2-6A) of holes #1 to #6 (light information), RA by #1, RB by hole #2, and so on. These relays convert the normally-open pin contacts of hole #1 to #6 into corresponding normally-closed contacts in the relays to adapt the tape hole code to the specific decoding operation of the light valves. This means that slide solenoids in the light valves are not energized when a hole #1 to #6 is read-out. Also, a slide solenoid is energized when no hole is read-out in the corresponding channel.	Erroneous program will be fed into the slide solenoids and color will be out of balance (mis-lights will occur). Detected by periodic checks of light valve read-out.
K2-RG	Energized at all times that A.C. current is being applied to the printer D.C. power supply, whether the printer is in the "ON" mode or not, as long as no information in channels #1 to #6 is being read-out. In the case of zero-fade and zero-close programs, contacts RG 5/9 and RG 6/10 close the circuit to the zero-close solenoids of the light valves through E and N contacts.	The red warning light on the reader will light and tape will advance continuously, but printer will not stop until stop hole is reached.

RELAY FUNCTION-FAILURE CHART (READER ONLY) (CONT)

RELAY	RELAY FUNCTION	RESULT OF RELAY FAILURE
K2-S	Energized by closing of S204/5 at 260° of the first revolution. Prepares the circuit to the camswitches S201, S202-A/B and S203 as S 6/10 and S 7/11 (in parallel) close. As S 4/12 opens in first revolution, relay V de-energizes and ends cue pulse.	The red warning light on the reader will light and the printer will stop by virtue of the safety circuit.
K2-T	Energized at the opening of S204/5 at 350° of the first revolution. Transfers the S204/5 action from the S-T relay group to the D-E group through T 5/9. T 2/10 prevents relay Z from being energized during the second, third and fourth revolutions, when RG 3/11 closes during light information read-out.	In case of failure; safety circuit would stop the printer and red indicator would light.
K2-U	Energized only when tape is inserted, in which case S210-A (tape switch) is closed. Prevents AUTO button from energizing clutch if printer has been started on "Test Start" or if tape guard is open.	Tape will not advance when AUTO button is depressed.
K2-V	Energized by the cue pulse, the delayed cue pulse, the automatic first cue or the manual cue, it initiates the cue operation and, by energizing relay A, it initiates the fader operation as well as the counting cycle (by energizing relay B through A 5/9).	No cue pulse would be applied to the shutter solenoids, the fader would not actuate (if in memory) and the reading cycle would not be initiated. (See relay M.)
K2-W	Energized by the cue and contact V 5/9, with a delay in pulling in (R249, RV206, C215), it ends the cue pulse period by de-energizing relay V on "Test" operation only, by opening contact W 1/9 (when the reader shaft is not running and relay S does not energize).	At the next cue on "TEST" operation, relay V would remain energized. On automatic operation, no malfunction will occur since relay W is not involved.
K2-X	Energized by A.C. (changed to pulsating D.C. by CR202 and CR203) through same switch on fader mechanism that switches fader position indicator lights. When switch illuminates the "closed" indicator, relay X energizes and opens the circuit to the clutch through the AUTO push button by means of contact X 1/9, thus preventing the printer from being started with the fader closed. An F relay contact will prevent X from becoming energized if printer is running.	Printer would start even with fader closed.
K2-Z	Energized by safety circuits, which also light red indicator. Locks into B+, thus keeping red indicator lit after printer has been stopped by action of relay Z. Relay can be de-energized by reset button.	The red indicator would not remain lit when the safety circuit is activated and the printer would not stop. The red warning light will flash.

NOTE: Relay K2-Y is not used in the relay circuitry and is available as a spare.

6-24. PRINTER FUNCTIONAL THEORY.

The following paragraphs are presented as an aid to the serviceman in tracing any particular function or electrical action through its complete path in the printer. Reference should be made to the group of printer schematics furnished in Section IX. These drawings will all fit together according to a layout furnished with them and may be taped together into one composite schematic.

A numerical system of electrical component identification is used in all schematic drawings of the printer. A block of 100 numbers is used for identifying the components in the separate subassemblies or areas. This makes it quite simple to locate the various components in schematics that portray circuits passing through several different subassemblies.

It is also helpful in locating the correct electrical items in the Parts List.

The following charts outline the numerical system and explain the symbols used for the various components.

Number Block	Subassembly	Subassembly No.
1 - 99	Main	
100 - 199	Panel (Control)	034376
200 - 299	Reader	034005
300 - 399	Power Supply	034007
400 - 499	Light Valves	034477
500 - 599	Fader	034498
600 - 699	Front Panel (Instrument)	034039
700 - 799	Harness (or Vane Housing)	031846
800 - 899	Top Plate	034043
900 - 999	Push Buttons	034110
1000 - 1099	Belt Drive	034451 (034458 50c)
1100 - 1199	Tightwind (or Take-Up)	034220
1200 - 1299	Transformer (Stabilizer)	031848 (031849 50c)
1500 - 1599	Panel Mounting Board (Control)	034378

In explanation, a few different components of various subassemblies are listed below:

Relay	in Top Plate	K803
Capacitor	in Reader	C233
Resistor	in Reader	R233
Terminal Board	in Harness	TB720
Diode	in Power Supply	CR319

The following exceptions to the above numerical system occur on relays and reading pin contacts only in the Reader and on relays only in the Fader.

(1) Relays of the Reader will be identified as: K2-A, K2-RG, K2-3D, etc. The number 2 following the K indicating the 200 series of numbers. K indicates "relay."

(2) Reading pin contacts will be identified as: S2-3, S2-8A, S2-7B, etc. The number 2 again indicating 200 series. S indicates "switch."

(3) Relays of the Fader will be identified as: K5-M, K5-T, K5-K, etc. The number 5 indicating the 500 series of numbers.

It must further be explained that as the following assemblies are considered as accessories to the printer, number blocks have not been assigned to their electrical components. In each case the component identification commences with number 1. Discrimination must therefore be made in order not to confuse items with those in the "Main" or 1 to 99 block of the printer.

These assemblies are:

(1) Soundheads
(2) 1000 watt rectifier
(3) R.F. cuer

In all schematics, components are shown in the normal position (relays de-energized, button switches not depressed, etc.), printer in the "off" mode and with the reader in the "home" position (prepared to begin a cycle). In many instances the remark "B+ after K2-G" or "D.C.+ after K2-G" will be used in the copy or noted on schematics. This signifies that B+ is present in that circuit when the printer is in the "on" or operating mode, in which situation reader relay K2-G is always energized and locked-in.

Commencing with this paragraph, the electrical functions of components in the entire printer will be discussed, rather than those in the reader alone (as in previous paragraphs). Therefore, the full designations will be used on reader components, as well as others, from here on.

THE D.C. POWER SUPPLY for the printer furnishes 150 volts D.C. for operation of the light valves, for dynamic braking and for most of the relay and switch circuits. It is not used for the printing lamp supply. A Sola regulating transformer is used in conjunction with this supply for voltage stabilization. A layout for the connecting cables of the printer and accessories is provided in Figure 15, page 13.

THE DESIGN 6160A or B 1000 WATT RECTIFIER is generally used for printing lamp D.C. supply. Schematics for this unit are provided in the schematic pack contained in Section IX.

EXPLANATION OF SYMBOLS USED ON ALL SCHEMATICS

COMPONENT DESIGNATOR	IDENTIFYING SYMBOL, DESIGNATOR AND NUMBER	COMPONENT
F	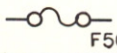	FUSE
R	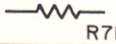	RESISTOR
C	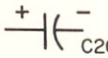	CAPACITOR
D or CR		DIODE
RV		VARISTOR
K	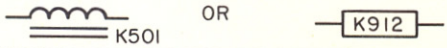	RELAY COIL
K2 K5	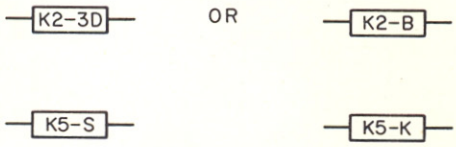	RELAY COIL (Reader and Fader) Exceptions: Letters, or letters and numerals preceded by designation K2- (for Reader) upper, and K5- (for Fader) lower.
K	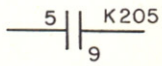	NORMALLY-OPEN (N.O.) RELAY CONTACT (Pins 5 and 9 of relay K205 shown.
K	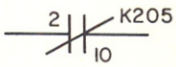	NORMALLY-CLOSED (N.C.) RELAY CONTACT (Pins 2 and 10 of relay K205)
S or SW	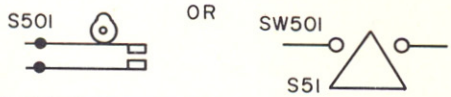	SWITCH CAM-OPERATED FUNCTION
S or SW	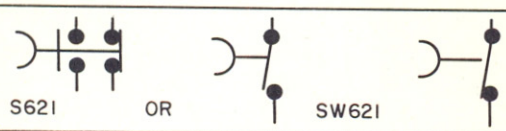	PUSH BUTTON SWITCH Normally-open and normally-closed shown.
S2	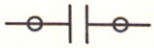	SWITCH READING PIN CONTACTS (Normally-open)
S2		SWITCH READING PIN CONTACTS (Normally-closed)
CR or VR		VOLTAGE REGULATING DIODE
L	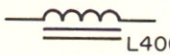	SOLENOID
Q	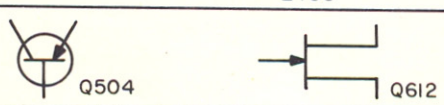	TRANSISTOR
CB		CIRCUIT BREAKER

EXPLANATION OF SYMBOLS USED ON ALL SCHEMATICS (CONT)

COMPONENT DESIGNATOR	IDENTIFYING SYMBOL, DESIGNATOR AND NUMBER	COMPONENT
	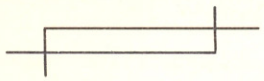	CIRCUITS NOT CONNECTED
	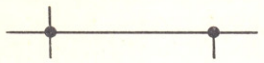	CIRCUITS CONNECTED
T		TRANSFORMER
J	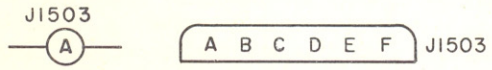	MALE CONNECTOR - Single and group shown - Letters or numbers used
P	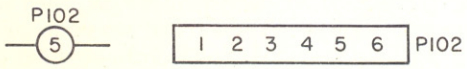	FEMALE CONNECTOR - Letters or numbers used.
J or P	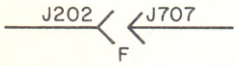	JOINED CONNECTORS - Pin F Reader to Vane Housing shown
TB	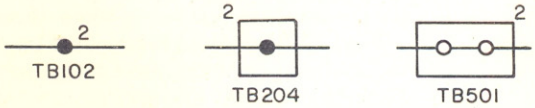	TERMINAL BOARD (Lug 2 shown solid terminal dot means soldered or taper pin connection; open dot, screw connection)
K	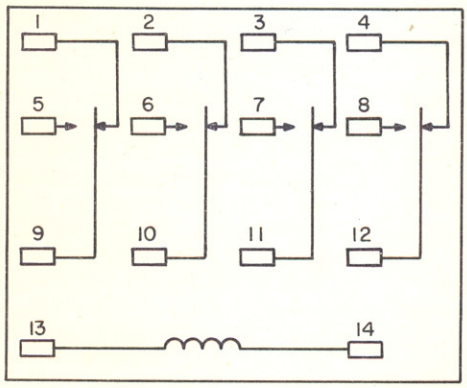	Contact numbering and form on Potter & Brumfeld on plug-in relays used in reader, tape punch, tape checker-duplicator and control panel. Relay base and socket are numbered accordingly. A contact between lugs 3 and 11 or 7 and 11 of relay K2-B would be identified as shown below: 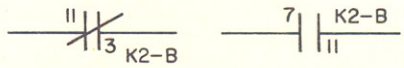
B+		D.C. Positive
B-		D.C. Negative
K	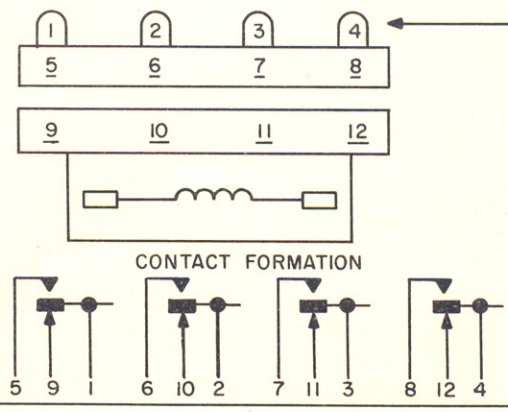	These 4 terminals on clapper end (opposite end on view shown) Contact numbering on Ohmite relays K1502, K1503, and K1504 in control panel (viewed from end, having 8 terminals)

6-25. MAIN POWER SWITCH.

As this circuit breaker CB602 is closed, A.C. high is fed from J102-B through manually closed A.C. toggle S102 (rear of control panel), through a fuse F101, through J106-B into the vane housing, through J703-9 into the front plate to the breaker CB602, then through J703-13 back into the vane housing with a branch to the safelight, then into the reader through J202-e where it feeds the cue counter line, and the reader motor and through J203-A, the primary of the regulating transformer is fed. This causes the D.C. power supply to be energized. The A.C. low can be traced back through the reader, vane housing and panel to J102-C. As the D.C. power supply is energized, 150 VDC is fed to the reader through the transformer junction box, entering the reader in two separate lines through J203-D and E. One line will connect at TB201-2, the other at TB201-10. Various circuits emanate from these two terminals and will be called solid B+. D.C.- will terminate in the reader (in most cases) at TB201-8 and from there back to the power supply through J203-C. The above terminals are convenient check points for D.C. power. A.C. high (switched by power breaker CB602) can be checked in the reader at TB201-7 and A.C. lower at TB207-9.

6-26. AUTO START OPERATION (AUTO button depressed).

a. TAPE ADVANCE. The auto-start tape advance will operate only with tape inserted, as contact K2-U 5/9 must be closed for B+ to be applied to the clutch L201. This will require K2-U to be energized which will occur only if S210-A (Tape Switch) is closed. This switch will be closed only if tape is in place and tape guard closed over the tape (the tape guard also actuates the S210-A/B switches, as does the tape bar). With S210-A closed, S210-B will be open and vice versa, these switches being interlocked. This prevents the TEST button actuating when tape is in place (see paragraph 6-36, Test Start).

As the AUTO button is held dpressed, solid B+ is fed through n.c. K2-G 3/11, 4/12, through K2-X 1/9, into panel through J201-E, into push buttons through J108-A, through n.c. TEST switch contacts to AUTO switch. From the AUTO switch the path is through J108-G into the panel where the circuit is divided, one leg returning to the reader through J107-A, through n.c. K2-B 12/4 and K2-U 5/9 to energize the clutch L201. This causes the tape to advance continuously. The second leg of this circuit energizes K1503 which will remain energized only as long as the AUTO button is held depressed.

b. TAKE-UP MOTOR OPERATION DURING TAPE ADVANCE. K1503 causes the take-up motors to be energized at reduced A.C. voltage in the following manner. A.C. entering J118-14, P1501-14 from the Motor circuit breaker, is fed through the now-closed contacts K1503 5/1, 6/2, 7/3, 8/4, through resistance R1508, 9, 10 and 13 back through P1501, J118 to the four take-up motor receptacles. It should be noted that components in the panel fall into two block numbers of identification, the 100 and 1500 series. The circuit thus closed by K1503 contacts also feeds the edge lights, footage counter switch and hour meter. The negative leg of the A.C. can easily be traced back to J102-C.

c. START ON NO. 8 HOLE. (Also see paragraph 6-16, a.) As the tape continues to advance on AUTO start, the No. 8 hole eventually will be read out. Solid B+ from TB201-2 will be fed momentarily through the closed pin contact S2-8B and through normally-closed contact K2-F 9/1 to energize relay K2-G. The negative leg is returned through normally-closed contact K2-H 10/2 to TB201-8. As K2-G 5/9 closes, solid B+ potential is applied to lug 14 of relay K2-F which will energize as S2-8B opens, thus removing the B+ potential from lug 13 of relay K2-F. Relays K2-F and K2-G now will become locked-in on solid B+ and, being in series, they act as voltage dividers for each other and serve to prevent overheating. B+ to the AUTO switch is now cut as K2-G 3/11 and 4/12 open. Recall that K1503 will also fall out.

NOTE: As relays K2-F and K2-G in the reader are the initial starting or "On" mode relays, many circuits throughout the printer will have B+ potential and A.C. applied to them when these relays are energized. These B+ circuits will be labeled "D.C.+ after K2-G) and include the emergency (K2-Z), cycle (K2-B 6/10), manual cue switch, auto-first cue (K2-P 9/5), counting, manual fade switch, fader (K2-A contacts), douser, K2-A relay of cue circuit, film break switch, notch cue switch, stop button, power relay K1502, roller gate switch.

d. STOP ON NO. 8 HOLE. (Also see paragraph 6-16,b.) At the next read-out of a No. 8 hole (the "end" hole), B+ will be fed momentarily through closed pin contact S2-8B and through the now-closed contacts K2-F 9/5 to energize relay K2-H. As contact K2-H 10/2 opens, the negative leg of the K2-F and K2-G relay circuit is broken and these relays will fall-out thus breaking the entire chain of circuits.

6-27. POWER AND ASSOCIATED RELAYS IN CONTROL PANEL.

a. The Low-Torque Take-Up Relay K1503 has already been discussed in paragraph 6-26, steps a and b. Other relays in the panel and their functions are as follows:

b. Power Relay, K1502, becomes energized by two methods:

(1) On "D.C.+ after K2-G," as a result of AUTO or RESET start.

(2) On K1505 contacts closing as a result of TEST start.

K1505 contacts cause K1504 (Dynamic Brake Relay) to become energized on solid B+, cause the A.C. circuit to DRIVE motor to be closed and also cause

the A.C. circuit to the take-ups to be closed through a path that eliminates the low-torque feature. Other A.C. circuits closed feed the edge lights, footage counter switch and hour meter.

Energy to K1502:

(1) As the reader is placed in the "on" mode by the #8 hole read-out, or by the RESET button, either of which will cause K2-G and K2-F to become energized and locked in, the "D.C.+ after K2-G" enters the panel at J201-F then through J118-6 to energize K1502 (power relay). The relay will remain energized as long as "D.C.+ after K2-G" is present.

(2) Or as K1505-8/12 close, solid B+ from P1501-7 will energize K1502. Will remain energized as long as K1505 is energized. Douser will also be energized. See step d of this paragraph. Circuitry to Drive and Take-Up motors as a result of this relay energizing is outlined in paragraph 6-37.

c. Dynamic Brake Relay, K1504, becomes energized as K1502 is energized. Contacts of energized K1504 close a solid B+ circuit to the Drive motor through normally-closed K1502 contacts, thereby applying B+ to the Drive motor as K1502 drops out, breaking the A.C. circuit. This B+ application is only momentary, as K1504 will fall out shortly after K1502. The application of the B+ to the Drive motor will stop the motor rotation quickly.

Energy to K1504: As K1502 1/5 closes, solid B+ from P1501-7 energizes K1504 through current limiter R1515, and also charges the capacitor C1505. K1504 remains energized as long as K1502 is energized. The braking action circuitry is outlined in paragraph 6-37.

d. Test Start Relay, K1505, becomes energized on a signal from TEST button switch and locks-in on solid B+. K1505 contacts cause K1502 to become energized, thereby causing Drive and Take-Up motors to operate, douser to open. Also the manual fade, cue and notch cue switches, contacts K2-V 8/12 and K2-A 3/7/11 will have B+ potential available.

Energy to K1505: As the n.o. contacts of TEST switch are closed, B+ fed to them through n.c. contacts of STOP and AUTO switches from J108-C, is fed through J108-B and J118-1 to energize K1505. K1505 9/5 closing, then locks the relay in on B+ from the n.c. STOP contacts, which is fed through J108-D and J118-2. K1505 will remain energized until STOP button is depressed and its n.c. contacts are opened, breaking the B+ to the lock-in contact of the relay. The circuit to K1502 is outlined in (b) of this paragraph and to Drive and Take-Up motors in paragraph 6-37.

Energy to douser: Note that as the printer is started in TEST mode, the reader starting relays are not energized and so there is no B+ present in the "D.C.+ after K2-G" circuits. Therefore the contacts K1505 8/12 in addition to locking-in K1505 will apply the same B+ to the above circuit, commencing through P1501-6. Tracing back it will be found that the douser will be energized in the same manner as in AUTO start. As K1505 falls out, the douser circuit will be broken.

Energy to cue and fade switches, K2-V and K2-A contacts: The available B+ to these components is also caused by the use of the above "D.C.+ after K2-G" circuit. Therefore, the cuing system may be actuated and the fader may be operated (at fade length 16 only) while printer is in TEST start mode.

e. R.F. Cuer Safety Relay, K1506, becomes energized on A.C. hi when fuse F102 blows. This fuse protects the R.F. Cuer. Contacts of K1506 close a "D.C.+ after K2-G" circuit to K2-H relay in the reader. Recall that K2-H contacts opening will break the circuit to the energized "On" mode relays K2-G and K2-F, causing the printer to stop. The red indicator on the reader will not be lighted in this case.

Energy to K1506: A.C. Hi from J102-B normally passes through F102 to the RF Cuer transformer T1 through J109-A. If F102 blows, the A.C. will then be fed through R101 and CR101, CR102, being rectified to half-wave D.C.. It will then be fed through J118-16 to energize K1506, continuing through P1501-15 and J109-A to the R.F. Cuer.

Energy to stop circuit: K1506 9/5 closing will feed "D.C.+ after G" from P1501-6, through P1501-5 into the same circuit that is energized by the STOP switch (when depressed). This circuit then is fed through J107-D to K2-H. The action of this relay has been outlined in paragraph 6-16,b.

f. Film Break Stop Relay, K1507, becomes energized on "D.C.+ after K2-G" at such a time that the negative film breaks, allowing the Film Break switch to close. K1507 contacts closing, will then energize the stop circuit to K2-H and the printer will stop. The red indicator on the reader will not light in this case.

Energy to K1507: D. C.+ potential (after K2-G) applied to one pole of the Film Break switch S3 when the printer is operating, from J112-D, will be fed through J112-C on the closing of the switch. The circuit will then pass through J118-3, through R1511 and R1512 (the latter being a pot.) to energize K1507. However, the combination of the above resistors and C1504 will cause a delay in the pull-in time. K1507 8/12 will lock-in the relay on the same circuit. The pot. may be adjusted to shorten or lengthen the delay if desired.

Energy to Stop circuit: K1507 9/5 closing will feed "D.C.+ after K2-G" from P1501-6 through P1501-5 to the Stop circuit exactly as K1506 (step e, above) and with the same stopping action. This switch action will not be effective in stopping the printer previously started on TEST start, as the relays K2-G and K2-F are not energized in this case.

6-28. EDGE LIGHT, HOUR METER AND FOOT COUNTER SWITCH.

It has been outlined in paragraph 6-26 how the K1503 contacts fed A.C. from P1501-14 to TB1503-1 and thence to the Edge lights during the Tape Advance function. Now recall that in any type of start, AUTO, TEST, or RESET, the Power Relay K1502 will become energized. Contacts K1502 8/4 closing will then feed the above A.C. to TB1503-1, through P1501-24 to TB102-10, thence to the Edge Lights through the pot. R102, switch S103 and through J110-A, J111-A to the lights DS1 and DS2, the low leg returning through J110-B, J111-B. The circuit to the Hour Meter from TB102-10 through J106-C to the meter L1 and back through J702-E to A.C. low in the Panel. The circuit to the Foot Counter Switch also is traced from TB102-10 through J105-D to the switch S1003, back through J1001-E, through J106-F, through J703-3 and returning to A.C. low through P601-1.

6-29. RESET START-STOP SWITCH.

This switch will cause the printer to be started or stopped in the same manner that the #8 hole functions, by energizing K2-G to start and K2-H to stop. The switch is a double-pole type, S209-1 contact performing the above two functions. The S209-2 contact will break the circuit from the emergency relay K2-Z and the indicator light DS201 if they have become energized. It should be noted that in effecting this latter action, the printer would immediately be restarted by the S209-1 contact. Also note that S209 will not stop the printer if it has been started on TEST, as in this case K2-G and K2-F would not have been the means of energizing the Power Relay K1502.

6-30. STOP PUSH BUTTON SWITCH.

This switch will stop the printer previously started by either of the three starting methods. Its action from a TEST start mode has been outlined in paragraph 6-27,d. In the other two starting methods (by #8 hole or by reset) recall that the K2-F and K2-G relays will have been energized and locked-in. The STOP switch then will utilize the "D.C.+ after K2-G" potential fed through J108-F to the n.o. contacts, which will close on depression of the button, feeding B+ through J108-E, then through J107-D to energize K2-H, thus opening K2-H 10/2 causing K2-G and K2-F to fall out. This, as we have had outlined previously, will cause the printer to stop.

6-31. FILM BREAK CUT-OFF SWITCH.

The action of this microswitch, actuated from the lower negative stabilizer springing back against the switch in case the negative parts, will prevent the negative from being run out on the floor. The circuitry has been outlined in paragraph 6-27, f. Not effective in TEST start mode.

6-32. ROLLER GATE STOP SWITCH AND THREAD (SYNC) LIGHT SWITCH.

This switch is a double pole, single throw micro operated by the roller gate being opened. As its purpose is to prevent light being projected into the dark room if a printing operation was being started and the gate was inadvertently left open, it was designed to be effective only on AUTO start mode. A secondary reason is the necessity of providing means for the gate and douser to be open so that light readings may be made at the aperture. Therefore the Roller Gate Stop is not effective on the TEST start mode. The switch, when actuated, closes two circuits: one a "D.C.+ after K2-G" to the printer STOP circuit and the other an A.C. circuit to the synching light.

(1) One pole of the switch S4 draws "D.C.+ after K2-G" from this line in the Panel through J104-A, back through J104-B, through J107-D to energize K2-H which will stop the printer (having been started by the energizing of K2-G and K2-F).

(2) The second pole of switch S4 drawing A.C. Hi through J104-D and back through J104-C, through J106-H lights the threading (synching) lamp DS5, returning to A.C. Low through J702-E.

6-33. EMERGENCY STOP (OR SAFETY) CIRCUITS.

These circuits are listed below:

(1) Tape Out of Correct Cycle Position.

(2) Shutter (Vane) Solenoid Fuse Blown.

(3) Counting (or Cycle) Circuit Failure.

Circuitry of the above emergency circuits has been discussed previously in the Reader Section, paragraph 6-23.

Safety circuits initiating in the Control Panel are:

(4) Film Break Cut-Off. This circuit has been outlined in paragraph 6-27,f.

(5) Roller Gate Stop. This circuit has been outlined in paragraph 6-32.

(6) R.F. Cuer Fuse Blown. This circuit has been outlined in paragraph 6-27,e.

On the occasion that printer has been stopped by an emergency circuit and the red indicator has been lighted, it will be necessary to depress the Reset button to de-energize relay K2-Z and extinguish the indicator light. Note that the Reset n.c. contact S209-2, on opening, will cause the above to occur. However, the second contact S209-1 (n.o.) closing, will restart the printer by energizing relay K2-G. Therefore, the Reset button should be pressed a second time, which will then cause K2-H to energize, stopping the printer

again. The Drive Motor Switch may be turned off during this recovery operation. At the next AUTO start the reading cycle will automatically be correct, providing that the malfunction which caused the emergency stop has been corrected.

6-34. DOUSER CIRCUIT. The douser becomes energized on all three types of starting. The rotary solenoid armature having a leaf shutter attached, lifts the shutter out of the light beam as the coil is energized. The circuitry on AUTO start is outlined in paragraph 6-16a (3) and on TEST start in paragraph 6-27d. The circuitry on RESET start would be identical with that of AUTO start.

6-35. POWER AND ASSOCIATED RELAYS (AUTO AND RESET START - RE: DRIVE AND TAKE-UP MOTORS).

In previous paragraphs 6-26 to 6-30, the circuitry and means by which the various relays in the Reader and Control Panel are used to distribute current to the various units of the printer to effect a starting or stopping action, has been outlined. Note that relay K1502 is the principal starting and stopping relay in the Control Panel. Contacts of this relay provide basic switching function of the Drive and Take-Up motors. Recall also that in the AUTO or RESET type of start or stop, this relay is caused to energize or de-energize by the action of Reader relays K2-G and K2-F, which either make or break a D.C.+ circuit to the Panel and K1502. Circuitry to the Drive and Take-Up motors from K1502 contacts will be outlined in paragraph 6-37.

6-36. POWER AND ASSOCIATED RELAYS (TEST START - RE: DRIVE AND TAKE-UP MOTORS).

With reference to paragraph 6-35, let it be noted that the Control Panel relay K1502 will receive its energy through the action of the TEST button and Control Panel relay K1505, entirely independent of Reader relay action.

6-37. DRIVE AND TAKE-UP MOTOR OPERATION AND DYNAMIC BRAKING.

The means by which the switching of current to energize and de-energize the Drive and Take-Up motors by the use of the Power relay K1502 in the Control Panel having been covered in previous paragraphs, the circuitry to the motors themselves will now be outlined.

a. DRIVE MOTOR START. As K1502 becomes energized by any one of the starting methods, A.C. High entering the Panel at J106-G from the Motor circuit breaker, is fed through J118-14, through now-closed K1502-7/3, then through P1501-12 to J103-B. The low leg from J103-C returns through J118-10, through now-closed K1502 2/6, through P1501-8, S102 and to A.C. low at J102-C.

The motor itself then draws A.C. high from J103-B through either the 60 or 180 position of the 4 pole single throw switch S1004 energizing the dual field and capacitor starting arrangement of the motor M1002. At the 60 speed the C1002 and motor leads 8 and 4 are being used, the motor finally operating on the single field from lead 4. At the 180 speed the C1001 and motor leads 14 and 18 are used, running operation utilizing the field from lead 14. The low leg then returning to P1002-C (connected to J103).

b. DRIVE MOTOR STOP AND DYNAMIC BRAKING. As K1502 becomes de-energized, the K1502 7/3 and 2/6 contacts revert to their normal open position, thus breaking the A.C. circuit. Immediately the contacts K1502 10/2 feed solid B+ from P1501-7, through P1501-10 to J103-C (and on through the motor field); back through P1002-B and J118-12, through n.c. contacts K1502 3/11, through R1507 (pot.) to the contacts K1504 7/3, 2/6, and 5/1. Recall that each time K1502 is energized, K1504 becomes energized (through K1502 1/5) and that K1504 has an adjustable delay circuit which will delay the fall-out of the relay for a short time following the de-energization of K1502. Therefore at this time the K1504 contacts (above) will be closed and the D.C.+ will continue on through P1501-17, through the fuse F104, through J107-J to the D.C.- circuit in the reader. At the time that K1504 finally falls out, the D.C. circuit will be broken at the K1504 contacts. The capacitor-resistor combination C1502-R1505 will act as arc suppression for these contacts as they open. The D.C. being applied to motor winding will cause it to stop quickly. The length of the delay on K1504 and current limiter in the D.C. circuit both will affect the quickness of the stop.

c. TAKE-UP MOTOR OPERATION. Again as K1502 becomes energized the contact K1502 8/4 closing, feeds A.C. from P1501-14 (from the MOTOR circuit breaker) to TB1503-1 where it is distributed to each take-up motor through the n.c. contacts K1503 4/12, 3/11, 2/10, and 1/9, and through respective pins of P1501-18, -21, -22 and -23, leading onto pin A of J119, J113, J114 and J115. Note that as K1503 is not now energized, its n.c. contacts have caused the circuits to by-pass the "low-torque" resistors. Refer to paragraph 6-26,b. Then as K1502 becomes de-energized, the A.C. circuit to the take-ups is broken as K1502 8/4 opens, except that the delayed opening contacts K1504 8/4 serve to hold the circuit closed long enough to prevent slack in the film at the stop. C1503 serves as arc suppression for both of those contacts.

6-38. CUING SYSTEMS.

The two signaling devices utilized for activating the Reader are indicated as: Notch Cue Switch S2 and R.F. Cuer relay K1 contacts. The schematic shows the switch S2 receiving "D.C.+ after K2-G" from that circuit in the Control Panel, being fed through J112-B to TB1-2 and then to the switch. From the switch then to TB1-1, through J112-A, then through J107-B and J201-B from which point the cue pulse is picked up in other paragraphs, indicated below, which have outlined the various cue circuits.

Note that as drawn on the schematic, the R.F. Cuer is not actually connected to the cue circuit. This

device, when used, will have its "Output" connected, as indicated, to TB1 on Picture Head in place of this Notch Cue Switch. The latter then will be connected to the "Notch Switch Input" on the R.F. Cuer. This hook-up allows for the selection of either the R.F. pulse separately, or of both the R.F. and Notch pulses. It also allows for the 60 fpm delay to be effective on both systems, the R20 and C11 in the R.F. Cuer output line timing the R.F. signal to be compatible in "time from make" with the notch signal. Therefore a single delay system in the reader may be used for both pulses.

The circuitry of the R.F. Cuer itself will not be outlined as it is a highly specialized circuit and if trouble occurs it is recommended that the unit be returned to Bell & Howell for service.

The following cue circuits have been outlined in the paragraphs noted:

Cue Circuit	Paragraph
R.F. Cuer fuse blown safety circuit	6-27,e
Cue pulse initiation, notch and R.F.	6-17
Cue pulse to cue relay and vane solenoids	6-17
Cue pulse to fader	6-17, 6-22i
Cue pulse to counting circuit	6-17, 6-20
Cue delay for 60 fpm	6-19
Auto first cue	6-18
Manual cue	6-17

6-39. VANE SOLENOID FUSE BLOWN SAFETY CIRCUIT.

To prevent film wastage in the case that this fuse blows in protecting the light valve vane solenoids. The circuitry is outlined in paragraph 6-23,b.

6-40. CYCLE OR COUNTING CIRCUIT (SEQUENCING).

Circuitry for this function is contained entirely in the reader and is outlined in previous paragraphs 6-14, d and 6-20.

6-41. TAPE READOUT.

Description and circuitry for this function, which is contained entirely in the reader, is outlined in paragraphs 3-11, 4-4, 6-21 and 6-22.

6-42. FADER MEMORY AND SPEED CIRCUITS.

In order to understand the electrical circuitry of the fader, it is necessary to visualize the mechanical action that takes place as a result of the electrical activations. The fader contains five electro-magnetic clutches geared together in such a manner that, when properly signaled, they will provide a relayed gear drive from the film drive gear case to the fade cam. The latter is integral with a half-revolution drum which is stopped and released by a solenoid actuated latch lever. During the 180 degree rotation of the cam, a follower moves a rod linearly, which, by a system of geared sectors and rods causes two shutter blades to open or close. The movement of the shutters is parallel with the film movement.

a. It is necessary that two clutches be energized to complete the drive to the cam, one ratio clutch plus one speed clutch. The two ratio clutches provide a 1:1 ratio and a 2:3 ratio. The three speed clutches provide lengths of 16, 32, and 64 frames at a 1:1 ratio clutch setting. Therefore, by combining either ratio clutch with any of the speed clutches, fade lengths of 16, 24, 32, 48, 64 and 96 frames may be produced. As the fader is driven directly from the film transport gear case, any printer speed used will produce the correct chosen fade length.

b. The memory situation is set up by one to three memory relays (K5-M, -N and -S) which are signaled by No. 7 channel hole combinations, the pulses reaching the fader through J202-X, -Y, or -Z. After being energized, the relays are locked-in on B+ through K5-M, -N, or -S contacts 9/5 from the normally-closed contacts of relay K2-A in the reader through J202-m.) This condition endures until a cue occurs. These relays prepare circuits to the required read-out relays (K5-J, Q or T) through K5-M, N, S, contacts 10/6 and to the latch lever actuator (L506) through K5-M or N, contacts 7/11. The read-out relays are energized on the next cue through the normally-closed contacts 9/1 of relay K5-K which is in a normal de-energized position until such a time that the cue occurs.

c. Sequencing. Since the fade length (or speed) code involves various combinations of No. 7 channel holes in the red, green and blue rows (second, third and fourth revolutions), it also is necessary to provide sequencing of the signals. The pulses are provided by pin contact S2-7A if a hole is present in the tape in that particular row (or revolution). These pulses are channeled through the contacts of relays K2-3D and 3J in the same manner as those for the light slides, zero-close and unlatch sequencing. A pulse in the second revolution energizes relay K5-S through the current limiter R506; a pulse in the third revolution energizes K5-M, while a pulse in the fourth revolution energizes K5-N. As any one of these relays is energized by the short pulse, it will be locked-in on B+ (after K2-G) by one of its own contacts. However, it must be noted that the lock-in circuit uses the 11-3 contact of K2-A which will open when a cue pulse occurs (paragraph 6-38, step d). Relays K5-M, K5-N and K5-S, being energized in various combinations, actually set up the memory situation in the fader (explained in paragraph 6-42, b). Therefore, it is necessary that the cue pulse not only utilizes the memory situation set-up, but also causes it to be eliminated immediately afterward; otherwise a fade would be retained in memory when not desired. This condition is accomplished by diodes CR507, CR508 and CR509, wired in parallel with the relay coils. The diodes hold the relay in the energized position for a long enough period after the circuit is opened for the memory circuit to be utilized. Points 1, 11 and 7 on TB501 are connected in series. Note that the MANUAL FADE

button provides the pulse only to relay K5-M and does not utilize the sequencing relay contacts. Thus the button can be used in the TEST start mode of operation in which the reader does not cycle.

d. The cue pulse to the read-out relays and to the actuator is initiated by two n.o. contacts of relay K2-A in the reader and is fed through J202-k and j.

The actuator will be energized on the cue through memory relay contacts 7/11 of K5-M or N. As the B+ locking in the memory relays is furnished by normally-closed contacts K2-A 3/11 in the reader, it can be seen that this potential will terminate as the cue pulse causes relay K2-A to energize. It is necessary therefore, to provide means for holding the memory relays in for a sufficient length of time to maintain the path set up by their contacts to read-out relays and to actuator. This is accomplished by diodes (CR-507, 508 and 509) across the coils of these relays.

e. Terminating the B+ to the locked-in memory relays on the cue pulse also erases the memory situation. As this all occurs during the first revolution of the reader, the fader memory relays are prepared for either the presence or absence of a new memory signal during the second, third or fourth revolution of the reader. The relay K5-K is energized on solid B+ very shortly after the cue pulse (a matter of a few milliseconds) by the closing of the stack switch contacts (S503), these being closed by the lifting of the latch lever as the actuator is energized. The contacts of the stack switch must close slightly before (0.025-inch) the latch lever tip clears the top of the detent.

As relay K5-K energizes, its transferred contacts 9/5 feed solid B+ from J202-g to the read-out relay, or relays that are energized, locking them in through their own contacts 9/5. The varistor (RV502, 503, 504) across their coils hold them in during the switch from the cue pulse to solid B+. Contacts of these relays set up the path to the correct clutches (L501 to 505) which are immediately energized by solid B+ from J202-g. Either K5J or Q or both read-out relays must be energized to allow B+ to reach any clutch. An example of one of the above circuits follows: Relays K5-M and J being utilized. B+ through K5-T 10/2 to clutch 4 through K5-J 10/6, K5-Q 11/3 to clutch 3. Thus, a 16-frame fade is produced. The latch lever having been lifted out of the drum detent, allows rotation of the drum and cam shaft by the energized clutches. Current limiting resistors are provided in the clutch and relay circuits to prevent overheating.

f. A spring-loaded split drum moves a segment under the latch lever the instant that it is lifted out of the detent. The possibility of the lever dropping back into the detent before the clutches have commenced the rotation of the drum is thereby eliminated. The necessity for a closely timed delay on fall-out of the latch lever solenoid for the above reason is also eliminated. The clutches, therefore, are now driving the fader cam shaft. As it is necessary to keep the clutches energized to complete the cycle, the stack switch is held in the transferred position by the latch lever riding the drum itself after the rotation has begun. At the completion of the half revolution, the drum is stopped by the lever dropping into the second detent. The stack switch, therefore, reverts to normal position and de-energizes relay K5-K, which opens the solid B+ circuit to K5-J, Q and T, causing them to de-energize. Contacts of either K5-J, Q or T relays, therefore, open the circuits to the clutches, causing de-energization. This completes the cycle.

g. If a fade is interrupted inadvertently during its cycle by a printer stop action, the cycle will be completed immediately when the printer is again started as solid B+ would still be holding the read-out relays locked-in through K5-K 9/5. Relay K5-K would not de-energize as long as the stack switch remains closed, the latch lever not being in either of the two detents. A cycle is complete when the latch lever has dropped into one of the two detents in the drum. If an interruption of the cycle is caused by a power shutdown or by switching off either the "power" or "A.C." switch, the completion of the fade cycle must be accomplished manually. This must be done before any further printing is commenced.

h. FADE INDICATOR LIGHTS. The microswitch that controls the fader lights is located on the fader shutter mechanism and is mechanically operated by the shutter mechanism. The fader indicator lights will be illuminated by A.C. Hi which is fed to the fader through P704-1, to K5-K 4/12, then to either position of S502 (fader open or fader closed) at which the fader shutters caused it to be set. It is then fed through J501-3 or 4, through J703-11 or 10 to the indicators DS603 or 604, then back through P601-J703-2 to the low side of the transformer T701 secondary (6V). The indicator light control resistor R701 regulates brilliance for the fader and speed indicators. A diode in the CLOSED light circuit prevents the DC from K2-X relay circuit in the reader from mixing with the 6V AC used for indicator circuits. The contacts 8/12 of relay K5-K in the fader are provided for safety. These contacts will open (as this relay is always energized during a fade cycle), causing the fade indicator light circuits to be inactive during the shutter movement of the fade. Consequently, neither light will be illuminated while a fade is in progress.

NOTE: Should the fader shutters stop at any point other than fully open or closed, neither indicator will be illuminated. In operation, this condition would indicate fader trouble. Use fader manual control knob to reset fader to fully open or fully closed.

i. FADE COUNTER. Each time the fade shutters open or close, S501 in the fader is actuated mechanically to allow its contacts to close. This places 117V AC -HI across the fade counter coil from J501-2 to P601-5 and causes the coil L602 to actuate. When this happens, the mechanism in the counter is advanced to the next number. Before the fade is completed, the contacts on S501 are allowed to open and

de-energize the counter coil. Fade counter reset is accomplished mechanically when the reset button is actuated.

6-43. CLOSED FADER CUT-OFF CIRCUIT.

If the microswitch S502 on the fader is at the "closed" position, AC will be fed into the reader through J701-B. This AC is rectified to half-wave DC by diodes CR202 and CR203 and will energize relay K2-X as long as contact K2-F 4/12 is closed (only when printer is in the off mode). Thus the closed fader cut-off will not affect printer operation during normal fades. However, when the printer is stopped and the fader closed, relay K2-X will be energized and contact K2-X 1/9 will be open breaking the B+ circuit to the AUTO switch on the push button panel.

6-44. PRINTING LAMP AND ASSOCIATEDCOMPONENTS.

The printing lamp receives direct current from the external 1200-watt source when connected to socket J101 on the control panel after switch S603 has been actuated to the ON position and the contacts of relay K1 have been closed. A "coarse" rheostat controls the brilliance of the printing lamp to an approximate setting. A "fine" rheostat controls the exact setting required for the printing lamp brilliance. A shunt switch, HI-LO, by-passes a resistor when closed and allows the "coarse" and "fine" rheostats to drop all the voltage required for lamp control. When the switch is open (LO position), a third resistor is placed in series with the other two for operation at low voltage settings allowing less of the load to be carried by the "coarse" and "fine" rheostats. The HI-LO switch must be in the "closed" position to obtain high voltage values at the lamp. A meter is placed directly across the printing lamp and reads actual voltage applied at the lamp.

The DC meter dial is illuminated by a luminescent substance that will glow when electrically energized. The dial illumination is controlled by a rheostat that regulates the amount of the available 117 volt AC required to energize the luminescent material to the proper level of brilliance.

Actuating switch S102 in the control panel will provide AC directly to the printing lamp meter dial illumination circuit as indicated above and also to the LAMP switch S603 on the instrument panel. Actuating LAMP switch to the closed (ON) position will energize mercury relay K1 and this relay will remain energized as long as S102 and the LAMP switch are "closed." The relay K1 contacts in the lamp DC circuit will close when this relay is energized, thus preparing the lamp circuit for operation as indicated in the preceding paragraphs. The lamp and rheostat blower motors are tied in parallel with relay K1 and will operate as long as the relay is energized.

NOTE: Contacts on relay K1 act as a safety switch to prevent DC from being applied to lamp while the blowers are not operating. These are heavy duty contacts to withstand the switching of the heavy load.

6-45. INSTRUMENT PANEL CIRCUITS.

a. Components associated with the instrument panel receive AC voltage for operation from a number of sources. A.C. Hi is also fed to this panel through J703-9 from the vane housing to the POWER switch CB602 on the instrument panel, and, when the switch is closed, will be supplied to the safe light and cue counter circuits as well as to the reader motor and printer D.C. power supply. AC-HI is supplied to the following circuits whether the POWER switch is open or closed; fade counter circuit, fade open and closed circuit, and the transformer T701. AC-LO is not controlled by the POWER switch but is present for all functions as required when SW2 in the control panel is "closed."

b. SPEED INDICATORS. One of the speed indicator lights will always be illuminated after S102 is closed in the control panel. The speed selector switch S1004 on the belt drive unit will determine the indicator in use. Placing the speed selector knob in the 60 fpm position will open the 180 fpm switch, and close the 60 fpm switch and vice versa. A.C. HI from TB102-4, fed through J104-A to S1004 will pass through either the 60 or 180 pole depending on the setting of the switch. Recall that the motor speed is selected with the same switch. The circuit then is made through either J1001-B or C, then through J107-H or L, J202-r or q, entering the instrument panel through J704-1 or 2 to light either DS602 or 601, then back through P601-2 to the adjustable R701 and to the low side of the T701 secondary. R701 allows the brightness of the indicators to be varied. Recall that relay K2-Q will also be energized by the 60 fpm line (paragraph 6-19). A diode in the speed indicator circuit blocks DC from entering the 6 volt AC circuit when relay K2-Q is energized in the reader.

c. FOOT COUNTER. A cam-operated microswitch is actuated with each revolution of the output shaft in the belt drive. This switch obtains AC from the closed torque motor circuit (see paragraph 6-28). The circuit can be traced from the switch S1003 through the vane housing and through J703-3 to the foot counter L603 and to A.C. Lo through P601-1. Actuating the coil causes the counter mechanism to advance to the next number. The counter is returned to a zero value mechanically when the reset button is actuated.

d. CUE COUNTER. Through the electrical functions in the reader, each cue causes relay K2-A in the reader to be energized, closing contacts 8/12. This allows AC -HI to be brought from the POWER switch on the instrument panel and placed across the cue counter coil to AC -LO in the vane housing through P601-1. As the coil is energized, it advances the counter to the next number. Reader relay K2-A is de-energized when the end of the cue pulse occurs and allows the coil to de-energize. The counter is returned to a zero value mechanically when the reset button is actuated.

e. HOUR METER. Time is measured only while the printer is running. With the motor switch CB603 "closed" (on), AC is obtained from the torque motor circuit in the control panel after the "start" action. (See paragraph 6-28.) No reset is provided on the hour meter.

SECTION VII
Soundhead Attachments

A. DESCRIPTION.

6202-CS/35MM SOUNDHEAD.

The soundhead is designed to be adapted to the C or MB Additive and Black-White Printers, to provide single pass picture and track printing capability. Film is transported past the aperture by a sprocket driven through a gear train from the picture head. A drum supports the negative at sprocket root height on the side opposite to the sprocket. Two apertures are provided, either one being selected by the use of a detented aperture knob (see Figure 1). The roller gate, adjusted to a slight pressure, rides the full width of the stock film, providing contact with the negative in front of the apertures.

The soundhead incorporates its own DC power source which is equipped with a constant voltage transformer and a filter choke to provide ripple free DC.

The lamp is a dual contact, G.E.#1594, 6V, 5 amp, Bell & Howell part no. 309499. The lamp socket assembly (part no. 030258) is used with this lamp.

A filter holder is provided which accommodates two 3/4-inch square gelatins one for each aperture, held in place with snap rings. If desired, additional holders may be obtained for use with various filter packs. The filter holder is detented in the correct position. It has only one position. It is removed by drawing straight out.

Provisions for the application of an air supply are incorporated. The air supply is necessary in operation as it serves a multi-purpose: lamp cooling, aperture cleaning and aid to contact.

No provisions for filtering the air supply against moisture or dirt are provided, but such equipment is highly recommended.

6101-CS/16MM SOUNDHEAD.

The soundhead is designed to be adapted to the 6100-C, or MB Additive and Black-White Printers, to provide single pass picture and track printing capability. Film is transported past the aperture by a sprocket driven through a gear train from the picture head. A drum, integral with the sprocket, supports the negative at root height across to the edge of the track aperture. The roller gate, adjusted to a slight pressure, rides the full width of the stock film, providing contact with the negative in front of the aperture.

The soundhead incorporates its own DC power source which is equipped with a constant voltage transformer and a filter choke to provide ripple free DC.

The lamp is a dual contact, G.E.#1594, 6V, 5 amp, Bell & Howell part no. 309499. The lamp socket assembly (part no. 030257) necessary for use of this lamp, will interchange with previously used sockets (prior to October 1965) which used a single contact, G.E. #1695, 6V, 5 amp lamp.

A filter holder is provided which accommodates slip-in frames that will accept 3/4-inch square gelatins. If desired, additional frames may be obtained for use with various filter packs.

Provisions for the application of an air supply are incorporated. The air supply is necessary in operation as it serves a multi-purpose: lamp cooling, aperture cleaning and aid to contact. Filters are also cooled.

No provisions for filtering the air supply against moisture or dirt are provided, but such equipment is highly recommended.

Dual Aperture Soundhead Used With Single Or 4-Way Jaw Picture Head

The dual aperture model incorporates a single aperture adjustable to two sizes by the use of a sliding edge controlled with a two-way selector knob. This model is designed for use with the single aperture and 4-way aperture picture head (one picture, two sound-REV and POS, plus composite picture and sound apertures), but may also be used with the 3-way aperture picture head. (Note: The 3-way aperture is no longer furnished on current design printers.)

In use with the single and 4-way aperture picture heads, both of which have only one size picture aperture, move the selector knob on soundhead to REV for printing on reversal material and to POS when printing on negative-positive materials. A dense stripe will then be printed between picture and track on either type of material. See Figure 2.

NOTE: In operation when the selector knob is to be moved occasionally from one position to the other, the setscrew, (1) in Figure 10, must be loose. This setscrew may be left in the loosened position.

B. INSTALLATION OF SOUNDHEAD (When soundhead has been furnished as a separate accessory.)

Remove fader drive from picture head gear case cover. (Refer to pages 71 and 72 of Printer Manual.) Remove motor and belt drive assembly. Remove picture head gear case cover. Before assembling soundhead assembly onto picture head gear case, refer to sketch "Soundhead Gear Case," Figure 3.

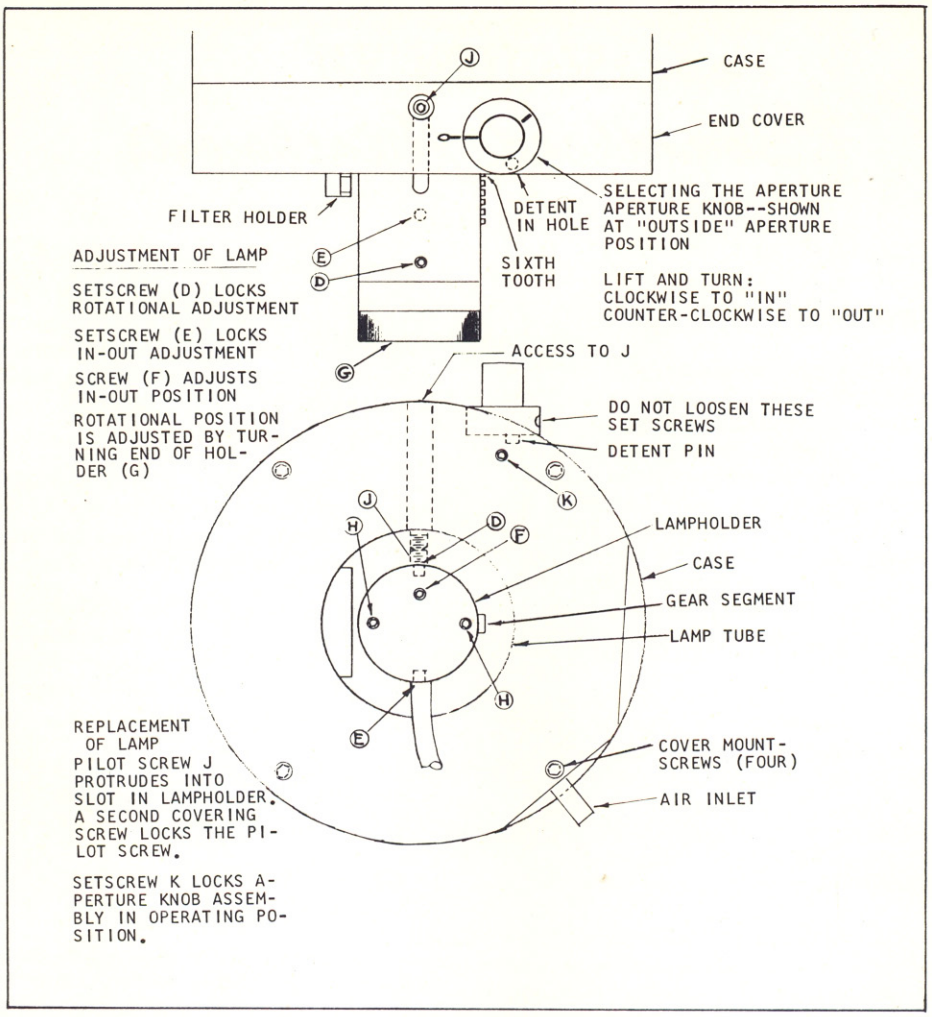

Figure 1. Selecting the Aperture and Replacing and Adjusting the Lamp (6202-CS/35MM)

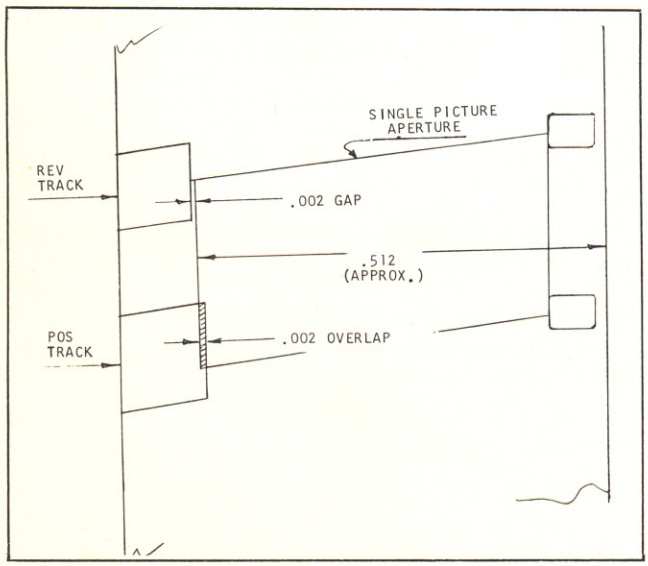

Figure 2. Aperture Locations (When Used with Single Aperture Jaw or with Single Aperture of 4-Way Aperture Jaw) (6101-CS 16MM)

(1) Remove back cover plate from soundhead gear case casting. As it will be necessary to use an Allen wrench on the screw (C) which is in close proximity to the two gears, extreme care must be exercised to prevent the wrench from striking either gear. Then proceed as follows:

(2) Loosen screw (C) slightly and swing nylon gear hanger downwards (upper gear hanger only). Do not move the lower gear hanger. Tighten screw (C) to hold hanger in this position. Mount the soundhead assembly onto the picture head gear case and tighten all mounting screws.

(3) Loosen the screw (C) and carefully mesh the nylon gear with its mating gear of the picture head. (As shown in Figure 3.) Adjust the swing of the hanger bracket so that the gear mesh at "A" exactly matches that at "B." To determine the correct mesh, match the amount of backlash.

(4) Tighten screw (C) securely.

(5) Replace back cover.

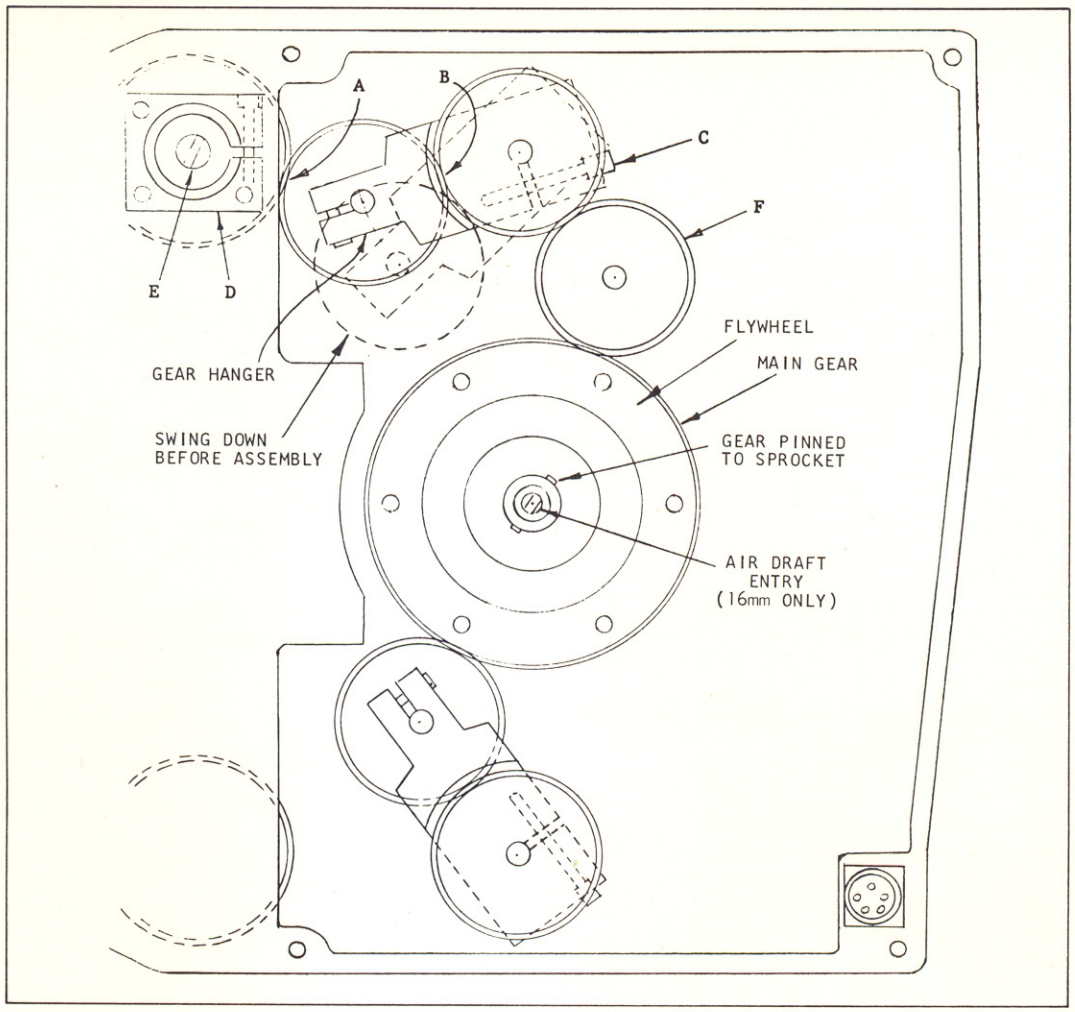

Figure 3. Soundhead Gear Case (Viewed from Rear with Cover Plate Removed)

The fader drive gear case may now be installed on the soundhead gear case casting. The adapter plate (D), is first mounted on the gear case casting. It will be necessary to locate this plate in such a position that when the fader drive gear case is mounted and clamped into the adapter plate, its driven shaft must align accurately with the mating end of the feed sprocket shaft (E). Misalignment will show up as an intermittent binding condition as the main drive gears are turned by hand (prior to connecting the fader drive shaft to the fader). The mounting screw holes in the adapter plate have sufficient clearance around the screws to allow for slight shift of the adapter plate location in order to attain the above alignment. Accurate alignment of the fader drive shaft external connecting tube with the intermediate shaft (which protrudes from the vane housing) in two planes is also necessary. Rotational adjustment of the fader drive gear case in the adapter plate, before clamping, will allow for this alignment in one plane. The fader drive gear case may be shifted outward in the adapter plate not over 1/32-inch for alignment in the second plane. Reconnect the fader drive shaft as prescribed on pages 71 and 72 of Printer Manual.

Assemble the mounting bars and power supply as shown in Threading Guide, Figure 5. Relocate the present stock take-up, mount the sound negative feed and take-up where shown in Figure 5.

C. HOLD DOWN ROLLER ADJUSTMENT (DUAL ROLLER STYLE).

These rollers should be adjusted so that when the lever is locked in its detent with roller against the film, the clearance between both rollers and the film will be identical and of the following amount:

Shall clear two films (of type being used) wrapped snugly around the sprocket.

Shall lightly contact a third layer of film added to the pack.

Procedure for Adjusting the Assembly:

NOTE: If the rollers of the assembly have not been previously aligned laterally with the sprocket (clearance channels evenly over the teeth and flanges clearing the sprocket edges), then use extreme caution that

NOTE: ROLLER GATE MAY BE SWUNG BACK AND UPWARD IN ORDER TO CLEAR THE APERTURE FOR INSPECTION, OR FOR PROJECTING THE BEAM ONTO A TARGET FOR LAMP ADJUSTMENT.

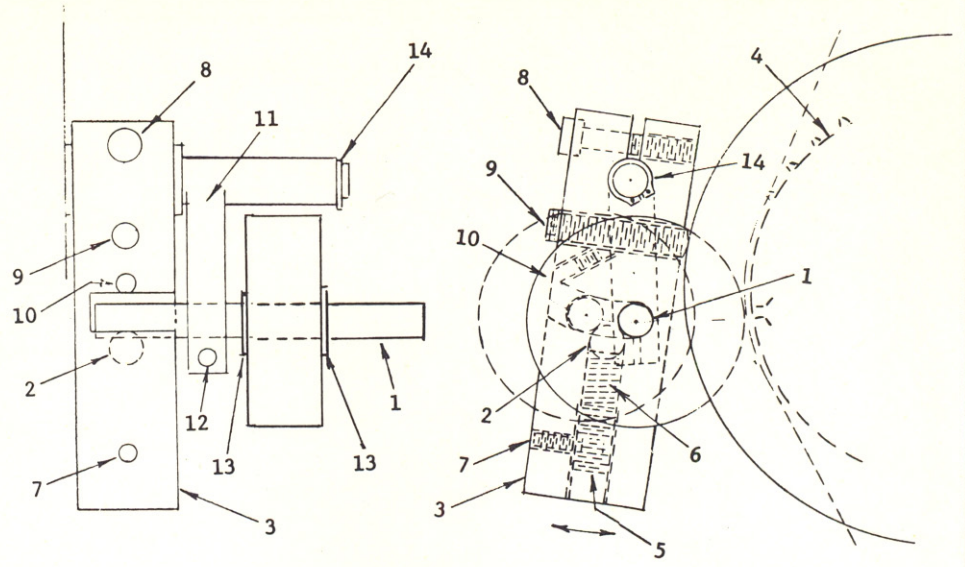

Figure 4. Roller Gate (Mounted on Permanently Lubricated Ball Bearings)

the assembly is not snapped down into its detent before making this adjustment.

(1) Loosen the setscrew holding the eccentric stud (closest to the lever pivot) and turn the stud to the position that will cause its roller to be at maximum distance from the sprocket. The stud may be rotated by the use of a screwdriver in the roller retaining screw, turning clockwise. It may be preferable to remove the entire roller and eccentric stud prior to the next step.

(2) Lock the assembly down over the sprocket (and the three films) into its detent. Adjust the clearance adjusting screw to the point at which the roller on the non-eccentric stud is lightly contacting the films. Tighten the setscrew which locks the clearance adjusting screw before this adjustment is finalized.

(3) Check the lateral position of this roller relative to the sprocket. If not exact, loosen the roller stud setscrew and move the stud in or out to effect correct position. Retighten the setscrew. Leave assembly in the locked-down position.

(4) Loosen setscrew of the eccentric stud and turn the stud to the position that will cause its roller to make light contact with the three films. This may best be accomplished if the previously adjusted roller is removed from its stud during this adjustment.

(5) Check the lateral position of the roller on the eccentric stud. Reposition if necessary. Tighten the setscrew securely.

(6) Replace the first roller, remove one piece of film and recheck the assembly adjustment. Both rollers should now clear the two films.

D. ROLLER GATE ADJUSTMENT AND REMOVAL (Refer to Figure 4.)

In operating position the roller stud (1) is trapped in the forward limit (toward the film) by the spring loaded detent ball (2). Required tension of the roller against the film is attained by adjusting the detent block (3) to the correct angular position with the roller in the forward position.

In threading position, the roller stud is pulled away from the film and will be retained in this position by the same detent ball, the stud now being behind the the ball.

Adjusting Procedure:

(1) Thread two lengths of film onto the soundhead sprocket (4), holding them both taut with the fingers or with tape.

(2) Move the roller into the operating position.

(3) The detent ball must exert sufficient tension against the roller stud in this position to hold it firmly against the forward limit (and thus against the film). This tension is adjustable by use of the screw (5) which compresses the spring (6) and is locked with screw (7). Before proceeding further, determine that the roller is spaced over the picture and track area of the film and is in close proximity to the teeth, but not touching. A small mirror may be used for this observation. The roller stud (1) is adjustable laterally in the gate arm (11) and is locked with screw (12). Retaining rings (13) hold the roller in position on the stud.

(4) Loosen the screw (8) slightly and back-off the detent block (3) a few degrees.

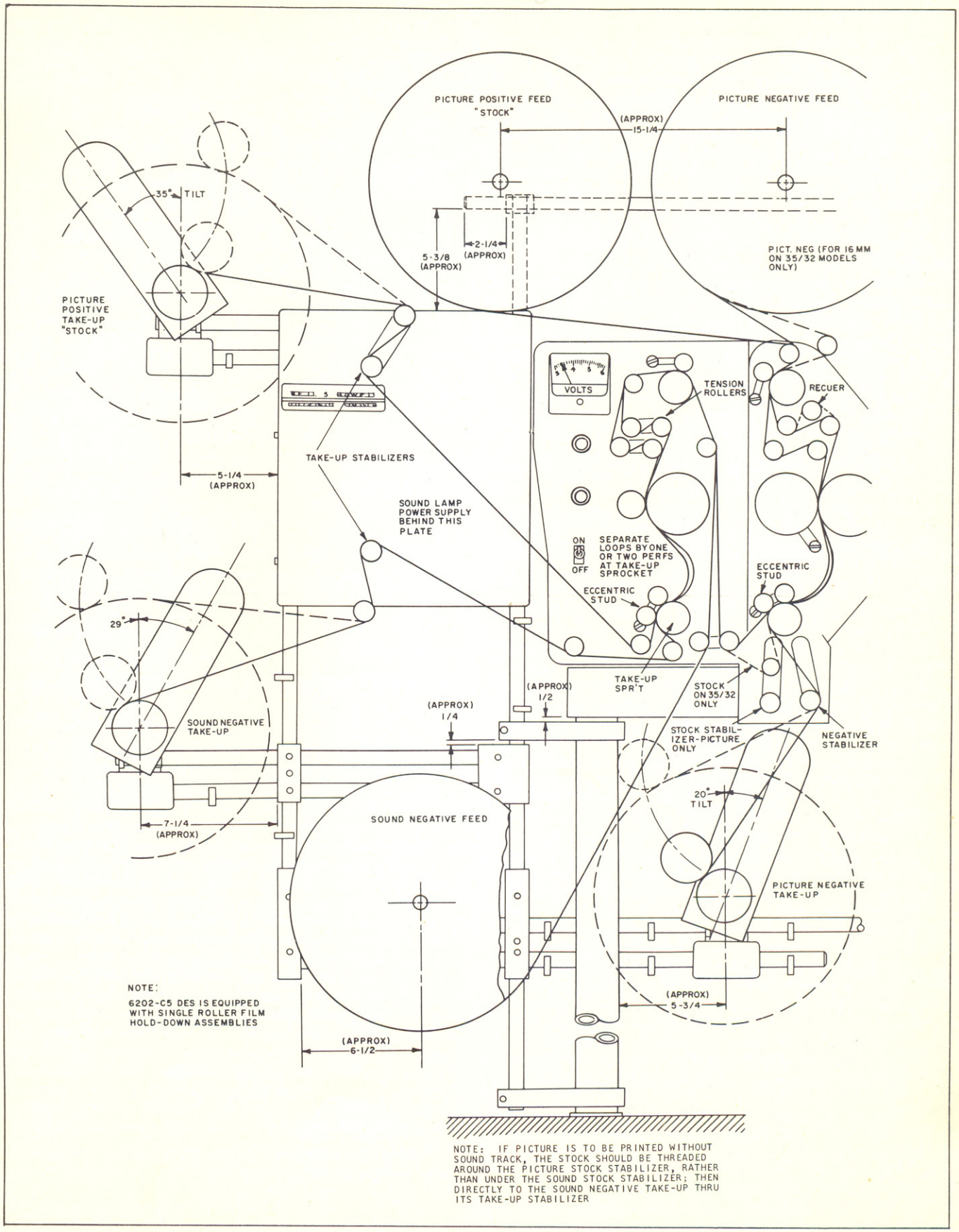

Figure 5. Soundhead Installation and Threading

(5) Insert a 0.0015-inch or 0.002-inch shim between the tension adjusting screw (9) and the soundhead case, then firmly press the detent block forward trapping the shim. The above screw (9) is locked with the screw (10).

(6) By turning the screw (9) inward and maintaining pressure of the detent block against the shim (without denting the latter) the angular position of the block will be reached to cause the roller to clear the two films when spun.

(7) Now turn screw (9) outward in small increments while spinning the roller. Lock the adjusting screw with screw (10) at the point where the roller is lightly contacting the film. Maintain pressure against shim during adjustment.

(8) Remove the shim and press the detent block forward, making the contact of the adjusting screw with the case. Lock the block in this position with screw (8).

Removal Procedure:

The gate arm (11) and roller assembly may be slipped off of its pivot stud after removing the retaining ring (14).

E. THREADING AND SYNCHING AND TENSION ROLLER ADJUSTMENT

(1) Printer with soundhead is threaded as shown in threading guide (Figure 5). Note the free loops of film beneath main sprocket. To attain correct loops, draw both films taut between printing sprocket and take-up sprocket, allow engagement on closest tooth without stretching, then back-off negative three perfs and the stock two perfs. Tension rollers are set to attain synch at the sound aperture and at upper feed sprocket when film is threaded with indicator pointers matching their respective indices.

(2) Punch through both films together adjacent to feed sprocket and advance film drive to check synch at the printing aperture. If synch is prevalent, proceed with tension check of tension rollers (Step 3).

(3) Remove film from soundhead.

(4) Loosen tension roller retaining screw two turns.

(5) Attach a 20 ounce capacity Chatillon scale to each tension roller individually, using a string loop to connect the scale to the loosened roller screw.

(6) Lifting the scale vertically, raise the roller until the pointer aligns with its respective index mark. Read the tension at this condition. Negative roller tension: 18 oz. ± 1/2 oz. Stock roller tension: 16 oz. ± 1/2 oz. If synch is not prevalent, it will be necessary to reset position of tension rollers and limit cases to attain exact synchronization, followed by resetting tension springs. This is accomplished in the following manner (see Figure 6).

(7) Loosen limit case screws.

(8) Commence threading and synchronize the two films at the feed (upper) sprocket, engage on the sprocket and close the hold down roller.

(9) Continue normal film threading onto the printing sprocket. Engage films on the take-up sprocket and lock with the hold down rollers. Thread films around the rollers beneath the sprocket.

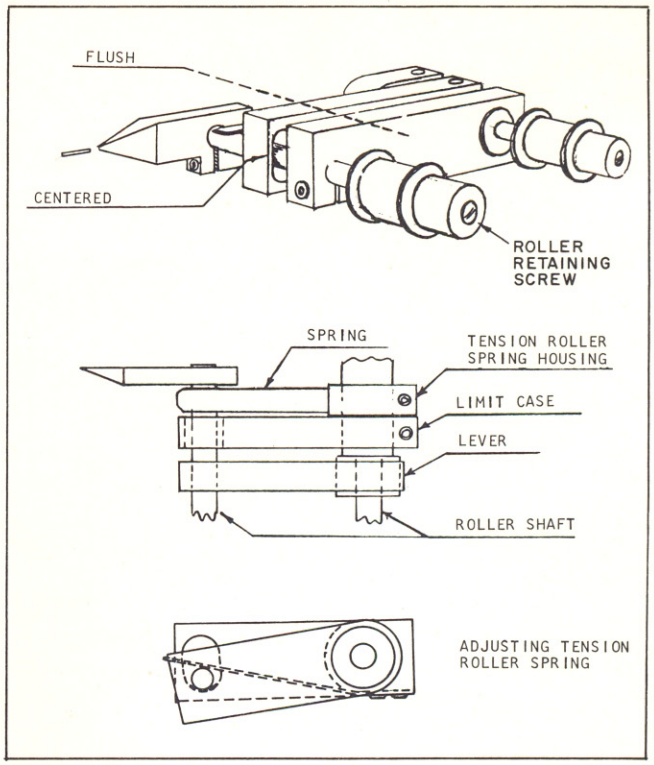

Figure 6. Tension Roller Adjustment

(10) Check synchronization again at the aperture, noting how many perfs and in which direction synch is displaced.

(11) Make the necessary shift in perf engagement on the main sprocket to attain synch.

(12) Adjust the limit cases so they are exactly flush across the tops with the tension roller levers and lock them in place. The roller shafts will now be midway within the limit case openings.

(13) Reset pointers to align them with respective indices on the decal. Lock the pointers in place.

(14) Reset tension of the tension roller spring in the following manner after again removing the film.

(15) Reset spring to attain a basic setting with tension rollers at rest within limit cases by loosening spring housing lock screw and resetting housing until spring contacts tension roller shaft with a slight pressure. Retighten the screw.

(16) Measure tension of each roller lever (as in step 3 to 6 above) and readjust the spring housings until the tensions indicated are attained when pointers are aligned with their respective index marks.

F. SELECTING THE APERTURE (6202-CS/35 MM ONLY) (See Figure 1).

Lift aperture knob and turn counterclockwise to the outside aperture position, or clockwise to the inside aperture position. The knob will drop into a detent in either position as one or the other of its index marks aligns with the index on the case as the lampholder moves inward or outward to the selected position. At

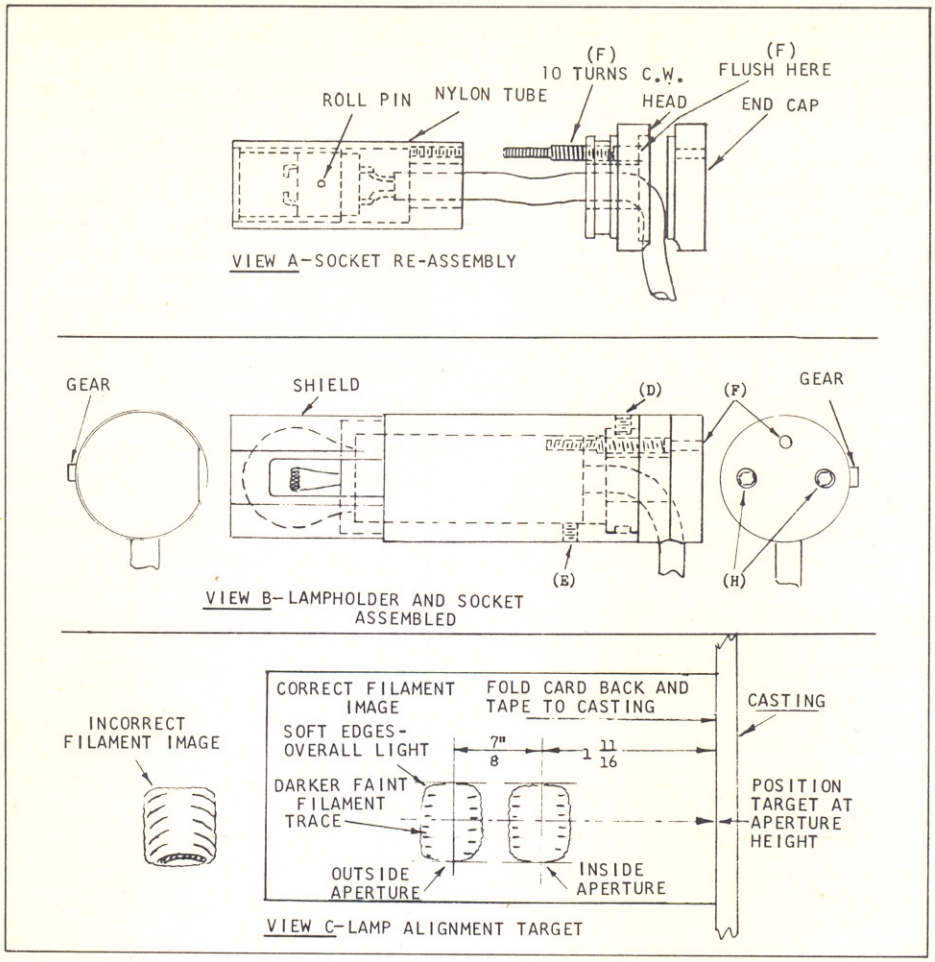

Figure 7. Lampholder Assembly and Lamp Alignment (6202-CS/35 MM)

the outside position, the beam is blocked from the inside aperture by the shield over the lamp. The pilot head setscrew (J) extends into a slot in the lamp tube, limiting the movement of the tube as the aperture knob is rotated, thereby preventing disengagement of the knob gear and gear segment on the lampholder. One turn from bottoming in the slot is the correct setting for the pilot screw. A covering setscrew locks the pilot screw in its set position.

G. REPLACEMENT OF THE LAMP (6202-CS/35MM) (Figures 1 and 7).

Disassembly:

It is necessary to remove the lampholder from the lamp tube. This requires disengagement of the aperture knob gear from the lampholder gear segment. Proceed as follows:

(1) Loosen setscrew (K), using 3/32-inch Allen wrench.

(2) Lift aperture knob assembly upward approximately 1-1/2 inches.

(3) Remove the covering setscrew above the pilot screw (J) and then loosen (J) five turns, or until the pilot has cleared the slot in the lampholder. These screws are the same size as screws, (D), (E) and (F).

(4) The lampholder may now be drawn out of the brass tube.

(5) Referring to Figure 7B, note the shield which is fitted over the lamp snugly onto the end of the holder.

(6) Draw the shield off of the holder carefully and replace the lamp. The shield is a slip-fit over the end of the holder.

Reassembly:

(1) Replace the shield on the holder, matching the flat side of the shield and holder.

(2) Slide the holder back into the brass tube, fitting the gear segment into the slot in the tube.

(3) Press the holder inward to the exact position at which the sixth tooth (from front) is just outside the front surface of the case.

(4) Slowly depress the aperture knob assembly downward, with the knob turned to the exact position shown in Figure 1 ("outside" position). The gear will now engage with the segment on the lampholder and the detent pin will drop into the detent hole at the same time.

(5) Tighten setscrew (K) securely; then shift aperture knob into each position, noting that the sixth tooth is again in the above noted position when knob is shifted to the "outside" position.

(6) Finally, reset the pilot setscrew (J) as outlined in preceding paragraph F, locking it with its covering setscrew.

Alternate Method of Disassembly and Reassembly of the Aperture Knob Gear and Lampholder Gear Segment:

(1) Do not loosen setscrew (K).

(2) Remove the covering setscrew above (J) and loosen (J) five turns.

(3) Lift the aperture knob (as in selecting the aperture) and turn it counterclockwise until the gears are out of mesh. The lampholder may then be drawn out of the tube.

(4) On reassembly, press the lampholder into the tube gently, while again lifting the aperture knob and allowing it to turn when the gears go into mesh.

NOTE: It will be necessary, however, to determine that the knob will drop into the "in" position when the lampholder is actually in that position. This may be ascertained to be the case whenever the screw (D) is halfway beneath the front surface of the case. Again lifting the knob and setting to the "outside" position should place the sixth tooth in the checking position, as outlined in the previous procedure.

(5) If the correct mesh has not been obtained, disengage the gears again and attempt a new remesh by turning the knob slightly one way or the other, as required, before the gears mesh.

(6) When correct mesh is attained, reset the pilot setscrew (J) and lock it with its cover screw.

6101-CS/16 MM (Figure 8)

The lamp is a G.E. #1594, 6V, 5 amp dual contact, 100 hour Bell & Howell part no. 309499. Loosen the thumbscrew (4) on right side of lamphouse cover plate and withdraw lampholder. Replace the lamp. Notice that lamp may be inserted in two positions, 180 degrees opposed. Reinstall lampholder, pressing firmly against cover plate while tightening thumbscrew (4). Check the lamp alignment as follows:

(1) Remove filter holder and turn lamp on. Filter holder is retained with a thumbscrew. Fasten a white card to the gear case with tape in such a position that the filament image is projected onto the card at 90 degrees and approximately 2 or 3 inches in front of the aperture. When correctly aligned the filament image will appear to be centered laterally within an unsharp halo of light completely surrounding it and centered or slightly above center vertically (see (A) Figure 2).

(2) If the image appears to be not centered laterally within the halo, it will be necessary to readjust the lamp socket tube in or out within the lampholder. This adjustment should be made first. If the image appears to be closer to the bottom of the halo, remove the lamp and reinsert 180 degrees opposed in the socket. If the image is not approximately centered vertically and shaped within the halo as pictured in Figure 2 (A), it will require rotational adjustment. If the filament image cannot be separated from the halo rim at top or bottom during adjustment, the lamp should be discarded and another one inserted. If the image appears to have a very dark lead-in coil, it will require rotational adjustment (see (C) Figure 2).

H. ADJUSTMENT OF LAMP (6202-CS/35MM) (Figures 1 and 7).

(1) Remove filter holder and lift roller gate (see paragraph D and Note on Figure 4).

(2) Prepare a target on stiff white paper, as shown on Lamp Alignment Target sketch (Figure 7C). Tape target to gear case about 3 inches in front of apertures.

(3) Lift and turn the aperture selector knob to the "outside" aperture position.

(4) Two lamp adjustments are provided: (1) in and out movement of lamp and (2) rotational movement of

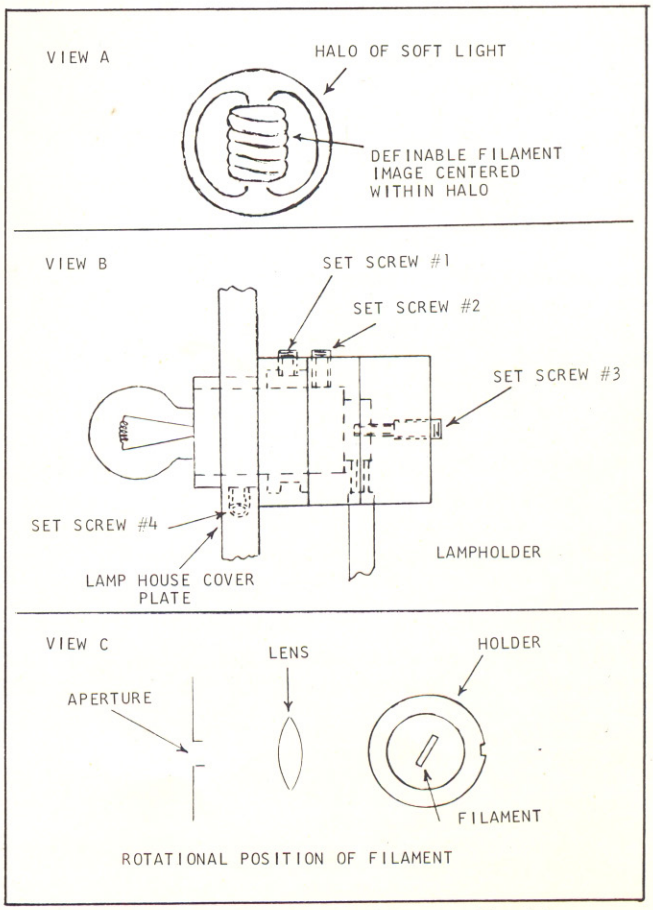

Figure 8. Replacement of Lamp, Checking Alignment and Adjustment of Lamp (6101-CS/16MM)

lamp. Both adjustments must be made with the lamp lighted and with the "outside" aperture in printing position (lamp tube will be in the "out" position).

IN and OUT Movement of Lamp (Figure 1).

(Affects lateral position of filament image.) As the cable must move during this adjustment, it may be necessary to loosen the end cap screws (H) slightly. With the lampholder detented firmly in place, loosen setscrew (E) three-quarters turn with (D) locked. Turn screw (F) clockwise to move lamp in, or turn counterclockwise to move lamp out. When filament image appears shaped as shown and is located at the indicated position on the target, lock setscrew (E). When the selector is turned to the "inside" position, the filament image will then coincide with the inside aperture on the target.

Rotational Movement (Figure 1).

(Affects filament image vertical shape and height). With the lampholder firmly in place, loosen setscrews (D) and (E) one-half turn. Have target card in place. Turn outer end of lampholder (G) either clockwise or counterclockwise until the filament image appears as shown in sketch. Retighten setscrews (D) and (E).

NOTE: When making either of the above adjustments, each will be independent of the other adjustment, except that the IN and OUT adjustment (lateral position) should be made first. Note also that setscrew (E) locks both adjustments.

6101-CS/16 MM (Figure 8).

The following adjustment procedures should be utilized whenever a new printing lamp is installed.

a. Remove filter holder and turn on the lamp.

b. Wrap a piece of 35-mm rawstock around the front of the soundhead casting to serve as a target for checking the filament image. (This will prevent the image to be viewed from the side away from the lamp).

c. Place the POS-REV control in the POS position.

d. Check the filament to insure that it is centered laterally in the aperture. If image is off-center, adjust as follows, using Figure 8 as a reference.

(1) With lampholder firmly in place and screw #4 tightened, loosen setscrew #2 three-quarters turn.

(2) Turn screw #3 clockwise to move lamp in, or counterclockwise to move lamp out.

(3) When filament image is centered in the aperture, tighten setscrew #2 securely.

e. Adjust the filament image for uniformity by performing the following adjustment.

(1) With lampholder firmly in place and screw #4 tightened, loosen setscrew #1 one-half turn.

(2) Turn knurled portion of lampholder in either direction until filament images overlap or blend together; then tighten setscrew #1.

I. REPLACEMENT OF LAMP SOCKET.

6202-CS/35MM (Part No. 030258).

The assembly consists of a metal encased, dual contact socket with attached cable, assembled within a nylon tube. These parts are permanently pinned together with a roll pin. The lamp used is a G.E. #1594, 6 volt 5 amp, dual contact, part no. 309499.

Disassembly:

(1) Remove the lampholder (Figure 7B) from the soundhead case. Refer to paragraph G (Replacement of the Lamp) for procedure.

(2) After removing the shield and lamp, remove the end cap from lampholder (2 screws - (H)); then remove lamp and separate the nylon tube from the head by turning screw (F) clockwise.

(3) It is recommended that the present cable be cut approximately 2-inches outside of its entry into the gear case casting and a small sized 2-wire disconnect be installed on the cable, otherwise it will be necessary to remove the cable from the socket lugs and resolder to the new socket. The female section of the disconnect should be installed on the end of the cable from the power supply. Such a disconnect is not presently furnished.

Reassembly:

(1) Thread screw (F) into head until the end of the screw is flush where shown in Figure 7A. Then turn screw clockwise ten turns.

(2) Insert cable through the hole in the head.

(3) Holding the nylon tube and socket in position to thread screw (F) into the tapped hole in the tube, turn the screw counterclockwise while carefully threading it into the hole. Continue turning until the end of the screw is again flush with the outer surface of the head.

(4) Insert the nylon tube and head into the lampholder and snug up the setscrews (D) and (E).

(5) Reinstall the end cap while dressing the cable into the opening provided. Use slight pressure inward on the cable while tightening the end cap screws.

(6) Insert a lamp into the socket and replace shield.

(7) Reinstall the lamp tube into the sound case. Refer to paragraph G (Replacement of the Lamp) for procedure.

(8) Install the male section of the disconnect onto the cable from the lampholder, cutting it to such a length that it may be properly dressed and clamped to avoid interference with the film.

(9) Adjust lamp as instructed in paragraph H.

6101-CS/16 MM (Part No. 030257).

The lamp socket assembly (part no. 030257) consists of a metal encased, dual contact socket with attached cable, permanently installed and pinned within a nylon tube. The lamp is a G.E. #1594, 6V, 5 amp.

Disassembly (See Figure 9).

(1) Remove lampholder and attached cable from soundhead aperture housing and remove lamp.

(2) Remove the two mounting screws from lampholder head.

(3) Remove pilot head setscrew No. 1 and slide bushing away from center section.

(4) Loosen setscrew No. 2 two turns.

(5) Slide the center section off of the socket assembly by pressing the thumb against the open end of the socket while pushing the center section toward the thumb.

(6) Separate the nylon tube and socket from the head by turning screw No. 3 clockwise.

(7) Discard old tube, socket and cable.

NOTE: It is recommended that the present cable be cut approximately 2-inches outside of its entry into the gear case casting and a small sized 2 wire disconnect be installed to join the cables at this point. Otherwise it will be necessary to remove the cable from the lamp socket lugs and resolder to the new socket lugs.

Reassembly (See Figure 9).

(1) Thread screw No. 3 into head until outer end of screw is flush with outer surface of head, then turn screw in (clockwise) 4 turns (see Figure 9).

(2) Holding screw No. 3 in this position with an Allen wrench, turn the nylon tube and socket onto the screw (left-hand thread) 6 turns, or until it is in the position shown in Figure 9. Hold the cable snug against tube while threading to prevent loosening the soldered cable leads. Also use caution in threading socket onto the screw as the socket material is rather soft.

(3) Place the cable into the slot as shown and assemble center section of the holder onto the head and tighten the two mounting screws in place after pushing the cable into the assembly slightly to allow some slack for adjustment movement.

(4) Assemble the bushing over the tube and onto the center section. Insert setscrew No. 1. Rotate the bushing so that as its keyway aligns with the key in the cover plate opening, the cable will be at the bottom. Then draw both No. 1 and No. 2 setscrews up to snug.

(5) Insert new lamp and install the lampholder into the aperture housing, tightening the knurled screw to hold it in place.

(6) Connect the cable (see NOTE following Disassembly procedure).

(7) Proceed with lamp adjustments as outlined in paragraph H.

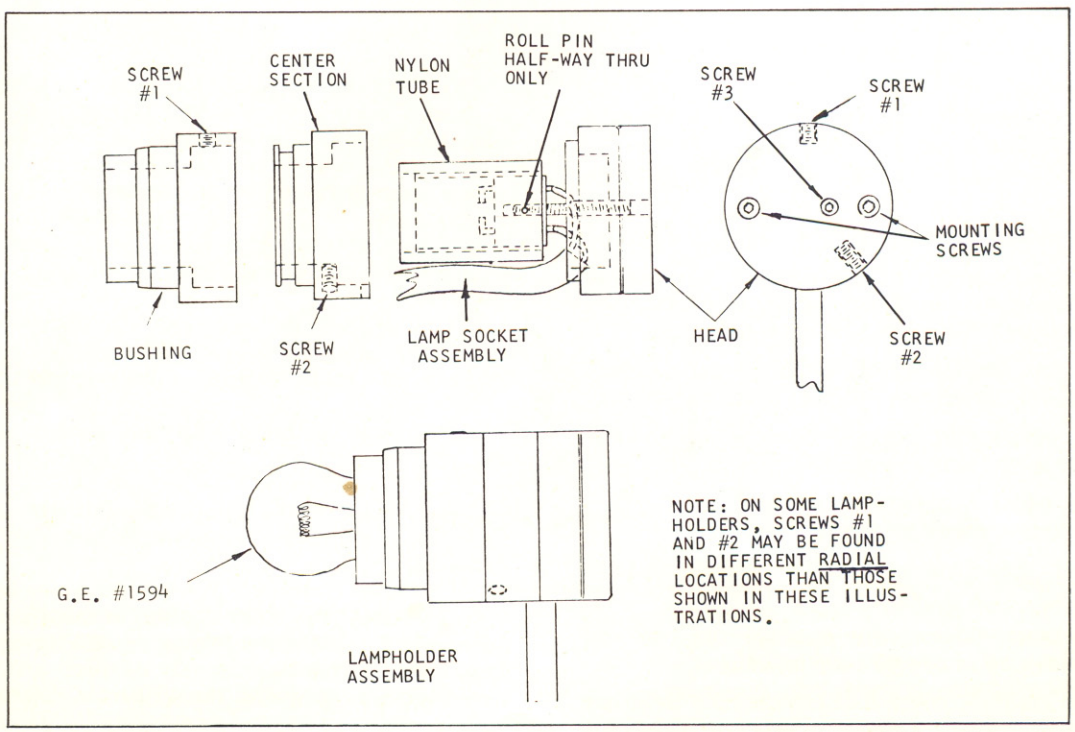

Figure 9. Replacement of Lamp Socket Part No. 030257 (6101-CS/16 MM)

J. DUAL APERTURE WIDTH ADJUSTMENT (6101-CS/16MM ONLY) (Refer to Figure 10).

Procedure for effecting an exact width of the aperture in case the gap and overlap between track and picture areas are not as desired. Each adjustment affects both POS and REV apertures and to the same amount.

To Make Apertures WIDER:

(1) Set selector in center, tighten setscrew (1).

(2) Loosen the two 10-32 socket head screws (2) one-half turn.

(3) Loosen setscrew (3).

(4) Move selector toward REV position the desired amount. A movement from center to the limit will change the width dimension approximately 0.0025-inch.

(5) Tighten setscrew (3).

(6) Loosen setscrew (1).

(7) Tighten the two 10-32 socket head screws (2).

NOTE: Setscrew (1) must be loose when shifting the selector from POS to REV or vice-versa during printing operations.

To Make Apertures NARROWER:

(1) Set selector in REV position, tighten setscrew (1).

(2) Loosen the two 10-32 socket head screws (2) one-half turn.

(3) Loosen setscrew (3).

(4) Move selector toward POS position the desired amount. A movement from REV to center will change the width dimension approximately 0.0025-inch and from POS to the REV limit approximately 0.005-inch.

(5) Tighten setscrew (3).

(6) Loosen setscrew (1).

(7) Tighten the two 10-32 socket head screws (2).

To Check Results of Aperture Width Adjustment:

A test may be made on black and white film. Print through some cleared stock to simulate the negative effect on illumination as pertains to light spread at each edge. Obtain a normal density to eliminate spread at the edges due to over exposure.

(1) Commence printing with both picture and sound lamps on and with sound aperture set at REV.

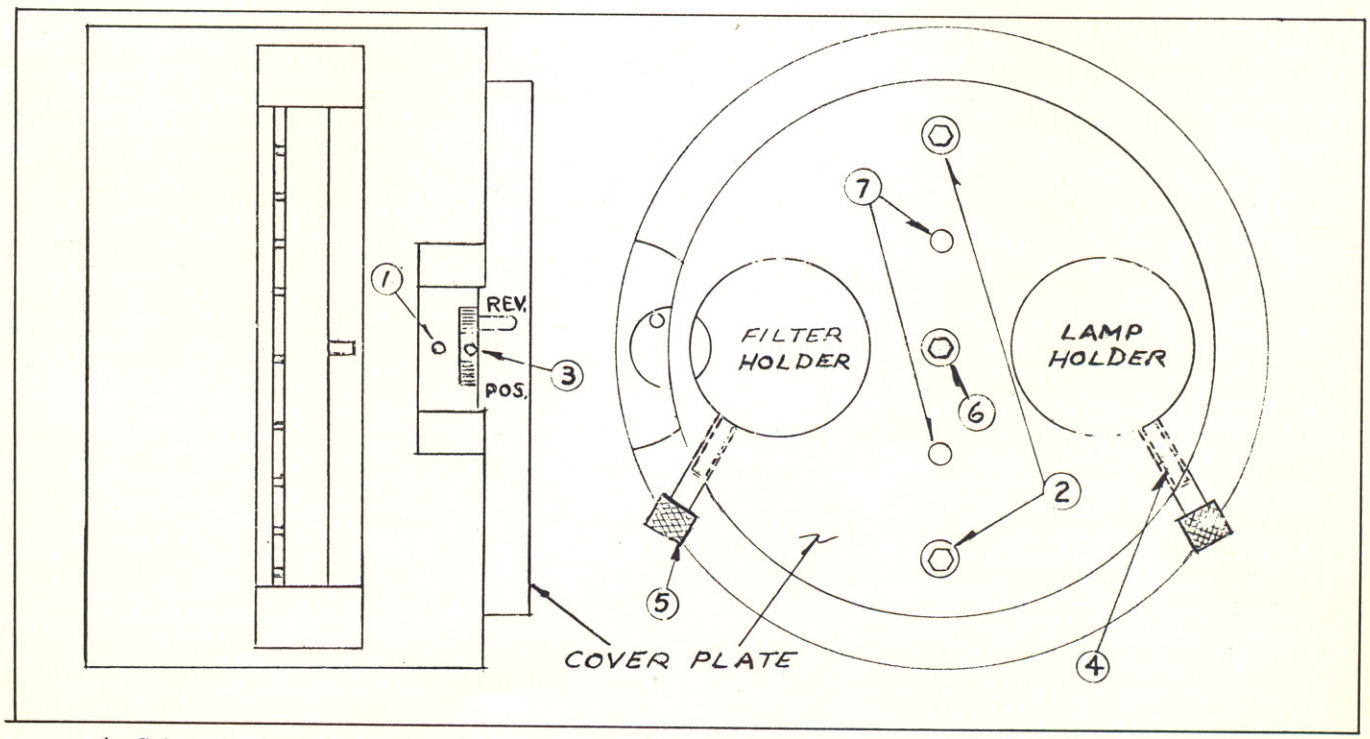

1. Setscrew, Aperture width adjusting
2. Screws, Cover plate mounting (2)
3. Setscrew, Aperture width adjusting
4. Thumbscrew, Lampholder retaining
5. Thumbscrew, Filter holder retaining
6. Screw, Condenser barrel mount retaining (on cover plate)
7. Dowel, Condenser barrel mount alignment

Figure 10. Soundhead Aperture Housing (6101-CS/16 MM)

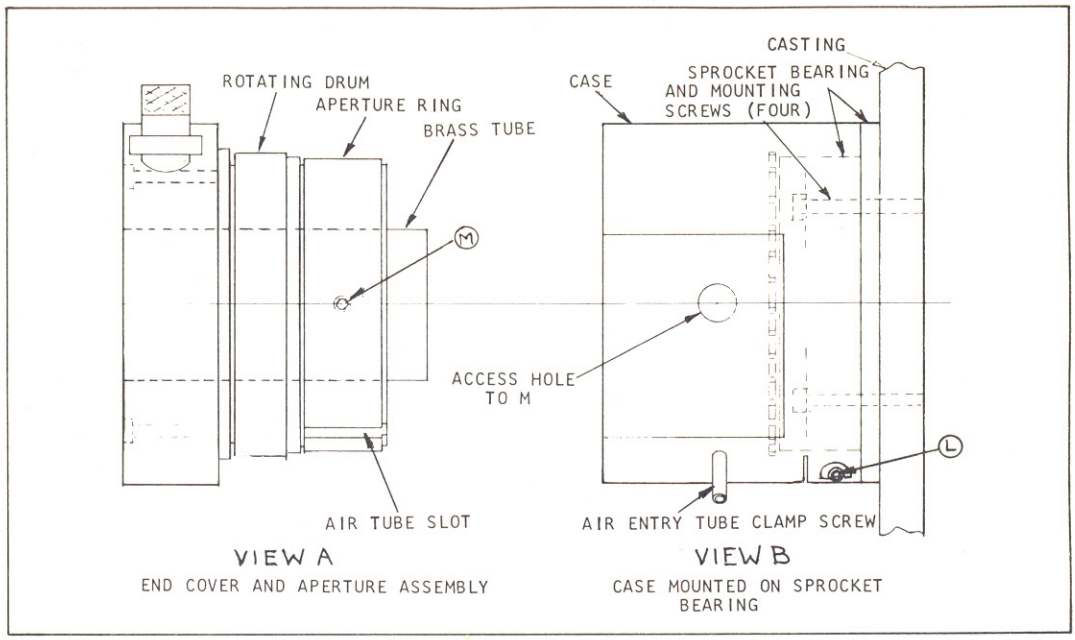

Figure 11. Access to Condensers and Drum Bearing (6202-CS/35 MM) (Sheet 1)

(2) Print about 5 feet.

(3) Turn picture lamp off and quickly shift sound aperture to POS. Print about 4 feet and stop.

(4) The film will portray the REV track alone, REV and picture, POS and picture and POS alone.

K. ACCESS TO CONDENSERS.

6202-CS/35 MM (See Figures 11 and 12).

To gain access to the two condensers, it is necessary to:

(1) Remove the lampholder and filter holder from lamp tube.

(2) Remove the end cover and aperture assembly (a complete unit) from the case.

(3) Remove the aperture ring from the end cover and aperture assembly.

Procedure for Disassembly (See Figures 11 and 12).

(1) To remove the lampholder from lamp tube refer to paragraph G.

(2) To remove the end cover and aperture assembly, remove the four cover mounting screws and draw the assembly straight out. The assembly will appear as in Figure 11, View A.

(3) The case is clamped to the sprocket bearing assembly with screw (L) and should not be removed as it is radially oriented to position the apertures correctly. (See Figure 11, View B.)

(4) Loosen the setscrew (M) two turns and draw the aperture ring off of the brass tube (Figure 11, View A).

(5) The condensers will now be accessible for cleaning. The rear side of both glasses may be reached through the open end of the brass tube (Figure 12).

(6) If it is desired or necessary to remove the condensers, the rotating drum may be drawn off of the brass tube. The condensers are held in place with two screws for each. Note that the retaining springs for the glass is on the outside. Glasses are identical and have the same curve front and rear (Figure 12).

Procedure for Reassembly (See Figures 11 and 12).

(1) Slide the rotating drum back onto the brass tube. The inner race of the bearing butts against a shoulder of the end cover. These two surfaces are indicated by X and X_1 on Figure 12.

(2) Slide the aperture ring back onto the brass tube. A shoulder of the ring butts against the inner race of the bearing. These two surfaces are indicated by Y and Y_1, on Figure 12.

(3) Rotate the aperture ring to the approximate position it should assume on the tube.

(4) Insert the reassembled end cover and aperture assembly back into the case, feeding the air tube slot in the aperture ring over the air tube which protrudes inside the case (Figure11). The fit of the tube in this slot is quite tight and will orient the aperture ring radially to the required position.

(5) As contact of the end cover is made with the case, rotate the end cover as necessary to allow the

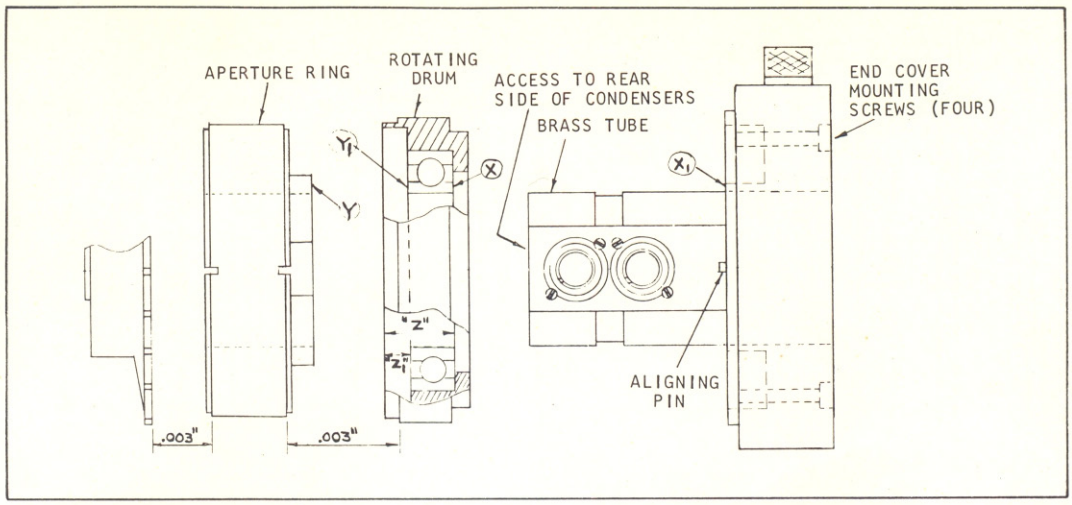

Figure 12. Access to Condensers and Drum Bearing (6202-CS/35 MM) (Sheet 2)

aligning pin to fit into the pin hole in the case (Figure 12).

(6) The end cover mounting screws may now be inserted and drawn up. Insert an Allen wrench into setscrew (M) through the access hole in the case (Figure 11).

(7) Then with the fingers, press the aperture ring toward the rotating drum. Next, tighten setscrew (M) firmly. It might be desirable to use a 0.003-inch brass shim between the aperture ring and the sprocket to assist in holding the ring toward the rotating shoulder while tightening the screw. The specified gaps for the completed assembly are indicated on Figure 12.

(8) Reinstall the lampholder (refer to paragraph G) and the filter holder.

6101-CS/16 MM (See Figures 10 and 13).

Remove filter holder and lampholder. Remove the cover plate from the aperture housing. The condenser barrel, retained in its mount, is fastened to the inside of the cover plate.

NOTE: Lock the setscrew (1) before removing cover plate to prevent the selector assembly from springing out of its cavity, as it is under spring tension. The condenser barrel is held in place with a setscrew (9). It may be marked for position and then removed to clean the lenses.

The condenser is correctly positioned when the end of the barrel (away from the aperture) is 1/8-inch from the straight edge of the cavity within which the condenser is mounted. The retaining ring and spring should be in the end of the barrel away from the aperture.

L. SOUND DRUM DISASSEMBLY.

6202-CS/35 MM.

To gain access to the rotating drum bearing, it is necessary to follow the disassembly procedure outlined in step K, preceding, and remove the rotating drum from the end cover and aperture assembly.

If it has become necessary to replace the bearing, measurements should be taken from each side of the inner race to the edge of the rotating drum prior to removal of the bearing from the drum. These distances are indicated by "Z" and "Z_1" on Figure 12.

It is quite necessary that these dimensions remain identical to maintain the correct gaps between the sprocket and aperture ring and between aperture ring and rotating drum. It may be necessary to select the new bearing to obtain the identical dimensions. It is also possible to obtain different dimensions by turning the bearing over.

6101-CS/16 MM.

Should it become necessary to gain access to the ball bearings (lubricated for life), the following procedure should be followed: Refer to the exploded view of the sound drum, Figure 13, which illustrates the components named in the disassembly steps.

(1) Remove filter and lampholders (Figure 10).

(2) Remove aperture housing (12, Figure 13) by loosening screw (item 15, Figure 13).

(3) Remove back cover plate from soundhead casting (Figure 3).

(4) Remove taper pin and gear, leaving flywheel mounted on gear.

(5) Remove sprocket and shaft from front side, leaving film support mounted on sprocket.

(6) Bearings may be removed without removing the bearing tube from the casting. Bearings are retained in the bearing tube with an internal "O" ring on the sprocket side and a retaining plate on the gear side.

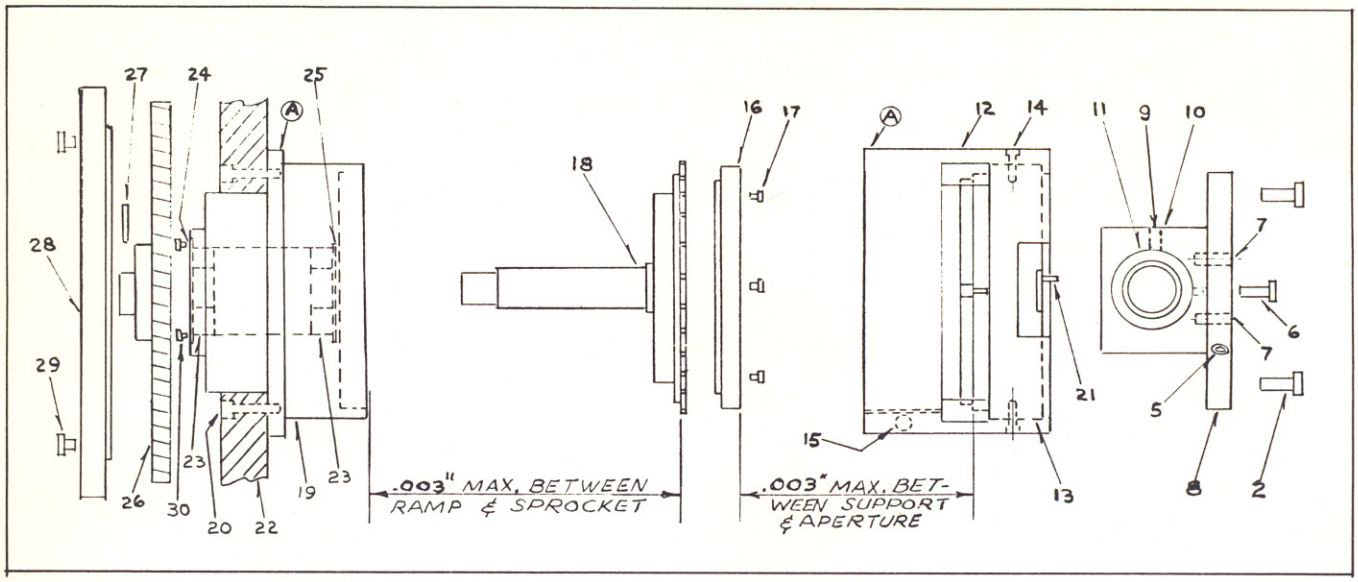

(A) Index marks on bearing tube flange and aperture housing must match for correct aperture position.

2. Screws, Cover plate mounting (2)
6. Screw, Condenser barrel mount retaining (on cover plate)
7. Dowel, Condenser barrel mount alignment
8. Plate, Cover
9. Setscrew, Condenser barrel retaining (in mount)
10. Mount, Condenser barrel
11. Barrel, Condenser
12. Housing, Aperture
13. Ring, Aperture
14. Screws, Aperture ring retaining (to housing) (2)
15. Screw, Clamp (opposite aperture side) - aperture housing retaining (to bearing tube)
16. Support, Film
17. Screws, 4-40 x 3/16-inch (special) (4), film support retaining (to sprocket)
18. Sprocket and Shaft
19. Tube, Bearing
20. Screws, Bearing tube retaining (to casting) (4)
21. Selector, Aperture
22. Casting
23. Bearings, Barden SR10SS3 (2)
24. Plate, Bearing retaining
25. O-Ring, Internal, bearing retaining
26. Gear
27. Pin, Taper
28. Flywheel
29. Screws, Flywheel retaining (6)
30. Screws, Plate retaining (4)

Figure 13. Soundhead Drum (6101-CS/16 MM)

(7) On reassembly, the sprocket with the gear properly pinned onto its shaft, will maintain the correct gap between itself and the sprocket bearing.

(8) It will be necessary to measure a 0.003-inch to 0.005-inch gap between the film support and the aperture ring when reinstalling the aperture housing onto the bearing tube. At the same time the radial position of the housing on the tube must be set by means of matching the two index marks (A).

(9) When the correct gap and radial position is attained, the housing is clamped in place with the screw (15).

M. ELECTRICAL CIRCUITRY.

Electrical schematics for the soundhead and its power supply are furnished in the Printer schematic package, part of the Printer Manual, Drawings 034422 and 034410.

N. LUBRICATION OF THE SOUNDHEAD.

No lubrication required on any part of the soundhead except for light grease on the gears.

SECTION VIII

Reader and Tape Punch Maintenance

This Section has separate page numbers not shown in the Table of Contents. This is a description and lubrication guide for those areas of the reader, tape punch, and tape checker-duplicator manufactured by the Friden Company.

Motorized Tape Reader

Customer Service Manual

Table of Contents

Description 3
Specifications 3
- Tapes Used 3
- Hole Size 3
- Hole Spacing 3
- Feed Hole Location 3
- Operating Speed 3
- Clutch 4
- Tape Reader Contact 4
- Tape Check Mechanism 4
- Motor Drive 4
- Auxiliary Contacts 4
- Reader Mounting 4
- Control Switches 4
- External Connections 4
- Tape Unwind 5
- Tape Rewind 5
- Auxiliary Equipment 5
- Half-Speed Cam Contacts 5

Sequence of Operation 6
Removal and Assembly of Tape Reader 9
- Removal of Tape Reader 9
- Removal of Contact Lever and Bracket Assembly 9
- Removal of the Operating Cams 12
- Removal of a Reader Pin 12
- Removal of Tape Feed Shaft 12

Adjustments of the Tape Reader 12
- Speed Adjustments 12
- Tape Registration Adjustments 12
- Clutch Mechanism 13
- Contact Adjustments 14

Clutch Shaft 16
Clutch Pulley 17
Tape Rewind 18
Auxiliary Contacts and Cams 19
- Removal, Assembly and Adjustment 19
- Adjusting the Contact to the Cam 19
- Adjusting the Cam Position on Shaft 19

Circuit Description 21
- Motor Circuit 21
- D.C. Power Supply 21
- Reader Control Circuit 21

Lubrication 23

Description

The Commercial Controls Motorized Tape Reader, Model 2 is designed for general applications involving the reading of information from a punched paper tape. It is a completly self-contained machine requiring only cable connections to the apparatus with which it is to be associated.

The Tape Reader has been designed for a wide variety of tape applications. It is capable of reading any number up to eight transversely-spaced code holes. A simple adjustment permits the use of any width tape from eleven-sixteenths to one-inch wide.

The reader unit is of the intermittently operating pin-sensing type where the operation is under control of a cam shaft which makes a single-revolution to read each code. Operation of the cam shaft is controlled by an electro-magnetically controlled, single-revolution clutch for connecting the cam shaft to a constantly running drive pulley. This clutch may be continuously energized to cause the reader to operate continuously at the set speed, or it may be impulsed for each cycle.

In operation, the reading pins are allowed by a cam to move under light spring tension into engagement with the tape while the tape is stationary. If there is a hole in register with a pin, the pin moves through the tape to a position allowing an associated contact assembly to operate, but if there is no hole at this point, movement of the pin is blocked by the tape and accordingly, the operation of the associated contact assembly is prevented. Movement of the contact assemblies is transversely of the direction of movement of the reading pins so that a contact load sufficiently heavy for reliable operation can be controlled by relatively light tension on the reader pins. The tape is advanced one step during each cycle by a pin wheel which is indexed automatically just after the reading pins have been withdrawn from the tape.

Specifications

Tapes Used - .687" to 1.000" Wide.

Hole Size - .046" diameter feed hole. .072" diameter code hole.

Hole Spacing - The reader is made for tape with the feed holes .394" from the inner or guiding edge of the tape, and can be adjusted for using tape with the feed holes .4375" from the guiding edge.

Feed Hole Location - .100" both longitudinally and transversely. The tape reader can be used with tape having the feed holes in line with the code holes transversely of the tape, or the reader can be adjusted to be used with tape having the feed holes .013" in advance of the code holes.

Operating Speed - The standard driving speed for the reader is 1200 r.p.m. providing a tape reading speed of 20 codes per

second. Special drives are available for obtaining other tape reading speeds.

Clutch - A magnetically-operated, single-revolution clutch is used to drive the cam shaft of the reader. A special half-revolution clutch can be provided which permits the reader to be controlled electrically to stop with the code contacts in operated position until an impulse is supplied to the clutch magnet causing the reader to resume operation. This can be arranged so that when the reader is turned off, it will always operate to its full cycle position, permitting tape to be easily inserted or removed. The control impulse for the clutch magnet should have a minimum duration of 15 milliseconds and should not exceed the cycle time of the driven cam shaft to avoid repeat operation. Clutch magnets are available either with a total coil resistance of 450 or 1000 ohms. A minimum of .090 amps is required for operation of the clutch magnet.

Tape Reader Contact - The contacts for each individual code are provided with dual contact points for maximum reliability. Any contact arrangement involving up to six contact springs may be provided for each code position. The code contacts operate at about 60 degrees and remain operated until about 215 degrees in the 360 degree cycle of reader operation. Usually, a cam-operated contact is provided in series with the reader code contacts which closes at 65 degrees and opens at 210 degrees.

Tape Check Mechanism - The reader is provided with mechanism for operating contacts whenever the tape is excessively tight, or whenever the supply of tape is exhausted, or when the tape hold-down arm is not in position to hold the tape in feeding position against the pin wheel.

Motor Drive - The reader is equipped with a one-thirtieth horsepower induction motor. A V-Belt is used to connect the motor to a clutch shaft. The shaft is mounted in precision sealed ball bearings.

Auxiliary Contacts - A maximum of ten cam-operated contacts may be provided on the clutch shaft to operate in variable timed relation with the reader cycle. Each contact may be operated to close for various different portions of the cycle. One of these contacts is usually employed to open the clutch circuit during the cycle of the reader.

Reader Mounting - The reader is removably mounted as a unit on the clutch casting which is in turn mounted on a sheet metal base. The drive from the clutch shaft is through a separable coupling to the cam shaft of the reader.

Control Switches - A switch and indicating light bracket is provided in the front of the cover which can contain two toggle switches and one indicating light. One switch is normally used to control the power to the motor and the other to control the clutch. The indicating light is usually provided to show when the reader is in operation.

External Connections - A power cord and

a separate control cable are attached to the Motorized Tape Reader. The control cable can terminate in any size connector but this cable is normally terminated in a Cannon NK-27-22C (27 contacts) connector.

Tape Unwind - An optional tape unwind reel can be mounted on the main base. This reel is six inches in diameter and holds tape for unwinding from the center of a roll.

Tape Rewind - An optional rewind reel for the tape after it is read can be provided. This is a six-inch diameter reel driven by a spring belt from the clutch shaft. This can be omitted when not required.

Auxiliary Equipment - Protecting fuses and terminal blocks are provided within the machine. When required up to five telephone type relays can also be mounted within the machine. Also when required, a full-wave rectifier can be mounted within the machine for providing about 70-watt D.C. supply at approximately 90 volts.

Half-Speed Cam Contacts - A special cam operated contact arrangement can be provided on the reader unit. This includes a contact-operating cam which is gear driven from the reader shaft to rotate at one half the reader shaft speed. Any contact arrangement can be provided involving up to six contact springs. A 180 degree cam is used, and this arrangement is useful either to provide alternate control of two different circuits by successive codes or to enable the reading of two successive codes in response to each clutch impulse.

Size - Width - 12-1/2", Height - 6-1/2", Depth - 12-1/2" (19-1/2" with rewind reel - 25" with unwind reel).

Weight - 26 Lbs.

Finish - Blue-gray fine wrinkle.

Sequence of Operations

When the reader clutch magnet is energized, the clutch connects the constantly running drive pulley with the reader cam shaft.

The mechanical operation of the clutch is as follows: (See Figure 3)

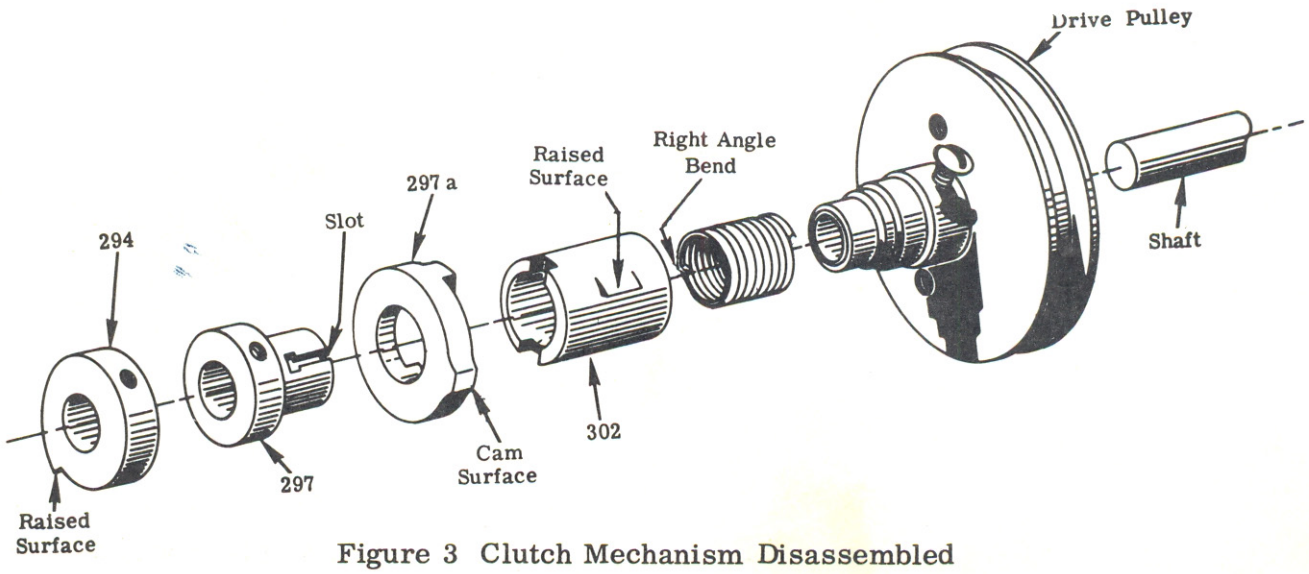

Figure 3 Clutch Mechanism Disassembled

The clutch spring (301) is close wound and made from rectangular wire. The dimension of the inside diameter when the spring is not expanded is held very accurately. This insures a secure grip on both the drive hub and the clutch collar (297) on which the end of this spring assemble.

The end of the spring (301) which the clutch collar assembles has a right angle bend. This bend fits into a slot in the collar.

The opposite end of the clutch spring strikes against a protruding point on the inside of sleeve 302.

The spring, when assembled, will ride over the clutch collar as far as the end of the slot. The other end will ride the drive hub. The sleeve itself will assemble over the spring and the two ends will fit the surface provided for it on both the drive hub and the clutch collar.

When the clutch magnet is not energized and its armature is resting against the raised edge of the clutch sleeve (302), the spring (301) is expanded enough so that it does not grip the drive hub. Therefore, the drive pulley is allowed to rotate freely without turning the cam shaft.

If the armature is operated (due to the clutch magnet being energized) the tension of the spring (301), due to it being slightly forced in an unwound position, will be exerted against the sleeve (302) by the end of the spring in the slot. This will cause the sleeve to start to rotate, allowing the spring to grip the drive hub. The drive pulley's motion will rotate the spring and also tend to wind the spring tighter.

The rotation of the spring will be transferred to the collar (297), the detent (294), and finally the cam shaft.

The spring rotation also causes the rotation of sleeve 302, due to the end of the spring riding against the protruding point on the sleeve's surface.

When the clutch armature is released, it will engage the raised edge on the sleeve (302) (near the end of the punch cycle), and the rotation of the sleeve will be stopped.

The rotation of the spring will exert a pressure against the edge of the slot which will tend to unwind the spring. This will increase the I.D. such that the spring no longer grips the drive hub, thus allowing the drive pulley to run free again.

The speed of rotation will cause the detent (294) to overthrow and lock in position so that the spring is held with this enlarged I.D. until the armature is again released.

Also, a knockoff cam and overtravel stop (297a) is used for greater efficiency of operation at high speeds. This cam is set screwed to the collar 297 in such a manner as to limit the overtravel of the clutch. This stopping action is necessary to prevent unnecessary movement after the clutch is detented.

The cam surface is used to operate an armature knockoff bail for positive release of the clutch armature away from the cores of the clutch magnet. (See Figure 4)

When the reader shaft rotates, the interposer bail arm (432) rocks about the pivot shaft (caused by cam 434 mounted on the

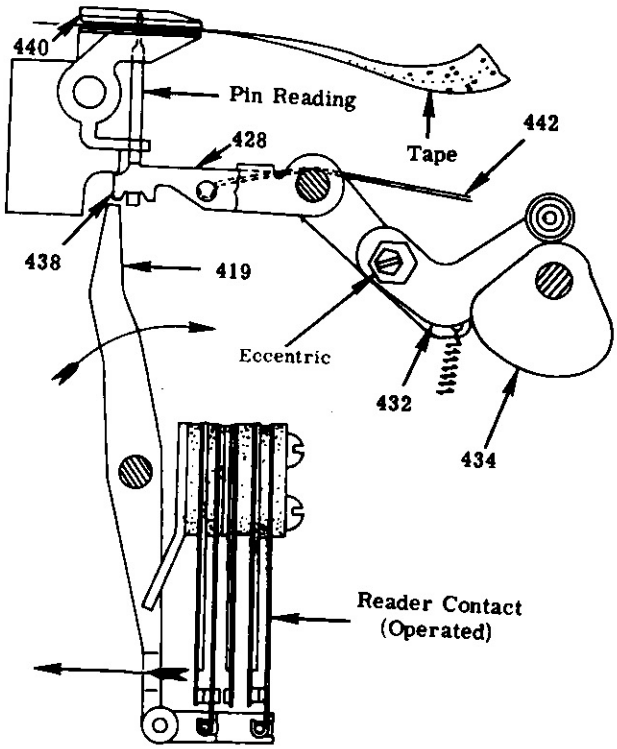

Figure 4 Feeler Pin Reading Code

reader shaft), and raises the interposer bail (431). This action will cause the interposers (428) to rise due to the spring tension of their respective springs (442), thus allowing the feeler pins to rise in the guide block (440) and enter any tape perforations that are in alignment with their respective pins. (See Figure 4) When one or more pins enter a perforation in the tape, the associated interposer (428) rises sufficiently to free the interposer shoulder (438) from blocking engagement in the path of its associated contact lever (419). Therefore, when the interposer studs (427) move from between the contact lever bail rollers (426), the contact lever or levers, now freed of the interposer shoulders, will move inwardly under tension of spring contact straps (416) and close or open contacts as the case may be. (See Figure 5).

If there is no perforation in alignmen with a feeler pin, the pin will come up to the tape and make light contact with it, due to the tension of spring (442), which is insufficient to force the pin through the tape. Thus, the interposers will not release the contact arms and the contacts will not be allowed to operate. (See Figure 6)

At approximately 210° rotation of the reader shaft, the pins will be pulled down below the tape level. This is accomplished by the lowering of the interposer bail (431). The studs (427) on the interposer bail separates the contact lever bails (423), restoring the contacts to the non-operated position.

The common contact RCC, under control of the arm (425A) is permitted to operate during each reading cycle. The extension (425A) is a downward extension of the bail

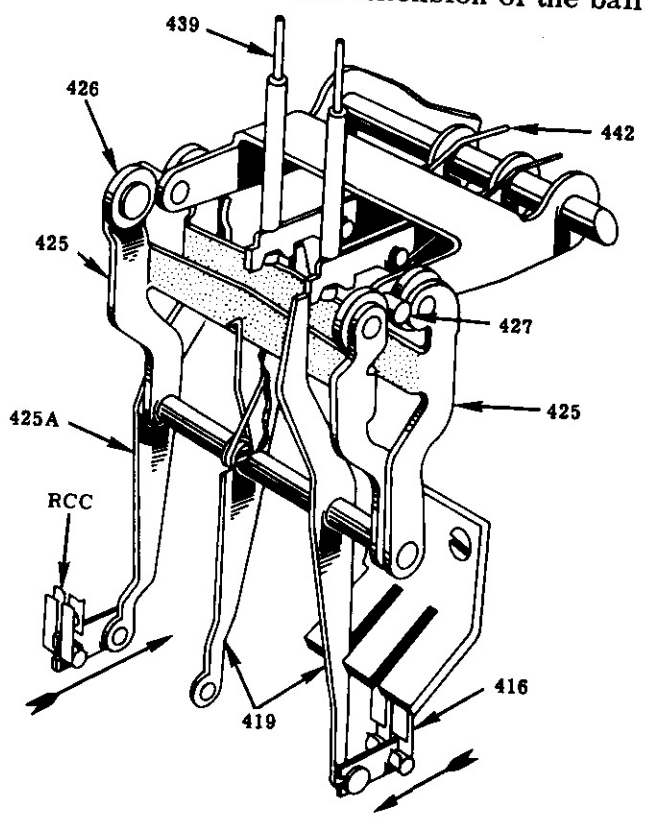

Figure 5 Feeler Pin & Contact Operation

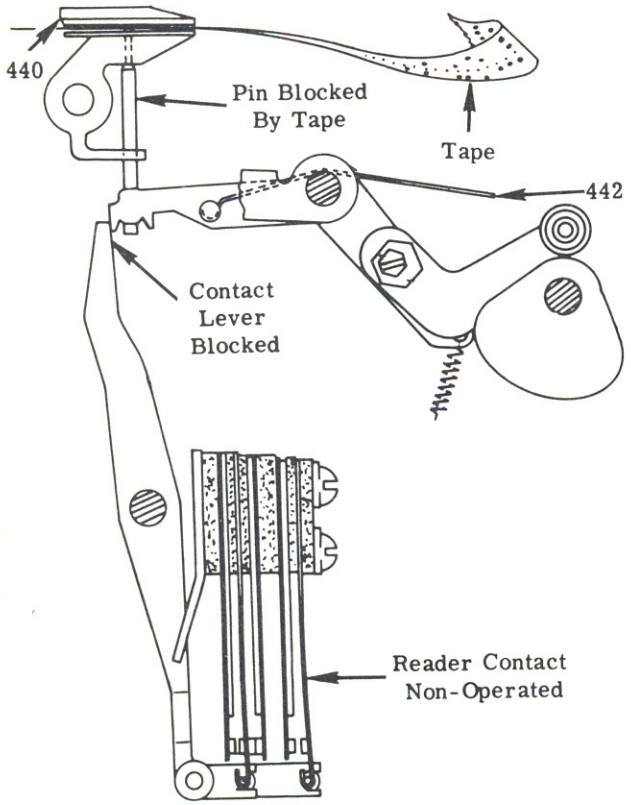

Figure 6 Feeler Pin Stopped By Tape

arm (425).

The feeding of the tape takes place after the pins have moved down below the tape level. During each cycle of the reader the tape must be advanced 1/10" (one code position). The codes are read at the beginning of the reader cycle and the tape is fed at the latter part of the cycle. The feeding of the tape is under control of the tape feed cam (463). As the cam roller follows the contour of the tape feed cam, the feed pawl operating arm (460) moves the feed pawl into engagement with a tooth on the ratchet wheel (457). An adjustable feed pawl stop (467) is used to limit the amount of movement of the feed pawl. (See Figure 7)

The pin wheel (455) is attached to the feed shaft (456) as is the feed ratchet wheel (457). As the feed ratchet wheel is rotated by the feed pawl action, the pin wheel is rotated an amount sufficient to advance the tape one code position. The pin wheel has small pins which project in a sprocket-like fashion into the feed holes of the tape. As the pin wheel revolves, the feed pins advance the tape according to the amount of rotation of the feed ratchet and pin wheel. The tape must be advanced to position the holes in the tape in a central position in relation to the reading pins.

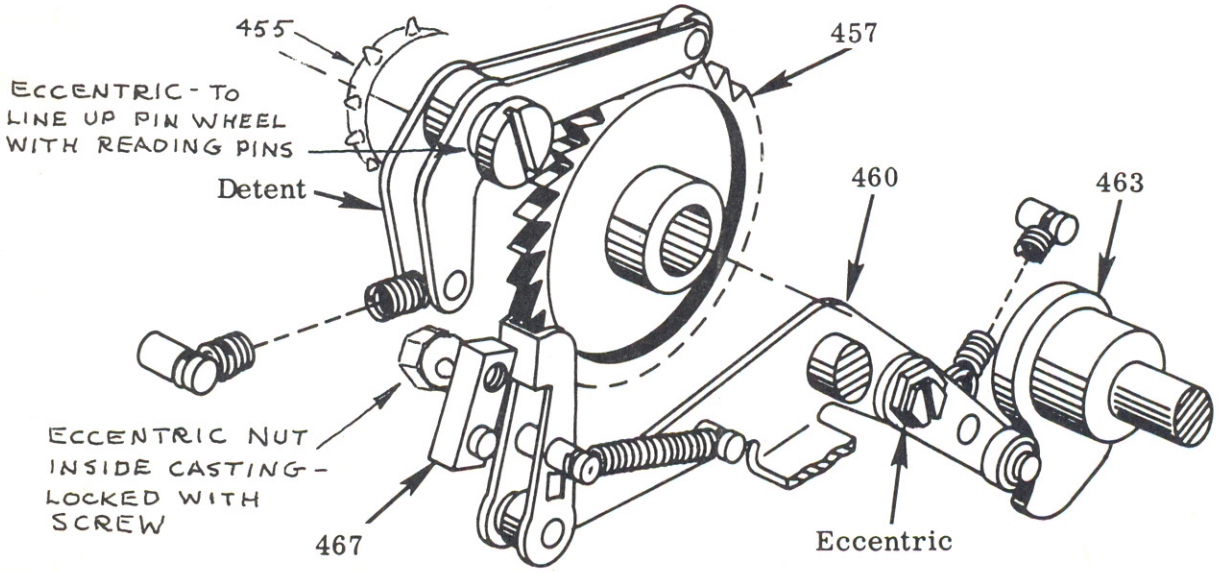

Figure 7 Tape Feed Mechanism

A tape hold down lever (479) is used to hold the tape against the pin wheel and to guide the tape as it is being advanced. When the tape hold down lever is in its opened position, the reader tape contact (RTC) is opened preventing the reader from operating. (See Figure 8).

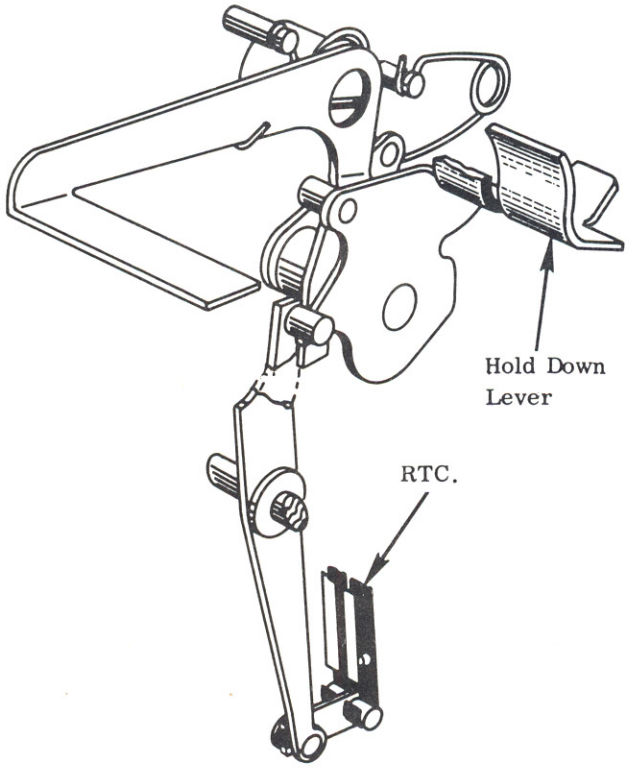

Figure 8 Tape Hold Down Lever & RTC

A tape tension arm is used to operate a micro switch if the tape binds. The operation of these contacts will break the circuit to the clutch magnet, stopping reader operation. (See Figure 9).

Removal and Assembly of the Tape Reader

Removal of Reader Unit (See Figure 10)

1. Remove the reader cover.
2. Loosen two mounting screws and remove the reader.
3. If it is necessary to detach the reader from the base, unplug the cable leads from the plugboard.

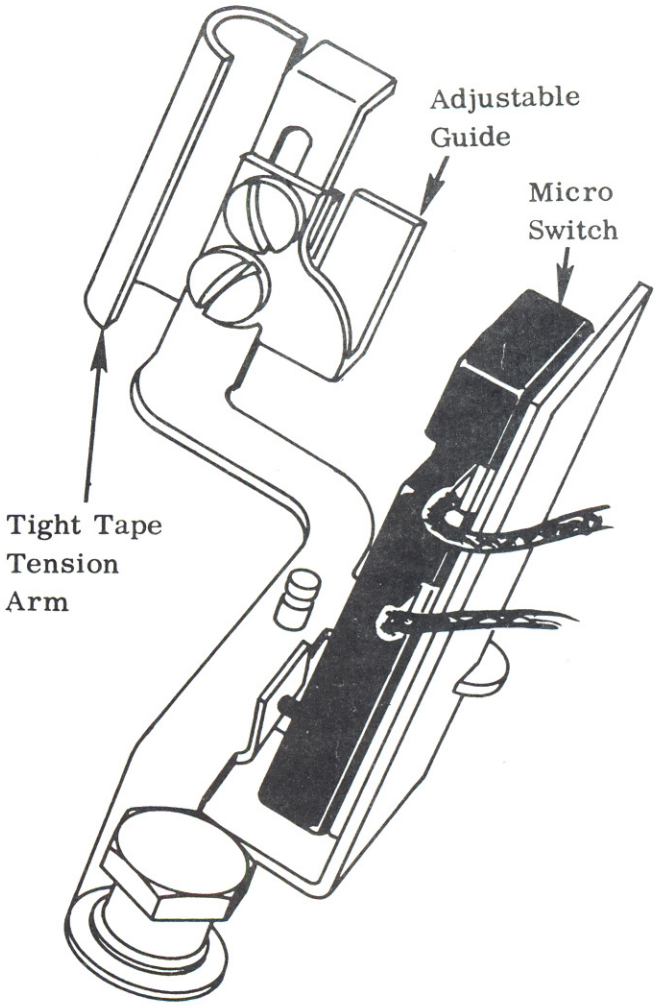

Figure 9 Tape Tension Arm & Contact

Removal of Contact Lever and Bracket Assembly (See Figures 10 and 11)

1. Remove the reader from the casting.
2. Remove two mounting screws and lift the contact lever and bracket assembly out of position. If it is necessary to detach the contact lever and bracket assembly from the reader, unplug the cable wires from the plugboard and remove two wires from the tape tension switch.

NOTE: When replacing the assembly, make certain that the tape hold down lever is against the pin wheel before the bracket

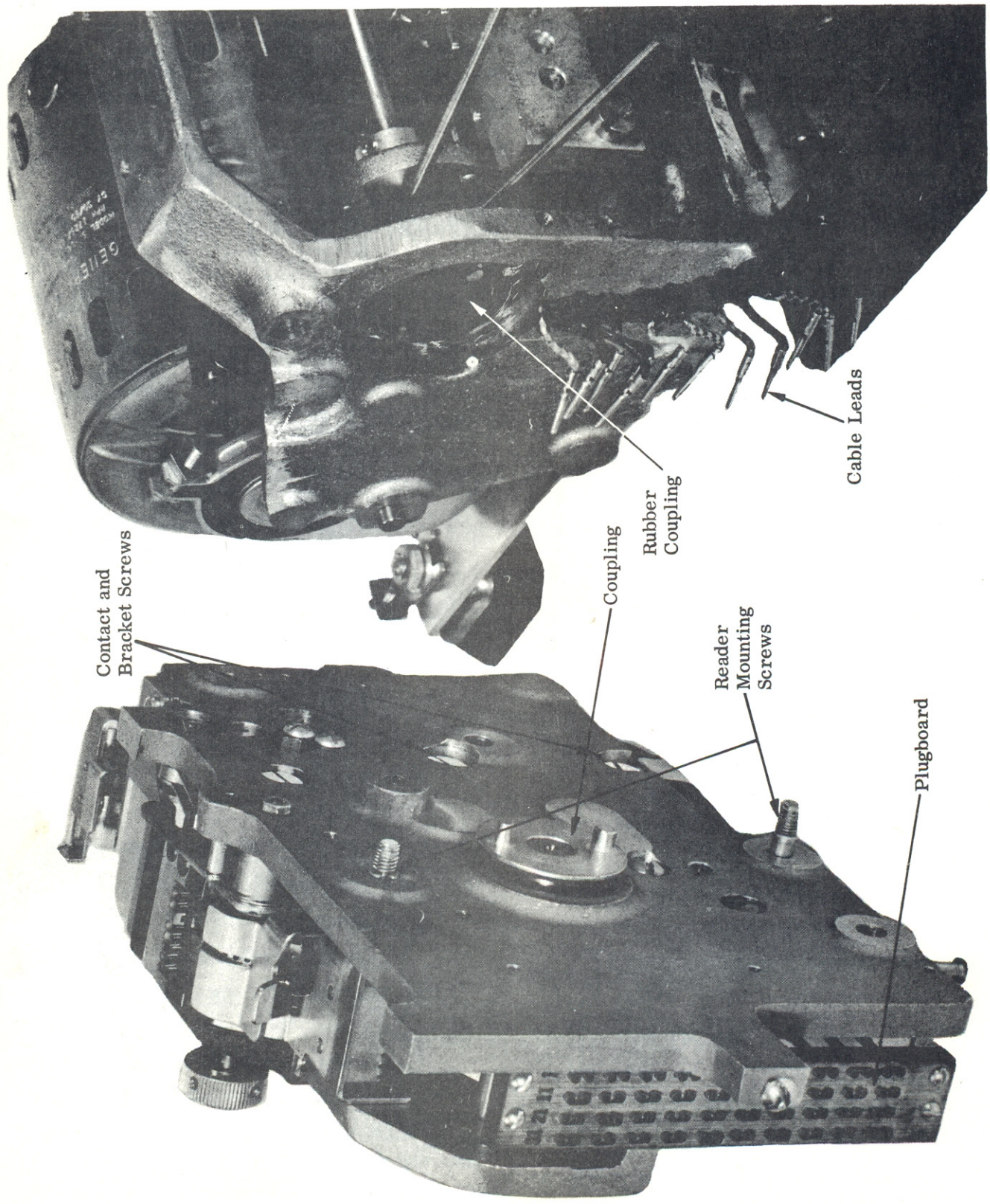

Figure 10 Reader Removed From Frame

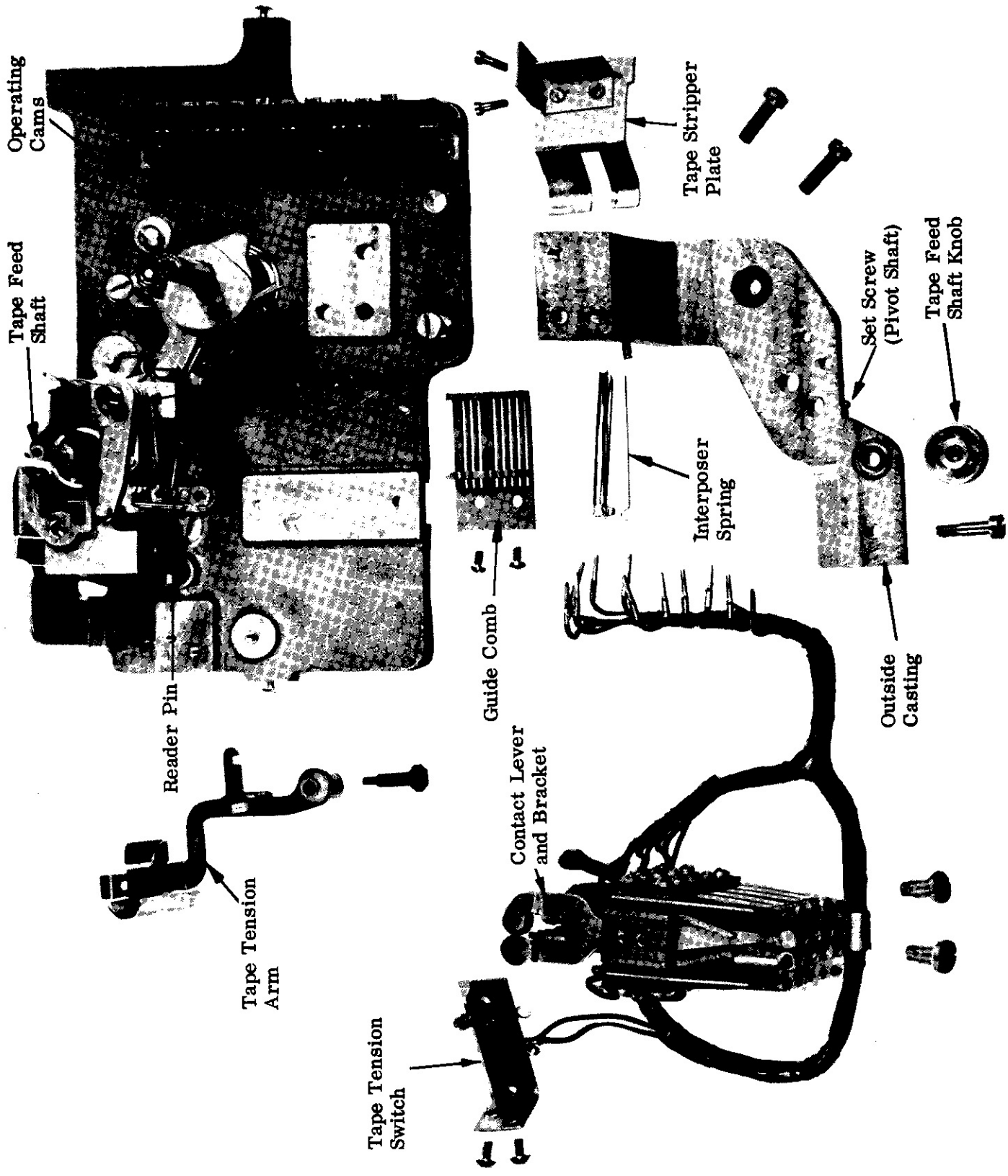

Figure 11 Reader Disassembled

assembly is located in position. Otherwise, the reader tape contact lever may be positioned on the wrong side of the tape hold down lever stud.

Removal of the Operating Cams

1. Remove the reader from the casting.
2. Loosen the cam cluster set screws and pull the shaft out of the castings. The cam cluster will fall free.

Removal of a Reader Pin (See Figure 11)

1. Remove the contact lever and bracket assembly.
2. Remove the reader pin interposer guide comb.
3. Move the reader pin end of the interposer (437) clear of the reader pin and pull the pin out of the guide block. The end positions must be removed first to allow room for removing the adjacent positions.

Removal of Tape Feed Shaft (See Figure 11)

1. Remove two screws and remove the tape stripper plate. The interposer spring bracket is mounted to the stripper plate, therefore, be sure the interposer springs do not drop when removing the stripper plate.
2. Loosen two set screws and remove the tape feed shaft knob.
3. Loosen the set screw holding the interposer pivot shaft on the outside casting.
4. Remove three mounting screws and carefully remove the outside casting.
5. Take the tension off the detent arm (by unhooking the detent spring) and slide the tape feed shaft out of the inside casting.

ADJUSTMENTS OF THE TAPE READER

Speed Adjustments - The standard driving speed for the reader is 1200 r.p.m. providing a tape reading speed of 20 codes per second. Special drives are available for obtaining other tape reading speeds.

Tape Registration Adjustments

1. The tape support plate should support the inside edge of a properly perforated tape so that the code holes in the tape are concentric with the reader pins. The tape support plate is adjustable to obtain this result and care should be taken to be sure the support is square with the guide block before the screws are tightened. In a properly perforated tape, the center line of the feed holes is .394" plus or minus .005" from the inside edge of the tape. Adjust the inside and outside tape guides located on the rear contact arm to obtain the same results as mentioned above. Adjust the tape stripper so that it locates even or below the surface of the pinwheel. (So that the hold down arm rests on the pinwheel and allows tape clearance between the stripper and the hold down arm.) (See Figure 12)
2. Rotate the cam shaft until the interposer bail roller is on the high point of the interposer bail cam. Adjust the eccentric on the bail so that the reader pins are .005" to .010" below the top of the guide block. (See Figure 13)
3. The spacing of holes in a properly punched tape is .100" or 60 holes in 6.000" plus or minus .010", therefore, it is necessary to have the code holes of a perforated tape concentric with the reader pins. To obtain this registration, adjust the detent

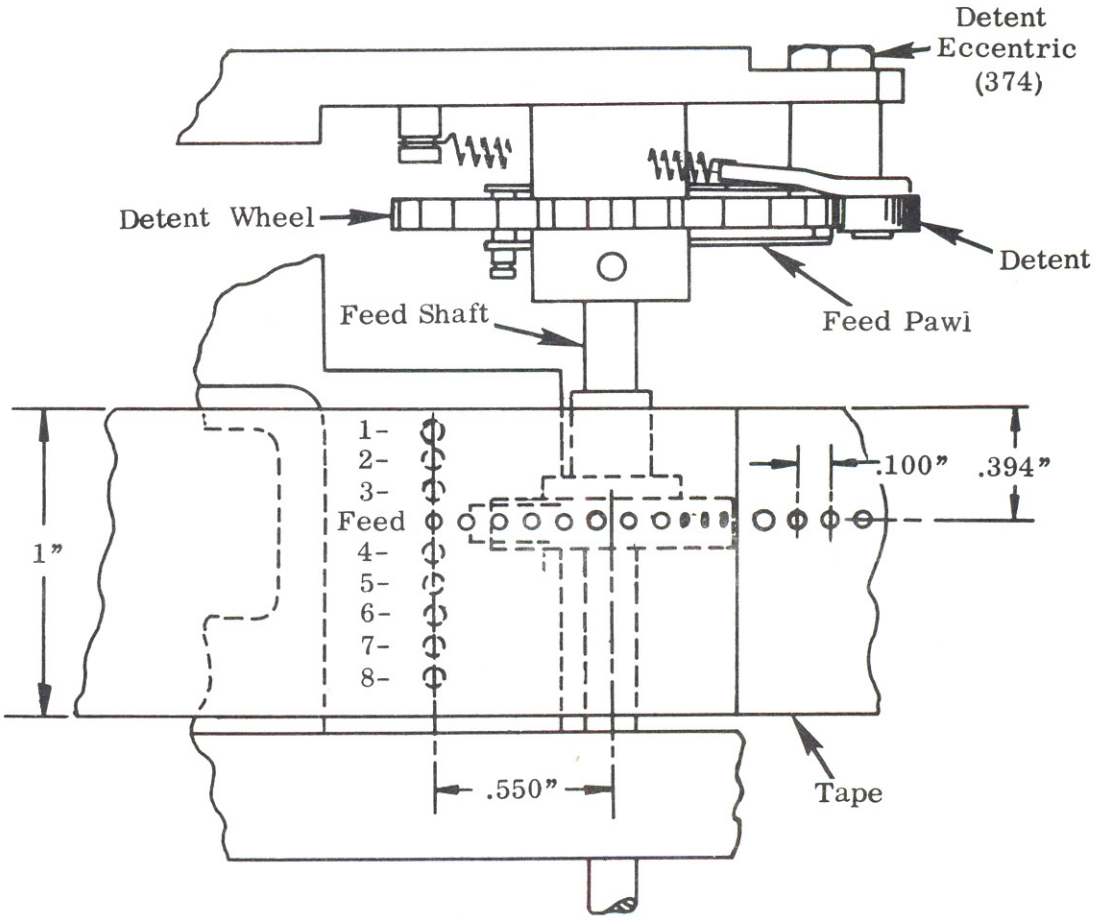

Figure 12 Tape Registration

eccentric. (See Figure 13)

4. Adjust the eccentric on the feed lever to move the ratchet wheel to within less than .010" of detented position. The extent of feed motion should never be beyond detented position. (See Figure 13)

5. Rotate the cam shaft until the feed lever roller is on the high point of the feed cam. Adjust the feed pawl stop to stop the motion of the feed pawl, without choking off, just as soon as the detent roller is fully seated between two teeth of the ratchet wheel. (See Figure 13)

Clutch Mechanism

1. Set the clutch detent cam on the reader shaft to engage the detent arm at approximately 60 degrees before both banks of reader contacts make. To check the zero

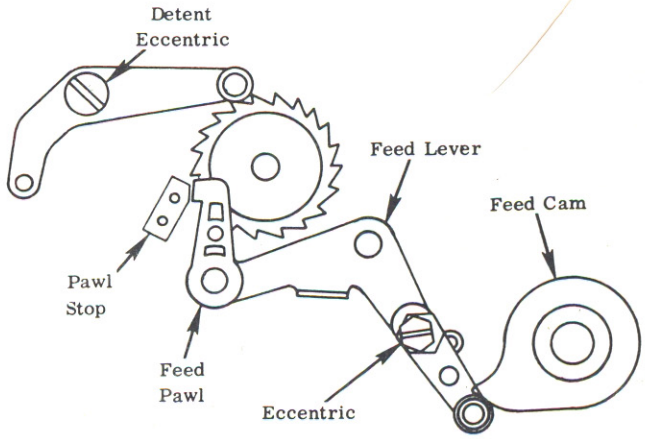

Figure 13 Tape Feed Adjustments

setting of the clutch, place the timing dial T18088 on the end of the reader shaft as shown in Figure 14. Connect the leads of the ohmmeter to a "make" contact (contacts should be properly adjusted). Turn the reader shaft until the contacts make (full deflection of meter needle) and set the timing dial at 60 degrees. Turn the shaft to zero degrees and set the clutch.

2. Position the clutch magnet yoke on the casting so that the tip of the armature when in attracted position clears the high point of the clutch sleeve by .005" to .007". When the armature knock-off roller is on the ~~high~~ low dwell of the cam, there should be .005" to .010" gap between the armature and the knock-off. (See Figure 15)

3. Position the ~~clutch collar~~ detent (294) on the clutch shaft so that when the latch point of the sleeve just engages the armature tip, the latch point of the detent cam is 1/32" short of latching on tip of detent arm. In making this adjustment, the clutch sleeve and its collar should have their normal free relationship with each other. (See Figure 16)

4. Adjust the knockoff cam so that the clutch will not overtravel more than 4-1/2 degrees plus or minus one degree from the latch point, or, 1/64" to 1/32" overthrow as measured between the detent cam and detent arm.

Contact Adjustment

Check the contact assemblies to see that all springs are assembled in proper sidewise registration in each stack. The movable contact springs should all have sufficient tension to follow their contact levers to their extreme inward position without lost motion in their nylon operators.

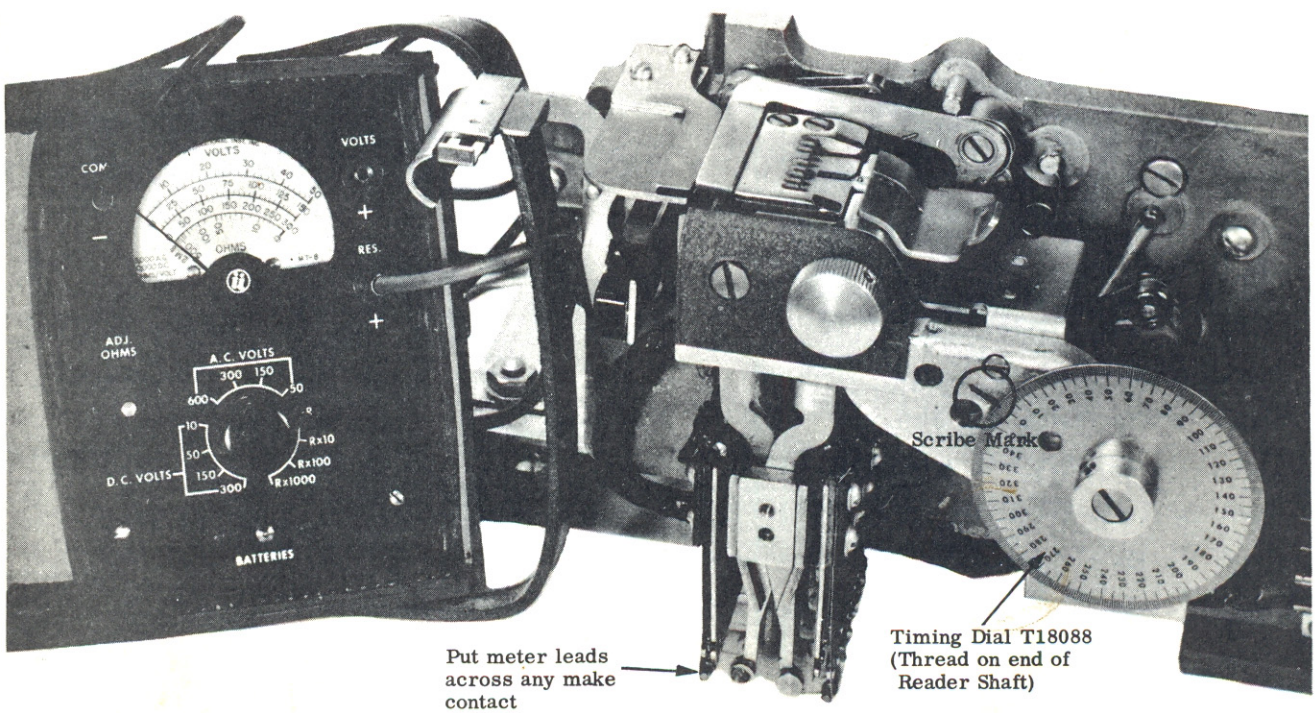

Figure 14 Zero Setting Of Clutch

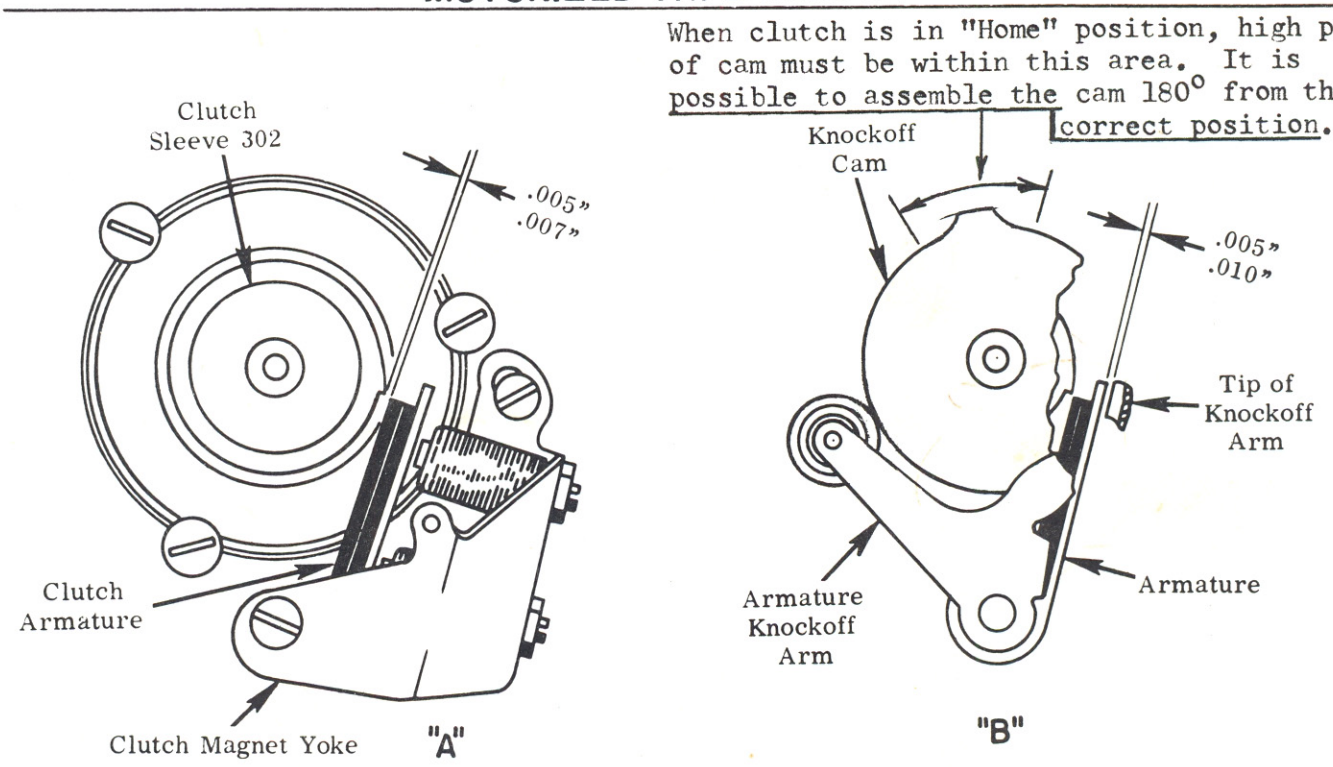

Figure 15 Clutch Magnet Yoke Adjustment

1. Place a piece of tape without holes in the reader to block all pins and turn the cam shaft until the interposer bail roller engages the low dwell of the cam. Adjust all normally open contact points to a gap of .020" to .025".

2. Remove the tape from the reader and adjust all normally closed contact points to see that they are all closed with at least an appreciable movement of the stationary contact springs away from their stop strips.

3. Replace the tape in the reader and with the interposer bail roller against the low dwell of the cam, check the normally closed contact points to see that they are all closed with at least an appreciable movement of the stationary contact springs away from their stop strips.

4. Withdraw the tape hold down arm from the pin wheel and adjust the tape contact points to a gap of .020" to .025". Move the tape hold down arm against the pin wheel and check to see that the tape contact points close with at least an appreciable movement of the stationary contact springs away from their stop strip.

Care should be taken to see that the two

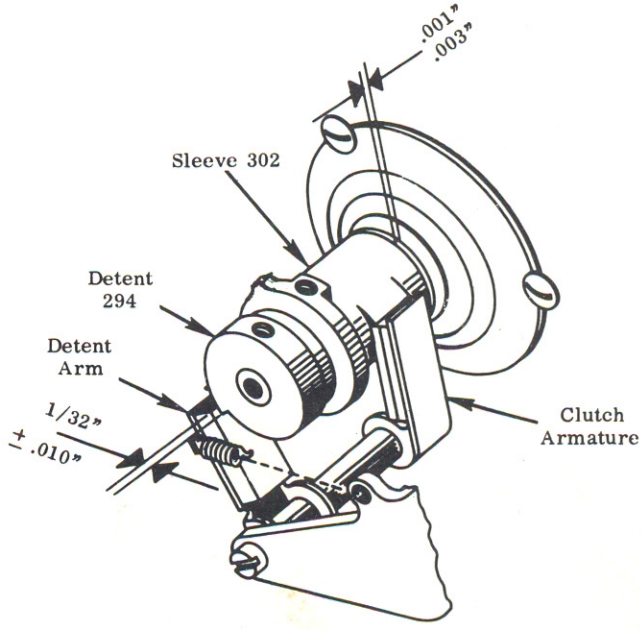

Figure 16 Clutch Adjustment
View shows clutch in "Home" position, provided Detent 294 is latched on Arm.

contact points on each spring engage their mating contact points as near simultaneously as possible. It is also important that there should be no noticeable difference in the point at which contacts in various stacks make or break during rotation of the cam shaft.

Clutch Shaft

To remove the shaft (315a), proceed as follows:

1. Remove the tape reader cover and move the tape reader from the casting.

2. Loosen the clutch shaft collar (315b) screws. Also, loosen the clutch shaft pulley (315c) set screw, and the cam (for contacts) set screws. Remove the drive belt (315d) from the clutch pulley. (See Figue 17) NOTE: To remove tension on the drive belt, loosen the motor mounting screws and slide the motor toward the clutch shaft.

3. Remove two screws and remove the clutch magnet assembly.

4. Loosen the clutch detent set screws and pull the clutch shaft out of the casting from the reader end.

To assemble and adjust the clutch shaft, proceed as follows:

1. Assemble the clutch shaft (315a) in the casting being sure to place on the shaft the collars (315b), spacer (315e) and the cams. Also, check to see that the drive belt (315d) is in place.

2. Mount the tape reader to the casting. Slide the shaft so that the rubber coupling engages the pins on the punch coupling. Place a .010" shim stock or gage between the couplings and tighten the collar set screw.

3. Push the clutch pulley in against the bearing until the bearing rests against the three stop screws. Place the collar (315b) against the pulley bearing and tighten the

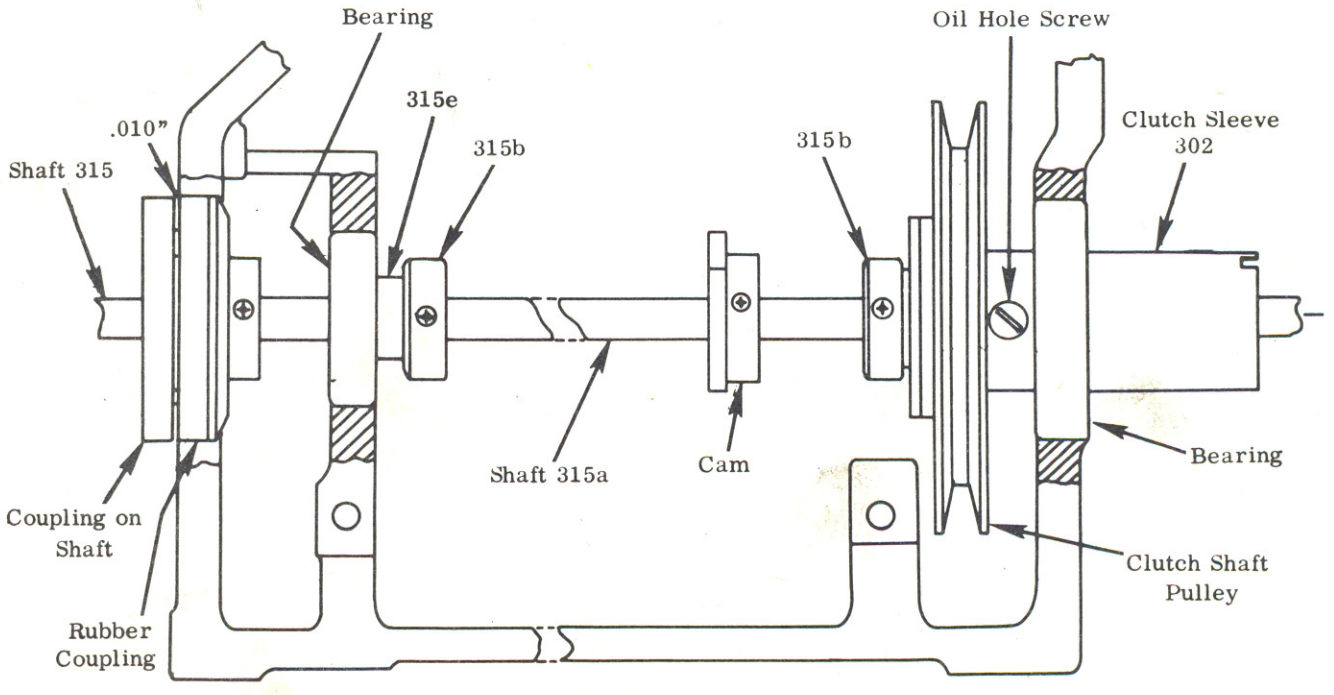

Figure 17 Clutch Shaft

collar set screw being sure to maintain .001" to .003" end play in the shaft.

4. Reset the tension of drive belt by moving the motor and tightening the motor mounting screws.

5. See assembly and adjustment procedure of reader clutch mechanism on page .

Clutch Pulley

If it is necessary to remove the pulley (315c), proceed as follows:

1. Remove the clutch shaft.

2. Remove two screws and remove the clutch magnet assembly.

3. Remove three bearing screws and remove the bearing.

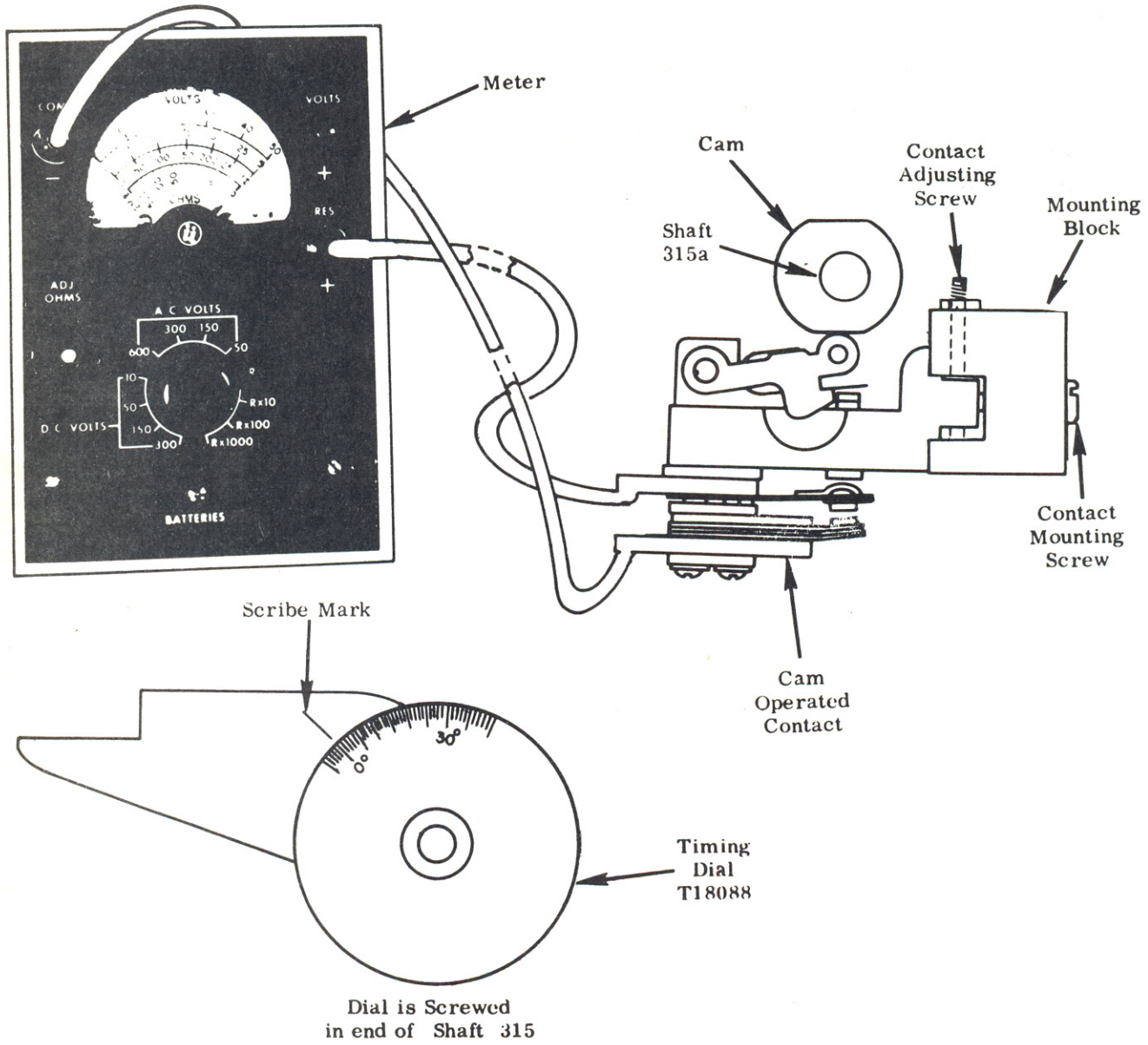

Figure 19 Cam Contact Adjustment

4. Remove the clutch pulley.

To assemble and adjust after replacing the clutch pulley, refer to assembly and adjustment of Clutch Shaft.

Tape Rewind

(Optional Equipment) (Figure 18)

The tape rewind assembly is optional equipment and is convenient where long lengths of tape are required.

The rewind assembly is mounted to the motorized reader and adjusted at the factory. However, for convenience and protection during shipping, the rewind is disassembled and packaged separately.

Three mounting screws are provided on the base of the machine, each having an extra nut for rewind mounting. The spring belt (315f) is placed over the clutch shaft (a

groove is provided on the shaft in later model machines) and the rewind pulley.

The tape is attached to spring clips on the inside flange, which is rotated by pressure of a spider spring (315g) against the face of the flange. The tension of the spider spring (315g) is adjusted by loosening the set screw and moving the collar (315h) in or out.

Auxiliary Contacts and Cams

There are two cam operated contacts provided as standard equipment which are controlled by cams located on the clutch shaft. One is used for clutch magnet control and the other is a circuit control to the reader contacts. A maximum of eight more contacts may be added. Each contact may be operated to close for various different portions of the cycle. The contacts may be either the normally open (A) or the transfer (C) type.

The cams are adjustable to any radial position on the clutch shaft.

Also, the cams are available with variations in the high and low dwells (controlling degrees at which contact will open and close). The high dwell on all cams is 32 degrees less than the number of degrees the contacts are closed. For example, if a cam has a 50 degree contact closed surface, the high dwell will be only 18 degrees.

Removal, Assembly and Adjustment - If it is necessary to remove and replace a cam, it will be necessary to remove the clutch shaft (315a). Refer to removal of clutch shaft on page

When assembling cams on the shaft, the collar of the cam should be facing toward the clutch end of the shaft.

Adjusting the Contact to the Cam - If it is necessary to attach timing dial T18088 to the end of the punch shaft (315) and adjust the dial to zero with the clutch shaft in the home position, (clutch latched).

For an example adjustment of a contact to a cam, assume that the contact make time is 130 degrees duration and its break time is 230 degrees duration.

It is necessary to adjust the contact vertically in its mounting block to obtain the 130 degrees make duration of the contact. This is accomplished by connecting the leads of an ohmmeter across the contact points. Turn the clutch shaft and check the amount of time the contacts remain closed (full deflection of the meter needle). It should be 130 degrees.

If the contact remains closed less than 130 degrees, move the contact up. (Loosen the contact mounting screw and turn counter clockwise on the adjusting screw.) Tighten lock nut and mounting screw and recheck make duration.

If the contact remains closed more than 130 degrees, move the contact down. (Loosen the contact mounting scew.) Tighten lock nut and mounting screw and recheck make duration (See Figure 19)

Adjusting the Cam Position On Shaft

For an example setting, assume that the contact is to make at 250 degrees and break at 20 degrees rotation of the clutch shaft.

To set the cam on the shaft correctly, proceed as follows:

1. Connect the meter leads across the

contact.

2. Turn the clutch shaft to the home position (clutch latched) and be sure the timing dial is set at zero.

3. Release the clutch and rotate the shaft until the dial reads 20 degrees. Loosen the cam set screw and rotate the cam in the same direction of shaft rotation until the contact breaks (roller will be 16 degrees beyond high dwell of cam). Tighten the cam set screw and rotate the shaft to 250 degrees to see that the contact makes.

MOTORIZED TAPE READER

LUBRICATION

The lubricating points for the various components of the tape reader are shown in figures 21 through 28.

The following points should be lubricated with CCC lubricant number 6:

All cam surfaces, feed pawl, ratchet wheel, detent, surface of contact operating bails, spring ends and latching surfaces.

The cam roller bearings should be lubricated with CCC lubricant number 1, then followed with CCC lubricant number 10.

All other moving parts, pivots, bearings or combs not otherwise shown should be lubricated with CCC lubricant number 1.

Note: On Bell & Howell equipment having aluminum cams, the cam surface should be greased lightly with the CCC 20 lubricant.

The plastic or nylon cams (blue or white), when used, need no lubrication on this surface.

CCC LUBRICANT NUMBER	GENERAL DESCRIPTION	APPROVED SOURCE	LUBRICANT'S NAME
8	Oil - for pivot pins & bearings	A.T.Supply Co.	Molub Alloy SM Oil #0
1	A light oil which has good lubricating and rust preventative properties.	Shell Oil Co.	Shell Tellus Number 27
2	For all porous metal bearings	Socony Vacuum	Gargoyle DTE 797
6 or 10	A grease of light consistency which contains oxidation resistant additives and provides good lubrication without excessive channeling.	Shell Oil Co.	Alvania #2
20	Silicone grease.	General Elec.	Versilube G-300

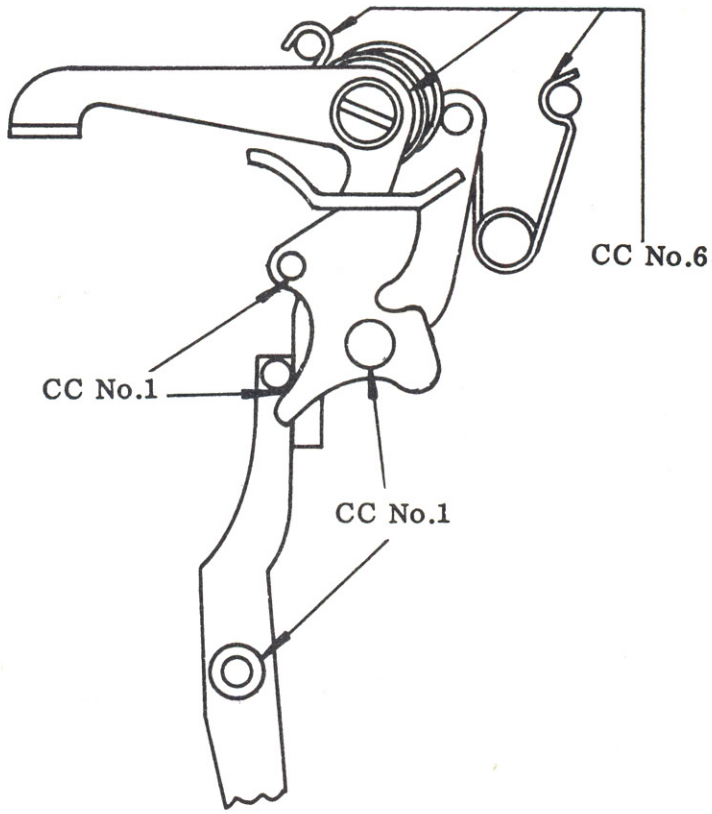

Figure 21 Tape Hold Down Linkage

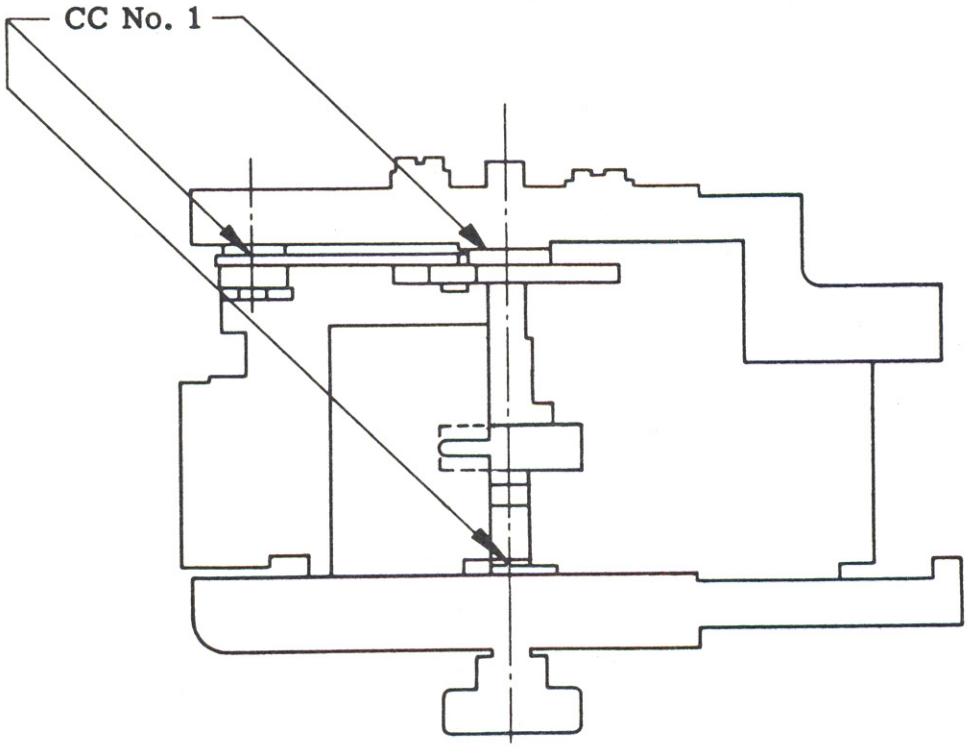

Figure 22 Tape Feed Shaft

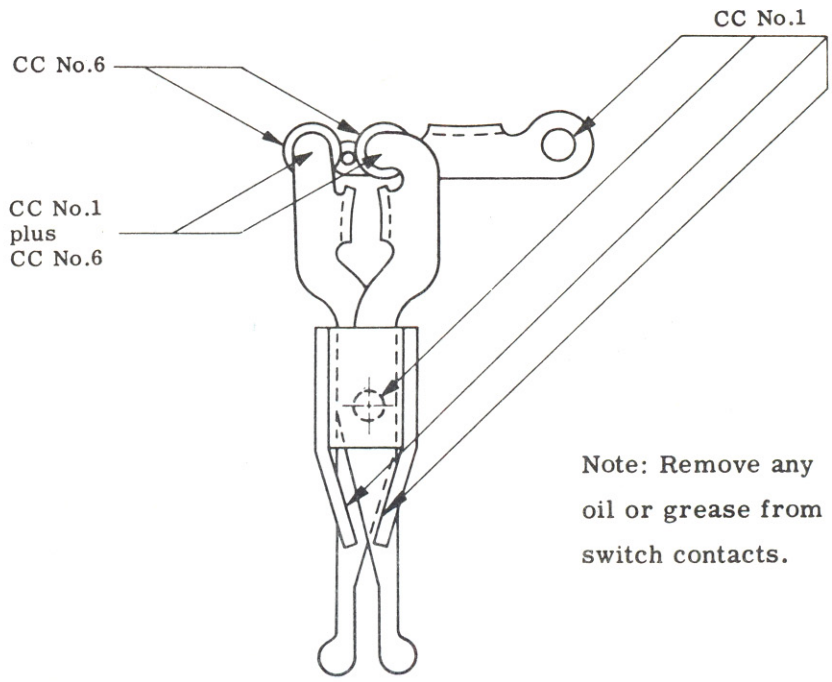

Figure 23 Contact Operating Bails

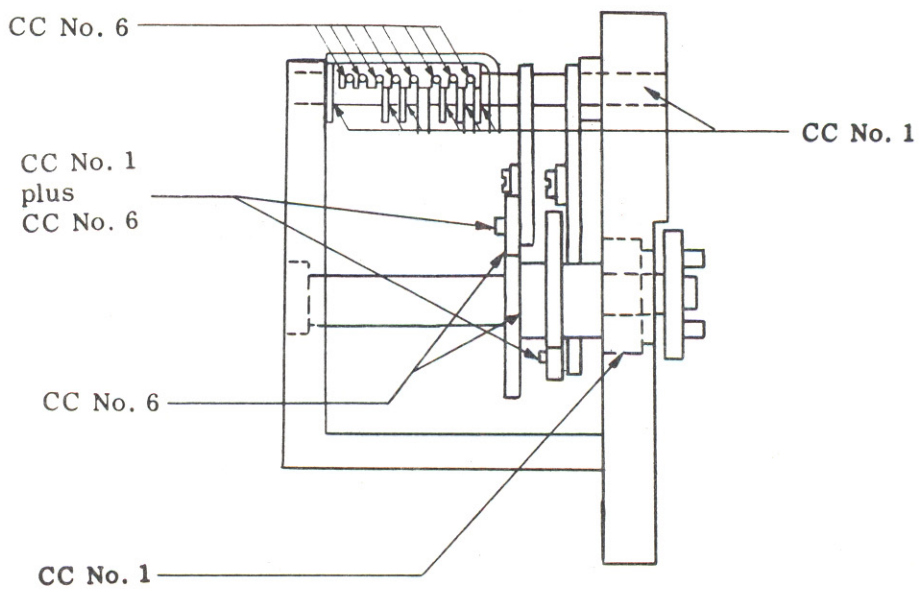

Figure 24 Cam Shaft & Springs

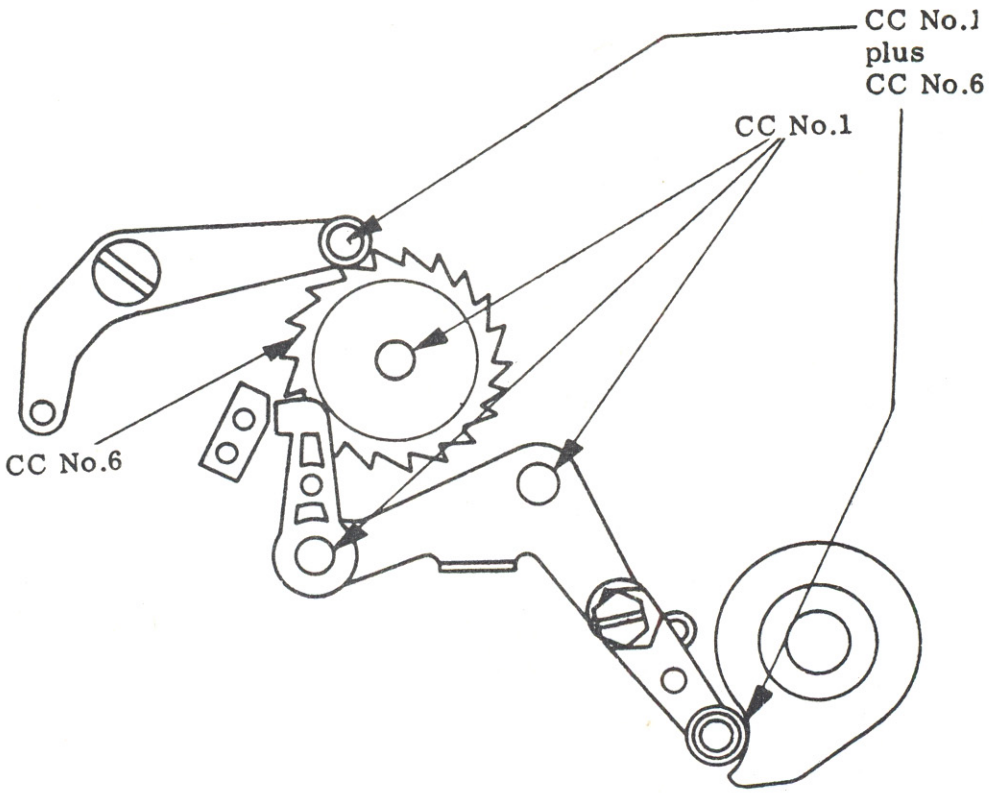

Figure 25 Tape Feed Mechanism

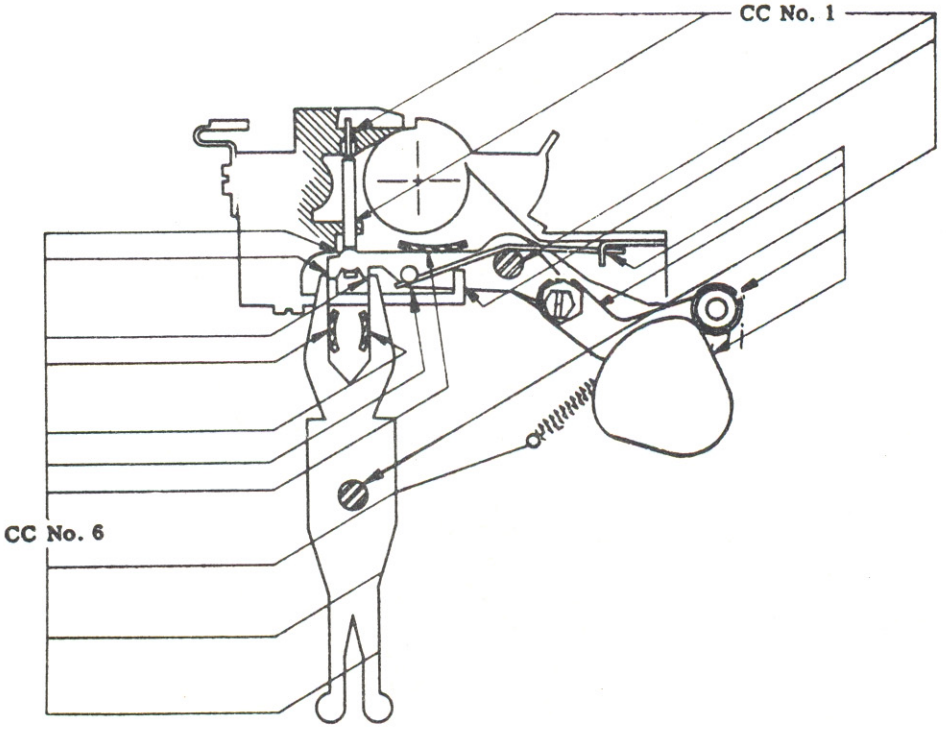

Figure 26 Pin & Contact Operating Mechanism

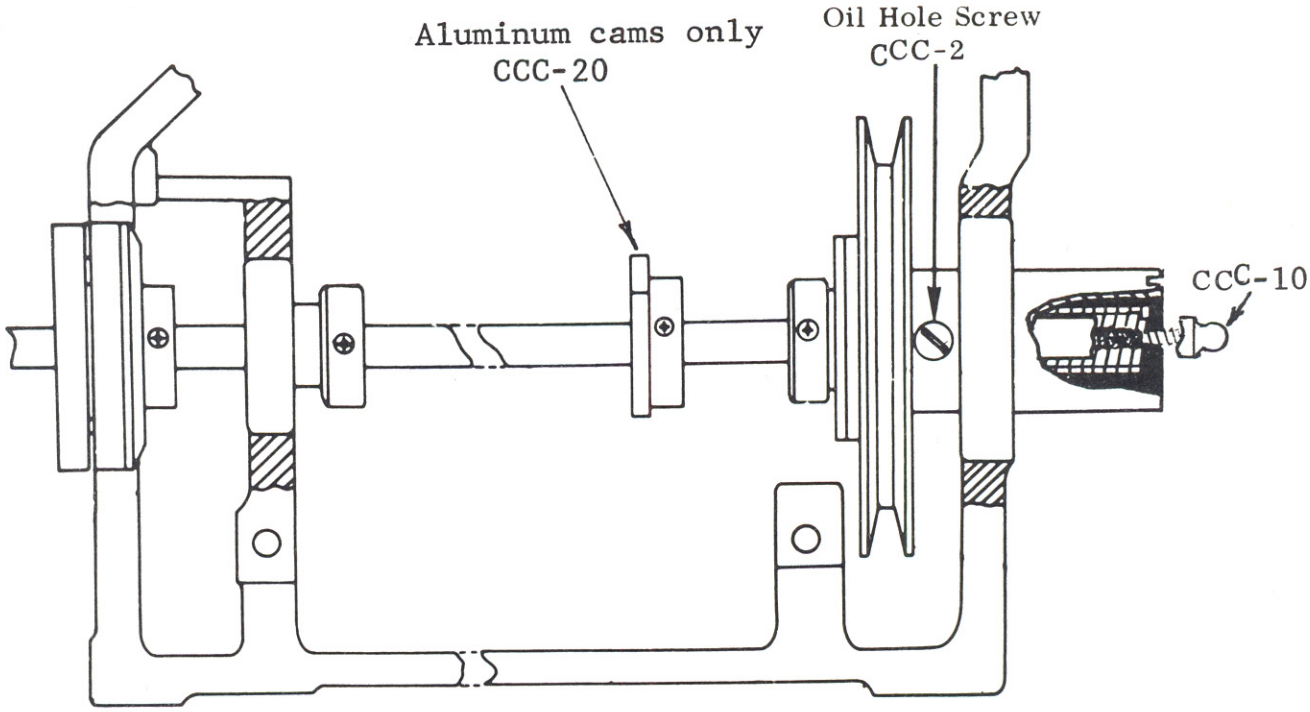

Figure 27 Power Frame

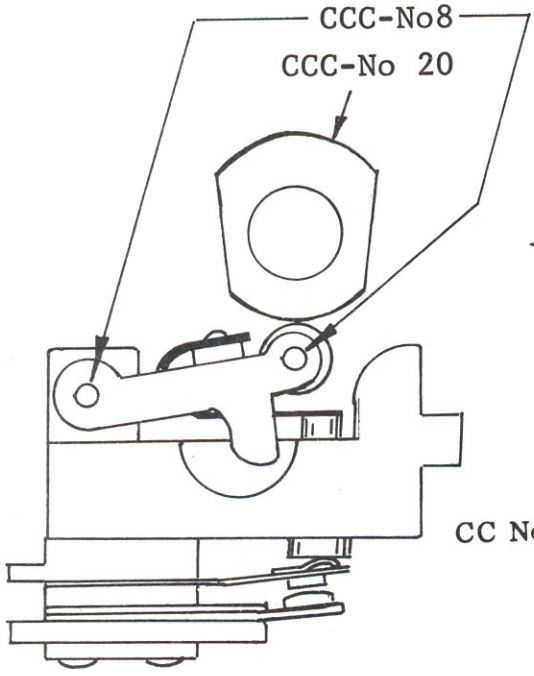

Fig. 27a
Cam Switch & Cam

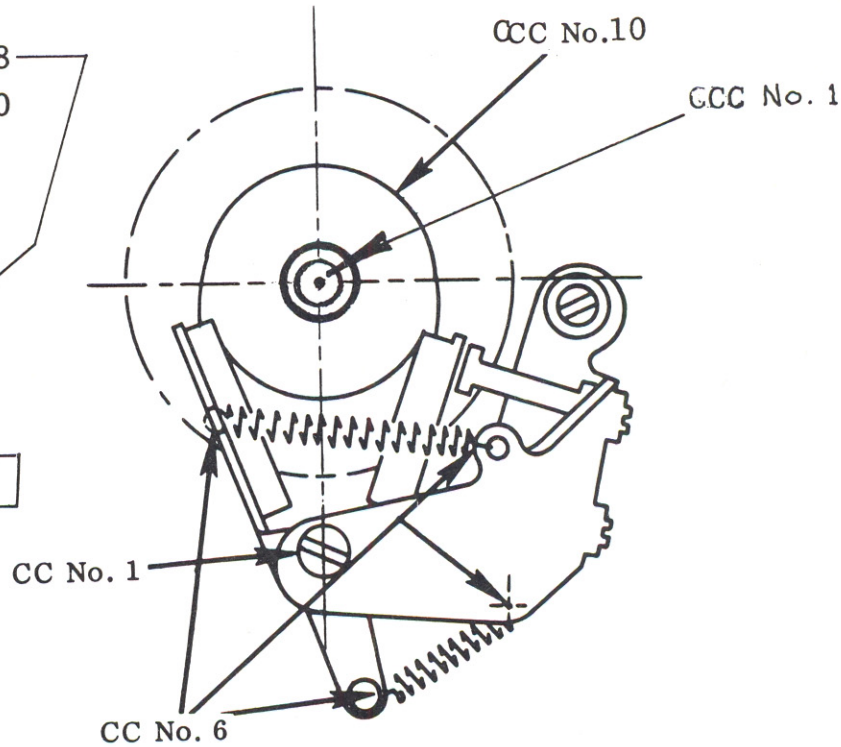

Figure 28 Clutch Mechanism

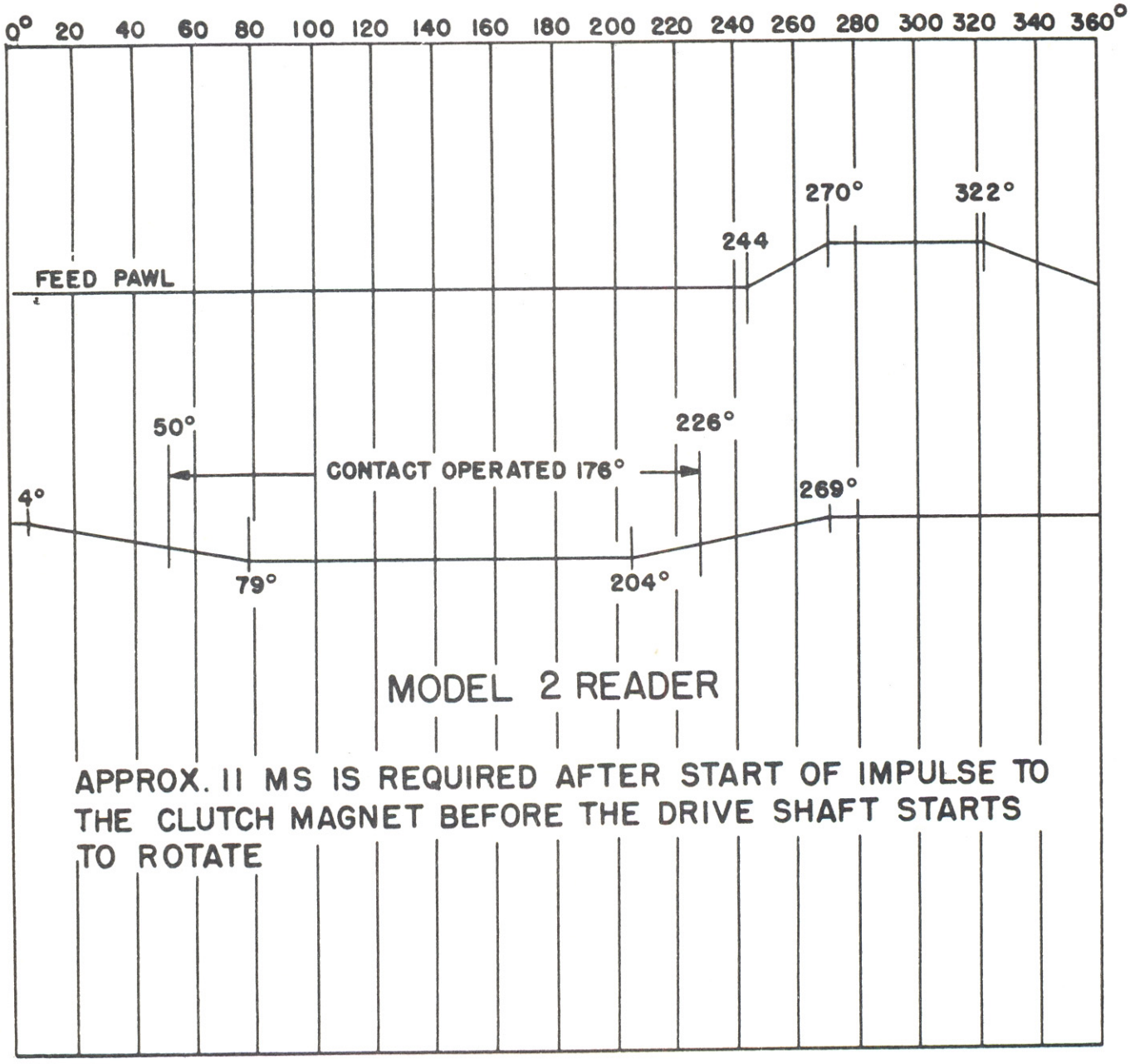

Figure 29 Timing Chart

TAPE READER CONTACTS - FIGURE 12

Electrical Parts
ORDER BY ASSEMBLY NUMBER

A = MAKE
B = BREAK
C = TRANSFER

← DIRECTION OF CONTACT MOVEMENT IN ALL SKETCHES

NOTE: COMPLETE ASSEMBLY MAY BE REVERSED FOR USE ON BOTH SIDES OF BANK

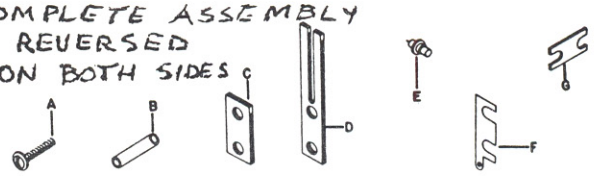

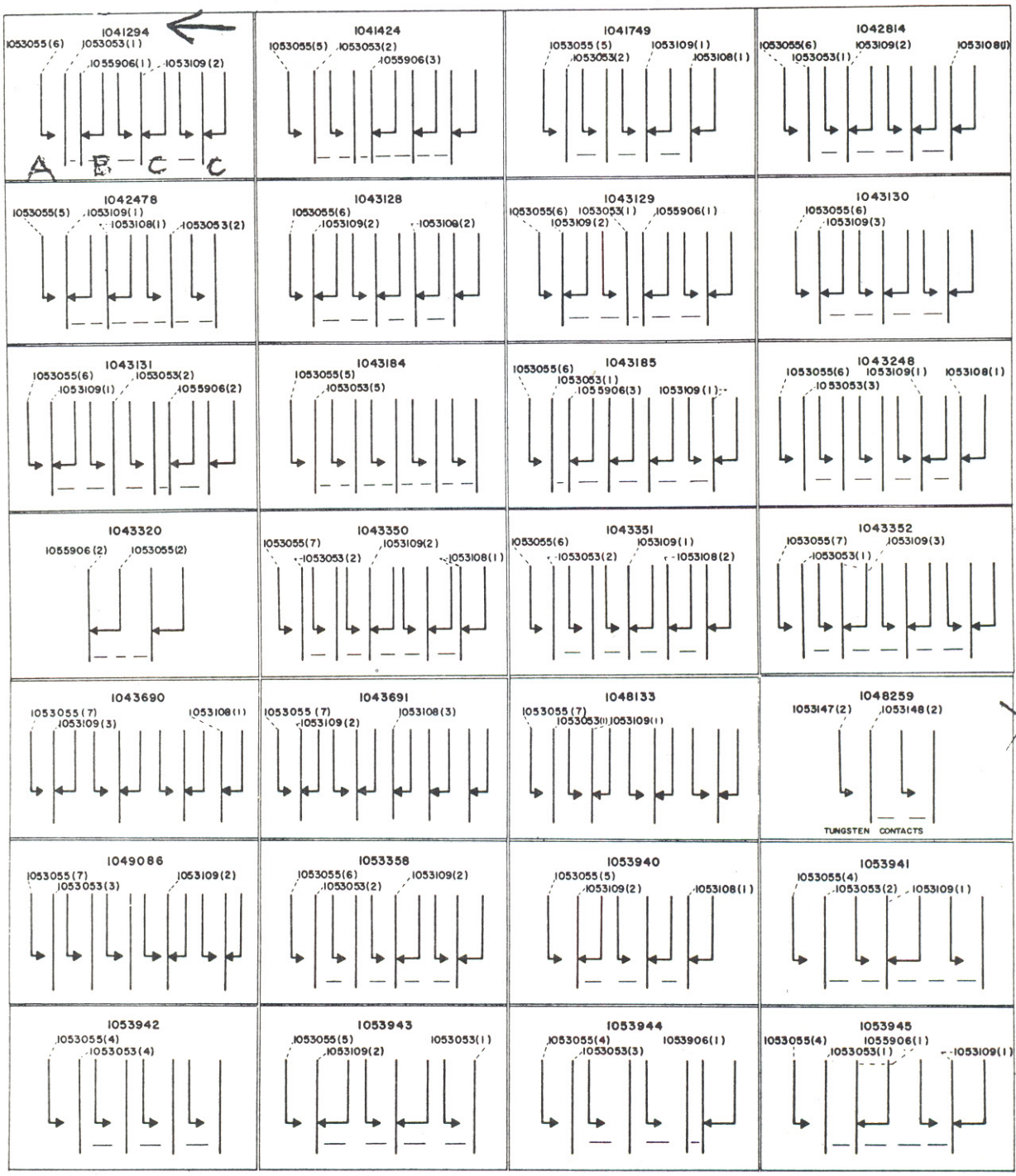

TAPE READER CONTACTS - FIGURE 12

Electrical Parts

Assembly Number	A	B	C	D	E	F
1041294	1058783	1058788	1058782	1053059	1053057/1053112	1053102
1041424	1058712	1058788	1058782	1053059	1053057/1053112	1053102
1041749	173211	25131	1058782	1053059	1053057/1053112	1053102
1042814	1058783	1040690	1058782	1053059	1053057/1053112	1053102
1042478	173212	25131	1058782	1053059	1053057/1053112	1053102
1043128	1058783	1040690	1058782	1053059	1053057/1053112	1053102
1043129	1058789	1058788	1058782	1053059	1053057/1053112	1053102
1043130	173212	1058713	1058782	1053059	1053057/1053112	1053102
1043131	1058789	1058788	1058782	1053059	1053057/1053112	1053102
1043184	1058783	1058713	1058782	1053059	1053057/1053112	1053102
1043185	1058789	1058788	1058782	1053059	1053057/1053112	1053102
1043248	1058789	1058788	1058782	1053059	1053057/1053112	1053102
1043320	173215	100229	302948 302949	1053059	1053057/1053112	1053102
1043350	1043909	1043903	1058782	1053059	1053057/1053112	1053102
1043351	1040362	1043151	1058782	1053059	1053057/1053112	1053102
1043352	1043910	1043902	1058782	1053059	1053057/1053112	1053102
1043690	1040339	1043902	1058782	1053059	1053057/1053112	1053102
1043691	1040337	1043903	1058782	1053059	1053057/1053112	1053102
1048133	1040337	1048643	302948	1053059	1053057/1053112	1053102
1048259	1053107	100229	302948 302949	1053059	1053057/1053112	1053102
1049086	1043909	1043903	1058782	1053059	1053057/1053112	1053102
1053358	1058783	1058788	1058782	1053059	1053057/1053112	1053102
1053940	173211	132622	302948	1053059	1053057/1053112	1053102
1053941	173209	133208	302948	1053059	1053057/1053112	1053102
1043942	173210	100098	302948	1053059	1053057/1053112	1053102
1053943	173211	132622	302948	1053059	1053057/1053112	1053102
1053944	173210	100098	302948	1053059	1053057/1053112	1053102
1053945	173209	133208	302948	1053059	1053057/1053112	1053102

G See "L" Figure 14, Electrical Parts Section

Friden, Inc.

TAPE READER CONTACTS - FIGURE 12-1

Electrical Parts

* USED IN 6100-6200 AB READER

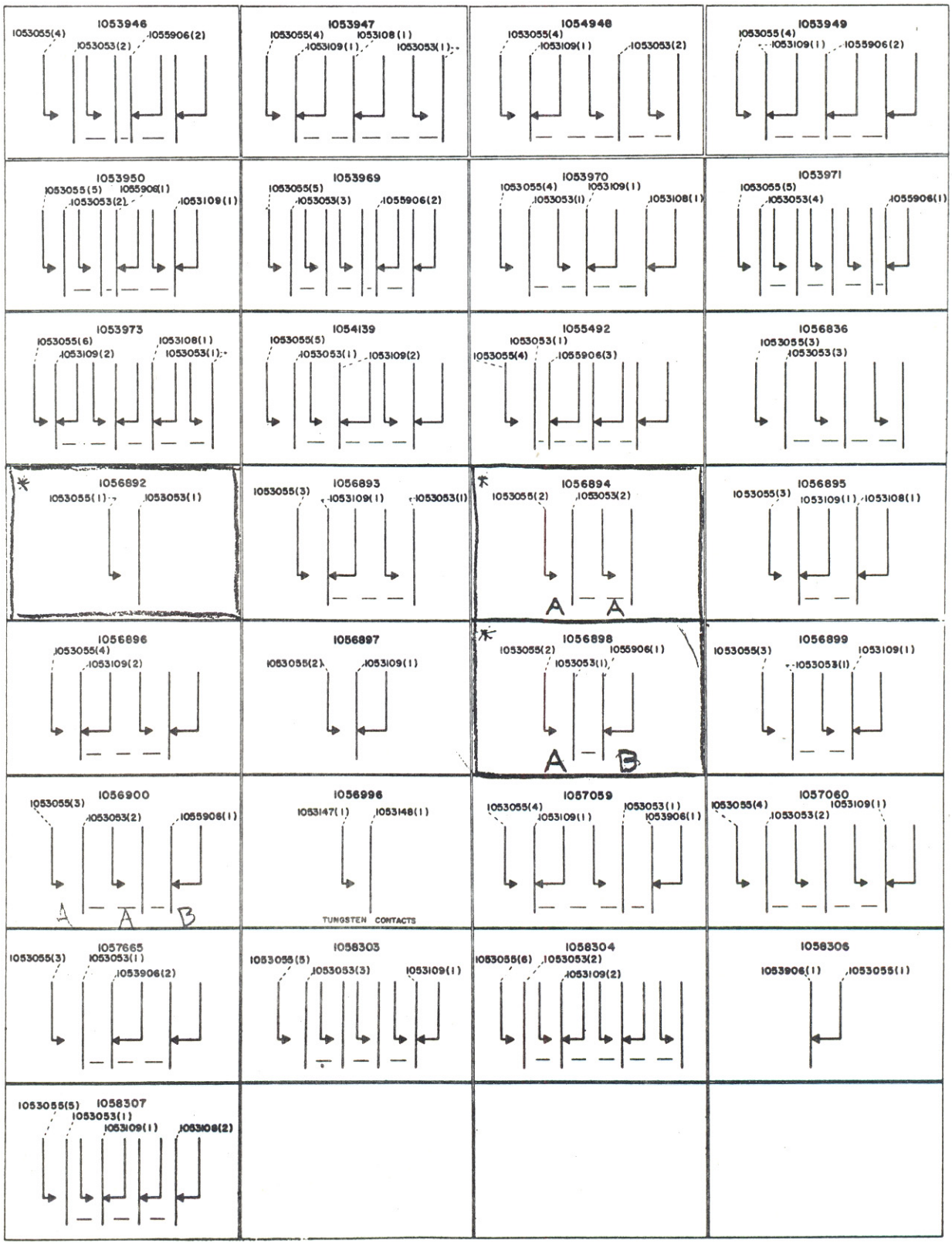

PUNCH PARITY CHECK - FIGURE 11

Electrical Parts

Ref. No.	Part No.	Part Name
A	1040300	Punch Parity Check Assembly (normally open)
A	1040290	Punch Parity Check Assembly (normally closed)
B	1046346	Upper Contact Assembly (normally open)
B	1046344	Upper Contact Assembly (normally closed)
C	1046345	Lower Contact Assembly (normally open)
C	1046343	Lower Contact Assembly (normally closed)
D	1046066	Punch Parity Check Casting
D1	2650	Screw for mounting B and C to D
D2	77063	Screw for mounting D to Punch Casting
D3	1090254	Washer for D2
E	1040307	Plate to retain Contact Operators
E1	1040304	Contact Operator, Lower
E2	1040303	Contact Operator, Upper
E3	186712	Screw for mounting Upper E to D
F	1053976	Terminal Block
F1	1058183	Screw for mounting F and Lower E
F2	1046272	Screw for Terminal Contacts

Motorized Tape Punch

Customer Service Manual

Table of Contents

Description 3
Specifications 3
- Tape Used 3
- Hole Size 3
- Feed Hole Spacing 3
- Feed Hole Location 3
- Operating Speed 3
- Clutch 3
- Code Magnets 4
- Tape Check Mechanism 4
- Motor Drive 4
- Auxiliary Contacts 4
- Punch Mounting 4
- Control Switches 4

Sequence of Operation 5
- External Connections 5
- Tape Supply 5
- Tape Rewind 5
- Chad Handling 5
- Auxiliary Equipment 5
- Size 5
- Weight 5

Punch Tape Contact Mechanism 11
- Hold Down Arm 11
- Run-Out-Arm 11

Tape Punch Removal, Assembly and Adjustment 13
- Tape Tension Arm 13
- Tape Punch Removal and Assembly 13
- Punch Magnet Assembly 13
- Punch Lever and Frame Assembly 15
- Punch Shaft and Cam Assembly 15
- Latch Lever and Bail Assembly 19
- Tape Feed Mechanism 19
- Punch Clutch Mechanism 22

Clutch Shaft 25
Clutch Pulley 26
Tape Rewind 26
Auxiliary Contacts and Cams 26
- Removal, Assembly and Adjustment 28
- Adjusting the Contact to the Cam 28
- Adjusting the Cam Position on Shaft 29

Circuit Description 30
- Motor Circuit 30
- Punch Tape Contact (PTC) 30
- Tape Feed Circuit 32
- Punch Select Relay Circuit 32
- Punch Magnet Circuits 33
- Punch on Light Circuit 33

Lubrication 35

Description

The Commercial Controls Motorized Tape Punch, Model 2 is designed for general applications involving the recording of information in a punched paper tape. It is in general a self-contained machine requiring only cable connections to the apparatus with which it is to be associated.

The tape punch has been designed for a wide variety of tape applications. It is capable of punching any number up to eight transversely spaced code holes. A simple adjustment permits the use of any width tape from eleven-sixteenths to one inch wide.

The punch unit is mechanically operated by a cam shaft which makes a single revolution for each punching cycle. This cam shaft is under control of an electro-magnetically controlled, single-revolution clutch for connecting the cam shaft to a constantly running drive pulley. A feed hole is always punched in the tape during each revolution of the cam shaft and individual electro-magnets control the punching of the code holes during each revolution. The clutch magnet and the individual code magnets are controlled by external control circuits.

Specifications

Tape Used	.687 to 1.000 inch wide
Hole Size	.046" diameter feed hole .072" diameter code hole
Feed Hole Spacing	.100" both longitudinally and transversely. The standard tape punch is constructed to punch feed holes in line with the code holes transversely of the tape, but special punches are available which punch the feed holes .013" in advance of the code holes.
Feed Hole Location	The standard punch is made for punching the feed holes .394" from the inner or guiding edge of the tape, but special punches are also available for punching these feed holes .4375" from the guiding edge.
Operating Speed	Standard parts are available for driving the punch at either 1000 r.p.m. or 1228 r.p.m., the later speed being sufficient to reliably punch codes supplied at the rate of 20 per second. Special drives can be provided for obtaining other punch operating speeds.
Clutch	A magnetically - operated, single-revolution clutch is used to drive the cam shaft on the punch. The control impulse for the clutch magnet should have a minimum dur-

ation of 15 milliseconds and should not exceed the cycle time of the driven cam shaft to avoid repeat operation. Clutch magnets are available for operation on 48 and 90 volts direct current.

Code Magnets — The code punched in the tape is selected by energizing individual code magnets for each unit of the code. The control impulse duration for the code magnets is the same as for the clutch magnet. The clutch and code magnets may be impulsed simultaneously at the start of each punch cycle. Code magnets are also available for operation on 48 and 90 volts direct current.

Tape Check Mechanism — The punch is provided with mechanism for operating contacts whenever the tape is excessively tight, or whenever the supply of tape is exhausted, or when the tape hold-down arm is not in position to hold the tape in feeding position against the pin wheel.

Motor Drive — The punch is equipped with a one-thirtieth horse power induction motor. A V-belt is used to connect the motor to a clutch shaft. The shaft is mounted in precision sealed ball bearings.

Auxiliary Contacts — A maximum of ten cam-operated contacts may be provided on the clutch shaft to operate in variable timed relation with the punch cycle. Each contact may be operated to close for various different portions of the cycle.

Punch Mounting — The punch is removably mounted as a unit on the clutch casting which is in turn mounted on a sheet metal base. The drive from the clutch shaft is through a separable coupling to the cam shaft of the punch.

Control Switches — A switch and indicating light bracket are provided in the front of the cover which can contain two toggle switches and one indicating light. One switch is normally used to control the power of the motor and the other to control the feeding of leader strips of tape. The indicating light is usually provided for indicating when the punch is in operating condition.

External Connections	A power cord and a separate control cable are attached to the Motorized Tape Punch. The control cable can terminate in any size connector but this cable is normally terminated in an AN3106A-24-28S (24 contacts) connector.
Tape Supply	A tape supply roll housing is removably mounted on the main cover. This accommodates a standard eight-inch diameter roll of tape containing approximately 1000 feet.
Tape Rewind	An optional rewind reel for the punched tape can be provided. This is a six-inch diameter reel driven by a spring belt from the clutch shaft. This can be omitted when not required.
Chad Handling	The chads punched from the tape are conducted by a vertical chute through the bottom of the cover on the punch unit. No container for collecting the chads is provided within the machine.
Auxiliary Equipment	Protecting fuses and terminal blocks are provided within the machine. When required up to three telephone type relays can also be mounted within the machine. Also when required, a full-wave rectifier can be mounted within the machine for providing about 70-watt D.C. supply at approximately 90 volts.
Size	Width: 12 1/2" Depth: 12 1/2" (19 1/2" with rewind reel.)
Weight	28 lbs.
Finish	Blue-gray fine wrinkle.

Sequence of Operation

The code punched in the tape is selected by energizing individual code magnets (punch magnets) for each unit of the code. The punch magnets & clutch magnet are normally impulsed simultaneously. (This control impulse should have a minimum duration of 15 milliseconds and should not exceed the cycle time of the driven cam shaft to avoid repeat operation.)

When the punch clutch magnet is energized, the clutch connects the constantly running drive pulley with the punch cam shaft.

The mechanical operation of the clutch is as follows: (See Figure 3)

The clutch spring (301) is close wound and made from rectangular wire. The dimension of the inside diameter when the spring is not expanded is held very accurately. This insures a secure grip on both

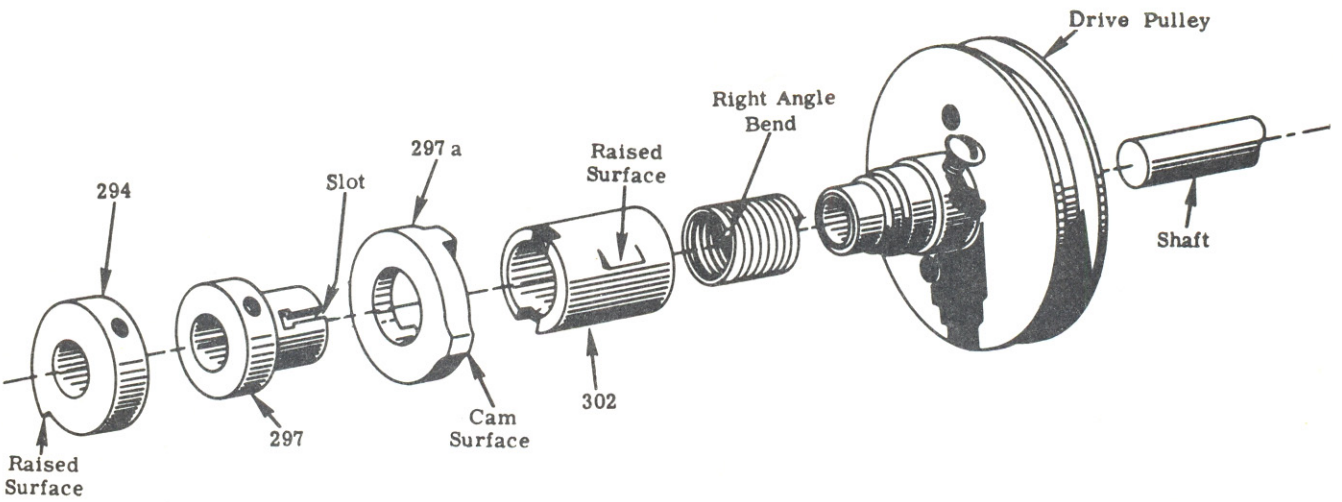

Figure 3 - Clutch Mechanism Disassembled

the drive hub and the clutch collar (297) on which the ends of this spring assemble.

The end of the spring (301) which the clutch collar assembles has a right angle bend. This bend fits into a slot in the collar.

The opposite end of the clutch spring strikes against a protruding point on the inside of sleeve 302.

The spring, when assembled, will ride over the clutch collar as far as the end of the slot. The other end will ride the drive hub. The sleeve itself will assemble over the spring and the two ends will fit the surface provided for it on both the drive hub and the clutch collar.

When the clutch magnet is not energized and its armature is resting against the raised edge of the clutch sleeve (302), the spring (301) is expanded enough so that it does not grip the drive hub. Therefore, the drive pulley is allowed to rotate freely without turning the cam shaft.

If the armature is operated (due to the clutch magnet being energized) the tension of the spring (301), due to it being slightly forced in an unwound position, will be exerted against the sleeve (302) by the end of the spring in the slot. This will cause the sleeve to start to rotate, allowing the spring to grip the drive hub. The drive pulleys motion will rotate the spring & also tend to wind the spring tighter.

The rotation of the spring will be transferred to the collar (297), the detent (294), and finally the cam shaft.

The spring rotation also causes the rotation of sleeve 302, due to the end of the spring riding against the protruding point on the sleeve's inner surface.

When the clutch armature is released, it will engage the raised edge on the sleeve (302) (near the end of the punch cycle), and the rotation of the sleeve will be stopped.

The rotation of the spring will exert a pressure against the edge of the slot which will tend to unwind the spring. This will

increase the I.D. such that the spring no longer grips the drive hub, thus allowing the drive pulley to run free again.

The speed of rotation will cause the detent (294) to overthrow and lock in position so that the spring is held with this enlarged I.D. until the armature is again released.

Also, a knockoff cam and overtravel stop (297a) is used for greater efficiency of operation at high speeds. This cam is set screwed to the collar 297 in such a manner as to limit the overtravel of the clutch. This stopping action is necessary to prevent unnecessary movement after the clutch is detented.

The cam surface is used to operate an armature knockoff bail for positive release of the clutch armature away from the cores of the clutch magnet.

When a punch magnet is energized, its armature (351) will be attracted to the core.

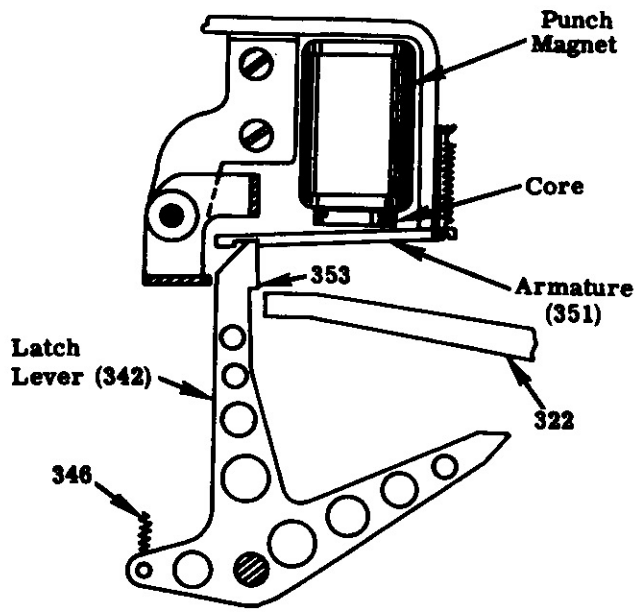

Figure 4 - Punch Magnet and Latch Lever

In so doing, the latch lever (342) will pivot in a clockwise direction (Figure 4) because of the tension of spring (346). The point 353 of the latch lever will engage with the tip of punch lever (322).

When the punch cam shaft (315) starts its rotation, the following actions take place.

The roller (358) of the latch lock bail (357) reaches the low side of cam 354 (approx. 60 degrees). This will move the latch lock bail so that it will lock the latch levers in their latched or unlatched position. (See Figure 5). Also, the movement of the latch lock bail will operate the punch lock contacts (PLC).

Following the locking of the punch latch levers, the punch lever and frame assembly (324) begins to rise by action of cam 335 (Figure 6). During the upward movement of lever and frame assembly (324), the rod (323), on which the punch levers (322) are pivoted, is also moved upward. If the left hand ends of the punch levers (322) are not held down against the stop rod (327) by their respective latch levers (342), then the left hand end will be moved upward while the right hand end will be held down by the tension of spring 328. On the other hand, if the left hand ends of the punch levers are engaged by their respective latch levers and held against stop 327, the upward movement of rod 323 will move the right hand end of the punch levers upward. This upward movement of the punch levers will carry their respective code punches upward through the tape, punching a code for those

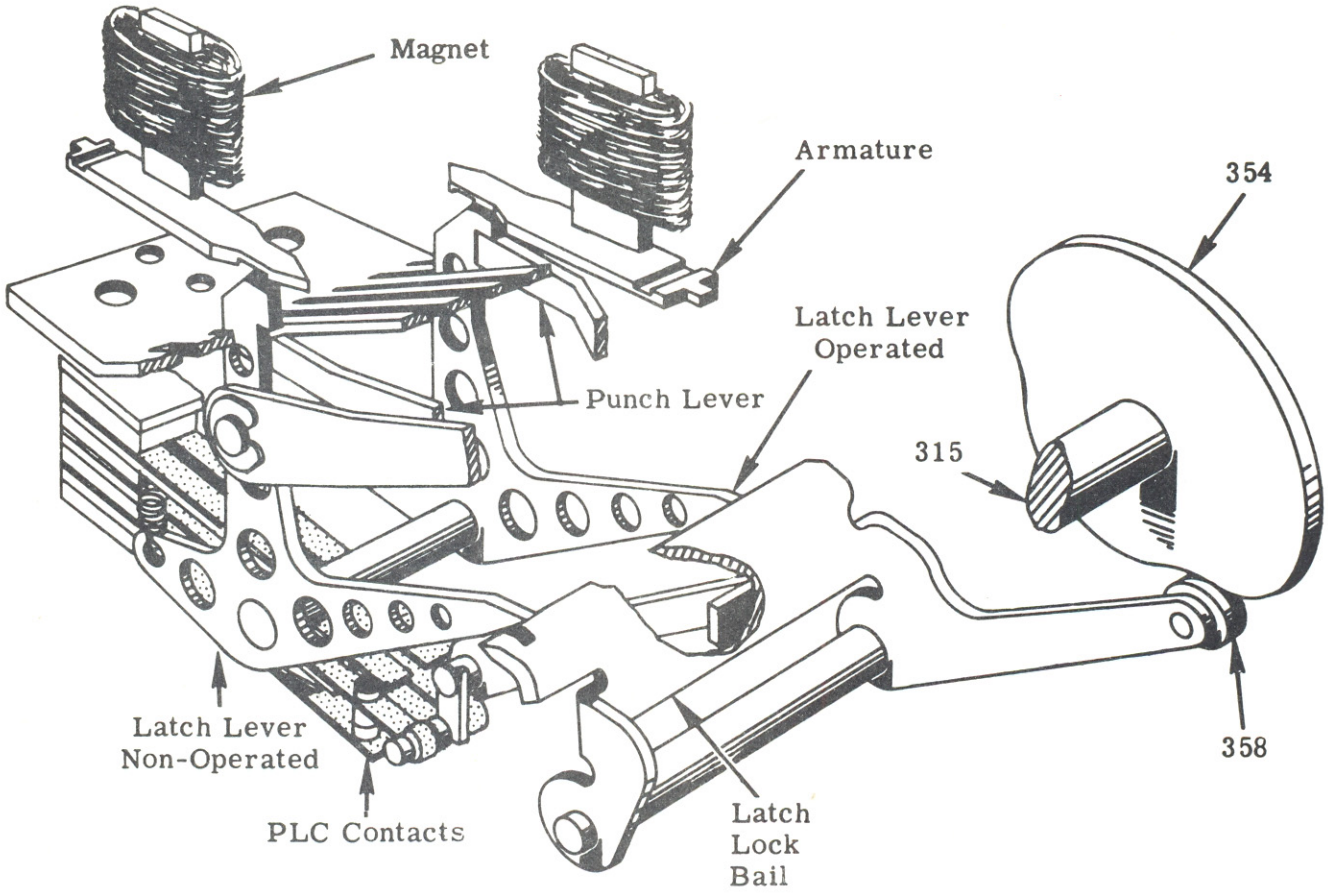

Figure 5 - Latch Lock Bail

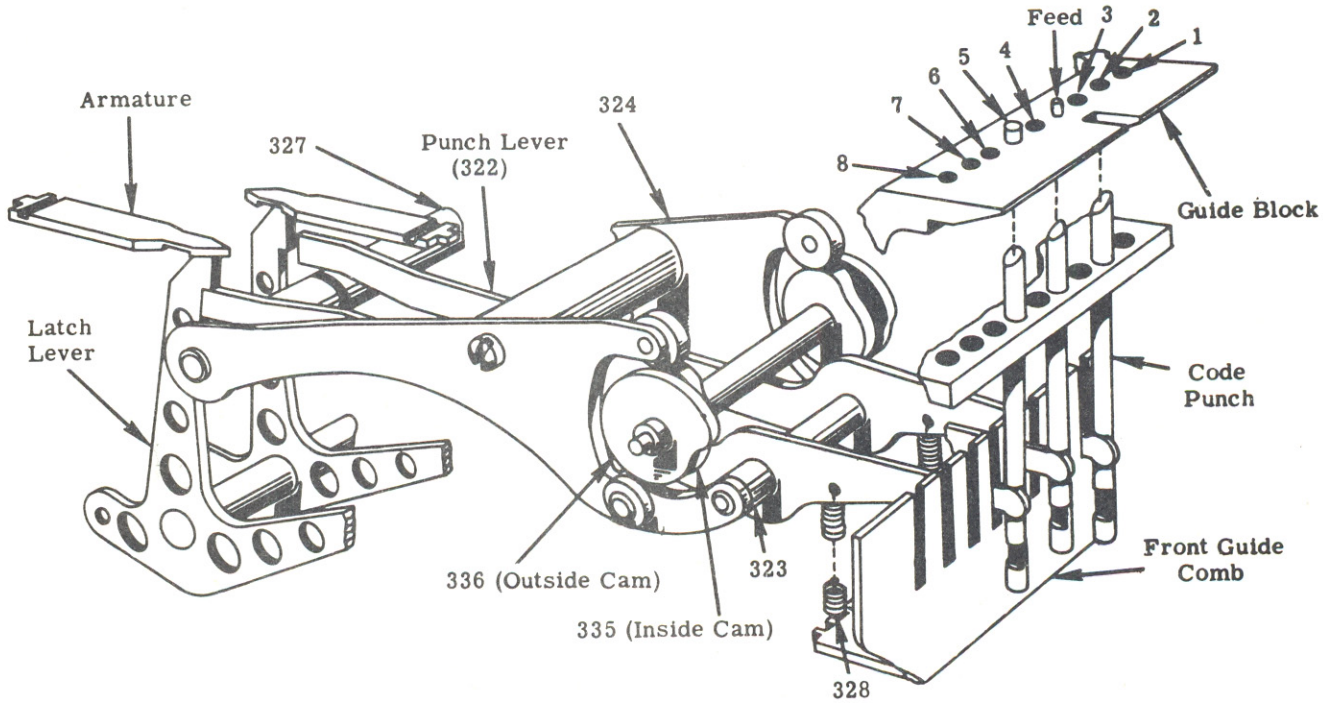

Figure 6 - Latch, Operating Lever and Punch

positions for which the punch magnet has been energized. (The punching takes place at approx. 178 degrees rotation of the cam shaft.)

The punch lever corresponding to the feed punch position is permanently held down against stop 327 by a fixed arm. Therefore, for each revolution of shaft 315, a feed hole will be perforated in the tape.

When the punches have traveled their maximum upward movement, the latch lock bail (357), due to cam 354, starts its movement away from the latch levers (approx. 180 degrees).

During the unlocking of the punch levers, cam 336 returns the punch lever and frame assembly (324). This causes the punches to be returned from the die and to their normal position.

During the mid-part of the punch cycle (the latch lock bail (357) has moved back past the tip of the latch levers), the stud (380) engages the outer end of latch lever restoring bail (379), (Figure 7). This action pivots the restoring bail counter-clockwise on its pivot (343). Thus, the restoring bail engages all of the latch levers (342) and moves them counter-clockwise past their armature latching position. In so doing, the lower-most latch lever engages an arm of

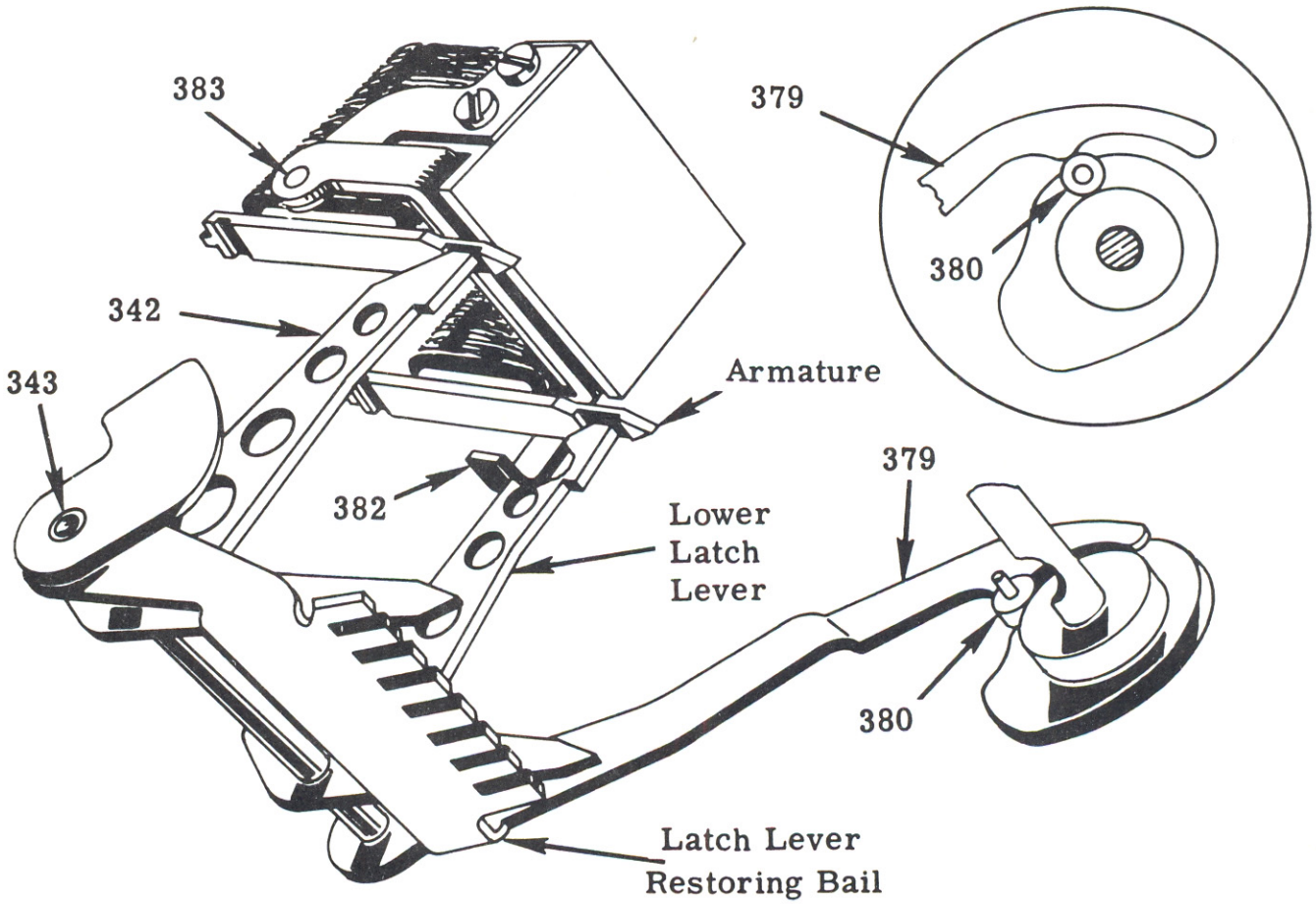

Figure 7 - Latch Lever Restoring

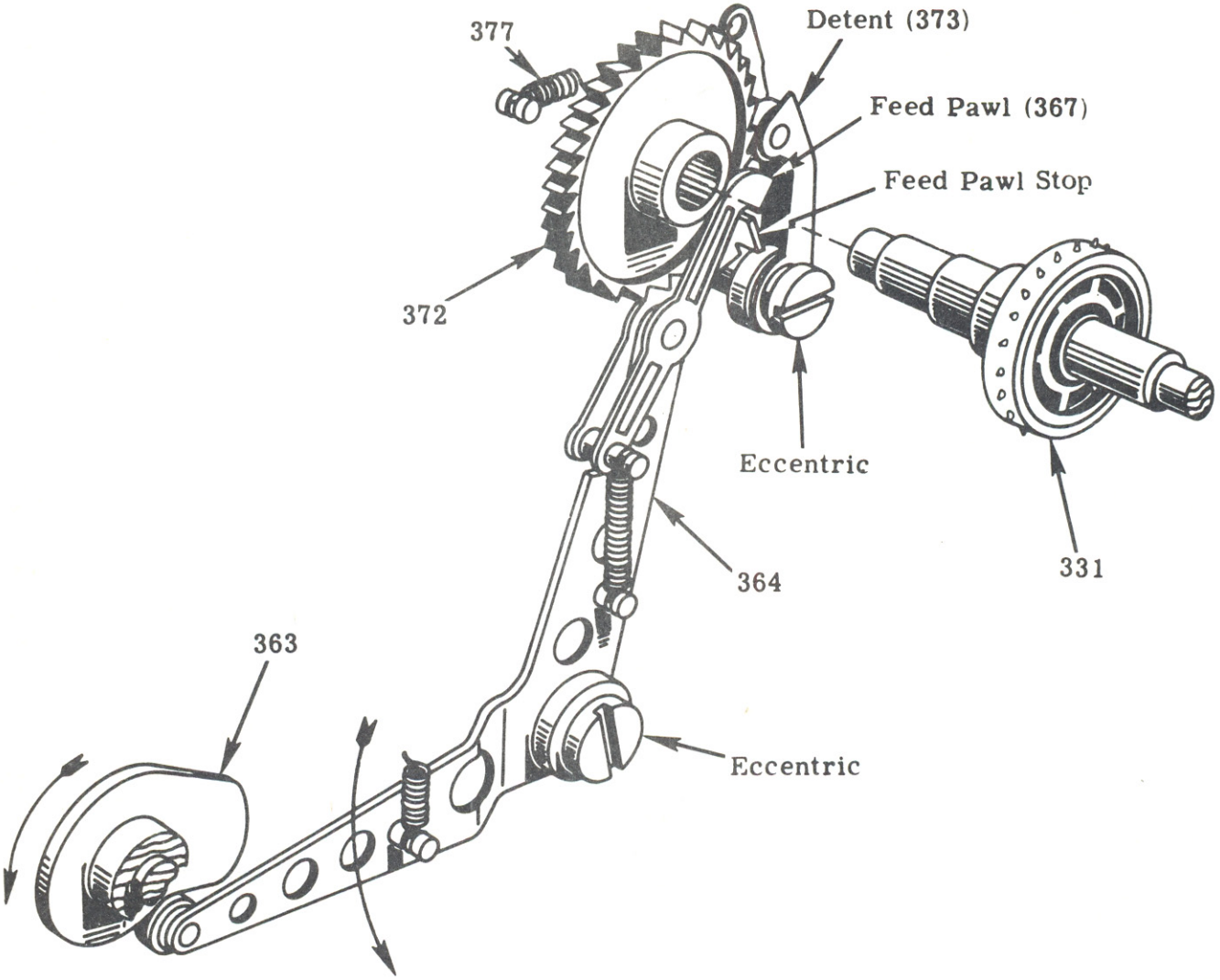

Figure 8 - Tape Feed Mechanism

the knockoff bail (382) which pivots on a rod (383). The knockoff bail (382) will pivot in a clockwise direction and engage and release any armature which may be stuck against its punch magnet core. Thus, all armatures (351) will be positioned against the ends of their related latch levers and held there by their related springs (352).

When the knockoff action is completed, stud 380 allows the restoring bail (379) to return to its normal position. Thus, the latch levers (342), due to their related springs (346), will move clockwise until they engage in the notch of their respective armatures.

During the latch restoring and armature knockoff operation just explained, the feed pawl lever arm (364) starts rotating in a counter-clockwise direction, due to cam 363. (Figure 8). This moves the feed pawl (367), engaging a tooth and indexing the ratchet wheel in a clockwise direction. The rotation of the ratchet wheel (372) will rotate the tape feed sprocket (331) and, in turn, advance the tape 1/10 of an inch.

A detent lever (373) is adapted to engage the teeth of the ratchet wheel. The spring (377) keeps the roller of lever (373) in contact with the teeth of the ratchet wheel (372) and thereby stabilizing the operation of the tape feed mechansim.

Punch Tape Contact Mechanism

To prevent the machine from operating when the tape runs out, the tape binds or the hold down arm is not in operating position, there are provided three arms, namely. the runout arm, the tension arm and the tape hold down arm.

The following explains the operation of each of the above mentioned levers: (See Figure 9).

Hold Down Arm - When the tape hold down arm is pivoted clockwise, link 391 moves in the direction shown. The link (391) will move the run-out arm upward pulling link 398 in the direction shown. This will pivot bail 400 clockwise, opening the PTC contact.

Run-Out-Arm - If the tape tears or runs out, the run-out arm will drop below the tape table, pulling on arm 398 and pivoting bail 400 so that the PTC contact will open.

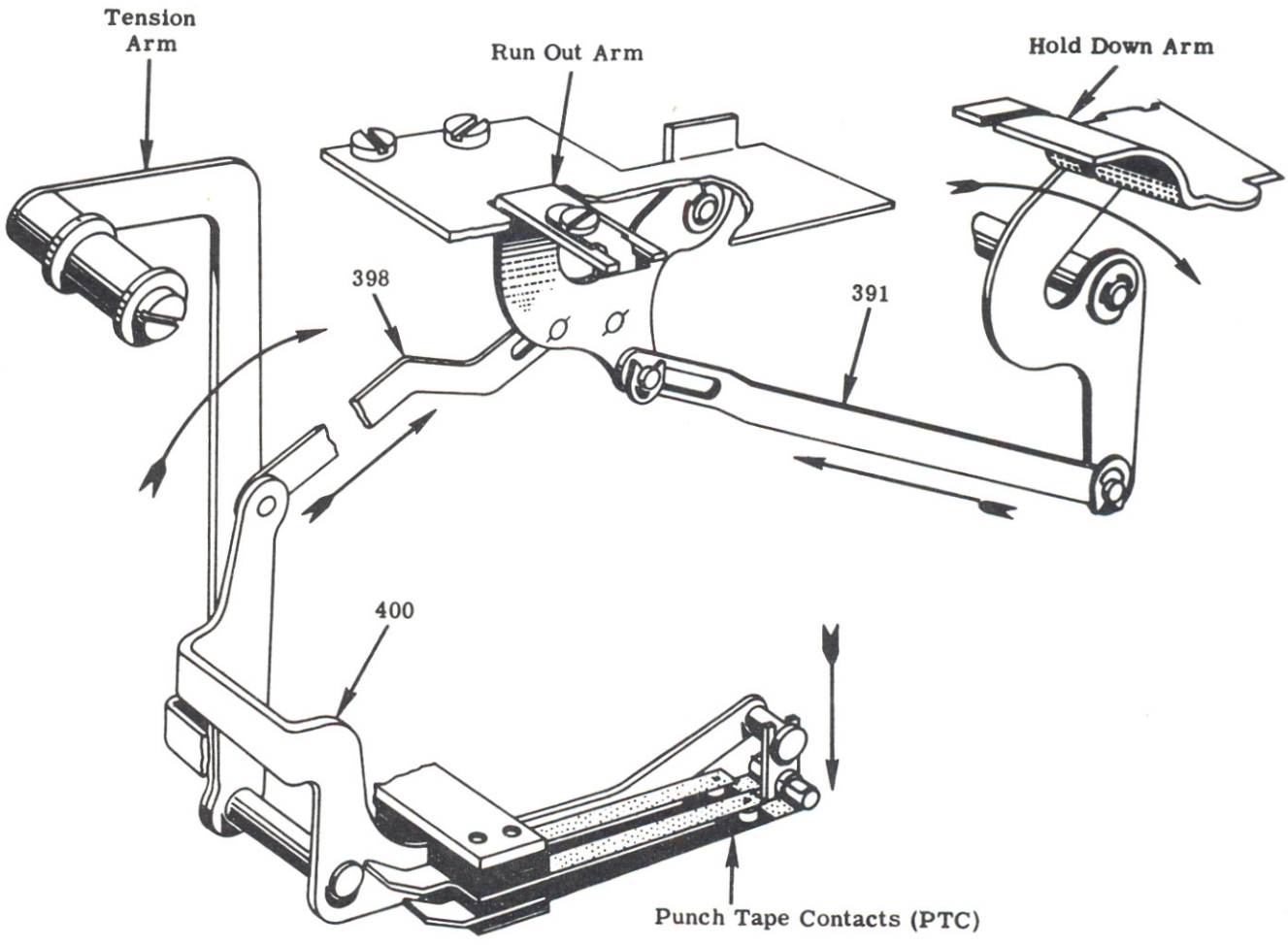

Figure 9 - Punch Tape Contact Mechanism

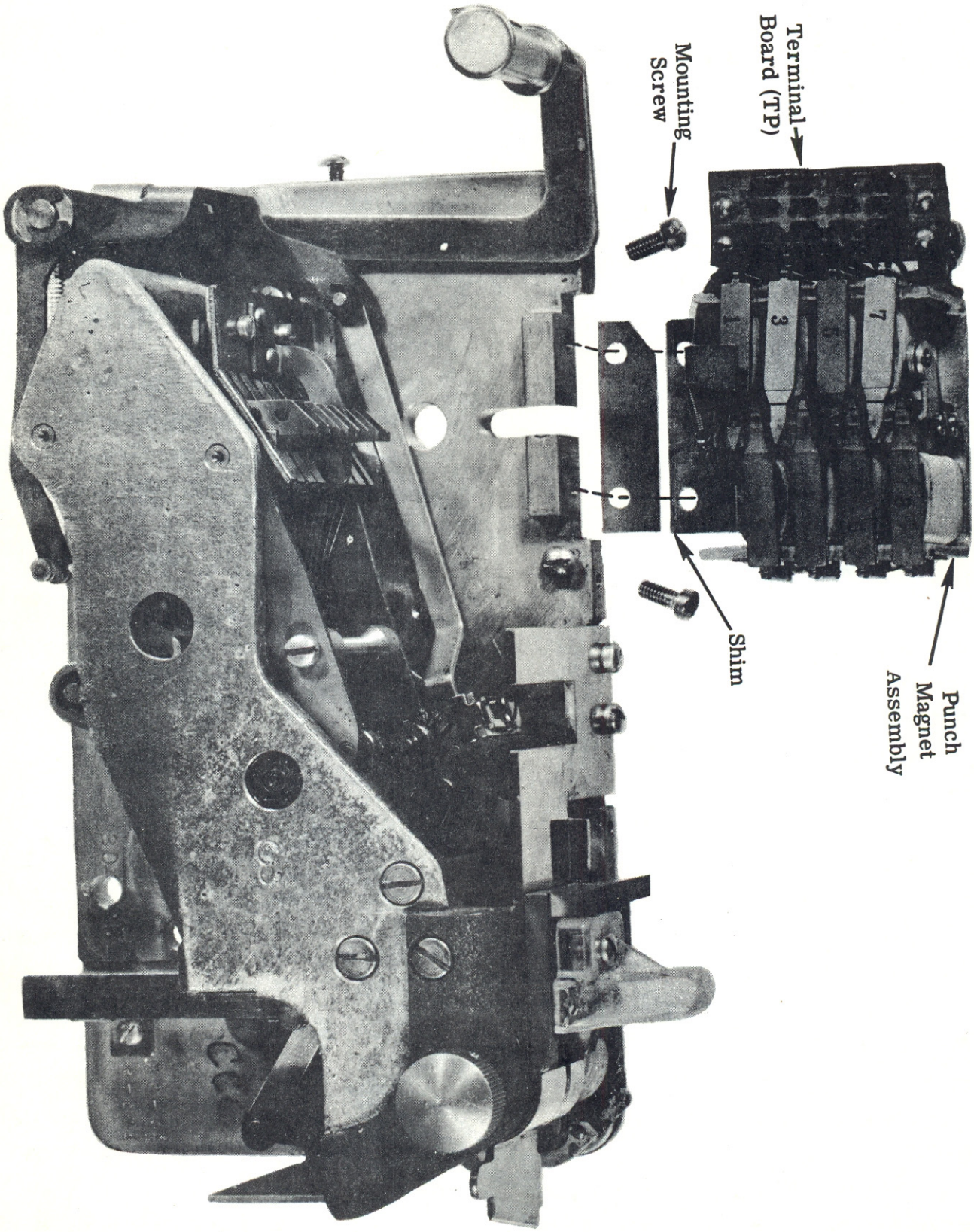

Figure 10 - Removal of Punch Magnet Assembly

Tape Tension Arm - If the tape binds during operation, the tension arm will move in the direction shown, contacting bail 400 and opening the PTC contact.

Tape Punch Removal, Assembly and Adjustments

Tape Punch Removal & Assembly - To remove the punch unit, proceed as follows:

1. Remove the punch cover.
2. Remove the punch from the casting by backing off two mounting screws.
3. If it is necessary to disengage the punch from the main frame it will be necessary to disconnect the cable leads from the terminal block and contacts.
4. Assemble the punch unit to the main frame in the reverse procedure of steps 1 through 3.

Punch Magnet Assembly - To remove the complete punch magnet assembly, proceed as follows: (Refer to Figure 10)

1. Remove the punch from the main frame.
2. Remove the top punch cover.
3. Remove two mounting screws and carefully remove the punch magnet assembly. Be sure to identify and save any shims that may be located between the punch magnet frame and the punch base.

If it is necessary to change a punch magnet coil, proceed as follows:

1. Using a thin sharp knife, cut the insulation on the coil to be replaced. Be very careful not to injure the adjoining coils.
2. Unravel the coil, starting from the front. Remove the coil leads from the terminal board.
3. Clean the core thoroughly of any insulation or glue. Be careful not to injure the front face of the core.
4. Place a light coating of glue on the core. Press the new coil on the core, being sure to thread the leads through the frame holes provided.

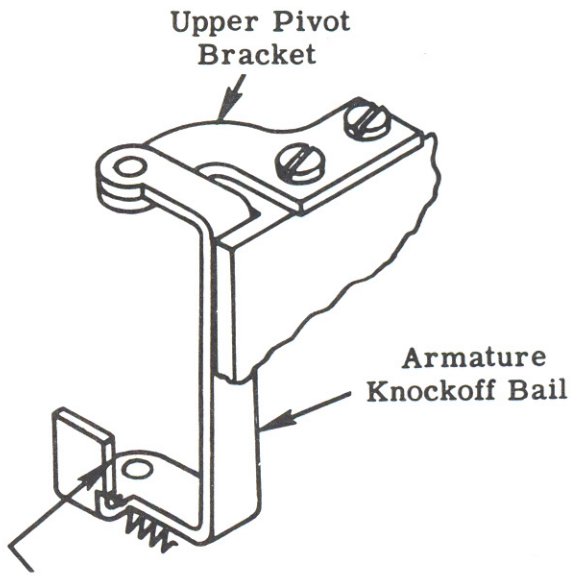

Figure 11 - Adjustment of Knockoff Bail

To assemble and adjust the complete magnet and armature assembly, proceed as follows:

1. Before mounting, check the knockoff bail to be sure it moves all armatures simultaneously. Move the upper and lower pivot brackets to obtain the correct movement of the bail (Figure 11).
2. Mount the magnet assembly to the punch base with two screws. Place shims between the magnet frame and the punch base

to provide a .003" to .005" clearance between the tip of the latch levers and the armatures (armatures attracted, see Figure 12).

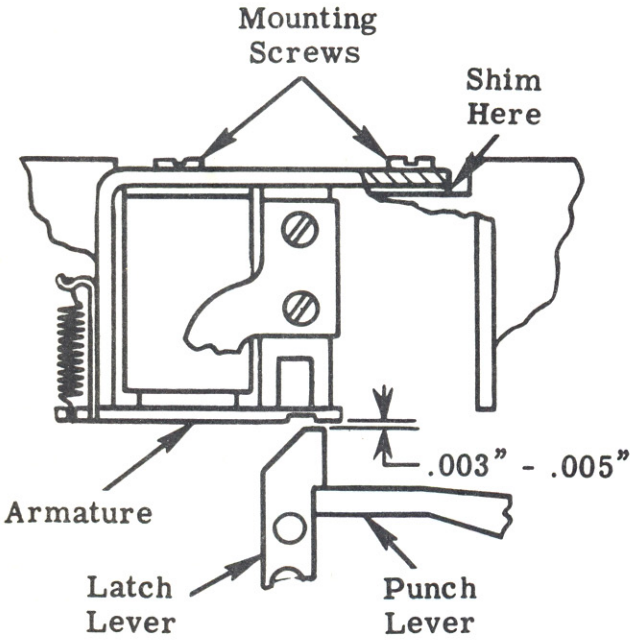

Figure 12 - Shimming of Punch Magnet Assembly

3. The magnet assembly should be adjusted horizontally on the casting to give .015" to .025" gap between the front edge of the latches and the rear end of the punch

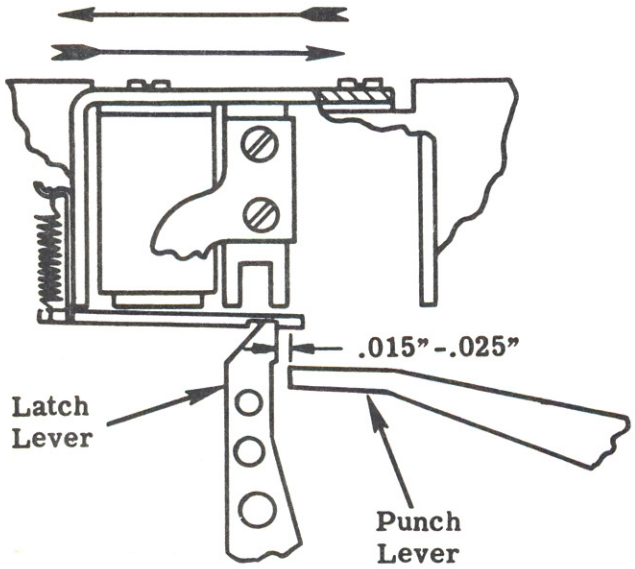

Figure 13 - Horizontal Adjustment

levers (latches should be engaged with their armatures). (See Figure 13)

4. With the latch restoring bail in its extreme operated position, the knockoff bail should allow from .001" to .003" movement of all armatures. The inside finger of the restoring bail may be formed slightly to alter the movement of the inside latch which operates the knockoff bail. Care should be taken not to bend this finger so far that it will limit the proper latching action of the inside latch over the rear end of the punch lever. Also, the full operated position of the latch restoring bail should allow .015" to .031" overtravel between the front edge of the latch lever & the armature latching surface. (See Figure 14)

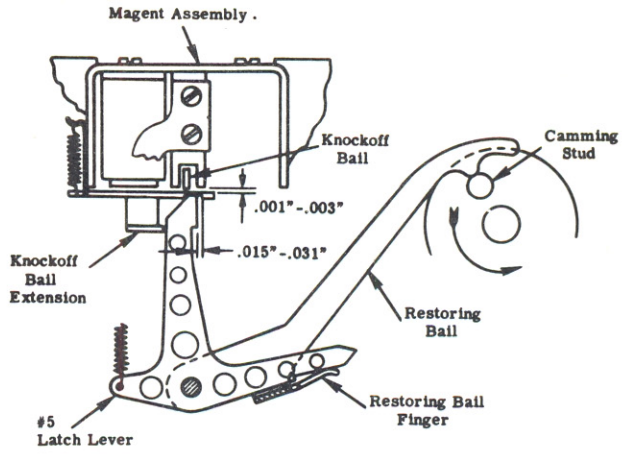

Figure 14 - Knockoff Adjustment

5. Adjust the eccentric pivot stud for the latch lock bail so that the bail has equal holding on a latch in the tripped position, as well as a latch in the normal position. (See Figure 15)

6. Adjust the front punch lever guide comb, with the use of shims, so that the levers properly engage the punch pins. Also,

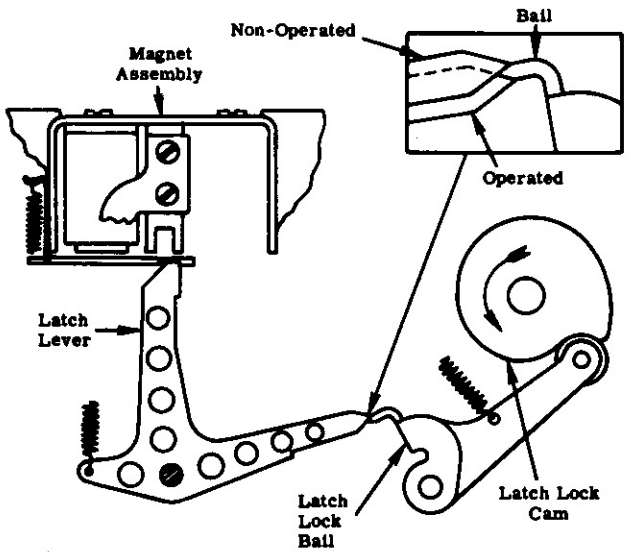

Figure 15 - Latch Lock Adjustment

when the punches are withdrawn from the die, the rear ends of the punch levers should not be able to move upwardly far enough to prevent latching. (See Figure 16)

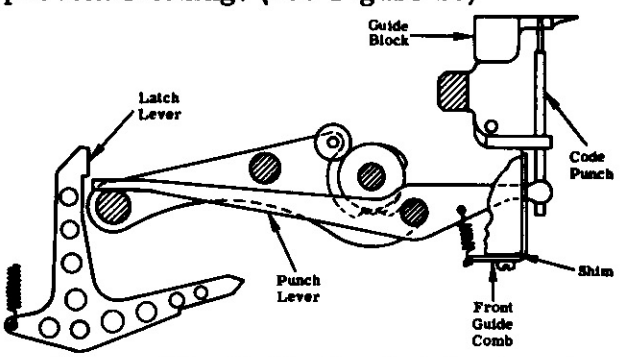

Figure 16 - Guide Comb Adjustment

Punch Lever and Frame Assembly

(Figure 17) - If it is necessary to remove the punch lever and frame assembly, the following removal procedure is recommended:

1. Unhook the punch lever tension springs (328) from the front punch lever guide comb (329).

2. Remove two screws and remove the front guide comb (329).

3. Loosen the set screw and remove the feed shaft knob. Remove three screws and remove the outside casting.

4. Remove the punch magnet assembly. (Refer to Page 13)

5. Remove two screws and remove the rear guide comb (345). This will also allow the latch lever spring bracket (348) to fall free.

6. Starting with the top punch lever, move the lever up until it is free of the punch slot and remove the punch from the guide and die block. Remove all punches in this manner. Be sure to identify the position of each punch in the guide and die block and replace the punches in exactly the same position.

7. Remove the Tru-Arc retainer on shaft 327. Carefully raise the punch lever and frame assembly upward off shaft 327.

To assemble the punch lever and frame assembly, proceed in the reverse of disassembly and then refer to the following:

Assemble and adjust the magnet and armature assembly as explained on Page 13.

Punch Shaft And Cam Assembly

(Figure 18) - If it is necessary to remove the complete punch shaft and cam assembly, proceed as follows:

1. Remove the punch lever and frame assembly, as explained on Page 15.

2. Unhook the latch lock bail spring (359) from the latch lock bail (357).

3. Drive out the spring pin and remove the drive coupling from the shaft. Pull the complete shaft and cam assemby out through the front of the punch. When removing the

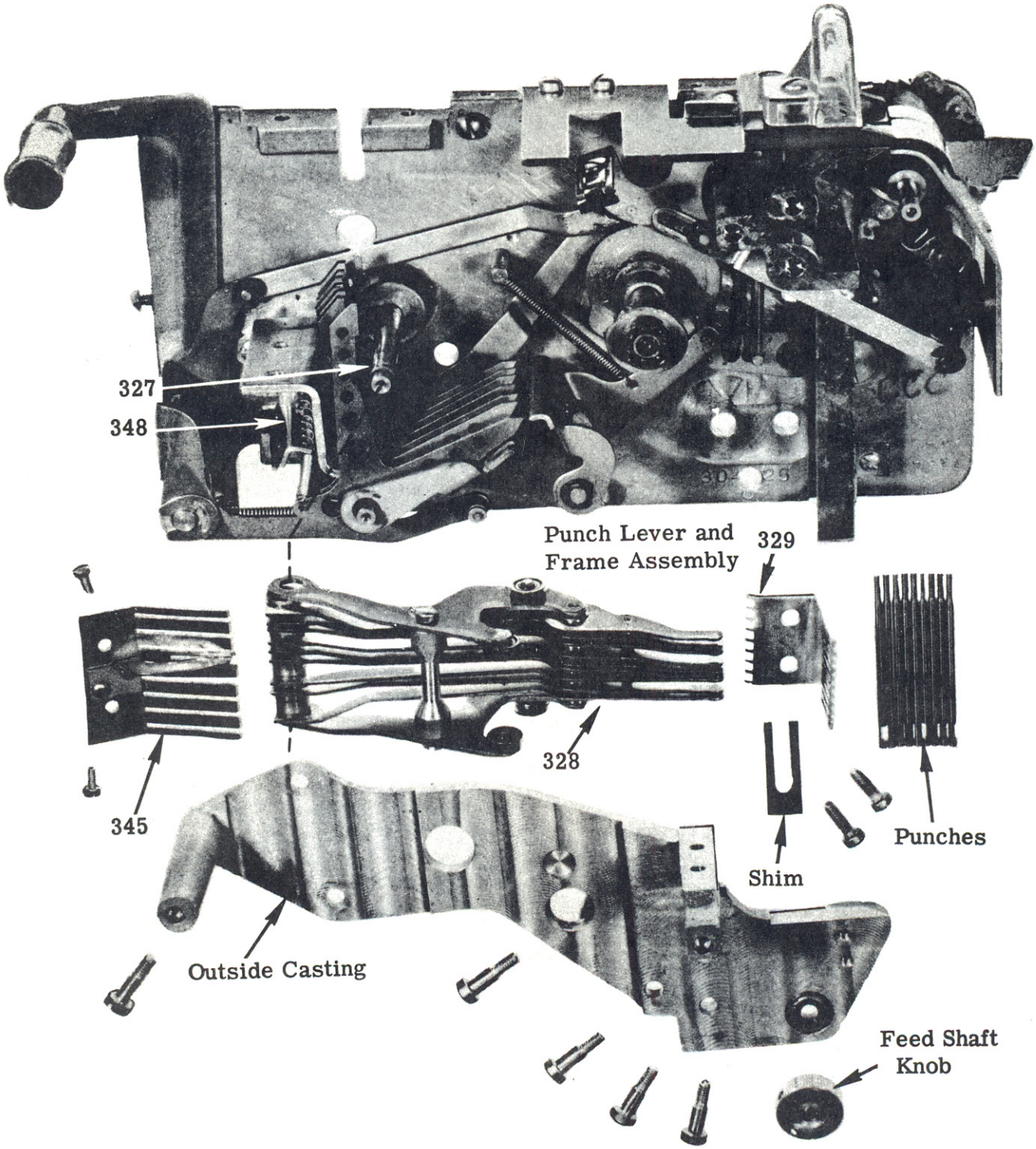

Figure 17 - Removal of Punch Lever and Frame Assembly

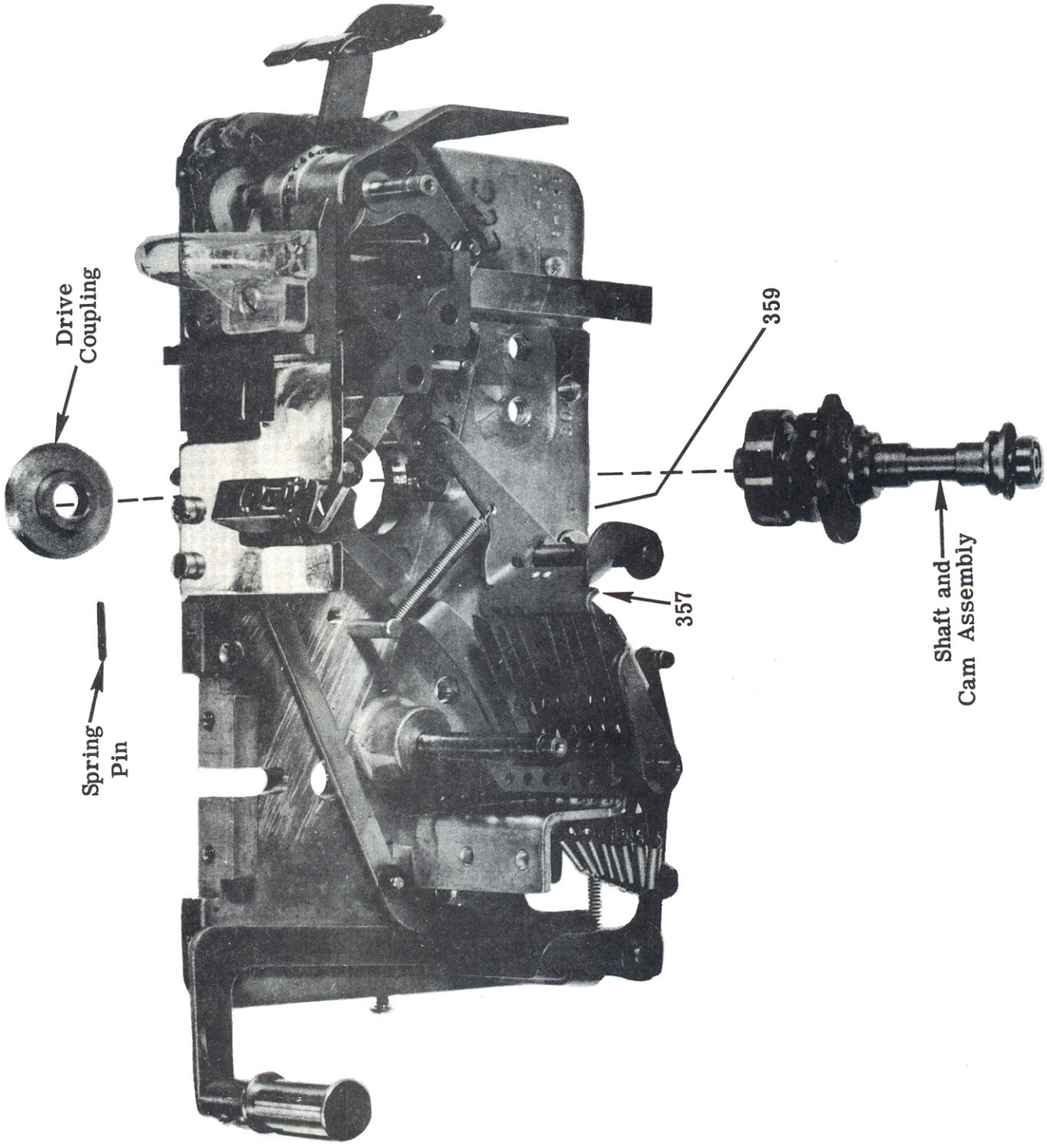

Figure 18 - Removal of Punch Shaft and Cam Assembly

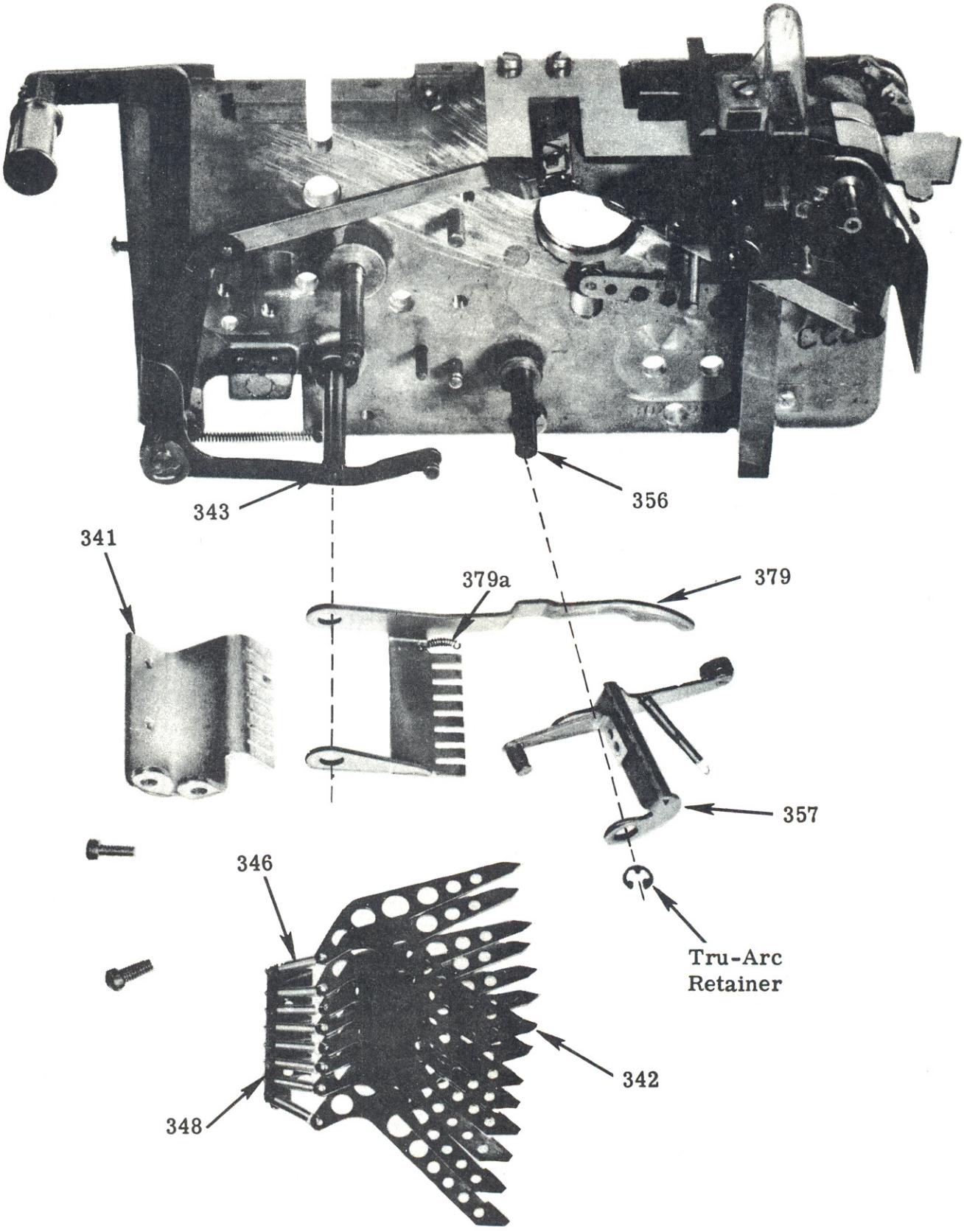

Figure 19 - Removal of Latch Lever and Bail Assembly

shaft assembly, be sure to move the restoring bail arm, the feed lever arm and the latch lock bail arm clear of the cams on the shaft.

To assemble and make necessary adjustments of the complete punch shaft and cam assembly, proceed as follows:

1. Slide the shaft assembly through the casting and assemble the drive coupling on the shaft with a spring pin.

2. Hook the latch lock bail spring (359) to the latch lock bail (357).

3. Assemble the punch lever and frame assembly (324) as explained on Page 15 .

Latch Lever and Bail Assembly - (Figure 19) - To remove the latch lever and bail assembly as a unit, proceed as follows:

1. Remove the punch shaft and cam assembly, as explained in steps 1, 2, and 3 on Page

2. Remove the nylon contact operator from the punch lock contact. Unhook the latch restoring bail spring (379a) from the spring post. Remove the Tru-Arc retainer and remove the latch lock bail (357) from shaft (356).

3. Remove two screws and remove the guide and bracket (341).

4. Slide the latch levers (342) off shaft (343) (the springs (346) are still attached to the levers and the bracket (348).

5. Slide the restoring bail (379) off shaft 343.

To assemble the latch lever and bail assembly and make the necessary adjustments, proceed in the reverse of disassembly.

Tape Feed Mechanism (Figure 20) - If it is necessary to remove the tape feed mechanism, proceed as follows:

1. Remove one screw and remove plastic cover.

2. Remove the top cover.

3. Loosen the set screws and remove the feed shaft knob.

4. Unhook springs (328) from the front guide comb (329).

5. Remove two mounting screws and remove the front guide comb (329).

6. Remove four mounting screws and remove the outside casting.

7. Remove one screw and remove the chad chute (321B).

8. Unhook the detent arm spring (377) from the detent arm (373).

9. Pull the tape hold down arm back and carefully remove the tape feed shaft assembly, this assembly includes the pinwheel (331) and the ratchet wheel (372).

10. Remove the locking nut and remove the eccentric stud (374) and the detent arm (373).

11. Unhook spring (371) from the feed lever arm.

12. Remove the locking nut and remove the eccentric stud (366) and feed lever arm (364).

To assemble and adjust the tape feed mechanism, proceed as follows:

1. Assemble the tape feed parts in the reverse manner of disassembly. When replacing the outside casting, be sure there

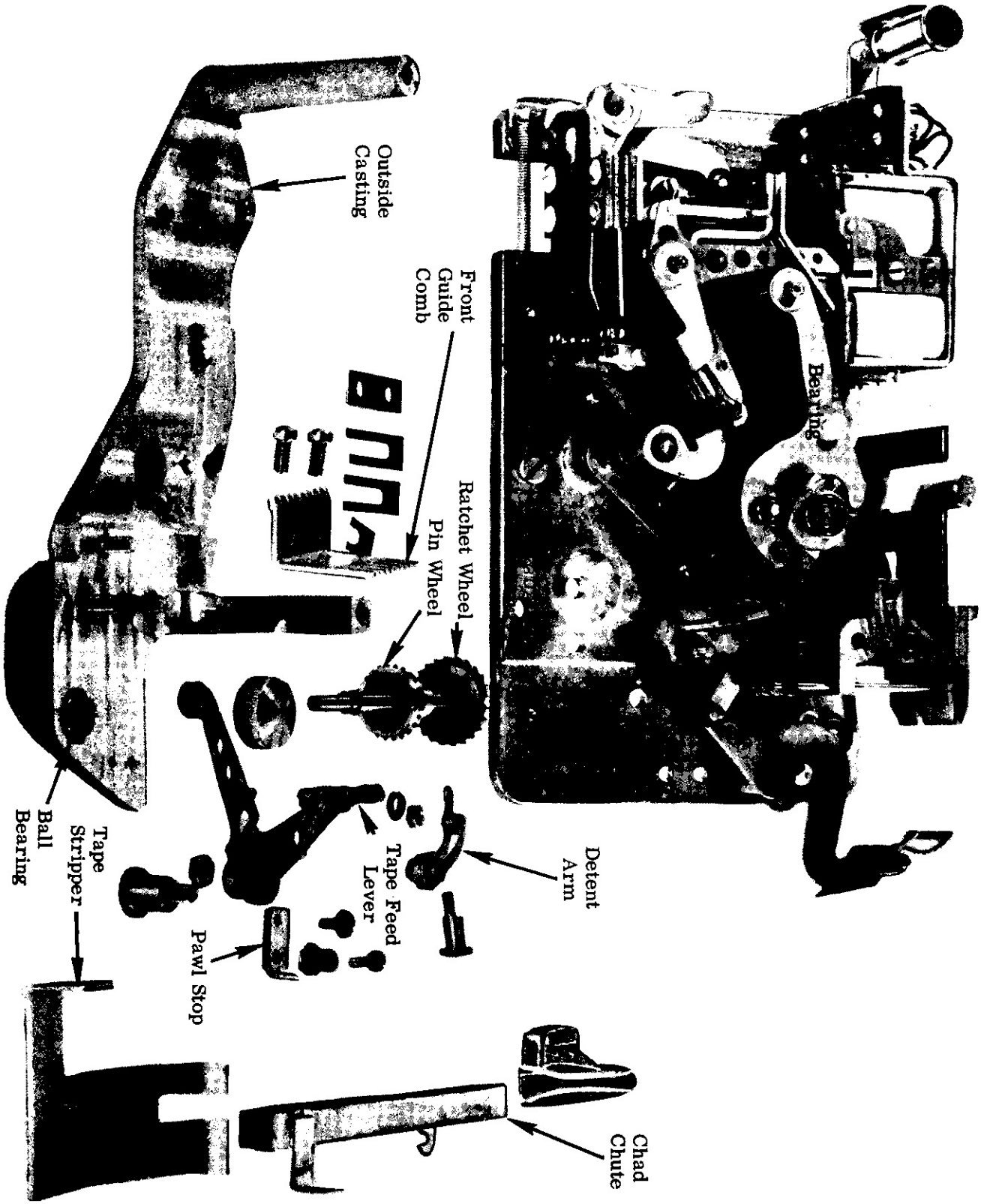

Figure 20 - Removal of Tape Feed Mechanism

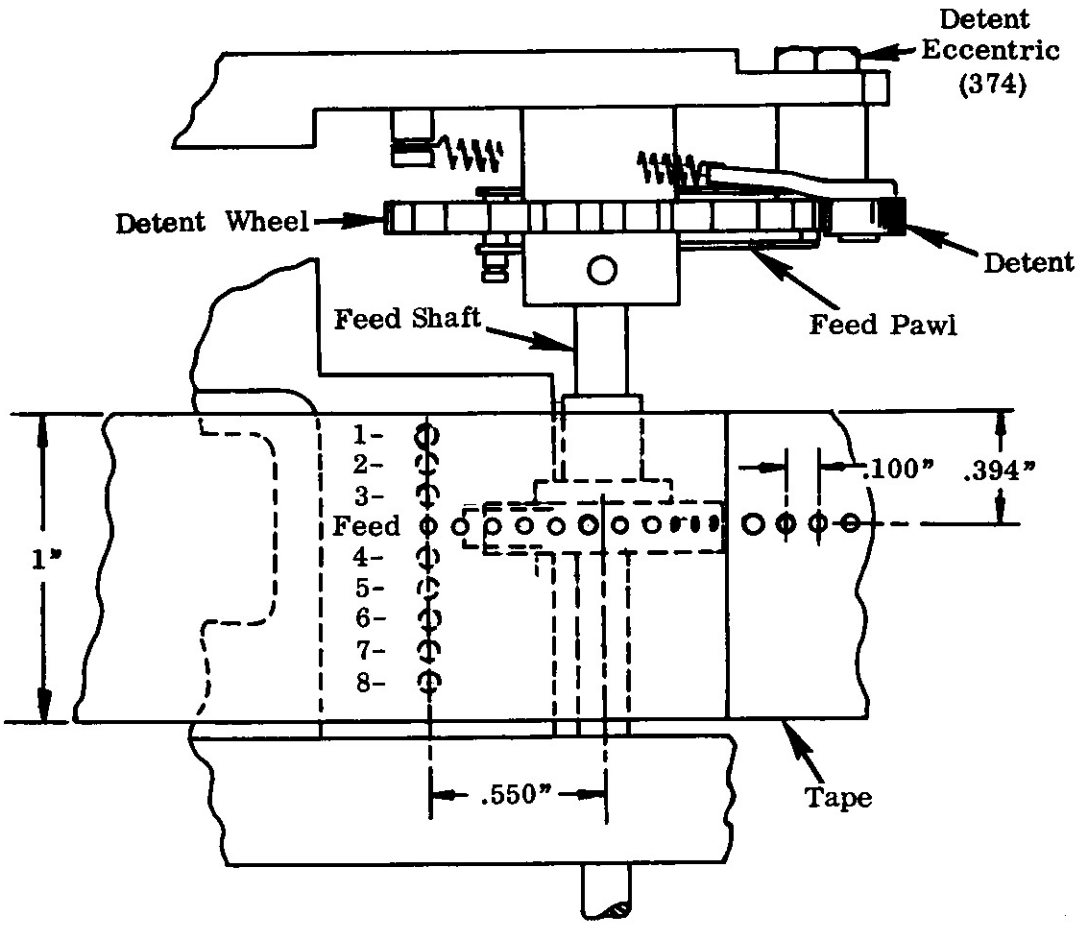

Figure 21 - Tape Registration

are no binds in the feed shaft.

2. When the front guide comb (329) is reassembled, check the adjustment of the comb to see that the punch levers properly engage the punch pins. Also, when the punches are withdrawn from the die, the rear ends of the punch levers should not be able to move upwardly far enough to prevent latching. (Use shims for this adjustment.)

3. Make a preliminary adjustment of the eccentric stud (366) so that the feed pawl will engage the feed ratchet and rotate the feed shaft without causing a bind in the punch shaft (315).

4. Mount the Punch Unit to the main frame.

5. Feed out a length of tape (approximately one foot) and, using gage ~~T41011~~ T1811B, check the registration of the tape. The registration should be .100" tape feed or 60 feed holes in 6.000" $\pm$ .005". (See Figure 21) To obtain the proper registration, loosen the lock nut and adjust the detent arm eccentric stud (374). The tape support plate should be adjusted so that the center line of the feed hole will be approximately .394" from the inside edge of the tape (edge nearest number five code hole on 11/16" wide tape, #1 hole

on 1" wide tape). This can be checked on the T18118 gage.

Note: Check the position of the tape stripper plate to be sure that the curved portion of the plate aligns with the curvature of the pin wheel hub.

It may also be necessary to reform the tape hold down arm to provide equal pressure across the tape.

6. Adjust the eccentric stud (366) on the feed lever (364) so that feed pawl moves detent wheel within less than .010" of detented position. The extent of feed motion should never be beyond detented position.

7. With the feed roller (on feed lever) on the high point of the feed cam, adjust the feed pawl stop to stop the motion of the feed pawl, without choking off, just as soon as the detent roller is fully seated between two teeth of the ratchet wheel.

Punch Clutch Mechanism - To remove the punch clutch parts, proceed as follows: (Refer to Figure 3.)

1. Loosen two set screws on detent (294) and remove.

2. Loosen two set screws and remove the collar (297), spring (301), sleeve (302) and K. O. cam (297A).

3. Remove two mounting screws and remove the complete clutch magnet and armature assembly.

To assemble the punch clutch parts,

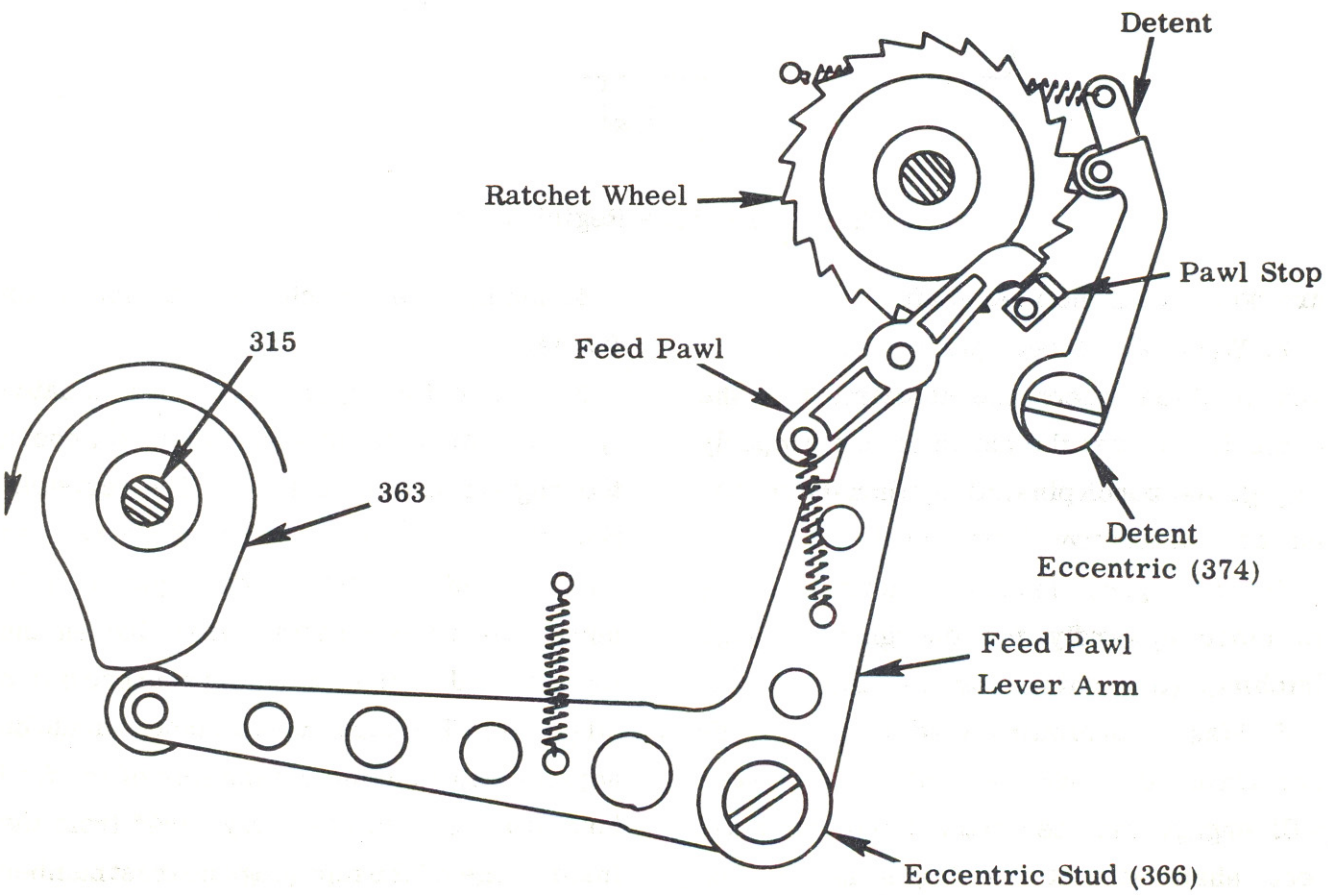

Figure 22 - Adjustment of Tape Feed Mechanism

proceed as follows:

1. Hold the clutch spring (301) in the left hand with the right angle bend toward you.

2. With the clutch collar (297) in the right hand, start the bend of the spring in the slot of the collar. Turn the collar slightly, tending to unwind the spring. At the same time, exert pressure with the left hand so that the first turn or two of the spring will slide over the collar. (It is important not to turn the collar too much, as this will cause the spring to be twisted out of shape.)

3. Hold the collar, with the spring attached, in the right fingers. Pick up the K. O. cam (297A) with the left fingers and slide over the spring and collar being sure to have the cut out portions to the left (be sure and place the K.O. cam in position so that the high lobe is at the beginning of the shaft rotation). Pick up the sleeve (302) in the left fingers with the inside lug on the left.

Insert the end of the spring and turn the collar counter-clockwise (viewed from sleeve end) until the sleeve rides into position on the collar. Twist the assembly so the end opposite the collar may be viewed and continue to turn the collar counter-clockwise until the end of the spring drops into its slot.

4. Hold the sleeve firmly with the left fingers and move the collar clockwise with the fingers of the right hand. Let the fingers of the right hand ride over and grip the sleeve so that it will not slip.

5. Holding the sleeve and collar in the above position, carefully slide it onto the drive shaft until the sleeve slides into place.

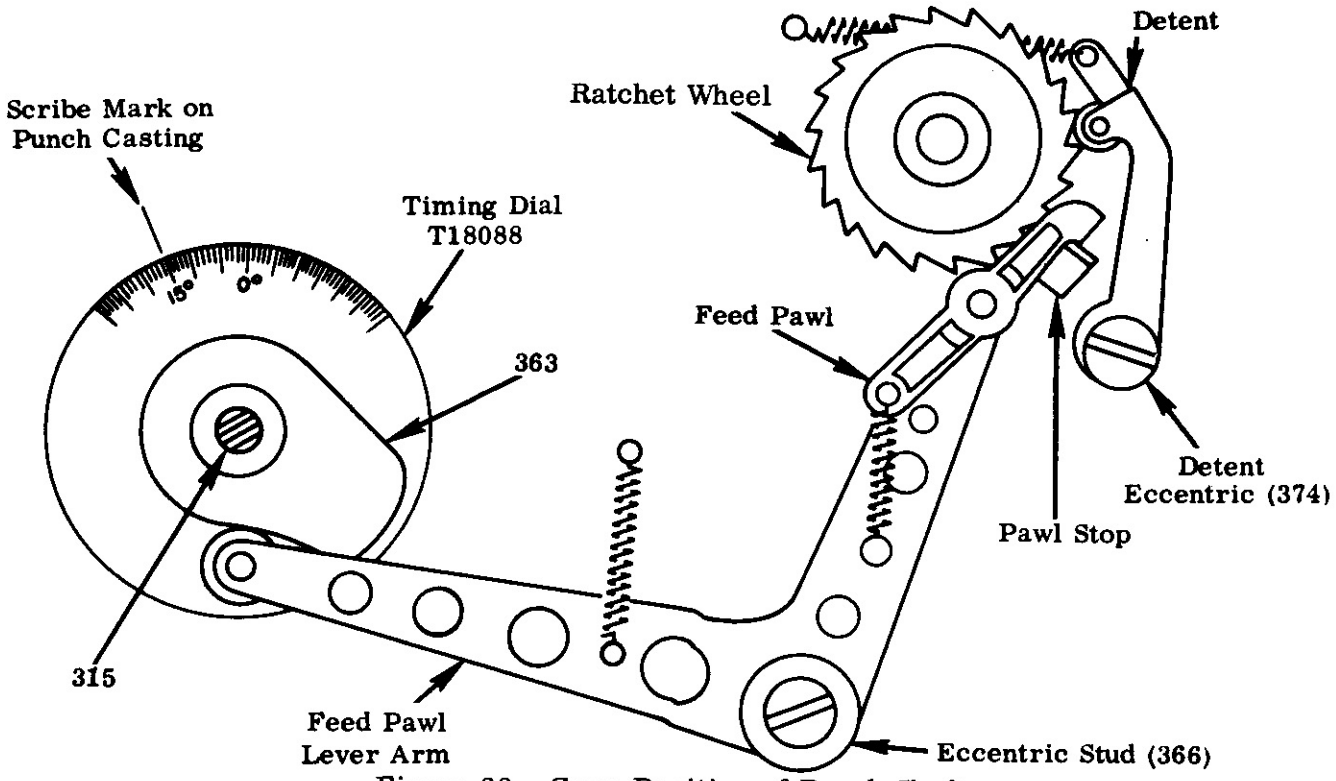

Figure 23 - Zero Position of Punch Shaft

6. Slide the clutch detent (294) onto the drive shaft.

7. Assemble the clutch magnet and armature assembly with two mounting screws.

To adjust the complete clutch mechanism, proceed as follows:

1. Turn the punch shaft (315) until the roller of the feed pawl lever arm (364) is 15 degrees plus or minus one degree past the point where the feed roller first engages the low dwell of the feed cam. This adjustment may also be obtained by setting the clutch detent cam .125" plus or minus .010" short of latching at the point where the feed lever roller first engages the low dwell of the feed cam (See Figure 23). Before tightening the detent cam set screws, be sure there is approximately .001" to .003" end clearance on the clutch drive shaft. (Figure 25)

2. Loosen the two mounting screws and position the clutch magnet yoke on the punch casting so that the tip of the clutch armature, when in the attracted position, clears the high point of the clutch sleeve (302) by approximately .005" to .007". (Figure 24A) Also, when the armature knockoff roller is on the ~~high~~ low dwell of the cam there should be .005" to .010" gap between the knockoff and the armature. (Figure 24b)

3. Turn the punch shaft (315) until the detent (294) is approximately 1/32" (.016") short of latching the tip of the detent arm. Hold the detent and shaft in this position and turn the sleeve (302) until it latches with the tip of the clutch armature. Tighten the two collar set screws, being sure to retain the normal free relation between the gear hub and the clutch sleeve. (Figure 25)

4. Adjust the knockoff cam so that the clutch will not overtravel more than 4 1/2 degrees plus or minus one degree from the latch point, or, 1/64" to 1/32" overthrow

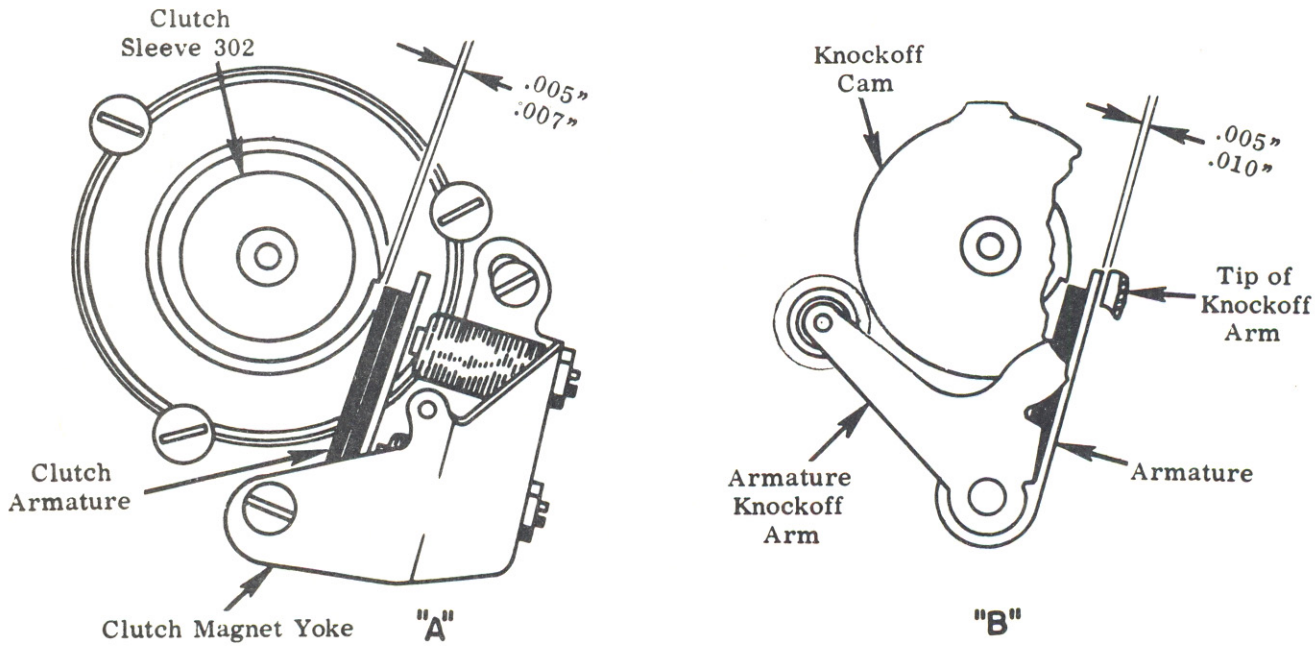

Figure 24 - Clutch Magnet Yoke Adjustment

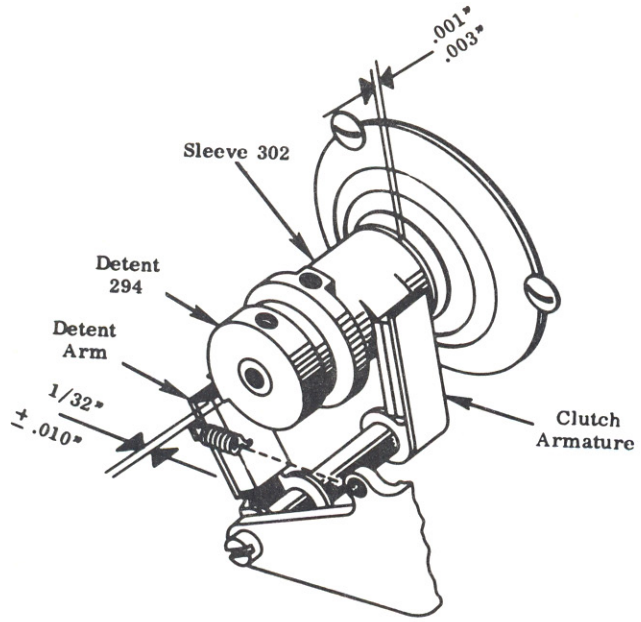

Figure 25 - Clutch Adjustment

as measured between the detent cam and detent arm.

CLUTCH SHAFT - To remove the clutch shaft (315a), proceed as follows:

1. Remove the tape punch cover and remove the tape punch from the casting.

2. Loosen the clutch shaft collar (315b) set screws. Also, loosen the drive belt pulley (315c) set screw. (If cams are located on the shaft, loosen the cam set screws.) Remove the drive belt (315d) from the clutch pulley. (See Figure 26)

Note: To remove tension on the drive belt, loosen the motor mounting screws & slide the motor toward the clutch shaft.

3. Remove two screws and remove the clutch magnet assembly.

4. Loosen the clutch detent set screws and pull the clutch shaft out of the casting from the punch end.

To assemble and adjust the clutch shaft, proceed as follows:

1. Assemble the clutch shaft (315a) in

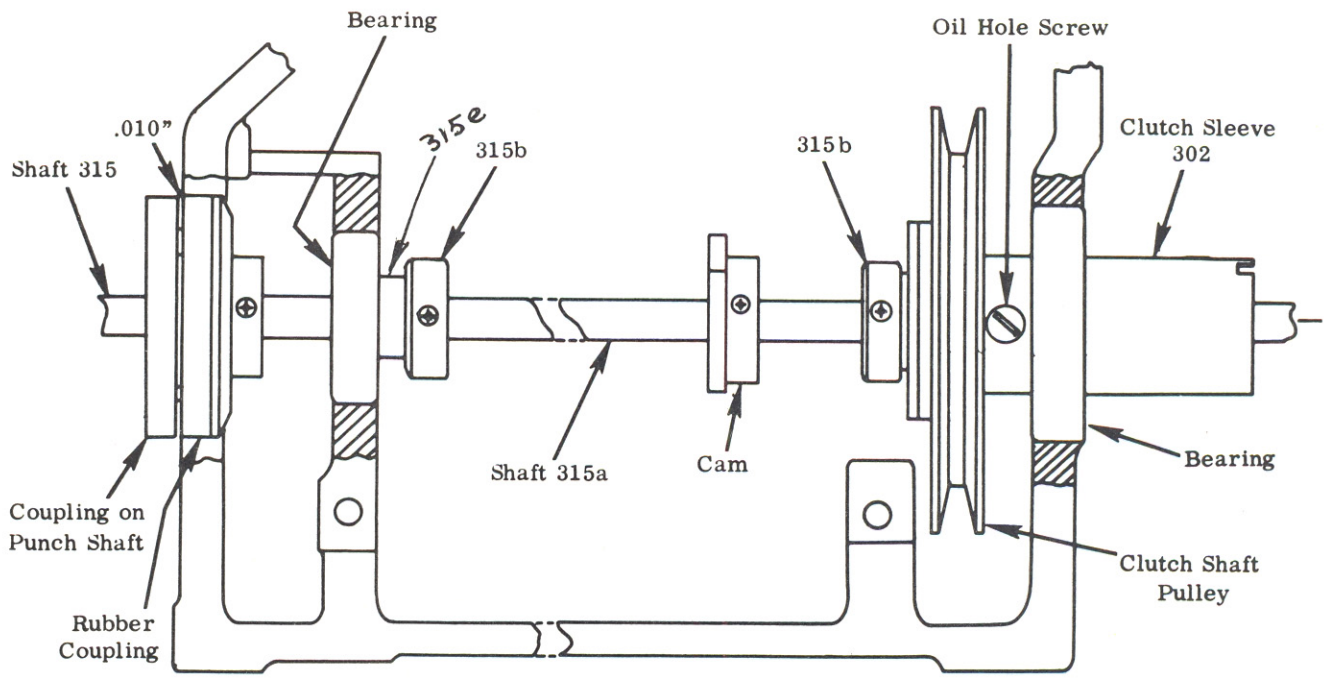

Figure 26 - Main Drive Shaft Adjustment

the casting being sure to place on the shaft the collars (315b) and spacer (315e) (plus, any necessary cams). Also, check to see that the drive belt (315d) is in place.

2. Mount the tape punch to the casting. Slide the shaft so that the rubber coupling engages the pins on the punch coupling. Place a .010" shim stock or gage between the couplings and tighten the collar set screw. (Figure 26).

3. Push the clutch pulley in against the bearing until bearing rests against the three stop screws. Place the collar (315b) against the pulley bearing and tighten the collar set screw being sure to maintain .001" to .003" end play in shaft.

4. Reset tension of drive belt by moving motor & tightening mounting screws.

5. See Assembly and Adjustment procedure of Punch Clutch Mechanism on Page

Clutch Pulley

If it is necessary to remove the clutch pulley, (315c) proceed as follows:

1. Remove the clutch shaft.

2. Remove two screws and remove the clutch magnet assembly.

3. Remove three bearing screws and remove the bearing.

4. Remove the clutch pulley.

To assemble and adjust after replacing the clutch pulley refer to assembly and adjustments of clutch shaft.

Tape Rewind

(Optional Equipment) (Figure 27)

The tape rewind assembly is optional equipment and is convenient where long lengths of tape are required.

The rewind assembly is mounted to the Motorized Punch and adjusted at the Factory. However, for convenience and protection during shipping, the rewind is disassembled and packaged separately.

Three mounting screws are provided on the base of the machine, each having an extra nut for rewind mounting. The spring belt (315f) is placed over the clutch shaft (a groove is provided on the shaft in later model machines) and the rewind pulley.

The tape is attached to spring clips on the inside flange, which is rotated by pressure of a spider spring (315g) against the face of the flange. The tension of the spider spring (315g) is adjusted by loosening the set screw and moving the collar (315h) in or out. It is very important to have as light a tension as possible on the flange. If the tension is too great, there will be too much pull on the tape causing misregistration.

Auxiliary Contacts and Cams

A maximum of ten cam operated contacts may be provided which are individually controlled by cams located on the clutch shaft. The contacts may be either the normally open (A) or the transfer (C) type.

The cams are adjustable to any radial position on the clutch shaft. Also, the cams are available with variations in the high and low dwells (controlling degrees at which contact will open and close). The high dwell on all cams is 32 degrees less than the

number of degrees the contacts are closed. For example, if a cam has a 50 degrees contact closed surface, the high dwell will be only 18 degrees.

Removal, Assembly and Adjustment - If it is necessary to remove and replace a cam it will be necessary to remove the clutch shaft (315a). Refer to removal of clutch shaft on Page

When assembling cams on the shaft the collar of the cam should be facing toward the clutch end of the shaft.

Adjusting the Contact to the Cam - It is necessary to attach timing dial T18088 to the end of the punch shaft (315) and adjust the dial to zero with the clutch shaft in the home position (clutch latched).

For an example adjustment of a contact

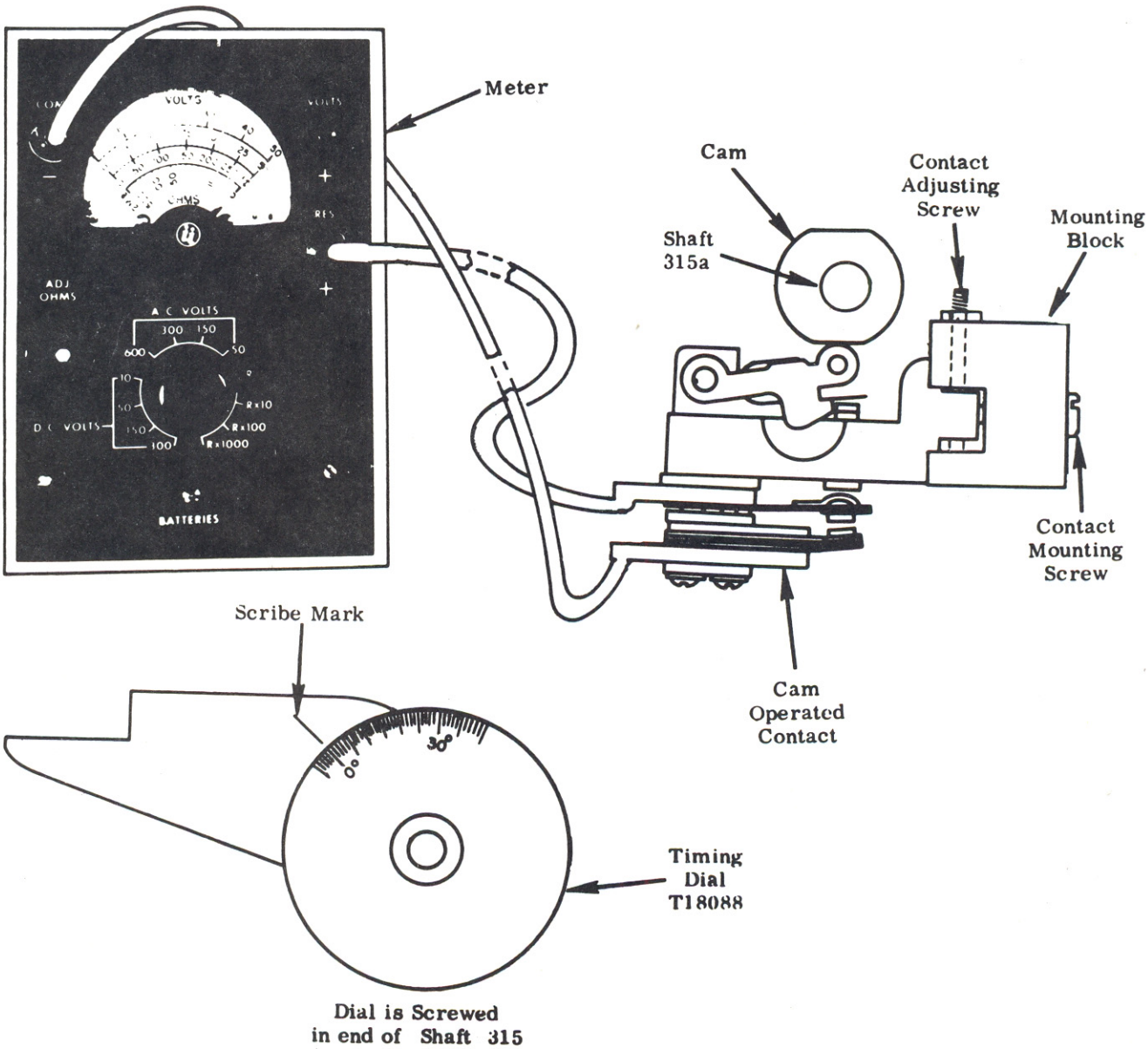

Figure 28 - Cam Contact Adjustment

to a cam, assume that the contact make time is 130 degrees duration and its break time is 230 degrees duration.

It is necessary to adjust the contact vertically in its mounting block to obtain the 130 degrees make duration of the contact. This is accomplished by connecting the leads of an ohmmeter across the contact points. Turn the clutch shaft and check the amount of time the contact remains closed (full deflection of the meter needle). It should be 130 degrees.

If the contact remains closed less than 130 degrees, move the contact up. (Loosen the contact mounting screw and turn counterclockwise on the adjusting screw.) Tighten locknut and mounting screw and recheck make duration.

If the contact remains closed more than 130 degrees, move the contact down. (Loosen the contact mounting screw and turn clockwise on adjusting screw.) Tighten locknut and mounting screw and recheck make duration. (See Figure 28)

Adjusting the Cam Position on Shaft - For an example setting, assume that the contact is to make at 250 degrees and break at 20 degrees rotation of the clutch shaft.

To set the cam on the shaft correctly, proceed as follows:

1. Connect the meter leads across the contact.

2. Turn the clutch shaft to the home position (clutch latched) and be sure the timing dial is set at zero.

3. Release the clutch and rotate the shaft until the dial reads 20 degrees. Loosen the cam set screw and rotate the cam in the same direction of shaft rotation until the contact breaks (roller will be 16 degrees beyond high dwell of cam). Tighten the cam set screw and rotate the shaft to 250 degrees to see that the contact makes.

MOTORIZED TAPE PUNCH

LUBRICATION

The lubrication points for the various components in the Motorized Tape Punch are shown on figure 30 through 36.

The following points should be lubricated with CCC lubricant number 10: All latching surfaces, on armatures where knock-off bails contact, detent, cam surfaces, drive gear teeth, clutch sleeve and collar surfaces, (where armatures contact), restoring bail and spring ends.

The cam roller bearings should be lubricated with CCC lubricant number 1 and then follwed by CC lubricant number 10.

All other moving parts, pivots or bearings not otherwise shown should be lubricated with CC lubricant number 1.

The numbers in each figure indicate the type of lubricant to use at a specific point. These numbers and their associated lubricants are listed below.

NOTE: On Bell & Howell equipment having aluminum cams, the cam surfaces should be greased lightly with the CCC 20 lubricant. The plastic or nylon cams (blue or white), when used, need no lubricant on this surface.

CC LUBRICANT NUMBER	GENERAL DESCRIPTION	APPROVED SOURCE	LUBRICANT'S NAME
1	A light oil which has good lubricating and rust preventing properties.	Shell Oil Co.	Shell Tellus Number 27
6 or 10	A grease of light consistency which contains oxidation resistant additives and provides good lubrication without excessive channeling.	Shell Oil Co.	Alvania #2
2	For all porous metal bearings (oil).	Socony Vacuum Gargoyle	DTE 797
8	Pivot pins and bearings (oil).	A.T.Supply Co.	Molub Alloy SM oil #0
20	Silicone Grease	General Electric	Versilube G-300

This page rev'd.6-12-63

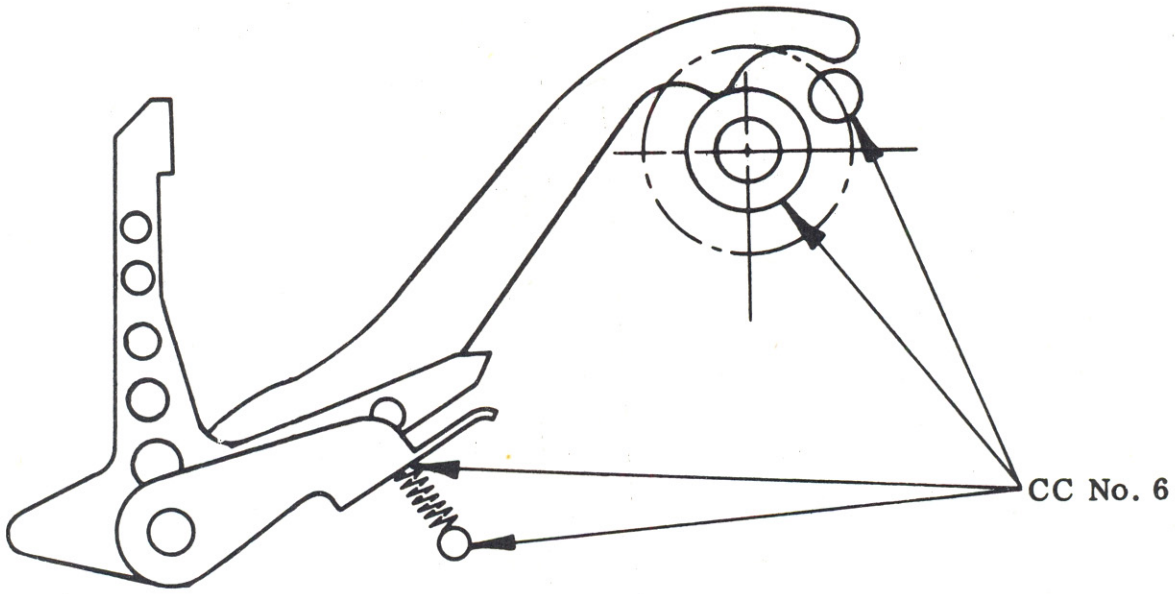

Figure 30 - Latch Restoring Mechanism

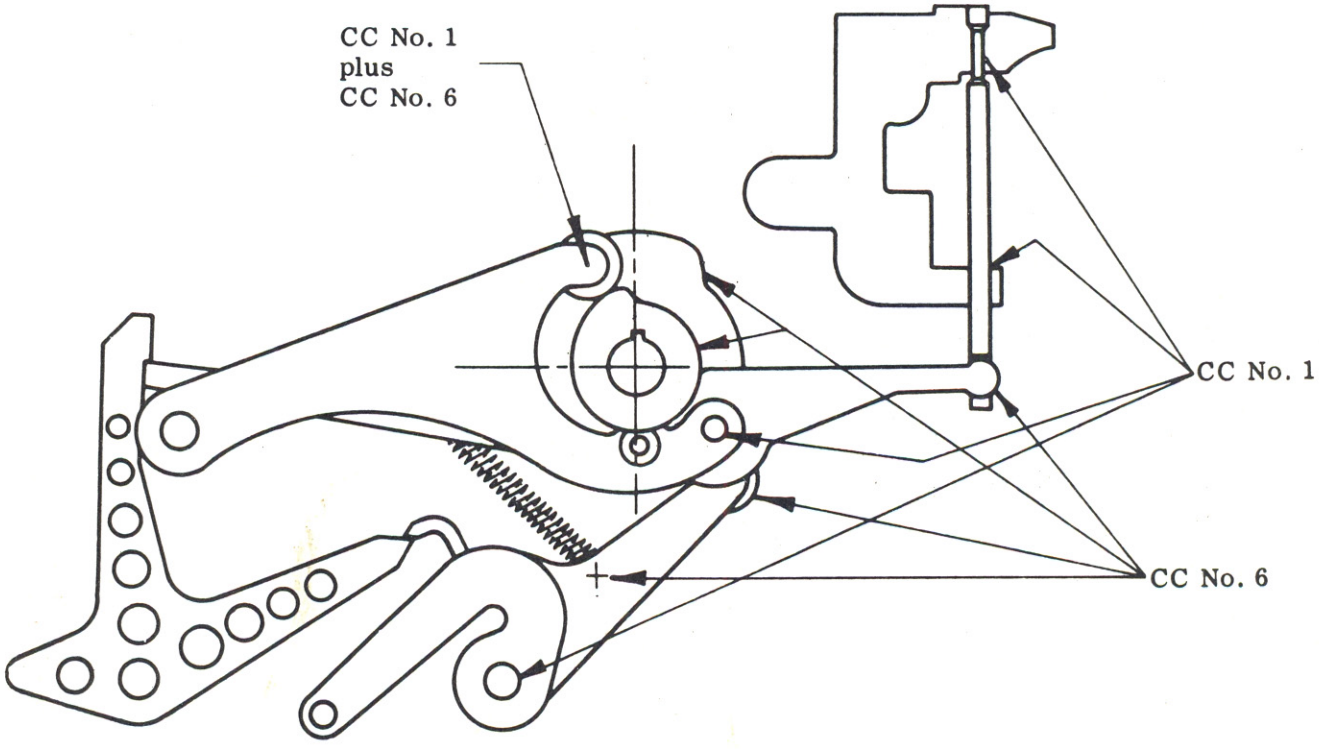

Figure 31 - Latches, Operating Levers and Punch Pins

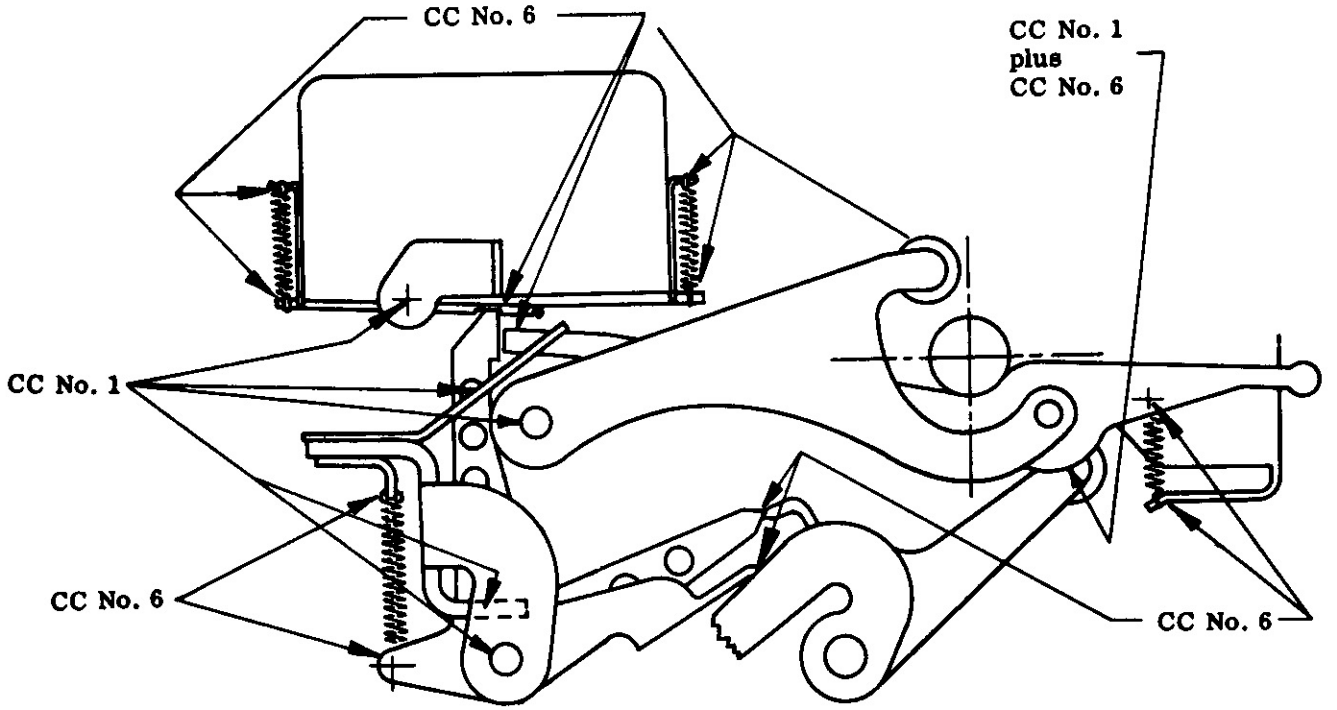

Figure 32 - Armature, Latches and Operating Levers

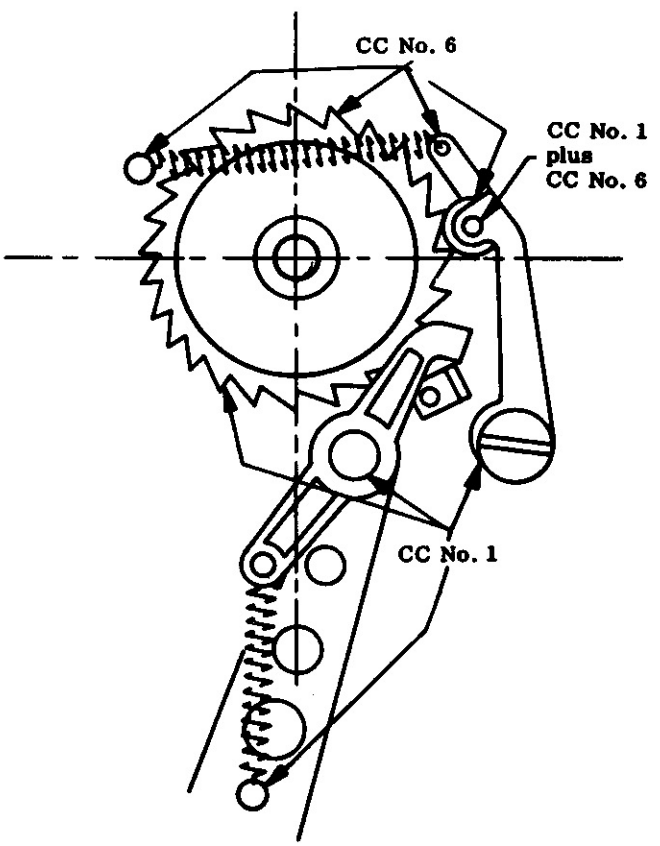

Figure 33 - Feed Mechanism

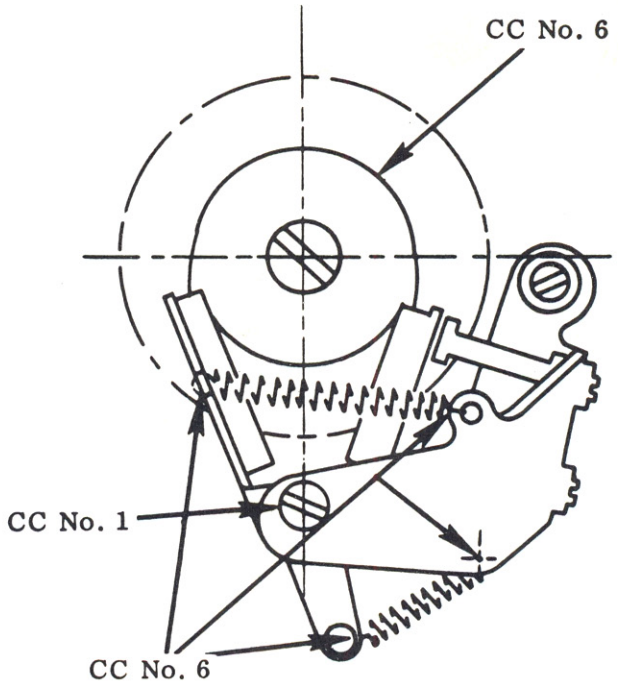

Figure 34 - Clutch Mechanism

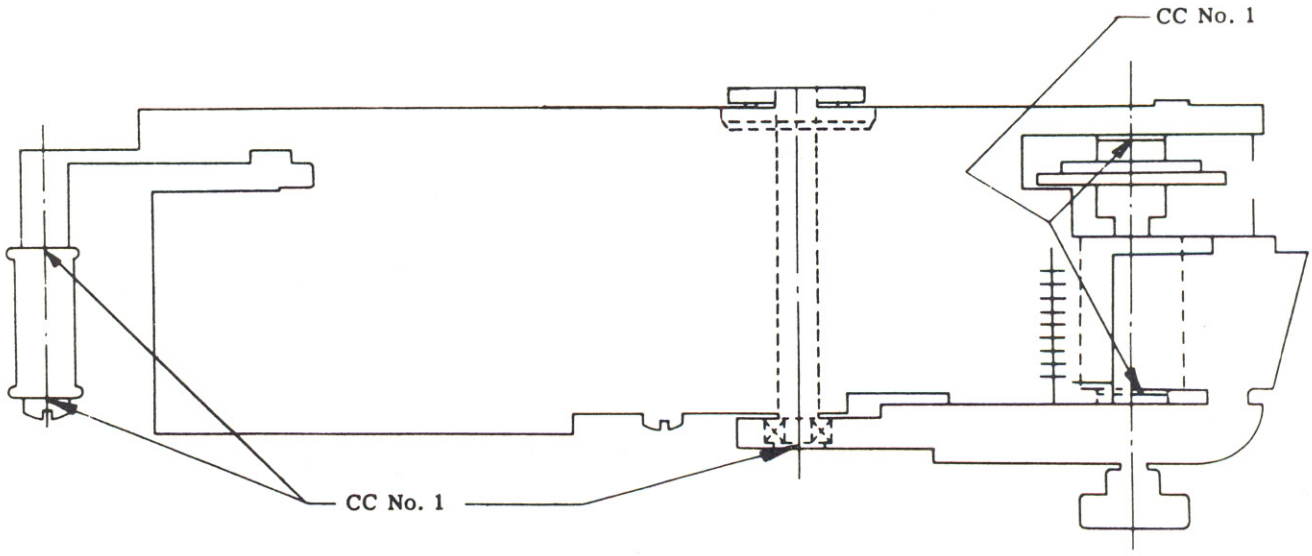

Figure 35 - Tape Punch (Top)

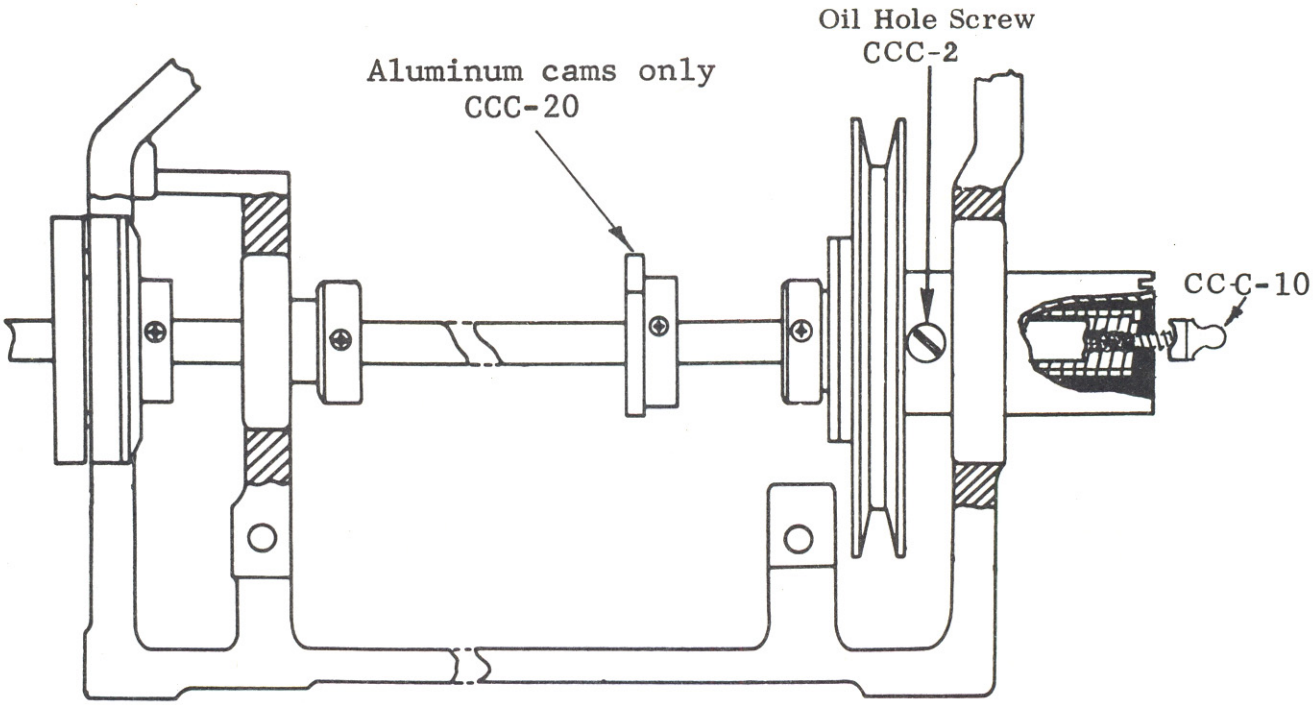

Figure 36 - Power Frame

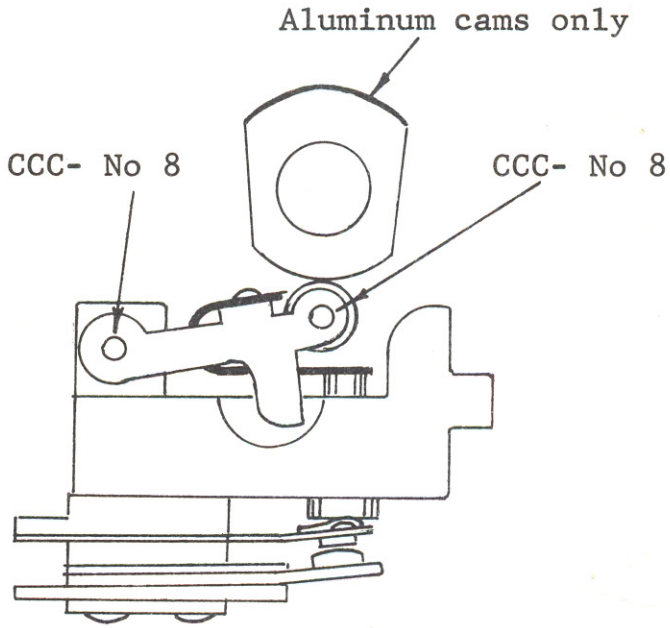

Fig. 36a - Cam Switch & Cam

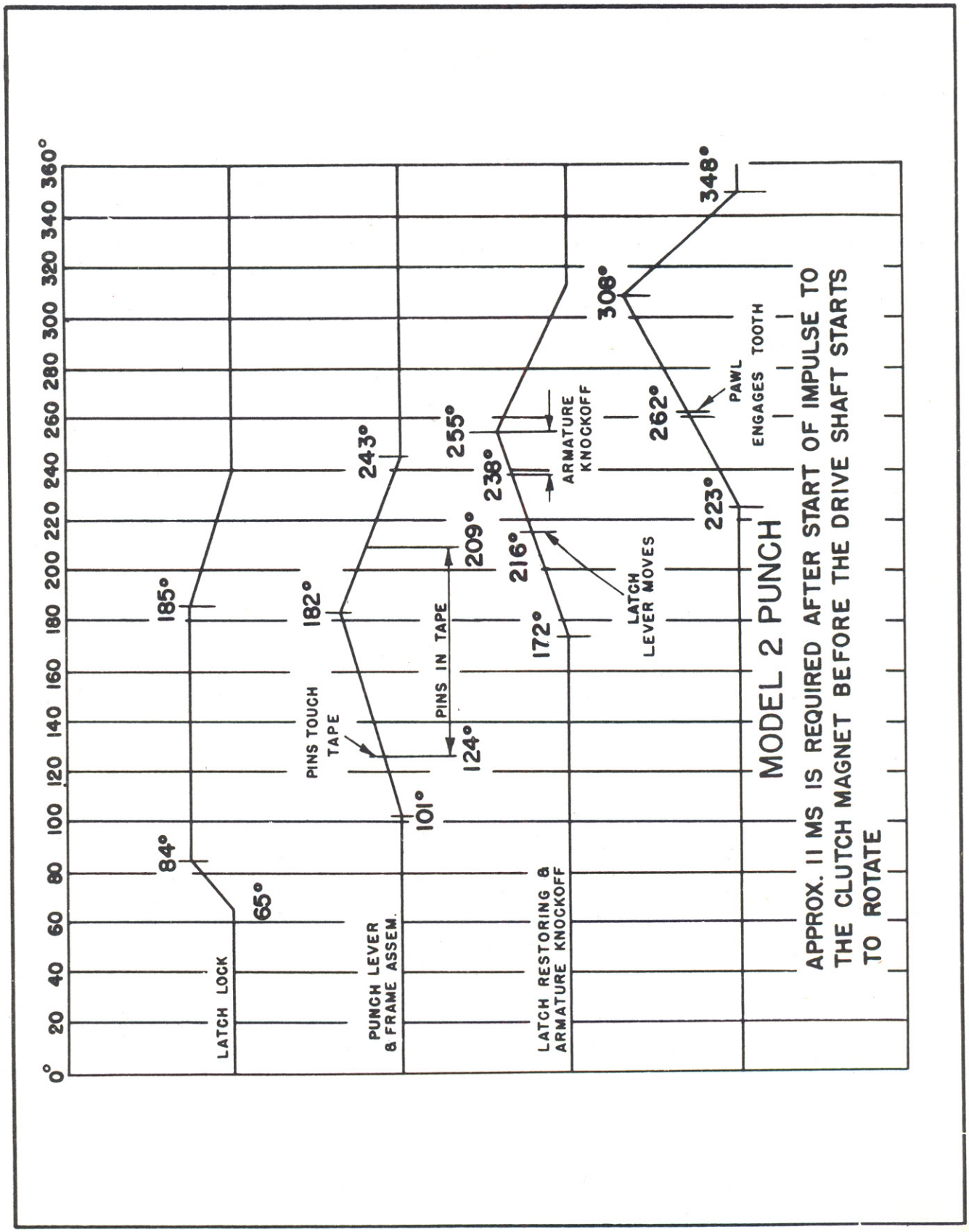

Figure 37 - Timing Chart